58MEB
Deluxe 4–Way Multipoise Fixed–Capacity Condensing Gas Furnace

Carrier®
Turn to the Experts.℠

Service and Maintenance Instructions For Sizes 040–120, Series 100

NOTE: Read the entire instruction manual before starting the installation.

TABLE OF CONTENTS

PAGE

SAFETY CONSIDERATIONS 1
GENERAL 2
ELECTROSTATIC DISCHARGE (ESD) PRECAUTIONS . . . 2
CARE AND MAINTENANCE 3
Cleaning and/or Replacing Air Filter 3
Blower Motor and Wheel Maintenance 4
Cleaning Burners 6
Cleaning Heat Exchangers 7
Primary Heat Exchangers 7
Secondary Heat Exchangers 8
Flushing Collector Box and Drainage System 8
Servicing Hot Surface Igniter 9
Electrical Controls and Wiring 11
Checking Heat Tape Operation (If Applicable) 11
Winterizing 12
WIRING DIAGRAM 13
TROUBLESHOOTING 13
Status Codes 13
Component Tests 13

⚠ WARNING

ELECTRICAL SHOCK, FIRE, OR EXPLOSION HAZARD

Failure to follow safety warnings could result in personal injury, death, or property damage.

- Before servicing, disconnect all electrical power to furnace.
- When servicing controls, label all wires prior to disconnecting. Reconnect wires correctly.
- Verify proper operation after servicing.

SAFETY CONSIDERATIONS

Recognize safety information. This is the safety-alert symbol ⚠. When you see this symbol on the furnace and in instructions or manuals, be alert to the potential for personal injury.

Understand the signal words DANGER, WARNING, and CAUTION. These words are used with the safety-alert symbol. DANGER identifies the most serious hazards which **will** result in severe personal injury or death. WARNING signifies a hazard which **could** result in personal injury or death. CAUTION is used to identify unsafe practices which **may** result in minor personal injury or product and property damage. NOTE is used to highlight suggestions which **will** result in enhanced installation, reliability, or operation.

Installing and servicing heating equipment can be hazardous due to gas and electrical components. Only trained and qualified service agency personnel should install, repair, or service heating equipment.

⚠ WARNING

ELECTRICAL SHOCK, FIRE, OR EXPLOSION HAZARD

Failure to follow this warning could result in personal injury, death or property damage.

The ability to properly perform maintenance on this equipment requires certain expertise, mechanical skills, tools, and equipment. If you do not possess these, do not attempt to perform any maintenance on this equipment other than those procedures recommended in the User's Manual.

⚠ WARNING

FIRE OR EXPLOSION HAZARD

Failure to follow this warning could property damage, personal injury, or death.

Never store anything on, near, or in contact with the furnace, such as:

1. Spray or aerosol cans, rags, brooms, dust mops, vacuum cleaners, or other cleaning tools.
2. Soap powders, bleaches, waxes or other cleaning compounds, plastic or plastic containers, gasoline, kerosene, cigarette lighter fluid, dry cleaning fluids, or other volatile fluids.
3. Paint thinners and other painting compounds, paper bags, or other paper products.

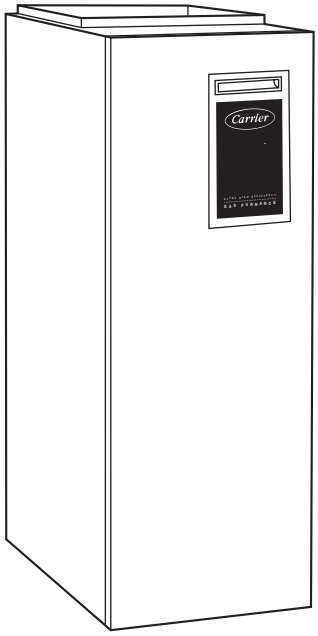

A05079

Fig. 1 - Furnace in Upflow Orientation

Installing and servicing heating equipment can be hazardous due to gas and electrical components. **Only trained and qualified service agency personnel should install, repair, or service heating equipment. Untrained personnel can perform basic maintenance functions described in User's Information Manual such as cleaning and replacing air filters.** All other operations must be performed by trained service personnel. When working on heating equipment, observe precautions in the literature, on tags, and on labels attached to or shipped with the unit and other safety precautions that may apply.

Follow all safety codes including the National Fuel Gas Code (NFGC) NFPA 54-2006/ANSI Z223.1-2006 in the USA, CSA B149.1-05 National Standard of Canada, Natural Gas and Propane Installation Codes (NSCNGPIC) in Canada, and the Installation Standards, Warm Air Heating and Air Conditioning Systems (NFPA 90B) ANSI/NFPA 90B. Wear safety glasses and work gloves. Have a fire extinguisher available during start-up and adjustment procedures and service calls.

⚠ CAUTION

UNIT DAMAGE HAZARD

Failure to follow this caution may result in damage to furnace.

Label all wires prior to disconnection when servicing controls. Wiring errors can cause improper and dangerous operation.

GENERAL

This furnace can be installed as a direct vent (2-pipe) or non-direct vent (1-pipe) condensing gas furnace. These instructions are written as if the furnace is installed in an upflow application. An upflow furnace application is where the blower is located below the combustion and controls section of the furnace, and conditioned air is discharged upward. Since this furnace can be installed in any of the 4 positions shown in Fig. 2, you may need to revise your orientation to component location accordingly.

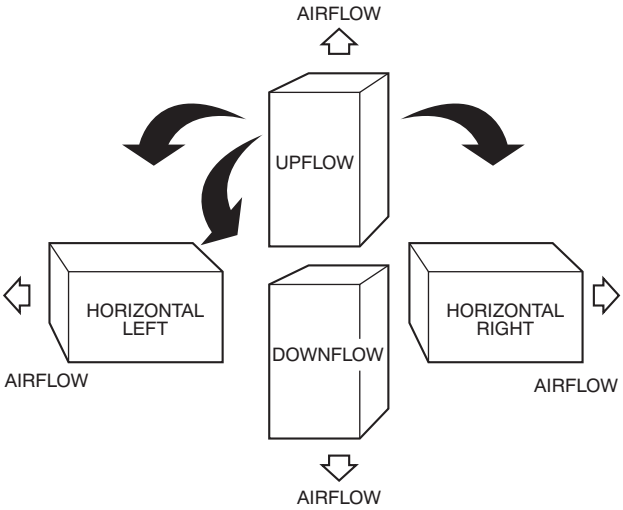

A93041

Fig. 2 - Multipoise Orientation

ELECTROSTATIC DISCHARGE (ESD) PRECAUTIONS

⚠ CAUTION

UNIT DAMAGE HAZARD

Failure to follow this caution may damage furnace components.

Electrostatic discharge can affect electronic components. Take precautions during furnace installation and servicing to protect the furnace electronic control. Precautions will prevent electrostatic discharges from personnel and hand tools which are held during the procedure. These precautions will help to avoid exposing the control to electrostatic discharge by putting the furnace, the control, and the person at the same electrostatic potential.

1. Disconnect all power to the furnace. DO NOT TOUCH THE CONTROL OR ANY WIRE CONNECTED TO THE CONTROL PRIOR TO DISCHARGING YOUR BODY'S ELECTROSTATIC CHARGE TO GROUND.
2. Firmly touch a clean, unpainted, metal surface of the furnace chassis which is close to the control. Tools held in a person's hand during grounding will be satisfactorily discharged.
3. After touching the chassis, you may proceed to service the control or connecting wires as long as you do nothing that recharges your body with static electricity (for example; DO NOT move or shuffle your feet, DO NOT touch ungrounded objects, etc.).
4. If you touch ungrounded objects (recharge your body with static electricity), firmly touch furnace again before touching control or wires.
5. Use this procedure for installed and uninstalled (ungrounded) furnaces.
6. Before removing a new control from its container, discharge your body's electrostatic charge to ground to protect the control from damage. If the control is to be installed in a furnace, follow items 1 through 5 before bringing the control or yourself into contact with the furnace. Put all used AND new controls into containers before touching ungrounded objects.
7. An ESD service kit (available from commercial sources) may also be used to prevent ESD damage.

CARE AND MAINTENANCE

For continuing high performance and to minimize possible furnace failure, it is essential that maintenance be performed annually. Consult your local dealer for maintenance and maintenance contract availability.

⚠ WARNING

ELECTRICAL SHOCK EXPLOSION HAZARD

Failure to follow this warning could result in personal injury, death or property damage.

Turn off the gas and electrical supplies to the unit before performing any maintenance or service. Follow the operating instructions on the label attached to the furnace.

The minimum maintenance that should be performed on this equipment is as follows:

1. Check and clean or replace air filter each month as needed.
2. Check blower motor and wheel for cleanliness annually.
3. Check electrical connections for tightness and controls for proper operation each heating season. Service as necessary.
4. Check for proper condensate drainage. Clean as necessary.
5. Check for blockages in combustion-air and vent pipes annually.
6. Check burners for cleanliness annually.

⚠ CAUTION

CUT HAZARD

Failure to follow this caution may result in personal injury.

Be careful of sharp metal edges, etc. Use care and wear protective clothing, gloves, and safety glasses when removing parts.

Step 1 — Cleaning and/or Replacing Air Filter

The air filter arrangement may vary depending on the application or orientation.

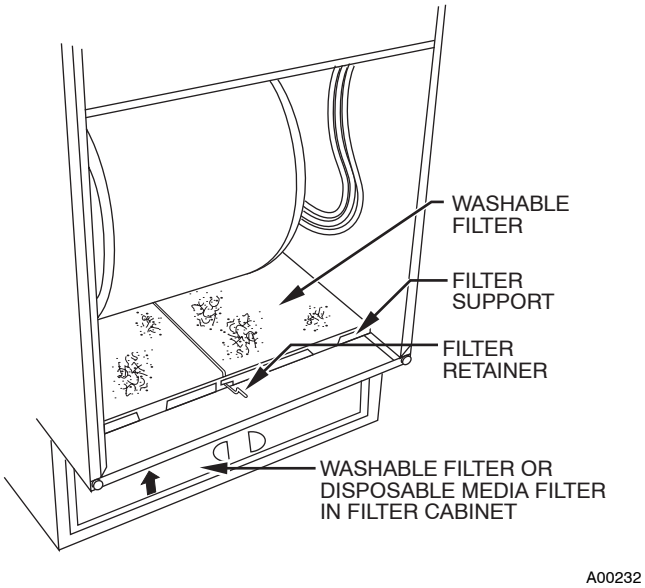

Fig. 3 - Bottom Filter Arrangement

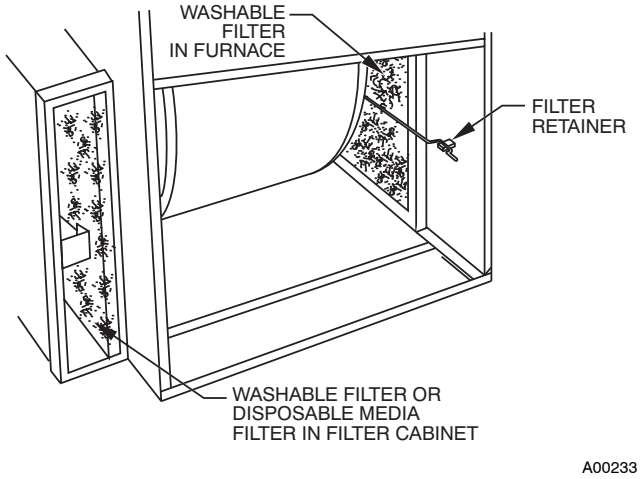

Fig. 4 - Filter Installed for Side Inlet

⚠ WARNING

FIRE, CARBON MONOXIDE POISONING HAZARD

Failure to follow this warning could result in personal injury, death or property damage.

Never operate unit without a filter or with the blower access panel removed. Operating a unit without a filter or with the blower access door removed could cause damage to the furnace blower motor. Dust and lint on internal parts of furnace can cause a loss of efficiency.

NOTE: If the filter has an airflow direction arrow, the arrow must point toward the blower.

To clean or replace filters, proceed as follows:

If filter is installed in filter cabinet adjacent to furnace:

1. Turn off electrical supply to furnace.
2. Remove filter cabinet door.
3. Slide filter out of cabinet. See Fig. 3 or 4.

Table 1 – Furnace Air Filter Table

FURNACE CASING WIDTH IN (MM)	FILTER QUANTITY AND SIZE *		FILTER TYPE*
	SIDE RETURN†* IN (MM)	BOTTOM RETURN* IN (MM)	
17–1/2 (445)	(1) 16 x 25 x 1 † (406 x 635 x 25) †	(1) 16 x 25 x 1 (406 x 635 x 25)	1" (25 mm) thick cleanable
21 (533)	(1) 16 x 25 x 1 (406 x 635 x 25)	(1) 20 x 25 x 1 † (508 x 635 x 25) †	1" (25 mm) thick cleanable
24–1/2 (610)	(1) 16 x 25 x 1 (406 x 635 x 25)	(1) 24 x 25 x 1 † (610 x 635 x 25) †	1" (25 mm) thick cleanable

Table 2 – Air Filter Located in Filter Cabinet

FILTER CABINET HEIGHT – IN (MM)	FILTER SIZE – IN (MM)	FILTER TYPE
16 (406)	(1) 16 x 25 x 1* (406 x 635 x 25) or (1) 16 x 25 x 4–5/16 (406 x 635 x 110)	Cleanable or Disposable
20 (508)	(1) 20 x 25 x 1* (508 x 635 x 25) or (1) 20 x 25 x 4–5/16 (508 x 635 x 110)	Cleanable or Disposable
24 (610)	(1) 24 x 25 x 1*or (610 x 635 x 25) or (1) 24 x 25 x 4–5/16 (610 x 635 x 110)	Cleanable or Disposable

* Filters with a side return-air may have a different filter size. Measure the filter to obtain the correct size.

† Factory-provided with furnace.

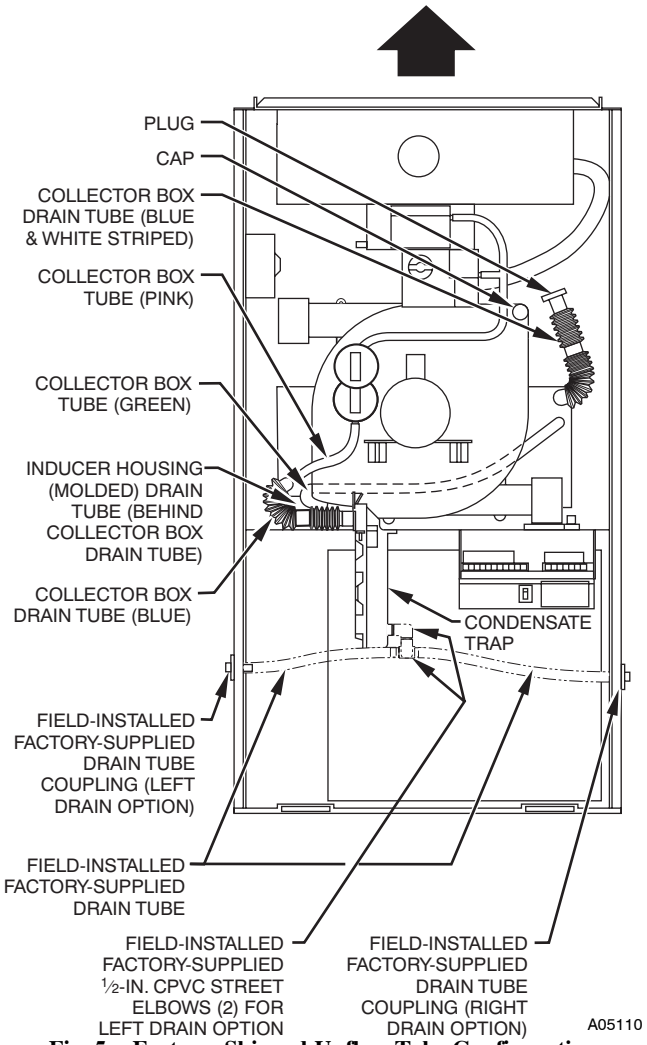

Fig. 5 - Factory-Shipped Upflow Tube Configuration (Shown with Blower Access Panel Removed)

4. If equipped with permanent, washable filter, clean filter by spraying cold tap water through filter in opposite direction of airflow. Rinse filter and let dry. Oiling or coating of the filter is not recommended.
5. If equipped with factory specified disposable media filter, replace only with a factory specified media filter of the same size.
6. Slide filter into cabinet.
7. Replace filter cabinet door.
8. Turn on electrical supply to furnace.

If filter is installed in furnace blower compartment:

1. Turn off electrical supply to furnace.
2. Remove main furnace door and blower access panel.
3. Release filter retainer wire. (See Fig. 3 or 4.)

NOTE: Filters shown in Fig. 3 and 4 can be in furnace blower compartment or in filter cabinet, but not in both.

4. Slide filter out of furnace.
5. Furnaces are equipped with permanent, washable filter(s). Clean filter by spraying cold tap water through filter in opposite direction of airflow.
6. Rinse filter and let dry. Oiling or coating filter is not recommended.
7. Slide filter into furnace.
8. Recapture filter retaining wire.
9. Replace blower access panel and main furnace door.
10. Turn on electrical supply to furnace.

Step 2 — Blower Motor and Wheel Maintenance

To ensure long life, economy, and high efficiency, clean accumulated dirt and grease from blower wheel and motor annually.

The inducer and blower motors are pre-lubricated and require no additional lubrication. These motors can be identified by the absence of oil ports on each end of the motor.

The following items should be performed by a qualified service technician.

Clean blower motor and wheel as follows:

1. Turn off electrical supply to furnace.
2. Remove main furnace door and blower access panel.

3. Disconnect wires
   All factory wires can be left connected, but field thermostat connections may need to be disconnected depending on their length and routing.
4. Position control box, transformer, and door switch assembly to right side of furnace casing.
5. If condensate trap is located in left- or right-hand side of furnace casing, proceed to item 6. Otherwise remove trap and tubing as described below (See Fig. 5.):
   a. Disconnect field drain connection from condensate trap.
   b. Disconnect drain and relief port tubes from condensate trap.
   c. Remove condensate trap from blower shelf.
6. Remove screws securing blower assembly to blower shelf and slide blower assembly out of furnace. Detach ground wire and disconnect blower motor harness plugs from blower motor.

NOTE: Blower wheel is fragile. Use care.

7. Clean blower wheel and motor by using a vacuum with soft brush attachment. Be careful not to disturb balance weights (clips) on blower wheel vanes. Do not bend wheel or blades as balance will be affected.
8. If greasy residue is present on blower wheel, remove wheel from the blower housing and wash it with an appropriate degreaser. To remove wheel:
   a. Mark blower wheel location on shaft before disassembly to ensure proper reassembly.
   b. Loosen setscrew holding blower wheel on motor shaft.

NOTE: Mark blower mounting arms and blower housing so each arm is positioned at the same hole location during reassembly.

   c. Mark blower wheel orientation and cutoff plate location to ensure proper reassembly.
   d. Remove screws securing cutoff plate and remove cutoff plate from housing.
   e. Remove bolts holding motor mounts to blower housing and slide motor and mounts out of housing.
   f. Remove blower wheel from housing.

⚠ CAUTION

UNIT DAMAGE HAZARD

Failure to follow this caution may result in noise or furnace component failure.

The blower wheel should not be dropped or bent as balance will be affected.

   g. Clean wheel per instructions on degreaser cleaner. Do not get degreaser in motor.
9. Reassemble motor and blower wheel by reversing items 8b through 8f. Ensure wheel is positioned for proper rotation.

NOTE: Be sure to attach ground wire and reconnect blower harness plugs to blower motor.

10. Reinstall blower assembly in furnace.
11. Reinstall condensate trap and tubing if previously removed.
    a. Reinstall condensate trap in hole in blower shelf.
    b. Connect condensate trap drain tubes. See Fig. 5 or tubing diagram on main furnace door for proper tube location.

NOTE: Ensure tubes are not kinked or pinched, as this will affect operation.

       (1.) Connect 1 tube (blue or blue and white striped) from collector box.
       (2.) Connect 1 tube (violet or unmarked) from inducer housing.
       (3.) Connect 1 tube (relief port, green or pink) from collector box.
    c. Connect field drain to condensate trap.

NOTE: Ensure tubes are not kinked or pinched, as this will affect operation.

12. Reinstall control box, transformer, and door switch assembly on blower shelf.
13. Reconnect wires.
    Refer to furnace wiring diagram and connect thermostat leads if previously disconnected. (See Fig. 15.)

NOTE: Refer to Table 3 for motor speed lead reconnection if leads were not identified before disconnection.

⚠ CAUTION

UNIT DAMAGE HAZARD

Failure to follow this caution may result in unit component damage.

Heating speed selection MUST be adjusted to provide proper temperature rise as specified on the rating plate.

Table 3 – Speed Selection

COLOR	SPEED	FACTORY SHIPPED CONNECTION
Gray	5	Cool
Yellow	4	Spare
Blue	3	Heat
Orange	2	Spare
Red	1	Cont Fan

⚠ WARNING

ELECTRICAL SHOCK HAZARD

Failure to follow this warning could result in personal injury or death.

Blower access panel door switch opens 115-v power to furnace control. No component operation can occur. Caution must be taken when manually closing this switch for service purposes.

14. Turn on electrical supply. Manually close blower access panel door switch. Use a piece of tape to hold switch closed. Check for proper rotation and speed changes between heating and cooling by jumpering R to G and R to Y/Y2 on furnace control thermostat terminals. (See Fig. 15.)
15. If furnace is operating properly, release blower access panel door switch, replace blower access panel, and replace main furnace door.

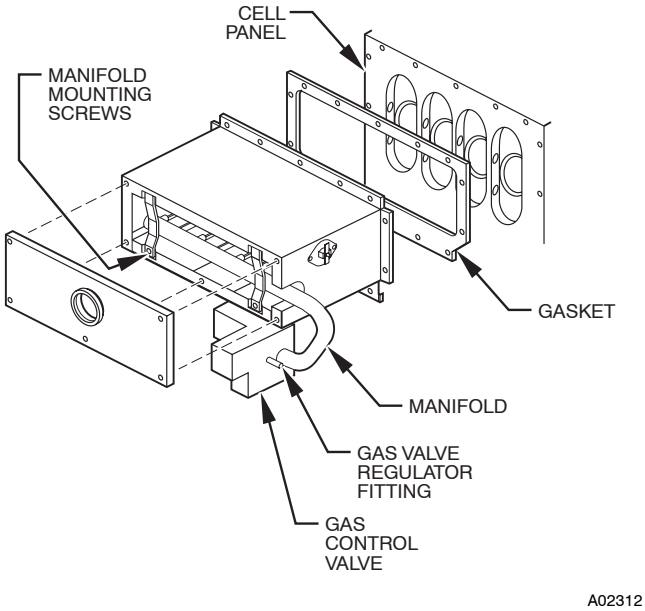

Fig. 6 - Burner Box Assembly

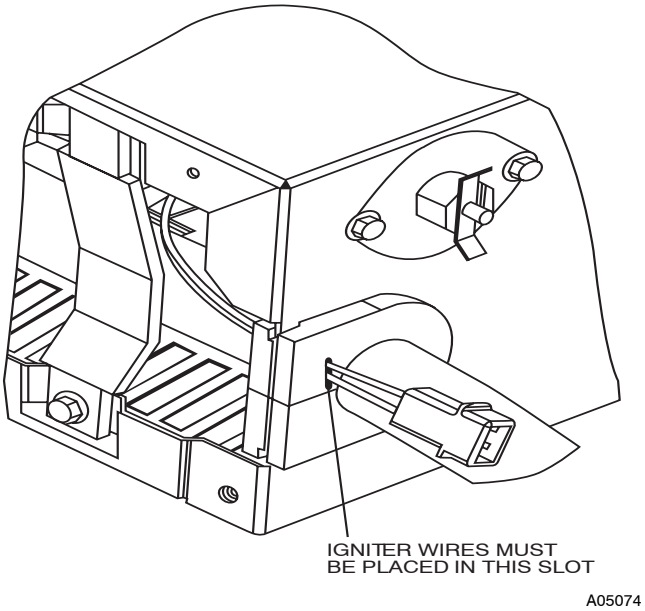

Fig. 7 - Igniter Wire Placement

Step 3 — Cleaning Burners

The following items should be performed by a qualified service technician. If the burners develop an accumulation of light dirt or dust, they may be cleaned by using the following procedure:

1. Turn off gas and electrical supplies to furnace.
2. Remove main furnace door.
3. Remove burner box cover.
4. Using backup wrench, disconnect gas supply pipe from furnace gas control valve.

⚠ CAUTION

UNIT DAMAGE HAZARD

Failure to follow this caution may result in furnace component damage.

Label all wires prior to disconnection when servicing controls. Wiring errors can cause improper and dangerous operation.

5. Remove wires from gas valve. Note location for reassembly.
6. Remove burner box pressure tube from gas valve regulator fitting.
7. Unplug igniter from harness.
8. Remove igniter leads from slot in manifold grommet.
9. Remove screws that secure manifold to burner box. (See Fig. 6.)

NOTE: Do not remove burner box from cell panel.

10. Remove manifold, orifices, and gas valve as 1 assembly.
11. Remove screws attaching burner assembly in burner box.

NOTE: Use care when removing and reinstalling burners not to strike the hot surface igniter.

12. Remove burner assembly from burner box.

NOTE: All burners are attached to burner bracket and can be removed as 1 assembly.

13. Clean burners with soft brush and vacuum.
14. Reinstall manifold, orifice, and gas valve assembly in burner box. Ensure manifold seal grommet is installed properly and burners fit over orifices.
15. Reinsert the igniter wires in the slot in the manifold grommet, dressing the wires to ensure there is no tension on the igniter itself. (See Fig. 7.)

⚠ CAUTION

UNIT COMPONENT ELECTRICAL SHORT HAZARD

Failure to follow this caution may result in unit component damage.

Igniter wires must be securely placed in slot in manifold grommet or else they could become pinched or severed and electrically shorted.

16. Reconnect wires to gas valve and igniter. Refer to furnace wiring diagram for proper wire location.
17. Reinstall burner box pressure tube to gas valve regulator fitting.
18. Reinstall gas supply pipe to furnace gas control valve using backup wrench on gas valve to prevent rotation and improper orientation.

NOTE: Use propane gas resistant pipe dope to prevent gas leaks. DO NOT use Teflon tape.

⚠ WARNING

FIRE, EXPLOSION, UNIT DAMAGE HAZARD

Failure to follow this warning could result in personal injury, death, or property damage.

Gas valve switch MUST be facing forward or tilted slightly.

19. Replace burner box cover.
20. Turn on gas and electrical supplies to furnace.

⚠ WARNING

FIRE OR EXPLOSION HAZARD

Failure to follow this warning could result in personal injury, death or property damage.

Never test for gas leaks with an open flame. Use a commercially available soap solution made specifically for the detection of leaks to check all connections.

21. Check for gas leaks.
22. Replace main furnace door.

Step 4 — Cleaning Heat Exchangers

The following items should be performed by a qualified service technician.

Primary Heat Exchangers

If the heat exchangers get an accumulation of light dirt or dust on the inside, they may be cleaned by the following procedure:

NOTE: If the heat exchangers get a heavy accumulation of soot and carbon, both the primary and secondary heat exchangers should be replaced rather than trying to clean them thoroughly due to their intricate design. A build-up of soot and carbon indicates that a problem exists which needs to be corrected, such as improper adjustment of manifold pressure, insufficient or poor quality combustion air, improper vent termination, incorrect size or damaged manifold orifice(s), improper gas, or a restricted heat exchanger (primary or secondary). Action must be taken to correct the problem.

1. Turn off gas and electrical supplies to furnace.
2. Remove main furnace door.

⚠ CAUTION

UNIT DAMAGE HAZARD

Failure to follow this caution may result in furnace component damage.

Label all wires prior to disconnection when servicing controls. Wiring errors can cause improper and hazardous operation.

3. Disconnect wires or connectors to flame rollout switch, gas valve, igniter, and flame sensor.
4. Disconnect combustion-air intake pipe from intake housing.
5. Remove the pressure switch tube from intake housing.
6. Remove screws attaching intake housing to burner box, and rotate intake housing away from burner box for removal.
7. Using backup wrench, disconnect gas supply pipe from furnace gas control valve.
8. Disconnect pressure tubing from gas valve.
9. Remove 2 screws attaching top filler panel and rotate upwards to gain access to screws attaching burner box to cell panel.
10. Remove screws attaching burner box to cell panel. (See Fig. 6.)

NOTE: Burner box, cover, manifold, gas valve, and burner assembly should be removed as 1 assembly.

11. Clean heat exchanger openings with a vacuum and a soft brush. (See Fig. 8.)

NOTE: After cleaning, inspect the heat exchangers to ensure they are free of all foreign objects that may restrict flow of combustion products.

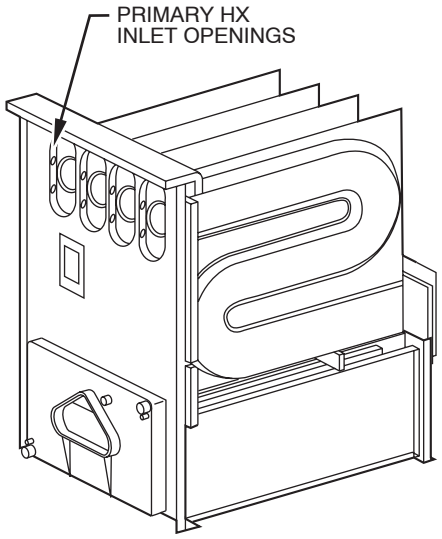

A96305

Fig. 8 - Cleaning Inlet Openings of Primary Heat Exchangers

⚠ CAUTION

UNIT MAY NOT OPERATE

Failure to follow this caution may result in improper or intermittent unit operation.

The ground wire from the gas valve MUST be attached to the burner box attachment screw.

12. Reverse items 3 through 10 for reassembly.

NOTE: Be sure burner box gasket is installed between burner box and cell panel. (See Fig. 6.) If gasket is damaged, replace it.

NOTE: Inspect combustion-air intake housing. If foamed gasket was removed, check for any damage. If gasket is damaged in any way, it must be repaired. To repair, remove damaged gasket section, apply sealant releasing agent such as PAM cooking spray or equivalent (must not contain corn nor canola oil, halogenated hydrocarbons nor aromatic content, to prevent inadequate seal from occurring) to burner box and apply a small bead of G.E. RTV 162, G.E. RTV 6702, or Dow-Corning RTV 738 sealant to edge of combustion-air intake housing. (See Fig. 9.)

13. Refer to furnace wiring diagram and reconnect wires to flame rollout switch, gas valve, igniter, and flame sensor.
14. Reconnect pressure switch tubes to gas valve and intake housing. Refer to tube routing label on main furnace door for proper tube location. (See Fig. 10.) Be sure tubes are not kinked.
15. Turn on gas and electrical supplies to furnace.
16. Check furnace operation through 2 complete heat operating cycles. Look through sight glass in burner enclosure to check burners. Burner flames should be clear blue, almost transparent. (See Fig. 11.)

17. Check for gas leaks.

⚠ WARNING

FIRE OR EXPLOSION HAZARD

Failure to follow this warning could result in personal injury, death or property damage.

Never test for gas leaks with an open flame. Use a commercially available soap solution made specifically for the detection of leaks to check all connections.

18. Replace main furnace door.

Secondary Heat Exchangers

NOTE: The condensing side (inside) of the secondary heat exchangers CANNOT be serviced or inspected. A small number of bottom outlet openings can be inspected by removing the inducer assembly. See Flushing Collector Box and Drainage System section for details on removing inducer assembly.

Step 5 — Flushing Collector Box and Drainage System

1. Turn off gas and electrical supplies to furnace.
2. Remove main furnace door.
3. Disconnect inducer motor and pressure switch wires or connectors.
4. Disconnect pressure switch tubes.
5. Disconnect vent pipe from inducer housing outlet by loosening coupling clamp on inducer outlet.

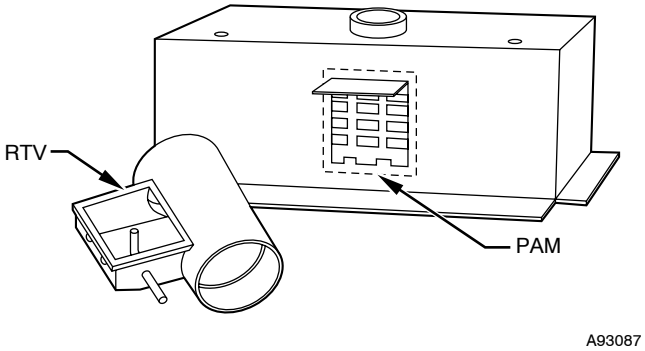

Fig. 9 - Combustion-Air Intake Housing Gasket Repair

6. Disconnect drain tube from inducer housing. (See Fig. 10.)

NOTE: Ensure the drain tube disconnected from the inducer housing is higher than the collector box opening or water will flow out of tube.

7. Remove inducer housing assembly by removing 4 bolts attaching assembly to cell panel.
8. Flush inside of collector box with water until discharge from condensate trap is clean and runs freely.
9. Inspect inside area of collector box for any pieces of foreign materials and remove them if present.

⚠ CAUTION

UNIT DAMAGE HAZARD

Failure to follow this caution may result in furnace component damage.

DO NOT use wire brush or other sharp object to inspect or dislodge materials in secondary heat exchangers as cutting of the secondary heat exchanger protective coating may occur. Flush with water only.

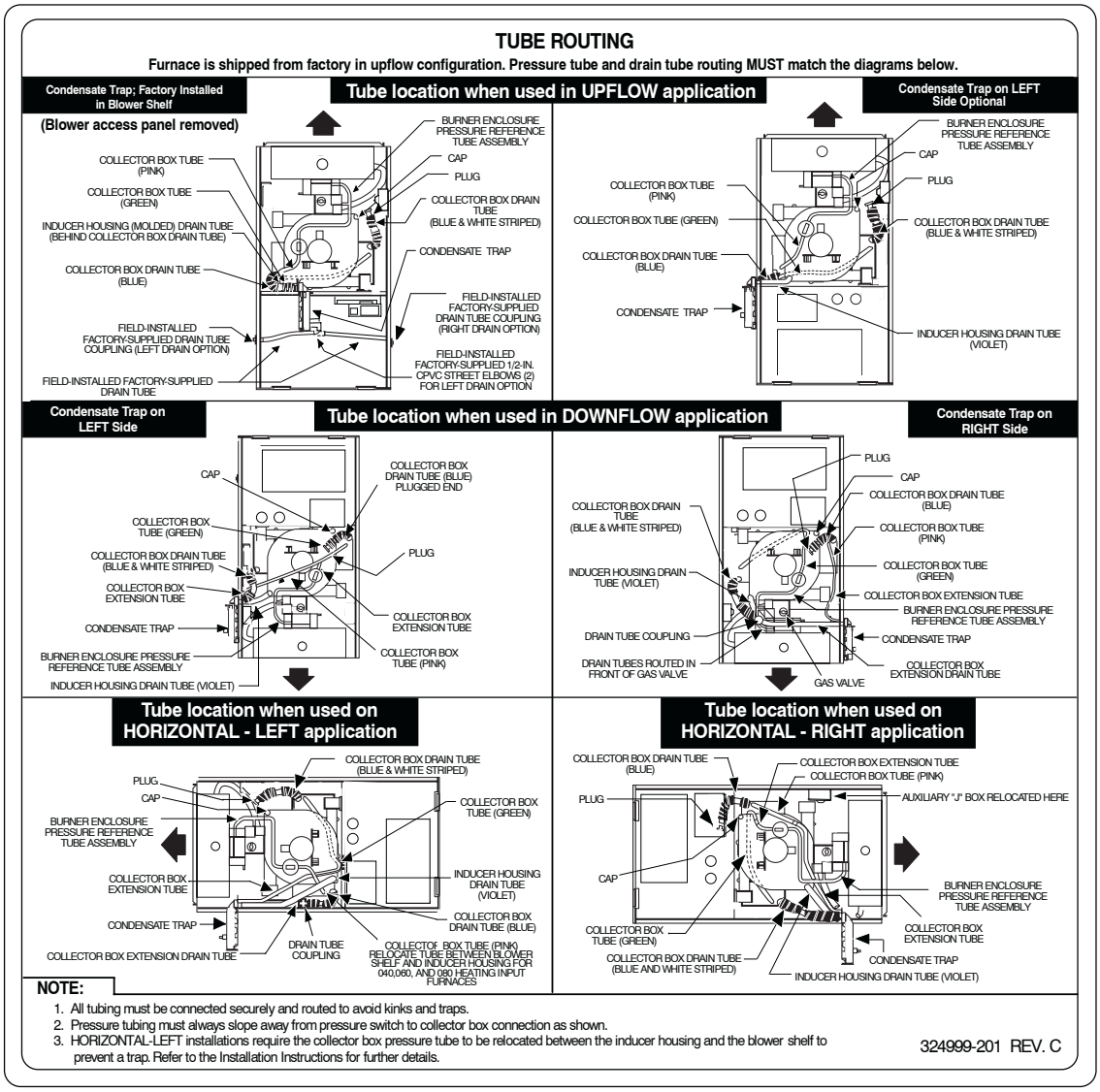

A00308

Fig. 10 – Furnace Pressure and Drain Tubing Diagram

10. Reassemble inducer assembly by reversing items 3-7. Tighten the vent coupling clamp screw(s) to 15 in.-lb of torque.

NOTE: If seal between the inducer housing and the collector box is damaged in any way, it must be repaired. To repair, apply sealant releasing agent such as PAM cooking spray or equivalent (must not contain corn nor canola oil, halogenated hydrocarbons nor aromatic content, to prevent inadequate seal from occurring) to inducer housing. Apply a small bead of G.E. RTV 162, G.E. RTV 6702, or Dow-Corning RTV 738 sealant to groove in collector box. (See Fig. 12.)

11. Refer to furnace wiring diagram and reconnect wires to inducer motor and pressure switches or connectors.
12. Reconnect pressure tubes to pressure switches. See diagram on main furnace door for proper location of tubes. Be sure tubes are not kinked. (See Fig. 10.)
13. Turn on gas and electrical supplies to furnace.
14. Check furnace operation through 2 complete heat operating cycles. Check area below inducer housing, vent pipe, and condensate trap to ensure no condensate leaks occur. If leaks are found, correct the problem.
15. Check for gas leaks.

⚠ WARNING

FIRE OR EXPLOSION HAZARD

Failure to follow this warning could result in personal injury, death or property damage.

Never test for gas leaks with an open flame. Use a commercially available soap solution made specifically for the detection of leaks to check all connections.

16. Replace main furnace door.

Step 6 — Servicing Hot Surface Igniter

The igniter does NOT require annual inspection. Check igniter resistance before removal.

1. Turn off gas and electrical supplies to furnace.

⚠ CAUTION

BURN HAZARD

Failure to follow this caution may result in personal injury.

Allow igniter to cool before removal. Normal operating temperatures exceed 2000°F (1093°C).

2. Remove main furnace door.
3. Disconnect igniter wire connection.
4. Check igniter resistance. Igniter resistance is affected by temperature. Only check resistance when the igniter is at room temperature.
   a. Using an ohm meter, check resistance across both igniter leads in connector.
   b. Cold reading should be between 40 ohms and 70 ohms.
5. Remove igniter assembly.
   a. Remove burner box cover.
   b. Remove igniter wires from slot in manifold grommet. (See Fig. 7.)
   c. Using a 1/4-in. driver, remove the single screw securing the igniter bracket to the burner box bracket (See Fig. 13.) and carefully withdraw the igniter and bracket assembly through the front of the burner box without striking the igniter on surrounding parts. Note that the igniter bracket has a handle that extends to the front of the burner box to aid in handling. (See Fig. 13.)
   d. Inspect igniter for signs of damage or failure.

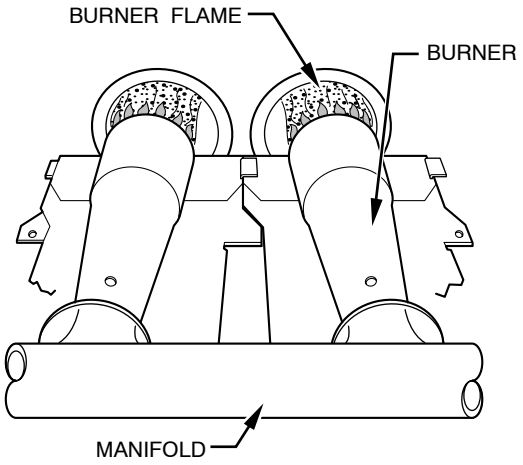

A89020

Fig. 11 - Burner Flame

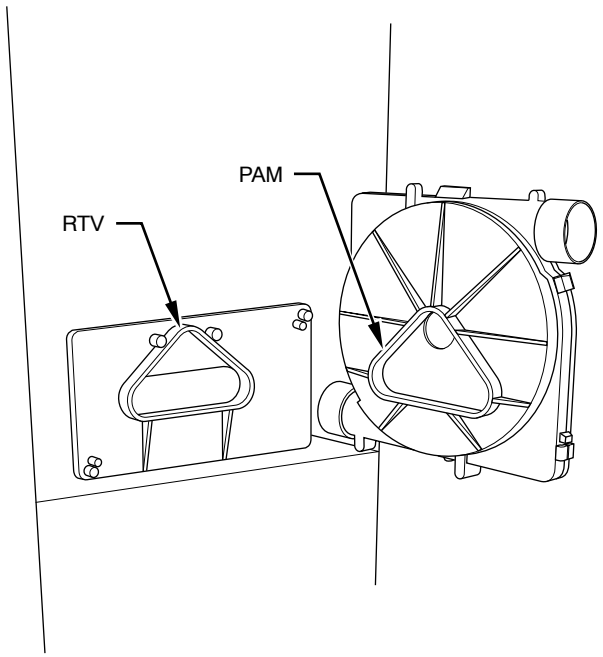

A93081

Fig. 12 - Gasket on Collector Box

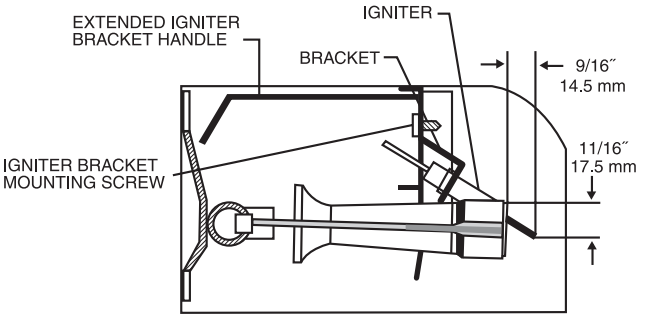

A05075

Fig. 13 - Igniter Bracket

⚠ CAUTION

UNIT DAMAGE HAZARD

Failure to follow this caution may result in unit component damage.

The igniter is fragile. DO NOT allow it to hit burner box parts while removing or replacing it.

   e. If replacement is required, replace igniter on igniter bracket and then install assembly into burner box to avoid damage to the igniter.
6. To replace igniter and bracket assembly, reverse items 5a through 5c.
7. Reconnect igniter wire connection and insert the igniter wires in the slot in the manifold grommet, dressing the igniter wires to ensure there is no tension on the igniter itself. (See Fig.7.)

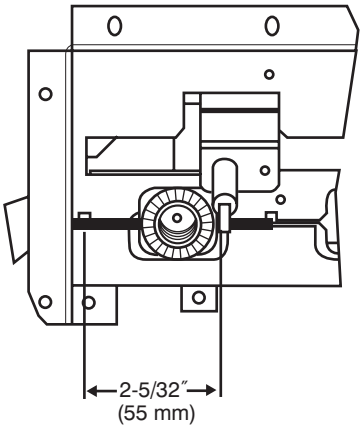

A04181

Fig. 14 - Igniter

⚠ CAUTION

UNIT COMPONENT ELECTRICAL SHORT HAZARD

Failure to follow this caution may result in unit component damage.

Igniter wires must be securely placed in slot in manifold grommet or else they could become pinched or severed and electrically shorted.

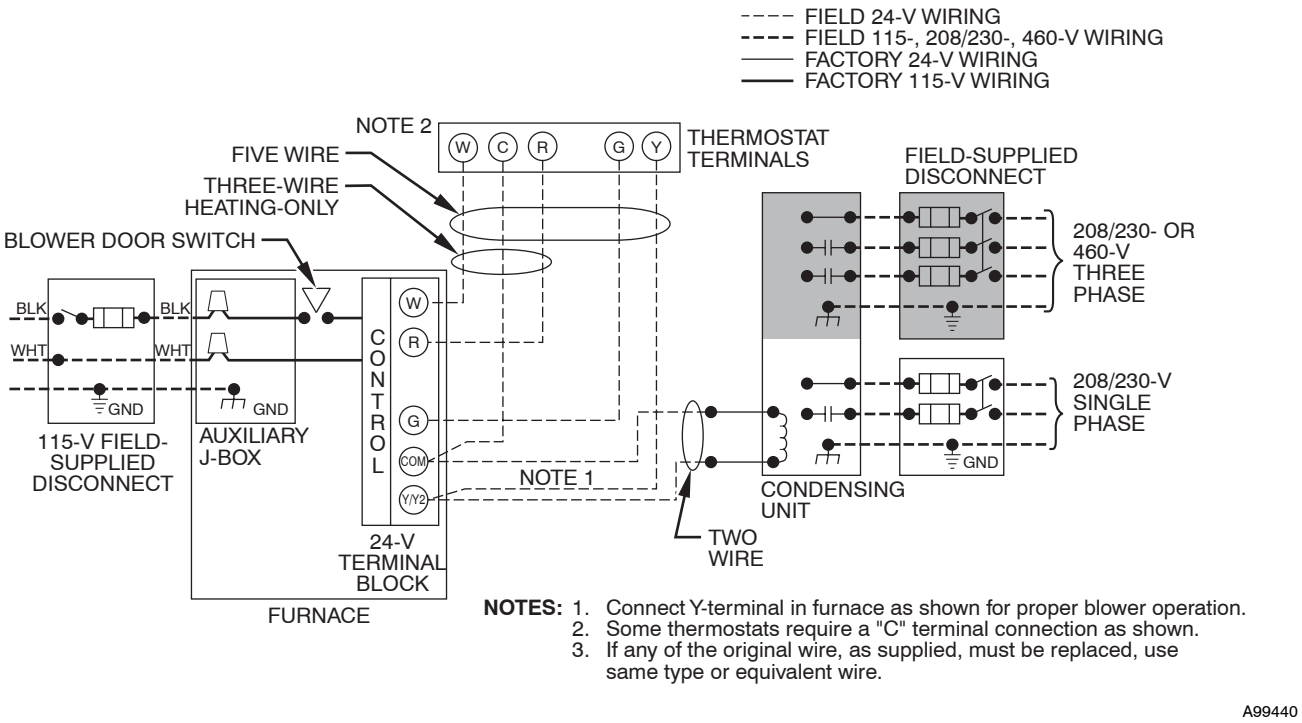

Fig. 15 - Field Wiring

8. Reinstall burner box cover.
9. Turn on gas and electrical supplies to furnace.
10. Verify igniter operation by initiating control board self-test feature or by cycling thermostat.
11. Replace main furnace door.

Step 7 — Electrical Controls and Wiring

⚠ WARNING

ELECTRICAL SHOCK HAZARD

Failure to follow this warning could result in personal injury or death.

There may be more than one electrical supply to the unit. Check accessories and cooling unit for additional electrical supplies.

The electrical ground and polarity for 115-v wiring must be maintained properly. Refer to Fig. 15 for field wiring information and to Fig. 21 for unit wiring information.

NOTE: If the polarity is not correct or furnace is not properly grounded, the STATUS LED on the furnace control will flash rapidly and prevent the furnace from operating. The control system also requires an earth ground for proper operation of the furnace control and flame sensor.

The 24-v circuit contains an automotive-type, 3-amp fuse located on the furnace control. (See Fig. 16.) Any direct shorts of the 24-v wiring during installation, service, or maintenance will cause this fuse to blow. If fuse replacement is required, use ONLY a fuse of identical size. The furnace control LED will flash status code 24 when fuse needs to be replaced.

With power to the unit disconnected, check all electrical connections for tightness. Tighten all screws on electrical connections. If any smoky or burned connections are found, disassemble the connection, clean all parts, strip wire, and reassemble properly and securely.

Reconnect electrical supply to unit and observe unit through 1 complete operating cycle and check for proper operation.

Step 8 — Checking Heat Tape Operation (If Applicable)

In applications where the ambient temperature around the furnace is 32°F (0°C) or lower, freeze protection measures are required. If this application is where heat tape has been applied, check to ensure it will operate when low temperatures are present.

NOTE: Heat tape, when used, should be wrapped around the condensate drain trap and drain line. There is no need to use heat tape within the furnace casing. Most heat tapes are temperature activated, and it is not practical to verify the actual heating of the tape. Check the following:

1. Check for signs of physical damage to heat tape such as nicks, cuts, abrasions, gnawing by animals, etc.
2. Check for discolored heat tape insulation. If any damage or discolored insulation is evident, replace heat tape.
3. Check that heat tape power supply circuit is on.

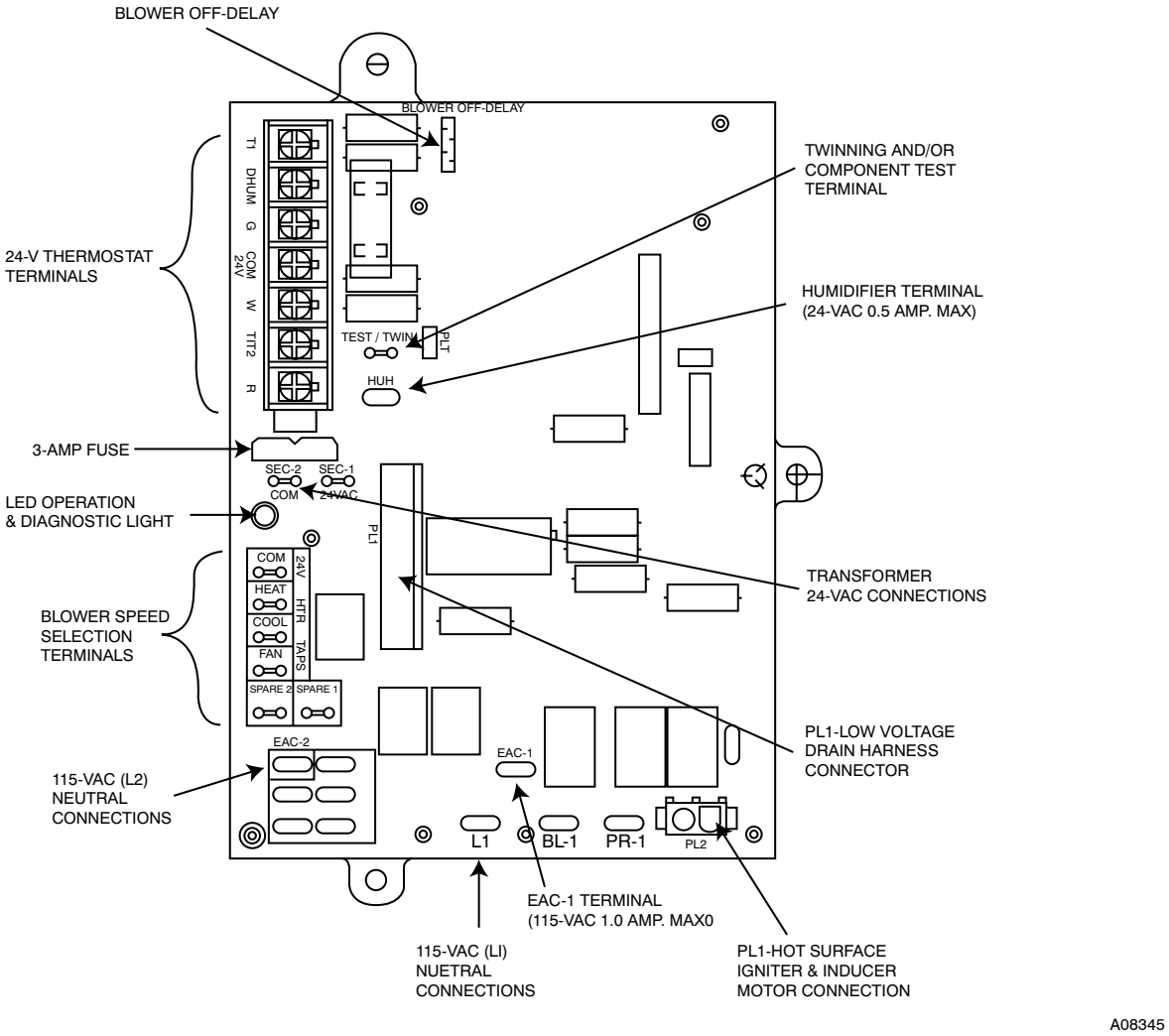

Fig. 16 - Control Center

⚠ CAUTION

UNIT AND PROPERTY DAMAGE

Failure to follow this caution may result in furnace component or property damage.

If this furnace is to be operated in an unconditioned space where the ambient temperatures may be 32°F (0°C)or lower, freeze protection measures must be taken. See CONDENSATE DRAIN PROTECTION section of Installation, Start-up, and Operating Instructions. (See Fig. 17.)

Step 9 — Winterizing

⚠ CAUTION

UNIT DAMAGE HAZARD

Failure to follow this caution may result in furnace component damage.

Freezing condensate left in the furnace may damage the furnace.

If the furnace will be off for an extended period of time in a structure where the temperature will drop to 32°F (0°C)or below, winterize as follows:

1. Turn off electrical supply to furnace.
2. Remove main furnace door.
3. Disconnect upper inducer housing drain connection cap from inducer housing. (See Fig. 18.)
4. Connect field-supplied 1/2-in. I.D. inducer housing tube to upper inducer housing drain connection.
5. Insert funnel in tube and pour one quart of antifreeze, propylene glycol (RV, swimming pool antifreeze, or equivalent) into funnel/tube until it is visible at point where condensate enters open drain. (See Fig. 19.)

⚠ CAUTION

UNIT DAMAGE HAZARD

Failure to follow this caution may result in unit component damage.

Do not use ethylene glycol (Prestone II antifreeze/coolant or equivalent automotive type).

6. Replace drain connection cap and clamp to inducer housing.
7. Replace main furnace door.
8. Propylene glycol need not be removed before restarting furnace.

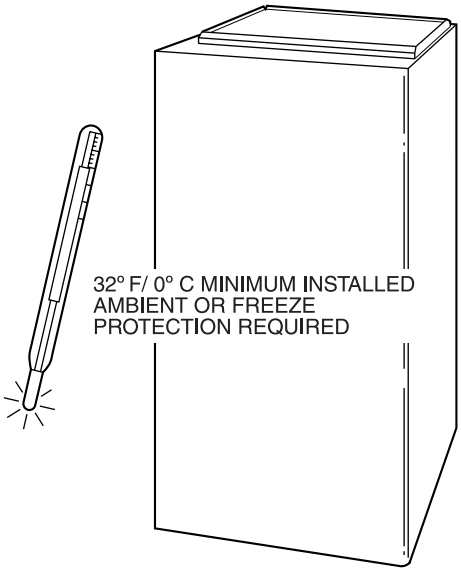

A07911

Fig. 17 - Freeze Protection

WIRING DIAGRAMS

See Fig. 15, 16 and 21 for the Deluxe 4-Way Multipoise Furnace wiring diagrams.

TROUBLESHOOTING

Use the troubleshooting guide, the status code LED on the furnace control and the component test to isolate furnace operation problems.

STATUS CODES

For an explanation of status codes, refer to service label located on back of main furnace door or Fig. 20 and the Troubleshooting Guide. The stored status code will NOT be erased from the control memory if 115- or 24-v power is interrupted.

NOTE: Removing the blower access door will open the blower access door switch and terminate 115-v power to the control.

To read current status code, remove main furnace door. The status code LED can be viewed through the sight glass on the blower access door.

NOTE: NO thermostat signals may be present at control and all blower off delays must be completed to view previous codes.

⚠ CAUTION

UNIT DAMAGE HAZARD

Failure to follow this caution may result in damage to unit components.

Make sure limit switch or flame rollout switch wire does not contact any metal component, such as gas valve. If wire is shorted, 3-amp fuse on furnace control board will open and unit will not operate.

To retrieve previous codes, remove 1 of the red main limit or flame rollout switch wires for 1 to 4 sec until the LED light goes out, then reconnect it. (Do not leave red wire disconnected for longer periods of time as the control will assume an overtemperature condition exists and will respond with blower operation.) This places the control in the status recall mode and displays the last code stored in memory.

Record the code. After the last code is displayed the control will perform the component test, and then return to normal standby mode.

COMPONENT TEST

⚠ WARNING

ELECTRICAL SHOCK AND UNIT OPERATION HAZARD

Failure to follow this warning could result in personal injury, or death.

Blower access panel door switch opens 115-v power to control board. No component operation can occur. Caution must be taken when manually closing this switch for service purposes.

Use the Component Test to check furnace components for proper operation. To initiate the component self-test sequence, shut off the room thermostat or disconnect the "R" thermostat lead. Briefly (approximately 2 sec) short the TWIN/TEST terminal to the COM 24V terminal. The status LED will turn off. The test sequence will be as follows:

1. LED flashes last status code, or code 11, 4 times. Record this status code for further troubleshooting.
2. The inducer will start and continue to run until test is over.
3. Hot surface igniter (HSI) is energized for 15 sec, then de-energized.
4. Blower operates on continuous FAN speed for 10 sec, then turns off.
5. The blower motor operates on HEATING speed for 10 sec, then turns off.
6. The blower motor operates on COOLING speed for 10 sec, then turns off.
7. Inducer turns off.
8. The gas valve and humidifier terminal HUM are not energized for safety reasons.

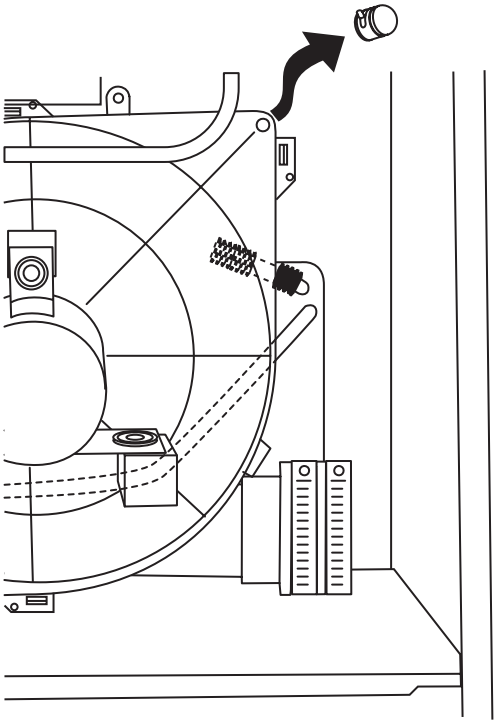

A99118

Fig. 18 - Inducer Housing Drain Tube

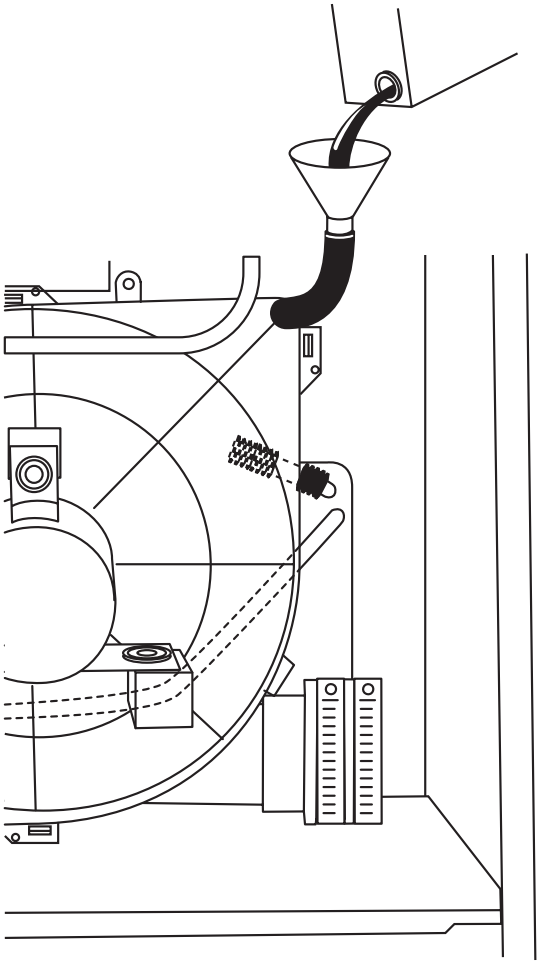

A99119

Fig. 19 - Funnel in Drain Tube and Antifreeze Running Through Trap

SERVICE

If status code recall is needed, briefly remove then reconnect one main limit wire to display stored status code. On RED LED boards do not remove power or blower door before initiating status code recall. After one status code recall is completed component test will occur.

LED CODE	STATUS
CONTINUOUS OFF	- Check for 115VAC at L1 & L2, & 24VAC at SEC-1 & SEC-2.
CONTINUOUS ON	- Control has 24VAC power.
RAPID FLASHING	- Line voltage (115VAC) polarity reversed. If twinned, refer to twinning kit instructions.

EACH OF THE FOLLOWING STATUS CODES IS A TWO DIGIT NUMBER WITH THE FIRST DIGIT DETERMINED BY THE NUMBER OF SHORT FLASHES AND THE SECOND DIGIT BY THE NUMBER OF LONG FLASHES.

11 NO PREVIOUS CODE - Stored status code is erased automatically after 72 hours. On RED LED boards stored status codes can also be erased when power (115 VAC or 24 VAC) to control is interrupted.

12 BLOWER ON AFTER POWER UP (115 VAC or 24 VAC) -Blower runs for 90 seconds, if unit is powered up during a call for heat (R-W closed) or R-W opens during blower on-delay.

13 LIMIT CIRCUIT LOCKOUT - Lockout occurs if the limit or flame rollout switch is open longer than 3 minutes.
- Control will auto reset after three hours. - Refer to #33.

14 IGNITION LOCKOUT - Control will auto-reset after three hours. Refer to #34.

21 GAS HEATING LOCKOUT - Control will NOT auto reset.
Check for: - Mis-wired gas valve -Defective control (valve relay)

22 ABNORMAL FLAME-PROVING SIGNAL - Flame is proved while gas valve is de-energized. Inducer will run until fault is cleared. Check for:
- Leaky gas valve - Stuck-open gas valve

23 PRESSURE SWITCH DID NOT OPEN Check for:
- Obstructed pressure tubing. - Pressure switch stuck closed.

24 SECONDARY VOLTAGE FUSE IS OPEN Check for:
- Short circuit in secondary voltage (24VAC) wiring.

31 PRESSURE SWITCH DID NOT CLOSE OR REOPENED - If open longer than five minutes, inducer shuts off for 15 minutes before retry. Check for:
- Excessive wind - Proper vent sizing - Defective inducer motor
- Low inducer voltage (115VAC) - Defective pressure switch
- Inadequate combustion air supply - Restricted vent
- Disconnected or obstructed pressure tubing
- Low inlet gas pressure (if LGPS used)

If it opens during blower on-delay period, blower will come on for the selected blower off-delay.

33 LIMIT CIRCUIT FAULT - Indicates a limit, or flame rollout is open. Blower will run for 4 minutes or until open switch remakes whichever is longer. If open longer than 3 minutes, code changes to lockout #13. If open less than 3 minutes status code #33 continues to flash until blower shuts off. Flame rollout switch requires manual reset. Check for: - Restricted vent
- Proper vent sizing - Loose blower wheel - Excessive wind
- Dirty filter or restricted duct system.
- Defective blower motor or capacitor. - Defective switch or connections.
- Inadequate combustion air supply (Flame Roll-out Switch open).

34 IGNITION PROVING FAILURE - Control will try three more times before lockout #14 occurs. If flame signal lost during blower on-delay period, blower will come on for the selected blower off-delay. Check for: - Control ground continuity
- Flame sensor must not be grounded
- Oxide buildup on flame sensor (clean with fine steel wool).
- Proper flame sense microamps (.5 microamps D.C. min., 4.0 - 6.0 nominal).
- Gas valve defective or gas valve turned off - Manual valve shut-off
- Defective Hot Surface Ignitor
- Low inlet gas pressure
- Inadequate flame carryover or rough ignition
- Green/Yellow wire **MUST** be connected to furnace sheet metal

45 CONTROL CIRCUITRY LOCKOUT Auto-reset after one hour lockout due to;
- Gas valve relay stuck open - Flame sense circuit failure
- Software check error

Reset power to clear lockout. Replace control if status code repeats.

COMPONENT TEST

To initiate the component test sequence, shut OFF the room thermostat or disconnect the "R" thermostat lead. Briefly short the TEST/TWIN terminal to the "Com 24V" terminal. Status LED will flash code and then turn ON the inducer motor. The inducer motor will run for the entire component test. The hot surface ignitor, blower motor FAN speed (AMBER LED boards only) blower motor HEAT speed, and blower motor COOL speed will be turned ON for 10-15 seconds each. Gas Valve and Humidifier will not be turned on.

327884-101 REV. B

A02270

Fig. 20 - Service Label

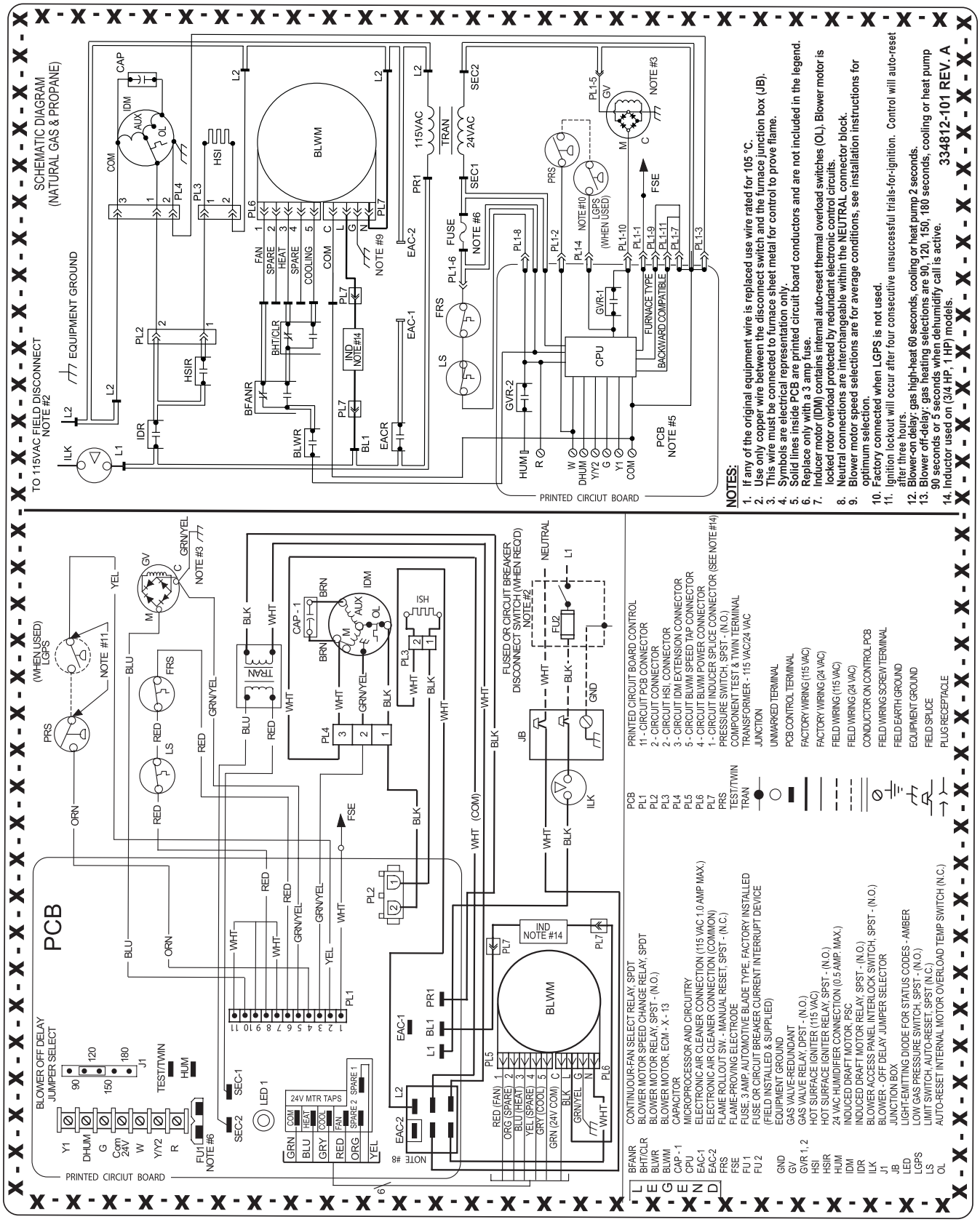

A08342

Fig. 21 - Wiring Diagram

TROUBLESHOOTING GUIDE

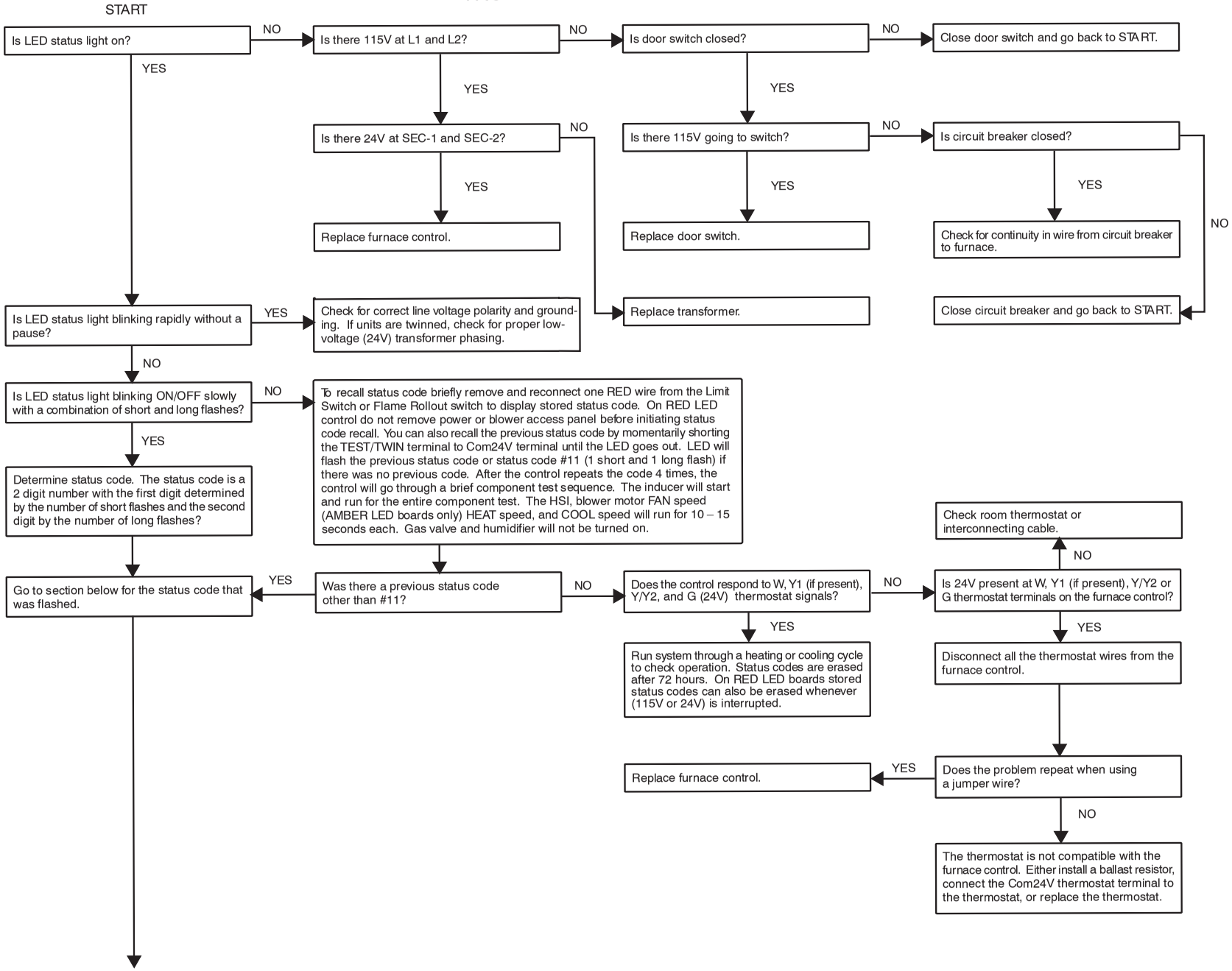

A05107

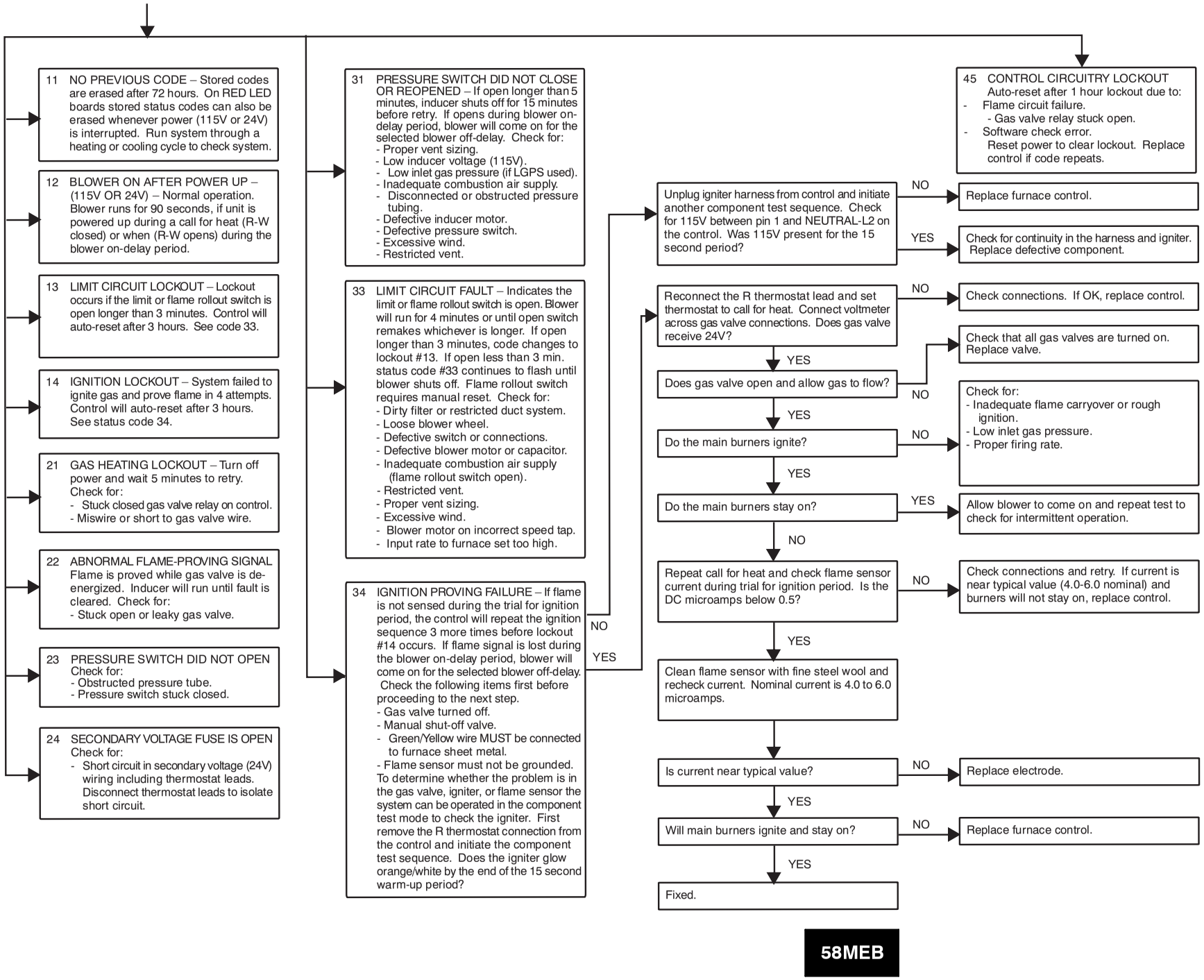
11 NO PREVIOUS CODE – Stored codes are erased after 72 hours. On RED LED boards stored status codes can also be erased whenever power (115V or 24V) is interrupted. Run system through a heating or cooling cycle to check system.
12 BLOWER ON AFTER POWER UP – (115V OR 24V) – Normal operation. Blower runs for 90 seconds, if unit is powered up during a call for heat (R-W closed) or when (R-W opens) during the blower on-delay period.
13 LIMIT CIRCUIT LOCKOUT – Lockout occurs if the limit or flame rollout switch is open longer than 3 minutes. Control will auto-reset after 3 hours. See code 33.
14 IGNITION LOCKOUT – System failed to ignite gas and prove flame in 4 attempts. Control will auto-reset after 3 hours. See status code 34.
21 GAS HEATING LOCKOUT – Turn off power and wait 5 minutes to retry. Check for:
- Stuck closed gas valve relay on control.
- Miswire or short to gas valve wire.
22 ABNORMAL FLAME-PROVING SIGNAL Flame is proved while gas valve is de-energized. Inducer will run until fault is cleared. Check for:
- Stuck open or leaky gas valve.
23 PRESSURE SWITCH DID NOT OPEN Check for:
- Obstructed pressure tube.
- Pressure switch stuck closed.
24 SECONDARY VOLTAGE FUSE IS OPEN Check for:
- Short circuit in secondary voltage (24V) wiring including thermostat leads. Disconnect thermostat leads to isolate short circuit.
31 PRESSURE SWITCH DID NOT CLOSE OR REOPENED – If open longer than 5 minutes, inducer shuts off for 15 minutes before retry. If opens during blower on-delay period, blower will come on for the selected blower off-delay. Check for:
- Proper vent sizing.
- Low inducer voltage (115V).
- Low inlet gas pressure (if LGPS used).
- Inadequate combustion air supply.
- Disconnected or obstructed pressure tubing.
- Defective inducer motor.
- Defective pressure switch.
- Excessive wind.
- Restricted vent.
33 LIMIT CIRCUIT FAULT – Indicates the limit or flame rollout switch is open. Blower will run for 4 minutes or until open switch remakes whichever is longer. If open longer than 3 minutes, code changes to lockout #13. If open less than 3 min. status code #33 continues to flash until blower shuts off. Flame rollout switch requires manual reset. Check for:
- Dirty filter or restricted duct system.
- Loose blower wheel.
- Defective switch or connections.
- Defective blower motor or capacitor.
- Inadequate combustion air supply (flame rollout switch open).
- Restricted vent.
- Proper vent sizing.
- Excessive wind.
- Blower motor on incorrect speed tap.
- Input rate to furnace set too high.
34 IGNITION PROVING FAILURE – If flame is not sensed during the trial for ignition period, the control will repeat the ignition sequence 3 more times before lockout #14 occurs. If flame signal is lost during the blower on-delay period, blower will come on for the selected blower off-delay. Check the following items first before proceeding to the next step.
- Gas valve turned off.
- Manual shut-off valve.
- Green/Yellow wire MUST be connected to furnace sheet metal.
- Flame sensor must not be grounded.
To determine whether the problem is in the gas valve, igniter, or flame sensor the system can be operated in the component test mode to check the igniter. First remove the R thermostat connection from the control and initiate the component test sequence. Does the igniter glow orange/white by the end of the 15 second warm-up period?
NO
YES
Unplug igniter harness from control and initiate another component test sequence. Check for 115V between pin 1 and NEUTRAL-L2 on the control. Was 115V present for the 15 second period?
NO
Replace furnace control.
YES
Check for continuity in the harness and igniter. Replace defective component.
Reconnect the R thermostat lead and set thermostat to call for heat. Connect voltmeter across gas valve connections. Does gas valve receive 24V?
NO
Check connections. If OK, replace control.
YES
Does gas valve open and allow gas to flow?
NO
Check that all gas valves are turned on. Replace valve.
YES
Do the main burners ignite?
NO
Check for:
- Inadequate flame carryover or rough ignition.
- Low inlet gas pressure.
- Proper firing rate.
YES
Do the main burners stay on?
YES
Allow blower to come on and repeat test to check for intermittent operation.
NO
Repeat call for heat and check flame sensor current during trial for ignition period. Is the DC microamps below 0.5?
NO
Check connections and retry. If current is near typical value (4.0-6.0 nominal) and burners will not stay on, replace control.
YES
Clean flame sensor with fine steel wool and recheck current. Nominal current is 4.0 to 6.0 microamps.
Is current near typical value?
NO
Replace electrode.
YES
Will main burners ignite and stay on?
NO
Replace furnace control.
YES
Fixed.
45 CONTROL CIRCUITRY LOCKOUT Auto-reset after 1 hour lockout due to:
- Flame circuit failure.
- Gas valve relay stuck open.
- Software check error.
Reset power to clear lockout. Replace control if code repeats.
58MEB

A05096

Copyright 2008 Carrier Corp. • 7310 W. Morris St. • Indianapolis, IN 46231 Printed in U.S.A. Edition Date: 06/08 **Catalog No: 58MEB−01SM**

Manufacturer reserves the right to change, at any time, specifications and designs without notice and without obligations. Replaces: New