# 58MEC PERFORMANCE™ BOOST 90 4–WAY MULTIPOISE 2–STAGE CONDENSING GAS FURNACE
## Input Rates: 60,000 thru 120,000 Btuh

Carrier
turn to the experts

# Product Data

## 4-WAY MULTIPOISE DESIGN ALLOWS MORE APPLICATIONS

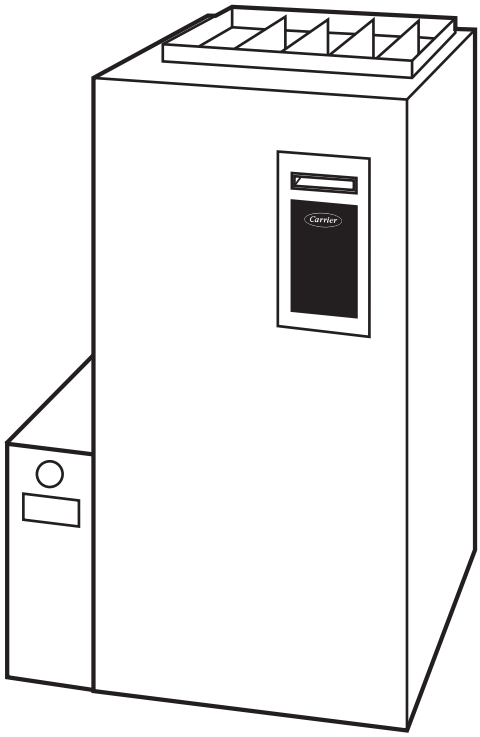


A05069

## A UNIQUE SEER SOLUTION

The Performance™ Boost 90 is an exciting addition to your product line. This high-efficiency two-stage 4-way multipoise design furnace allows more applications while the ECM motor and Carrier's control logic combine to provide a SEER BOOST of up to 1.5 points.* The Performance Boost 90 is available in 5 heat/air-flow combinations and with the 4-way multipoise design can be installed in upflow, downflow, or horizontal positions covering up to 24 applications.

Some of Carrier's best-engineered components contribute to the efficient performance of this condensing furnace. The Performance Boost 90 utilizes Power Heat™ hot surface ignition (HSI), which ignites the burners directly. HSI eliminates gas waste that typical continuous-pilot designs can bring. Hot surface ignition has proven to contribute to reliable start-up and operation of Carrier furnaces.

Another deluxe feature included with this furnace is Carrier's trusted Serpentuff™ secondary heat exchanger; a patented polypropylene laminate that provides exceptional heat transfer and corrosion resistance. Using the exclusive flow-through design, the secondary heat exchanger reduces the pressure drop in the furnace resulting in lower electrical usage. The high efficiency achieved by superior heat transfer is made only better—by optimizing the efficient ECM motor speed tap locations.

A standard media filter cabinet accessory is provided with the Performance Boost 90 in order to provide an opportunity to enhance indoor air quality. As with all other Carrier furnaces, this model is designed to work as a part of the total home comfort system which includes elements for cooling, air cleaning, humidification, ventilation and zoning. Boosting the unit's efficiency with the ECM motor and Carrier's deluxe features show the Performance Boost 90 has been designed with the homeowner in mind.

## PERFORMANCE™ BOOST 90 FEATURES & BENEFITS

**ComfortHeat™ Technology** — The Performance™ Boost 90 has a 2-stage gas valve to vary the amount of gas being used from low-heat to high-heat stage. The low-stage operation allows longer running periods, which helps maintain your most comfortable temperature, prevents drafts, reduces noise, and enhances the air quality of your home. During the extreme cold, the high-heat levels will run to ensure that you are still comfortable.

**ECM Blower Motor** — The ECM motor and Carrier's control logic can help selected 13- and 14-SEER Carrier Air Conditioners achieve added energy efficiency up to 1.5 SEER as compared to the Air Conditioning and Refrigeration Institute's standard coil-only rating. (A/Cs up to 3.5 tons) when paired with selected Carrier evaporator coils.

**Serpentuff™** — Exclusive Serpentuff coating, a patented polypropylene laminate is used on the secondary heat exchanger and greatly reduces maintenance.

**Power Heat™ Igniter** — Carrier's unique SiN igniter is not only physically robust but it is also electrically robust. It is capable of running at line voltage and does not require complex voltage regulators as do other brands. This unique feature further enhances the reliability of the Performance Boost 90 gas furnace and continues Carrier's tradition of technology leadership and innovation in providing a reliable and durable product.

**ComfortFan™** — Improves comfort all year long by allowing the homeowner to select different fan speeds during continuous fan operation to achieve more or less airflow. This is done right at the thermostat.

**SmartEvap™** — This feature allows your system to reduce summertime humidity levels by nearly 10% over standard systems.

*as compared to the Air–Conditioning, Heating and Refrigeration Institute's standard coil–only rating (A/Cs up to 3.5 tons) when paired with selected Carrier evaporator coils.

**Media Filter Cabinet** — Enhanced indoor air quality in your home is made easier with our media filter cabinet—a standard accessory on all Deluxe furnaces. When installed as a part of your system, this cabinet allows for easy and convenient addition of a Carrier high-efficiency air filter.

**Control Center** — A microprocessor controls sequencing and furnace operation. Equipped with a component test feature and status indicator light to assist in troubleshooting. The microprocessor controls blower times to start blower after main burners ignite to eliminate cold air blowing into rooms.

**Direct or Non-direct Venting** — The Performance Boost 90 can be installed as a two-pipe (direct vent) or a one-pipe/non-direct vent application (except 140 size). This provides added flexibility to meet diverse installation needs.

**Insulated Blower Compartment** —The acoustical insulation reduces air and motor noise to promote quiet operation.

**Combustion Products Venting** — The combustion-air and vent pipes can terminate through a side wall or through the roof when used with a factory-authorized vent termination kit.

**Insulation** — Foil-faced insulation in heat exchanger section of the casing minimizes heat loss.

**Bottom Closure** — Factory-installed for side return; easily removable for bottom return.

**Filter** — Cleanable filter with retainer is standard.

**Blower Access Panel Switch** — Shuts off all 115-v power through furnace components whenever blower access panel is opened.

**Casing** — One piece, seamless wrap-around construction of heavy, galvanized steel that resists corrosion.

**Adjustable Blower Speed** — For precise airflow selection of heating or cooling operation.

**Monoport Burners** — The burners are finely tuned for smooth, quiet combustion plus economical gas usage.

**Slow Opening Redundant Gas Valve** — Shuts off gas to burners if any of the valves fails to close completely for any reason. The slow opening feature reduces start-up noise from rapid ignition.

Quality Registration — The Performance Boost 90 is engineered and manufactured under an ISO 9001 registered quality system.

**Certifications** — The Performance Boost 90 Model units are CSA design certified for use with natural and propane gases. The furnace is factory-shipped for use with natural gas. A CSA (A.G.A./C.G.A.) listed gas conversion kit is required to convert furnace for use with propane gas. The efficiency is AHRI efficiency rating certified. The Performance Boost 90 meets California Air Quality Management District emission requirements. Refer to Vent Table, for elevation limitations.

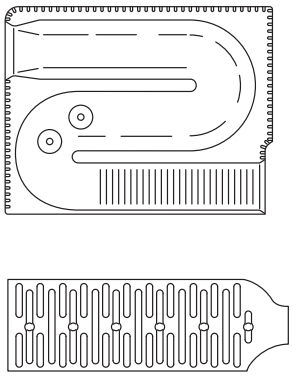

A92505

**HEAT EXCHANGERS**

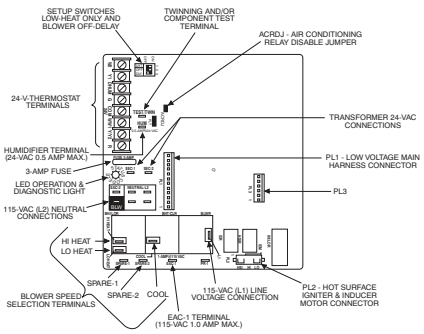


A02017

**CONTROL CENTER**

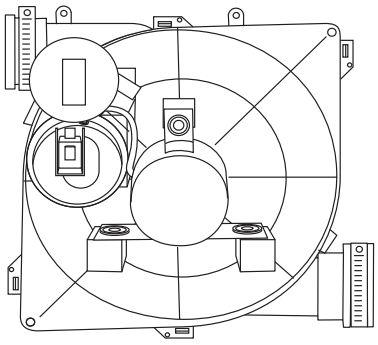

A01160

**INDUCER ASSEMBLY**

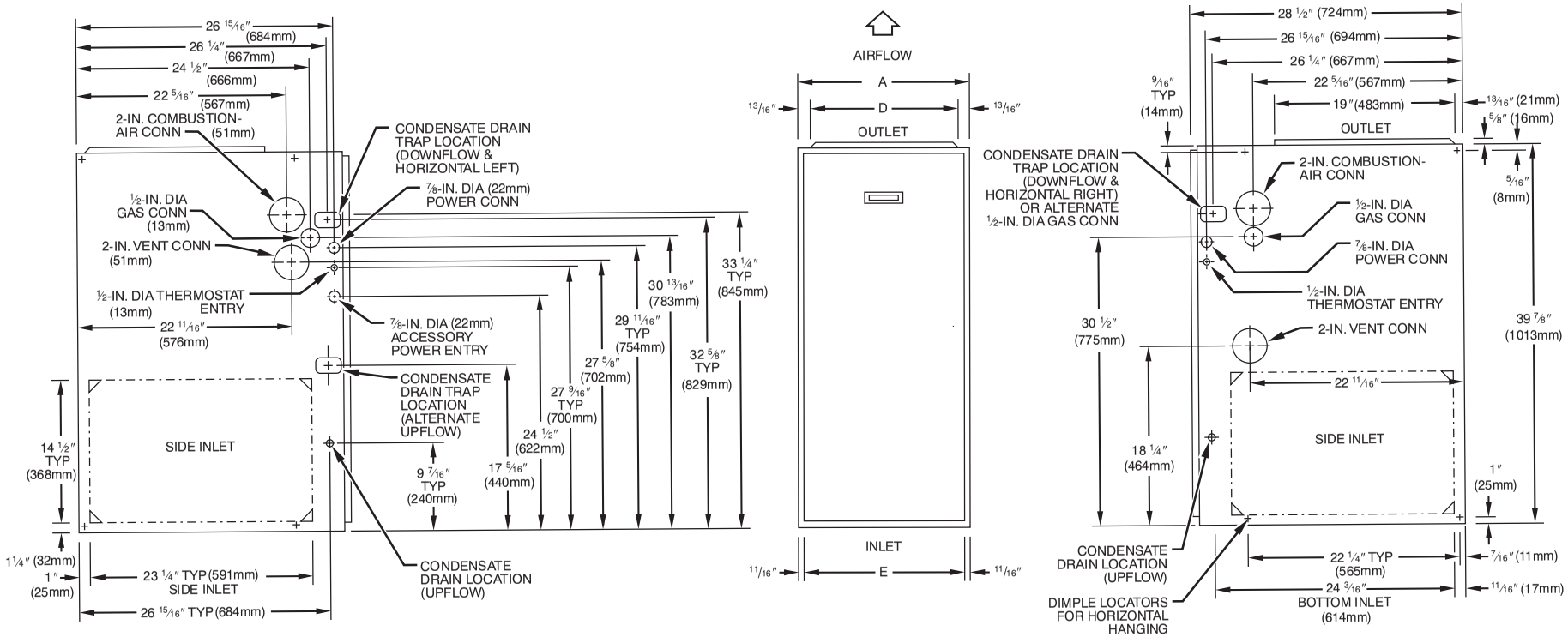


**NOTES:** 1. Minimum return-air openings at furnace, based on metal duct. If flex duct is used, see flex duct manufacturer© recommendations for equivalent diameters.

2. Minimum return-air opening at furnace:
   a. For 800 CFM 16-in . (406mm) round or 14 1/2 (368mm) x 12-in. (305mm) rectangle.
   b. For 1200 CFM 20-in . (508mm) round or 14 1/2 (368mm) x 19 1/2-in. (495mm) rectangle.
   c. For 1600 CFM 22-in .(559mm) round or 14 1/2 (368mm) x 23 1/4-in.(591mm)rectangle.
   d. For airflow requirements above 1800 CFM, see Air Delivery table in Product Data literature for specific use of single side inlets. The use of both side inlets, a combination of 1 side and the bottom, or the bottom only will ensure adequate return air openings for airflow requirements above 1800 CFM at 0.5" W.C. ESP.

## DIMENSIONS – IN. (MM)

| UNIT SIZE | A | D | E |
|---|---|---|---|
| 060-12 | 17–1/2 (445) | 15–7/8 (403) | 16 (406) |
| 080-12 | 17–1/2 (445) | 15–7/8 (403) | 16 (406) |
| 080-16 | 17–1/2 (445) | 15–7/8 (403) | 16 (406) |
| 100-20 | 21 (533) | 19–3/8 (492) | 19–1/2 (495) |
| 120-20 | 24–1/2 (622) | 22–7/8 (581) | 23 (584) |



A09560

# CLEARANCE TO COMBUSTIBLES

58MEC

## INSTALLATION

- This forced air furnace is equipped for use with natural gas at altitudes 0 - 10,000 ft (0 - 3,050m), except 140 size furnaces are only approved for altitudes 0 - 7,000 ft. (0 - 2,135m).
- An accessory kit, supplied by the manufacturer, shall be used to convert to propane gas use or may be required for some natural gas applications.
- This furnace is for indoor installation in a building constructed on site. This furnace may be installed in a manufactured (mobile) home when stated on rating plate and using factory authorized kit..
- This furnace may be installed on combustible flooring in alcove or closet at **Minimum Inches Clearance To Combustible Construction** as described below.
- This furnace requires a special venting system. Refer to the installation instructions for parts list and method of installation. In the US this furnace is for use with schedule-40 PVC, PVC-DWV, CPVC, or ABS-DWV pipe, and must not be vented in common with other gas-fired appliances. In Canada, refer to installation instructions for vent materials. Construction through which vent/air intake pipes may be installed is maximum 24 inches (610 mm), minimum 3/4 inches (19 mm) thickness (including roofing materials).

- Cette fournaise à air pulsé est équipée pour utilisation avec gaz naturel et altitudes comprises entre 0 - 3,050m (0 - 10,000 pi),excepté queles fournaises de 140 taille sont pour altitudes comprises entre 0 - 2,135m (0 - 7,000pi).
- Utiliser une trousse de conversion, fournie par le fabricant, pour passer au gaz propane ou pour certaines installations au gaz naturel.
- Cette fournaise à air pulsé est pour installation à l´intérieur dans un bâtiment construit sur place. Cette fournaise à air pulse peut être installée dans une maison préfabriquée (maison mobile) si prescrit par la plaque signalétique et si'l on utilise une trousse specifiée par le fabricant.
- Cette fournaise peut être installée sur un plancher combustible dans un enfoncement ou un placard en observant les **Dégagement Minimum En Pouces Avec Éléments De Construction Combustibles.**
- Cette fournaise nécessite un système d´évacuation spécial. La méthode d´installation et la liste des pièces nécessaires figurent dans les instructions d´installation. Aux Etats-Unis, cette fournaise doit s´utiliser avec la tuyauterie des nomenclatures 40 PVC, PVC-DWV, CPVC, ou ABS-DWV et elle ne peut pas être ventilée conjointment avec d´autres appareils à gaz. Au Canada, referer aux instructions d'installation pour lex matériaux à ventiler. Épaisseur de la construction au travers de laquelle il est possible de faire passer les tuyaux d'aération (admission/évacuation): 24 po (610 mm) maximum, 3/4 po (19mm) minimum (y compris la toiture).

For upflow and downflow applications, furnace must be installed level, or pitched within 1/2" (12.7mm) of level. For a horizontal application, the furnace must be pitched minimum 1/4" (6.35mm) to maximum of 1/2" (12.7mm) forward for proper drainage. See Installation Manual for IMPORTANT unit support details on horizontal applications.

Pour des applications de flux ascendant et descendant, la fournaise doit être installée de niveau ou inclinée à pas plus de 1/2" (12.7mm) du niveau. Pour une application horizontale, la fournaise doit être inclinée entre minimum 1/4" (6.35mm) et maximum 1/2" (12.7mm) du niveau pour le drainage approprié. En cas d´installation en position horizontale, consulter les renseignements IMPORTANTS sur le support dans le manuel d´installation.

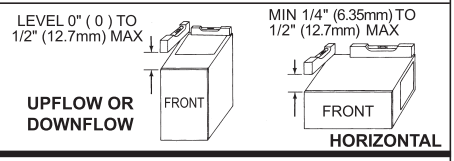


## MINIMUM INCHES CLEARANCE TO COMBUSTIBLE CONSTRUCTION

**ALL POSITIONS:**

* Minimum front clearance for service 24 inches (610mm).

† † 140 size furnaces require 1 inch back clearance to combustible materials.

**DOWNFLOW POSITIONS:**

† For installation on combustible floors only when installed on special base No. KGASB0201ALL or NAHA01101SB, Coil Assembly, Part No. CAR, CAP, CNPV, CNRV or Coil Casing, Part No. KCAKC, or WENC or WTNC.

**HORIZONTAL POSITIONS:**

Line contact is permissible only between lines formed by intersections of top and two sides of furnace jacket, and building joists, studs, or framing.

§ Clearance shown is for air inlet and air outlet ends.

Ø 120 and 140 size furnaces require 1 inch bottom clearance to combustible materials.

## DÉGAGEMENT MINIMUM EN POUCES AVEC ÉLÉMENTS DE CONSTRUCTION COMBUSTIBLES

**POUR TOUS LES POSITIONS:**

* Dégagement avant minimum de 24 po (610mm) pour l´entretien.

† † Pour les fournaises de 140 taille, 1 po (25mm) dégagement des matériaux combustibles est requis au-arriere.

**POUR LA POSITION COURANT DESCENDANT:**

† Pour l´installation sur le plancher combustible seulement quand on utilise la base spéciale, pièce nº KGASB0201ALL ou NAHA01101SB, l´ensemble serpentin, pièce nº CAR, CAP, CNPV, CNRV, ou le carter de serpentin, pièce nº KCAKC ou WENC ou WTNC.

**POUR LA POSITION HORIZONTALE:**

Le contact n´est permis qúentre les lignes formées par les intersections du dessus et des deuxcôtés de la chemise de la fournaise, et des solives, des montants ou de la charpente du bâtiment.

§ La distance indiquée concerne l´extrémité du tuyau d´arrivée d´air et l´extrémité du tuyau de sortie d´air.

Ø Pour les fournaises de 120 et 140 taille, 1 po (25mm) dégagement des matériaux combustibles est requis au-dessous.

335122-201 REV. B LIT TOP

This furnace is approved for UPFLOW, DOWNFLOW and HORIZONTAL installations.

Cette fournaise est approuvée pour l´installation HORIZONTALE et la circulation d´air VERS LE HAUT et VERS LE BAS.

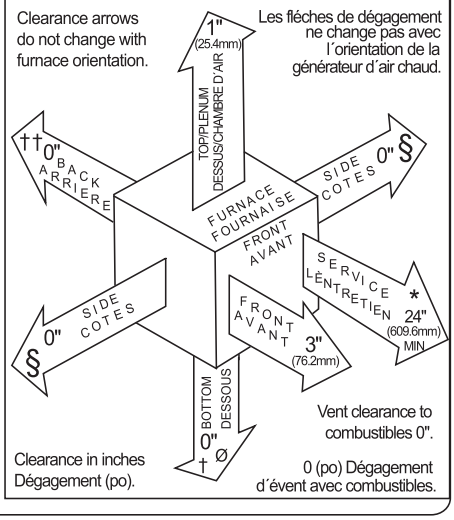


A08435

Use of the AHRI Certified TM Mark indicates a manufacturer's participation in the program. For verification of certification for individual products, go to www.ahridirectory.org.

# SPECIFICATIONS

| UNIT SIZE | | | 060−12 | 080−12 | 080−16 | 100−20 | 120−20 |
|---|---|---|---|---|---|---|---|
| CAPACITY* Direct Vent (2 − pipe) (Shaded capacities are specified on the rating plate) | Low | Upflow | 37000 | 49000 | 49000 | 61000 | 73000 |
| | | Downflow | 36000 | 49000 | 49000 | 61000 | 73000 |
| | | Horizontal | 36000 | 49000 | 49000 | 61000 | 73000 |
| | High | Upflow | 56000 | 75000 | 75000 | 93000 | 113000 |
| | | Downflow | 56000 | 75000 | 75000 | 93000 | 112000 |
| | | Horizontal | 56000 | 74000 | 74000 | 93000 | 112000 |
| CAPACITY* Non−Direct vent (1−pipe) | Low | Upflow | 36000 | 49000 | 49000 | 61000 | 73000 |
| | | Downflow | 36000 | 49000 | 49000 | 61000 | 73000 |
| | | Horizontal | 36000 | 48000 | 49000 | 61000 | 73000 |
| | High | Upflow | 56000 | 75000 | 75000 | 94000 | 113000 |
| | | Downflow | 56000 | 75000 | 75000 | 93000 | 112000 |
| | | Horizontal | 56000 | 74000 | 74000 | 93000 | 112000 |
| AFUE* Direct Vent (2−pipe) Nonweatherized ICS | | Upflow | 92.5 | | | | |
| | | Downflow | 91 | | | | |
| | | Horizontal | 92.1 | | | | |
| AFUE* Non−Direct Vent (1−pipe) Nonweatherized ICS | | Upflow | 92.1 | | | | |
| | | Downflow | 90.7 | | | | |
| | | Horizontal | 91.7 | | | | |
| Input Btuh † | Low | | 39000 | 52000 | 52000 | 65000 | 78000 |
| | High | | 60000 | 80000 | 80000 | 100000 | 120000 |
| CERTIFIED TEMPERATURE RANGE(F) | High | | 30−60 16.5−33) | 40−70 (22−38.5) | 30−60 16.5−33) | 30−60 16.5−33) | 40−70 (22−38.5) |
| | Low | | 20−50 (11−27.5) | 30−60 16.5−33) | 30−60 16.5−33) | 30−60 16.5−33) | 30−60 16.5−33) |
| CERTIFIED EX STATIC PRESSURE (IN. W.C.) | | Heating | 0.12 | 0.15 | 0.15 | 0.20 | 0.20 |
| | | Cooling | 0.50 | 0.50 | 0.50 | 0.50 | 0.50 |
| AIRFLOW (CFM)‡ | | High Heat | 1040 | 1180 | 1450 | 1890 | 2065 |
| | | Low Heat | 635 | 835 | 910 | 935 | 1425 |
| | | Cooling | 1250 | 1240 | 1620 | 1635 | 1925 |
| **ELECTRICAL** | | | | | | | |
| Unit Volts−Hertz−Phase | | | 115−60−1 | | | | |
| Operating Voltage Range Min−Max** | | | 104 − 127 | | | | |
| Maximum Unit Amps | | | 8.2 | 8.3 | 9.9 | 12.1 | 12.4 |
| Unit Ampacity†† | | | 11 | 11 | 13 | 15.9 | 16.2 |
| Minimum Wire Size | | | 14 | 14 | 14 | 12 | 12 |
| Maximum Wire Length (Ft / M)‡‡ | | | 33 (10.0) | 33 (10.0) | 28 (8.5) | 36 (11.0) | 35 (10.7) |
| Maximum Fuse Size or Ckt Bkr Amps††† | | | 15 | 15 | 20 | 20 | 20 |
| Transformer (24v) | | | 40va | | | | |
| External Control Power Available | | Heating | 19 | | | | |
| | | Cooling | 35 | | | | |
| Air Conditioning Blower Relay | | | Standard | | | | |
| CONTROLS | | | | | | | |
| Limit Control | | | SPST | | | | |
| Heating Blower Control (Off Delay) | | | Selectable 90, 120, 150, or 180 seconds | | | | |
| Burners (Monoport) | | | 3 | 4 | 4 | 5 | 6 |
| Gas Connection Size | | | 1/2−in. (13 mm) NPT | | | | |
| **GAS CONTROLS** | | | | | | | |
| 2−Stage Redundant Gas Valve | Manufacturer | | White−Rodgers | | | | |
| | Min. Inlet Pressure (in. wc) | | 4.5 (Natural Gas) | | | | |
| | Max. Inlet Pressure (In. wc) | | 13.5 (Natural Gas) | | | | |
| Ignition Device | | | Hot Surface | | | | |
| **BLOWER DATA** | | | | | | | |
| Direct−Drive Motor HP ECM−X−13 | | | 1/2 | 1/2 | 3/4 | 1 | 1 |
| Motor Full Load Amps | | | 6.8 | 6.8 | 8.4 | 10.9 | 10.9 |
| RPM (Nominal)−Speeds | | | 1050−5 | 1050−5 | 1050−5 | 1050−5 | 1050−5 |
| Blower Wheel Diameter x Width − In. (mm) | | | 10 X 7 (254X178) | 10 X 7 (254 X 178) | 11 X 8 (279 X 203) | 11 X 10 (203 X 254) | 11 X 10 (203 X 254) |
| Filter Size (In. / mm)−Permanent Washable | | | (1) 16 X 25 X 3/4 (406 X 635 X 19) | | | (1) 20 X 25 X 3/4 (508 X 635 X 19) | (1) 24 X 25 X 3/4 (610 X 635 X 19) |

See notes at end of table.

58MEC

| FACTORY−AUTHORIZED AND LISTED DEALER−INSTALLED OPTIONS | |
|---|---|
| Gas Conversion Kit − Natural−to−Propane | KGANP4901AAA |
| Gas Conversion Kit − Propane−to−Natural | KGAPN4701AAA |
| Twinning Kit | N/A |
| Downflow Base*** | KGASB0301ALL |
| Vent Termination Kit (Bracket Only for 2 Pipes) | 2−in. (51 mm)−KGAVT0101BRA 3−in. (76 mm)−KGAVT0201BRA |
| Concentric Vent Termination Kit (Single Exit) | 2−in. (51 mm)−KGAVT0701CVT 3−in. (76 mm)−KGAVT0801CVT |
| Condensate Freeze Protection Kit | KGAHT0101CFP |
| Condensate Neutralizer Kit (Obtained thru RCD) | P908−0001 |
| Vent Exhaust Pipe External Trap Kit | KGAET0106ETK |
| Door Gasket Kit | KGBAC011DGK |
| Unframed Filter, Permanent Washable 3/4” (19 mm) 16 x 25 (406 x 635) | KGAWF1306UFR |
| Unframed Filter, Permanent Washable 3/4” (19 mm) 24 x 25 (610 x 635) | KGAWF1506UFR |

*U.S.A. − Gas input ratings are certified for elevations to 2000 ft. (610 M). For elevations above 2000 ft (610 M), reduce ratings 2% for each 1000 ft. (305 M) above sea level. In Canada, derate the unit 5% for elevations 2000 to 4500 ft. (610 to 1372 M) above sea level.

†Capacity and AFUE in accordance with U.S. Government DOE test procedures Effective November 10, 1997.

‡ •Airflow shown is with factory−supplied 3/4−in. (19 mm) washable filter(s).
•For air delivery above 1800 CFM, see Air Delivery table for other options.
•An airflow reduction of up to 7% may occur when using the factory−specified 4−5/16−in. (110 mm) wide, high efficiency media filter.
•For best furnace efficiency when using the 4−5/16−in. (110 mm) wide media filter, adjust the blower speed tap to near the mid−point of the rise range.

**Permissible voltage limits for proper furnace operation.

††Unit ampacity = 125% of largest component’s full load amps plus 100% of all other potential operating components (EAC, humidifier, etc.)

‡‡Length show in measured one way along wire path between unit and service panel for maximum 2% voltage drop.

***Required for downflow installation on combustible floors when no coil box is used, or when any coil box other than a CNPV, CAPV, CAP, or CAR cased coil is used.

N/A − Not Applicable

ICS − Isolated Combustion System

# MAXIMUM ALLOWABLE PIPE LENGTH - FT (M)

| ALTITUDE FT (M) | UNIT SIZE (BTUH) | DIRECT VENT (2-PIPE) ONLY | | NON-DIRECT VENT (1-PIPE) ONLY | NUMBER OF 90° ELBOWS | | | | | |
|---|---|---|---|---|---|---|---|---|---|---|
| | | TERMINATION TYPE | PIPE DIA – IN. (mm)* | PIPE DIA – IN. (mm)* | 1 | 2 | 3 | 4 | 5 | 6 |
| 0 to 2000 (0 to 610) | 60,000 | 2 Pipe or 2-in Concentric | 1-1/2 (38) | 1-1/2 (38) | 20 (6.1) | 15 (4.6) | 10 (3.0) | 5 (1.5) | NA | NA |
| | | | 2 (51) | 2 (51) | 70 (21.3) | 70 (21.3) | 70 (21.3) | 70 (21.3) | 70 (21.3) | 70 (21.3) |
| | 80,000 | 2 Pipe or 2-in Concentric | 1-1/2 (38) | 1-1/2 (38) | 10 (3.0) | NA | NA | NA | NA | NA |
| | | | 2 (51) | 2 (51) | 55 (16.8) | 50 (15.2) | 35 (10.7) | 30 (9.1) | 30 (9.1) | 20 (6.1) |
| | | | 2-1/2 (64) | 2-1/2 (64) | 70 (21.3) | 70 (21.3) | 70 (21.3) | 70 (21.3) | 70 (21.3) | 70 (21.3) |
| | 100,000 | 2 Pipe or 3-in Concentric | 2 (51) | 2 (51) | 5 (1.5) | NA | NA | NA | NA | NA |
| | | | 2-1/2 (64) | 2-1/2 (64) | 40 (12.2) | 30 (9.1) | 20 (6.1) | 20 (6.1) | 10 (3.0) | NA |
| | | | 3 (76) | 3 (76) | 70 (21.3) | 70 (21.3) | 70 (21.3) | 70 (21.3) | 70 (21.3) | 70 (21.3) |
| | 120,000 | 2 Pipe or 3-in. Concentric | 2-1/2 (64) one disk | 2-1/2 (64)# | 10 (3.0) | NA | NA | NA | NA | NA |
| | | | 3 (76)† | NA | 45 (13.7) | 40 (12.2) | 35 (10.7) | 30 (9.1) | 25 (7.6) | 20 (6.1) |
| | | | 3 (76) † no disk | 3 (76)†# | 70 (21.3) | 70 (21.3) | 70 (21.3) | 70 (21.3) | 70 (21.3) | 70 (21.3) |

| ALTITUDE FT (M) | UNIT SIZE (BTUH) | DIRECT VENT (2-PIPE) ONLY | | NON-DIRECT VENT (1-PIPE) ONLY | NUMBER OF 90° ELBOWS | | | | | |
|---|---|---|---|---|---|---|---|---|---|---|
| | | TERMINATION TYPE | PIPE DIA – IN. (mm)* | PIPE DIA – IN. (mm)* | 1 | 2 | 3 | 4 | 5 | 6 |
| 2001 to 3000‡ (610 to 914) | 60,000 | 2 Pipe or 2-in Concentric | 1-1/2 (38) | 1-1/2 (38) | 17 (5.2) | 12 (3.7) | 7 (2.1) | NA | NA | NA |
| | | | 2 (51) | 2 (51) | 70 (21.3) | 67 (20.4) | 66 (20.1) | 61 (18.6) | 61 (18.6) | 61 (18.6) |
| | 80,000 | 2 Pipe or 2-in Concentric | 2 (51) | 2 (51) | 49 (14.9) | 44 (13.4) | 30 (9.1) | 25 (7.6) | 25 (7.6) | 15 (4.6) |
| | | | 2-1/2 (64) | 2-1/2 (64) | 70 (21.3) | 70 (21.3) | 70 (21.3) | 70 (21.3) | 70 (21.3) | 70 (21.3) |
| | 100,000 | 2 Pipe or 3-in Concentric | 2-1/2 (64) | 2-1/2 (64) | 35 (10.7) | 26 (7.9) | 16 (4.9) | 16 (4.9) | 6 (1.8) | NA |
| | | | 3 (76) | 3 (76) | 70 (21.3) | 70 (21.3) | 70 (21.3) | 70 (21.3) | 66 (20.1) | 61 (18.6) |
| | 120,000 | 2 Pipe or 3-in. Concentric | 3 (76) | NA | 14 (4.3) | 9 (2.7) | NA | NA | NA | NA |
| | | | NA | 3 (76)†# | 63 (19.2) | 62 (18.9) | 62 (18.9) | 61 (18.6) | 61 (18.6) | 61 (18.6) |
| | | | 3 (76)† no disk | NA | 70 (21.3) | 70 (21.3) | 63 (19.2) | 56 (17.1) | 50 (15.2) | 43 (13.1) |
| | | | 4 (102)† no disk | 4 (102)† no disk | 70 (21.3) | 70 (21.3) | 70 (21.3) | 70 (21.3) | 70 (21.3) | 70 (21.3) |

| ALTITUDE FT (M) | UNIT SIZE (BTUH) | DIRECT VENT (2-PIPE) ONLY | | NON-DIRECT VENT (1-PIPE) ONLY | NUMBER OF 90° ELBOWS | | | | | |
|---|---|---|---|---|---|---|---|---|---|---|
| | | TERMINATION TYPE | PIPE DIA – IN (mm)* | PIPE DIA – IN (mm)* | 1 | 2 | 3 | 4 | 5 | 6 |
| 3001 to 4000‡ (914 to 1219) | 60,000 | 2 Pipe or 2-in Concentric | 1-1/2 (38) | 1-1/2 (38) | 16 (4.9) | 11 (3.4) | 6 (1.8) | NA | NA | NA |
| | | | 2 (51) | 2 (51) | 68 (20.7) | 63 (19.2) | 62 (18.9) | 57 (17.4) | 57 (17.4) | 56 (17.1) |
| | 80,000 | 2 Pipe or 2-in Concentric | 2 (51) | 2 (51) | 46 (14.) | 41 (12.5) | 28 (8.5) | 23 (7.0) | 22 (6.7) | 13 (4.) |
| | | | 2-1/2 (64) | 2-1/2 (64) | 70 (21.3) | 70 (21.3) | 70 (21.3) | 70 (21.3) | 70 (21.3) | 70 (21.3) |
| | 100,000 | 2 Pipe or 3-in Concentric | 2-1/2 (64) | 2-1/2 (64) | 33 (10.1) | 24 (7.3) | 15 (4.6) | 14 (4.3) | 5 (1.5) | NA |
| | | | 3 (76) | 3 (76) | 70 (21.3) | 70 (21.3) | 70 (21.3) | 66 (20.1) | 61 (18.6) | 56 (17.1) |
| | 120,000 | 2 Pipe or 3-in. Concentric | 3 (76)† no disk | NA | 65 (19.8) | 58 (17.7) | 51 (15.5) | 44 (13.4) | 38 (11.6) | 31 (9.4) |
| | | | NA | 3 (76)†# | 59 (18.0) | 59 (18.0) | 58 (17.7) | 57 (17.4) | 57 (17.4) | 56 (17.1) |
| | | 4† no disk | 4 (102)† no disk | 4 (102) † no disk | 70 (21.3) | 70 (21.3) | 70 (21.3) | 70 (21.3) | 70 (21.3) | 70 (21.3) |

# MAXIMUM ALLOWABLE PIPE LENGTH - FT (M) CONT.

| ALTITUDE FT (M) | UNIT SIZE (BTUH) | DIRECT VENT (2-PIPE) ONLY | | NON-DIRECT VENT (1-PIPE) ONLY | NUMBER OF 90° ELBOWS | | | | | |
|---|---|---|---|---|---|---|---|---|---|---|
| | | TERMINATION TYPE | PIPE DIA – IN. (mm)* | PIPE DIA – IN. (mm)* | 1 | 2 | 3 | 4 | 5 | 6 |
| 4001 to 5000‡ (1219 to 1524) | 60,000 | 2 Pipe or 2-in Concentric | 1-1/2 (38) | 1-1/2 (38) | 15 (4.6) | 10 (3.0) | 5 (1.5) | NA | NA | NA |
| | | | 2 (51) | 2 (51) | 64 (19.5) | 59 (18.0) | 58 (17.7) | 53 (16.2) | 52 (15.8) | 52 (15.8) |
| | 80,000 | 2 Pipe or 2-in Concentric | 2 (51) | 2 (51) | 44 (13.4) | 39 (11.9) | 26 (7.9) | 21 (6.4) | 20 (6.1) | 11 (3.4) |
| | | | 2-1/2 (64) | 2-1/2 (64) | 70 (21.3) | 70 (21.3) | 70 (21.3) | 70 (21.3) | 70 (21.3) | 70 (21.3) |
| | 100,000 | 2 Pipe or 3-in Concentric | 2-1/2 (64) | 2-1/2 (64) | 31 (9.4) | 22 (6.7) | 13 (4.0) | 12 (3.7) | NA | NA |
| | | | 3 (76) | 3 (76) | 70 (21.3) | 70 (21.3) | 67 (20.4) | 62 (18.9) | 57 (17.4) | 52 (15.8) |
| | 120,000 | 2 Pipe or 3-in. Concentric | 3 (76)† no disk | NA | 53 (16.2) | 46 (14.0) | 40 (12.2) | 33 (10.1) | 26 (7.9) | 20 (6.1) |
| | | | NA | 3 (76)†# | 56 (17.1) | 55 (16.8) | 54 (16.5) | 53 (16.2) | 52 (15.8) | 52 (15.8) |
| | | | 4 (102)† no disk | 4 (102)† no disk | 70 (21.3) | 70 (21.3) | 70 (21.3) | 70 (21.3) | 70 (21.3) | 70 (21.3) |

| ALTITUDE FT (M) | UNIT SIZE (BTUH) | DIRECT VENT (2-PIPE) ONLY | | NON-DIRECT VENT (1-PIPE) ONLY | NUMBER OF 90° ELBOWS | | | | | |
|---|---|---|---|---|---|---|---|---|---|---|
| | | TERMINATION TYPE | PIPE DIA – IN. (mm)* | PIPE DIA – IN. (mm)* | 1 | 2 | 3 | 4 | 5 | 6 |
| 5001 to 6000‡ (1524 to 1829) | 60,000 | 2 Pipe or 2-in Concentric | 1-1/2 (38) | 1-1/2 (38) | 14 (4.3) | 9 (2.7) | NA | NA | NA | NA |
| | | | 2 (51) | 2 (51) | 60 (18.3) | 55 (16.8) | 54 (16.5) | 49 (14.9) | 48 (14.6) | 47 (14.3) |
| | 80,000 | 2 Pipe or 2-in Concentric | 2 (51) | 2 (51) | 41 (12.5) | 36 (11.0) | 23 (7.0) | 18 (5.5) | 17 (5.2) | 8 (2.4) |
| | | | 2-1/2 (64) | 2-1/2 (64) | 70 (21.3) | 70 (21.3) | 70 (21.3) | 70 (21.3) | 70 (21.3) | 70 (21.3) |
| | 100,000 | 2 Pipe or 3-in Concentric | 2-1/2 (64) | 2-1/2 (64) | 29 (8.8) | 21 (6.4) | 12 (3.7) | 11 (3.4) | NA | NA |
| | | | 3 (76) | 3 (76) | 70 (21.3) | 67 (20.4) | 62 (18.9) | 57 (17.4) | 52 (15.8) | 47 (14.3) |
| | 120,000 | 2 Pipe or 3-in. Concentric | 3 (76)† no disk | NA | 42 (12.8) | 35 (10.7) | 29 (8.8) | 22 (6.7) | 15 (4.6) | 9 (2.7) |
| | | | NA | 3 (76)†# | 53 (16.2) | 52 | 50 (15.2) | 49 (14.9) | 48 (14.6) | 47 (14.3) |
| | | | 4 (102)† no disk | 4 (102)† no disk | 70 (21.3) | 70 (21.3) | 70 (21.3) | 70 (21.3) | 70 (21.3) | 70 (21.3) |

| ALTITUDE FT (M) | UNIT SIZE (BTUH) | DIRECT VENT (2-PIPE) ONLY | | NON-DIRECT VENT (1-PIPE) ONLY | NUMBER OF 90° ELBOWS | | | | | |
|---|---|---|---|---|---|---|---|---|---|---|
| | | TERMINATION TYPE | PIPE DIA – IN. (mm)* | PIPE DIA – IN. (mm)* | 1 | 2 | 3 | 4 | 5 | 6 |
| 6001 to 7000‡ (1829 to 2134) | 60,000 | 2 Pipe or 2-in Concentric | 1-1/2 (38) | 1-1/2 (38) | 13 (4.0) | 8 (2.4) | NA | NA | NA | NA |
| | | | 2 (51) | 2 (51) | 57 (17.4) | 52 (15.8) | 50 (15.2) | 45 (13.7) | 44 (13.4) | 43 (13.1) |
| | 80,000 | 2 Pipe or 2-in Concentric | 2 (51) | 2 (51) | 38 (11.6) | 33 (10.1) | 21 (6.4) | 16 (4.9) | 15 (4.6) | 6 (1.8) |
| | | | 2-1/2 (64) | 2-1/2 (64) | 70 (21.3) | 70 (21.3) | 68 (20.7) | 67 (20.4) | 66 (20.1) | 64 (19.5) |
| | 100,000 | 2 Pipe or 3-in Concentric | 2-1/2 (64) | 2-1/2 (64) | 27 (8.2) | 19 (5.8) | 10 (3.0) | 9 (2.7) | NA | NA |
| | | | 3 (76) | 3 (76) | 68 (20.7) | 63 (19.2) | 58 (17.7) | 53 (16.2) | 48 (14.6) | 43 (13.1) |
| | 120,000 | 2 Pipe or 3-in. Concentric | 3 (76)† no disk | NA | 31 (9.4) | 24 (7.3) | 18 (5.5) | 11 (3.4) | NA | NA |
| | | | NA | 3 (76)†# | 49 (14.9) | 48 (14.6) | 47 (14.3) | 45 (13.7) | 44 (13.4) | 43 (13.1) |

See notes at end of table.

# MAXIMUM ALLOWABLE PIPE LENGTH - FT (M) CONT.

| ALTITUDE FT (M) | UNIT SIZE (BTUH) | DIRECT VENT (2-PIPE) ONLY | | NON-DIRECT VENT (1-PIPE) ONLY | NUMBER OF 90° ELBOWS | | | | | |
|---|---|---|---|---|---|---|---|---|---|---|
| | | TERMINATION TYPE | PIPE DIA – IN. (mm)* | PIPE DIA – IN. (mm)* | 1 | 2 | 3 | 4 | 5 | 6 |
| 7001 to 8000‡ (2134 to 2438) | 60,000 | 2 Pipe or 2-in Concentric | 1-1/2 (38) | 1-1/2 (38) | 12 (3.7) | 7 (2.1) | NA | NA | NA | NA |
| | | | 2 (51) | 2 (51) | 53 (16.2) | 48 (14.6) | 46 (14.) | 41 (12.5) | 40 (12.2) | 38 (11.6) |
| | 80,000 | 2 Pipe or 2-in Concentric | 2 (51) | 2 (51) | 36 (11.0) | 31 (9.4) | 19 (5.8) | 14 (4.3) | 12 (3.7) | NA |
| | | | 2-1/2 (64) | 2-1/2 (64) | 66 (20.1) | 65 (19.8) | 63 (19.2) | 62 (18.9) | 60 (18.3) | 59 (18.0) |
| | 100,000 | 2 Pipe or 3-in Concentric | 2-1/2 (64) | 2-1/2 (64) | 25 (7.6) | 17 (5.2) | 8 (2.4) | 7 (2.1) | NA | NA |
| | | | 3 (76) | 3 (76) | 63 (19.2) | 58 (17.7) | 53 (16.2) | 48 (14.6) | 43 (13.1) | 38 (11.6) |
| | 120,000 | 2 Pipe or 3-in. Concentric | 3 (76)† no disk | NA | 20 (6.1) | 13 (4.0) | 7 (2.1) | NA | NA | NA |
| | | | NA | 3 (76)†# | 46 (14.) | 44 (13.4) | 43 (13.1) | 41 (12.5) | 40 (12.2) | 38 (11.6) |
| | | | 4 (102)† no disk | 4 (102)† no disk | 61 (18.6) | 56 (17.1) | 51 (15.5) | 46 (14.0) | 41 (12.5) | 36 (11.0) |

| ALTITUDE FT (M) | UNIT SIZE (BTUH) | DIRECT VENT (2-PIPE) ONLY | | NON-DIRECT VENT (1-PIPE) ONLY | NUMBER OF 90° ELBOWS | | | | | |
|---|---|---|---|---|---|---|---|---|---|---|
| | | TERMINATION TYPE | PIPE DIA – IN. (mm)* | PIPE DIA – IN. (mm)* | 1 | 2 | 3 | 4 | 5 | 6 |
| 8001 to 9000‡ (2438 to 2743) | 60,000 | 2 Pipe or 2-in Concentric | 1-1/2 (38) | 1-1/2 (38) | 11 (3.4) | 6 (1.8) | NA | NA | NA | NA |
| | | | 2 (51) | 2 (51) | 49 (14.9) | 44 (13.4) | 42 (12.8) | 37 (11.3) | 35 (10.7) | 34 (10.4) |
| | 80,000 | 2 Pipe or 2-in Concentric | 2 (51) | 2 (51) | 33 (10.1) | 28 (8.5) | 17 (5.2) | 12 (3.7) | 10 (3.0) | NA |
| | | | 2-1/2 (64) | 2-1/2 (64) | 62 (18.9) | 60 (18.3) | 58 (17.7) | 56 (17.1) | 55 (16.8) | 53 (16.2) |
| | 100,000 | 2 Pipe or 3-in Concentric | 2-1/2 (64) | 2-1/2 (64) | 23 (7.0) | 15 (4.6) | 7 (2.1) | 5 (1.5) | NA | NA |
| | | | 3 (76) | 3 (76) | 59 (18.0) | 54 (16.5) | 49 (14.9) | 44 (13.4) | 39 (11.9) | 34 (10.4) |
| | 120,000 | 2 Pipe or 3-in. Concentric | 3 (76)† no disk | NA | 10 (3.) | NA | NA | NA | NA | NA |
| | | | NA | 3 (76)†# | 43 (13.1) | 41 (12.5) | 39 (11.9) | 37 (11.3) | 35 (10.7) | 34 (10.4) |
| | | | 4 (102)† no disk | 4† no disk | 35 (10.7) | 30 (9.1) | 25 (7.6) | 20 (6.1) | 15 (4.6) | 10 (3.0) |

| ALTITUDE FT (M) | UNIT SIZE (BTUH) | DIRECT VENT (2-PIPE) ONLY | | NON-DIRECT VENT (1-PIPE) ONLY | NUMBER OF 90° ELBOWS | | | | | |
|---|---|---|---|---|---|---|---|---|---|---|
| | | TERMINATION TYPE | PIPE DIA – IN. (mm)* | PIPE DIA – IN. (mm)* | 1 | 2 | 3 | 4 | 5 | 6 |
| 9001 to 10,000‡ (2743 to 3048) | 60,000 | 2 Pipe or 2-in Concentric | 2 (51) | 2 (51) | 45 (13.7) | 40 (12.2) | 38 (11.6) | 33 (10.1) | 31 (9.4) | 29 (8.8) |
| | 80,000 | 2 Pipe or 2-in Concentric | 2 (51) | 2 (51) | 30 (9.1) | 25 (7.6) | 14 (4.3) | 9 (2.7) | 7 (2.1) | NA |
| | | | 2-1/2 (64) | 2-1/2 (64) | 57 (17.4) | 55 (16.8) | 53 (16.2) | 51 (15.5) | 49 (14.9) | 47 (14.3) |
| | 100,000 | 2 Pipe or 3-in Concentric | 2-1/2 (64) | 2-1/2 (64) | 21 (6.4) | 13 (4.0) | 5 (1.5) | NA | NA | NA |
| | | | 3 (76) | 3 (76) | 54 (16.5) | 49 (14.9) | 44 (13.4) | 39 (11.9) | 34 (10.4) | 29 (8.8) |
| | 120,000 | 2 Pipe or 3-in. Concentric | NA | 3 (76)†# | 39 (11.9) | 37 (11.3) | 35 (10.7) | 33 (10.1) | 31 (9.4) | 29 (8.8) |
| | | | 4 (102)† no disk | 4 (102)† no disk | 10 (3.0) | 5 (1.5) | NA | NA | NA | NA |

* Disk usage – Unless otherwise specified, use perforated disk assembly (factory-supplied in loose parts bag).
# If one disk is stated, separate 2 halves of perforated disk assembly and use shouldered disk half. When using shouldered disk half, install screen side toward inlet box.
† Wide radius elbow.
‡ Vent sizing for Canadian installations over 4500 ft (1370 M) above sea level are subject to acceptance by the local authorities having jurisdiction.
NA–Not Allowed; pressure switch will not make.
Elbows and pipe sections within the furnace casing and at the vent termination should not be included in vent length or elbow count.
The minimum pipe length is 5 ft (1.5 M) for all applications.
Use 3-in. (76 mm) diameter vent termination kit for installations requiring 4-in. (102 mm) diameter pipe.
**NOTES**:
Do not use pipe size greater than those specified in table or incomplete combustion, flame disturbance, or flame sense lockout may occur.
Size both the combustion–air and vent pipe independently, then use the larger diameter for both pipes.
Assume two 45° elbows equal one 90° elbow. Wide radius elbows are desirable and may be required in some cases.

## MAXIMUM ALLOWABLE EXPOSED VENT PIPE LENGTH - FT (M) WITH AND WITHOUT INSULATION IN WINTER DESIGN TEMPERATURE AMBIENT*

| UNIT SIZE | WINTER DESIGN TEMPERATURE °F (°C) | MAX PIPE DIAMETER – IN (mm) | WITHOUT INSULATION | WITH 3/8–IN. (10 mm) OR THICKER INSULATION† |
|---|---|---|---|---|
| 060 | 20 (−7) | 2 (51) | 44 (13.4) | 70 (21.3) |
| | 0 (−18) | 2 (51) | 21 (6.4) | 70 (21.3) |
| | −20 (−29) | 2 (51) | 20 (6.0) | 57 (17.3) |
| 080 | 20 (−7) | 2 (51) | 55 (16.7) | 55 (16.7) |
| | 0 (−18) | 2 (51) | 30 (9.1) | 55 (16.7) |
| | −20 (−29) | 2 (51) | 16 (4.8) | 55 (16.7) |
| | 20 (−7) | 2.5 (64) | 58 (17.6) | 70 (21.3) |
| | 0 (−18) | 2.5 (64) | 29 (8.8) | 70 (21.3) |
| | −20 (−29) | 2.5 (64) | 14 (4.2) | 67 (20.4) |
| 100 | 20 (−7) | 2.5 (64) | 40 (12.1) | 40 (12.1) |
| | 0 (−18) | 2.5 (64) | 38 (11.5) | 40 (12.1) |
| | −20 (−29) | 2.5 (64) | 21 (6.4) | 40 (12.1) |
| | 20 (−7) | 3 (76) | 63 (19.2) | 70 (21.3) |
| | 0 (−18) | 3 (76) | 30 (9.1) | 70 (21.3) |
| | −20 (−29) | 3 (76) | 12 (3.6) | 70 (21.3) |
| 120 | 20 (−7) | 3 (76) | 70 (21.3) | 70 (21.3) |
| | 0 (−18) | 3 (76) | 38 (11.5) | 70 (21.3) |
| | −20 (−29) | 3 (76) | 19 (5.7) | 70 (21.3) |
| | 20 (−7) | 4 (102) | 65 (19.8) | 70 (21.3) |
| | 0 (−18) | 4 (102) | 26 (7.9) | 70 (21.3) |
| | −20 (−29) | 4 (102) | 5 (1.5) | 65 (19.8) |

* Pipe length (ft / M) specified for maximum pipe lengths located in unconditioned spaces. Pipes located in unconditioned space cannot exceed total allowable pipe length as specified in Table.

† Insulation thickness based on R value of 3.5 per in.

## COMBUSTION-AIR PIPE FOR NON-DIRECT VENT (1-PIPE) APPLICATION (SIZES 040 THROUGH 120 ONLY)

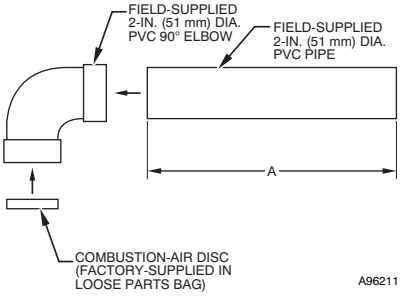


**LENGTH OF STRAIGHT PIPE PORTION OF COMBUSTION AIR INLET PIPE ASSEMBLY (IN.)**

| CASING WIDTH | A |
|---|---|
| 17-1/2 (445 mm) | 8-1/2 ± 1/2 (216 ± 13 mm) |
| 21 (533 mm) | 10-1/2 ± 1/2 (267 ± 13 mm) |
| 24-1/2 (622 mm) | 12 ± 1/2 (305 ± 13 mm) |

## CONCENTRIC VENT FOR DIRECT VENT (2-PIPE) APPLICATION (ALL MODEL SIZES)

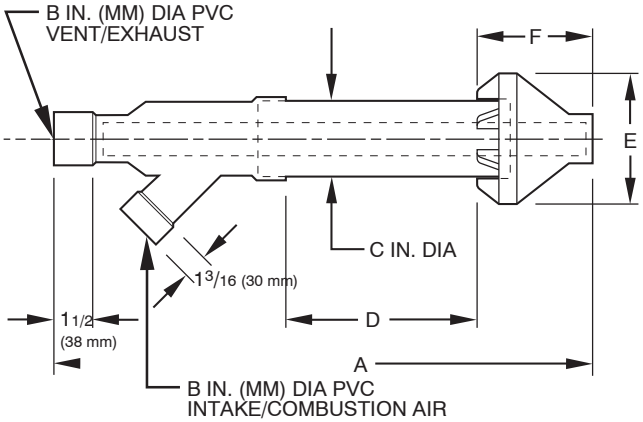


| KIT PART NO. | A* | B | C | D† | E | F |
|---|---|---|---|---|---|---|
| KGAVT0701CVT | 33-3/8 (848) | 2 (51) | 3-1/2 (89) | 16-5/8 (422) | 6-1/4 (159) | 5-3/4 (146) |
| KGAVT0801CVT | 38-7/8 (987) | 3 (76) | 4-1/2 (114) | 21-1/8 (537) | 7-3/8 (187) | 6-1/2 (165) |

*Dimension A will change accordingly as Dimension D is lengthened or shortened.

†Dimension D may be lengthened to 60−in. (1524 mm) maximum. Dimension D may also be shortened by cutting the pipes provided in the kit to 12− in. (305 mm) minimum.

# DOWNFLOW SUBBASE DIMENSIONS - IN. (MM)

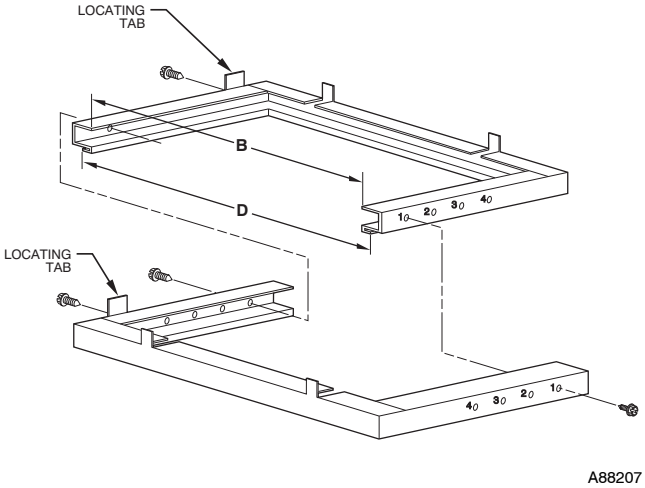


**Disassembled**

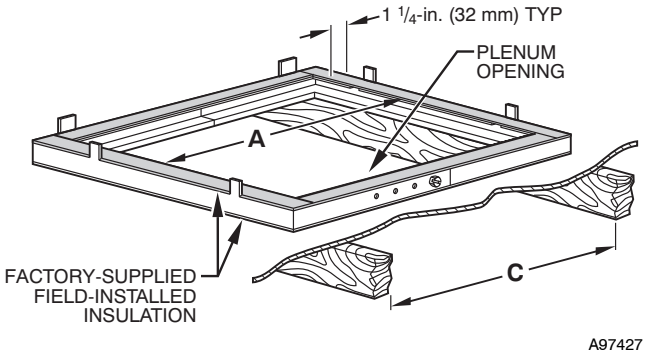


**Assembled**

| FURNACE CASING WIDTH IN. (mm) | FURNACE IN DOWNFLOW APPLICATION | PLENUM OPENING* IN. (mm) | | FLOOR OPENING IN. (mm) | | HOLE NO. FOR WIDTH ADJUSTMENT |
|---|---|---|---|---|---|---|
| | | A | B | C | D | |
| 17–1/2 (445 mm) | Furnace with or without Cased Coil Assembly or Coil Box | 15–1/8 (384 mm) | 19 (483 mm) | 16–3/4 (426 mm) | 20–3/8 (518 mm) | 3 |
| 21 (533 mm) | Furnace with or without Cased Coil Assembly or Coil Box | 18–5/8 (473 mm) | 19 (483 mm) | 20–1/4 (514 mm) | 20–3/8 (518 mm) | 2 |
| 24–1/2 (622 mm) | Furnace with or without Cased Coil Assembly or Coil Box | 22–1/8 (562 mm) | 19 (483 mm) | 23–3/4 (603 mm) | 20–3/8 (518 mm) | 1 |

*The plenum should be constructed 1/4 in. (6 mm) smaller in width and depth than the plenum dimensions shown above.

## AIR DELIVERY - CFM (WITH FILTER)

| UNIT SIZE | RETURN–AIR SUPPLY | SPEED | EXTERNAL STATIC PRESSURE (IN. W.C.) | | | | | | | | | |
|---|---|---|---|---|---|---|---|---|---|---|---|---|
| | | | 0.1 | 0.2 | 0.3 | 0.4 | 0.5 | 0.6 | 0.7 | 0.8 | 0.9 | 1 |
| 060–12 | SIDE/BOTTOM | 5(Gry) | 1430 | 1390 | 1345 | 1300 | 1250 | 1205 | 1150 | 1080 | 995 | 845 |
| | | 3(Blu) | 1240 | 1200 | 1145 | 1100 | 1040 | 975 | 915 | 860 | 790 | 730 |
| | | 4(Yel) | 1090 | 1030 | 980 | 935 | 850 | 800 | 730 | 665 | 590 | 525 |
| | | 1(Red) | 900 | 835 | 780 | 705 | 635 | 565 | 490 | 410 | 335 | 200 |
| | | 2(Org) | 805 | 620 | 440 | 380 | 300 | – | – | – | – | – |
| 080–12 | SIDE/BOTTOM | 5(Gry) | 1400 | 1360 | 1325 | 1285 | 1240 | 1205 | 1160 | 1125 | 1075 | 1000 |
| | | 3(Blu) | 1340 | 1300 | 1265 | 1215 | 1180 | 1135 | 1100 | 1055 | 1015 | 965 |
| | | 4(Yel) | 1195 | 1160 | 1115 | 1065 | 1025 | 985 | 935 | 895 | 850 | 800 |
| | | 1(Red) | 1025 | 980 | 935 | 880 | 835 | 795 | 745 | 685 | 635 | 585 |
| | | 2(Org) | 855 | 800 | 745 | 680 | 635 | 560 | 515 | 460 | 420 | 360 |
| 080–16 | SIDE/BOTTOM | 5(Gry) | 1720 | 1695 | 1690 | 1655 | 1620 | 1580 | 1540 | 1495 | 1465 | 1415 |
| | | 3(Blu) | 1565 | 1535 | 1530 | 1490 | 1450 | 1420 | 1375 | 1335 | 1295 | 1255 |
| | | 4(Yel) | 1330 | 1310 | 1270 | 1220 | 1180 | 1135 | 1095 | 1055 | 1010 | 970 |
| | | 2(Org) | 1210 | 1180 | 1135 | 1085 | 1035 | 995 | 950 | 910 | 865 | 810 |
| | | 1(Red) | 1110 | 1065 | 1005 | 960 | 910 | 865 | 820 | 770 | 720 | 670 |
| 100–20 | SIDE/BOTTOM | 5(Gry) | 2070 | 2020 | 1985 | 1925 | 1890 | 1850 | 1795 | 1755 | 1690 | 1610 |
| | | 3(Blu) | 1815 | 1775 | 1730 | 1690 | 1635 | 1595 | 1555 | 1500 | 1460 | 1410 |
| | | 4(Yel) | 1580 | 1535 | 1480 | 1440 | 1380 | 1380 | 1340 | 1285 | 1235 | 1185 |
| | | 2(Org) | 1380 | 1325 | 1275 | 1220 | 1220 | 1165 | 1105 | 1060 | 1000 | 960 |
| | | 1(Red) | 1170 | 1105 | 1055 | 985 | 935 | 870 | 805 | 765 | 705 | 660 |
| 120–20 | SIDE/BOTTOM | 5(Gry) | 2250 | 2205 | 2155 | 2110 | 2065 | 2020 | 1970 | 1925 | 1870 | 1790 |
| | | 3(Blu) | 2130 | 2085 | 2030 | 1980 | 1925 | 1880 | 1830 | 1775 | 1730 | 1675 |
| | | 4(Yel) | 1890 | 1835 | 1790 | 1740 | 1690 | 1640 | 1590 | 1535 | 1480 | 1435 |
| | | 1(Red) | 1640 | 1585 | 1525 | 1475 | 1425 | 1365 | 1315 | 1260 | 1200 | 1140 |
| | | 2(Org) | 1420 | 1370 | 1305 | 1255 | 1190 | 1135 | 1065 | 1010 | 940 | 880 |

**NOTES**:
* Airflow shown is with factory supplied 3/4–in. (19 mm) washable filter.*A filter is required for each return air opening.
*An airflow reduction of up to 7% may occur when using the factory–specified 4–5/16–in. (110 mm) wide, high efficiency media filter.
*For best furnace efficiency when using the 4 5/16–in. (110 mm) wide media filter, adjust blower speed tap to near the mid–point of the rise range.
*For horizontal and downflow applications, use one side or bottom or bottom only as an airflow reference.



Copyright 2010 Carrier Corp. • 7310 W. Morris St. • Indianapolis, IN 46231 Printed in U.S.A. Edition Date: 09/10 **Catalog No: 58MEC–02PD**

**Manufacturer reserves the right to change, at any time, specifications and designs without notice and without obligations.** Replaces: 58MEC–01PD