# C5A8T, H5A8T, T5A8T
# Split-System 2-Stage Air Conditioner
# With R-454B Refrigerant
# 2 - 5 TONS

# Installation Instructions

**NOTE:** For use with R-454B indoor units only. Read the entire instruction manual before starting the installation.


SAFETY CONSIDERATIONS . . . . . 1
GENERAL . . . . . 1
INSTALLATION . . . . . 2
Check Equipment and Job Site . . . . . 2
Install on a Solid, Level Mounting Pad . . . . . 2
Clearance Requirements . . . . . 3
Operating Ambient. . . . . 3
Make Piping Connections . . . . . 3
MANDATORY PIPING REQUIREMENTS. . . . . 5
Make Electrical Connections . . . . . 6
Compressor Crankcase Heater . . . . . 7
Install Electrical Accessories . . . . . 7
Check OAT Thermistor and OCT Thermistor Attachments . . . . . 7
Airflow Setup with Communicating Furnace or Fan Coil. . . . . 8
Airflow Setup with Non-Communicating Furnace or Fan Coil. . . 8
Start-Up. . . . . 9
Communicating Start Up . . . . . 9
Non-Communicating Start Up . . . . . 11
CHECK CHARGE (Non-Communicating) . . . . . 12
Final Charge Checks
(Communicating and Non-Communicating) . . . . . 12
GENERAL SEQUENCE OF OPERATION
Standard Thermostat . . . . . 13
SYSTEM FUNCTIONS AND SEQUENCE OF OPERATION . . . 13
Control Board . . . . . 14
TROUBLESHOOTING . . . . . 14
MAJOR COMPONENTS. . . . . 18
FINAL CHECKS . . . . . 18
REPAIRING REFRIGERANT CIRCUIT . . . . . 18
CARE AND MAINTENANCE . . . . . 18
TRAINING . . . . . 18


## SAFETY CONSIDERATIONS

The following considerations are critical to upholding safety during installation:

**IMPORTANT:** This appliance shall only be installed by EPA qualified personnel having appropriate certification. This appliance is not intended for use by persons (including children) with reduced physical, sensory, or mental capabilities or lack of experience and knowledge, unless they have been given supervision or instruction concerning use of the appliance by a person responsible for their safety.

Improper installation, adjustment, alteration, service, maintenance, or use can cause explosion, fire, electrical shock, or other conditions which may cause death, personal injury, or property damage. Consult a qualified installer, service agency, or your distributor or branch for information or assistance. The qualified installer or agency must use factory-authorized kits or accessories when modifying this product. Refer to the individual instructions packaged with the kits or accessories when installing.

Follow all safety codes. Wear safety glasses, protective clothing, and work gloves. Use quenching cloth for brazing operations. Have a dry powder or $CO_2$ fire extinguisher available. Read these instructions thoroughly and follow all warnings or cautions included in literature and attached to the unit. Consult local building codes and current editions of the National Electrical Code (NEC) NFPA 70. In Canada, refer to current editions of the Canadian Electrical Code CSA 22.1.

Proper tools should be used that are designed for the refrigerant of the unit being installed. For A2L refrigerants, non-sparking tools are required. A refrigerant detector should be used prior to and during the installation process to check for leaks. Open flames or other ignition sources should not be present except during brazing. Brazing should only take place on refrigerant tubes open to the atmosphere or have been properly evacuated.

Recognize safety information. This is the safety-alert symbol ⚠ When you see this symbol on the unit and in instructions or manuals, be alert to the potential for personal injury.
Understand these signal words; DANGER, WARNING, and CAUTION. These words are used with the safety-alert symbol. **DANGER** identifies the most serious hazards which will result in severe personal injury or death. **WARNING** signifies hazards which could result in personal injury or death. **CAUTION** is used to identify unsafe practices which would result in minor personal injury or product and property damage. **NOTE** is used to highlight suggestions which will result in enhanced installation, reliability, or operation.

**⚠ WARNING**

**ELECTRICAL SHOCK HAZARD**

Failure to follow this warning could result in personal injury or death.

Before installing, modifying, or servicing system, main electrical disconnect switch must be in the OFF position. There may be more than 1 disconnect switch. Lock out and tag switch with a suitable warning label.

**⚠ WARNING**

**EXPLOSION HAZARD**

Failure to follow this warning could result in death, serious personal injury, death, and/or property damage.

Never use air or any gas containing oxygen for leak testing or operating refrigerant compressors. Never allow compressor suction pressure to operate in a vacuum with service valves closed. See Service Manual for pump-down instructions.

## GENERAL

The following are general installation recommendations/NOTES to be observed throughout the installation process:

1. Locate unit away from windows, patios, decks, etc. where unit operation sound may disturb customer.
2. Ensure that vapor and liquid tube diameters are appropriate for unit capacity.
3. Run refrigerant tubes as directly as possible by avoiding unnecessary turns and bends. Tube bends shall be greater than 2.5 times the external pipe diameter.
4. Leave some slack between structure and unit to absorb vibration.

5. When passing refrigerant tubes through the wall, seal opening with RTV or another pliable silicon-based caulk. (See Fig. 1.)
6. Avoid direct tubing contact with water pipes, duct work, floor joists, wall studs, floors, and walls.
7. Do not suspend refrigerant tubing from joists and studs with a rigid wire or strap which comes in direct contact with tubing.(See Fig. 1.)
8. Ensure that tubing insulation is pliable and completely surrounds vapor tube.
9. When necessary, use hanger straps which are 1 in. (25.4 mm) wide and conform to shape of tubing insulation. (See Fig. 1.)
10. Isolate hanger straps from insulation by using metal sleeves bent to conform to shape of insulation.
11. Maximum allowed elevation is 10,000 feet (3,000 meters) above sea level.
12. Roof mounted units exposed to winds may require baffles.
13. Provision shall be made for expansion and contraction of long runs of piping.
14. Piping and fittings shall be protected as far as possible against adverse environmental effects. For example, the accumulation of dirt and debris.
15. Piping should be installed in a manner which reduces the likelihood of hydraulic shock damaging the system.
16. Certified piping and components must be used to protect against corrosion.
17. Flexible pipe elements shall be protected against mechanical damage, excessive stress by torsion, or other forces and should be checked for mechanical damage annually.
18. Piping material, routing, and installation shall include protection from physical damage in operation and service, and be in compliance with national and local codes and standards of installation site.
19. When setting up refrigeration piping, precautions shall be taken to avoid excessive vibration or pulsations.
20. Take care to conduct proper installation of equipment, because improper installation could lead to gas pulsations, which cause excessive noise in the living area.

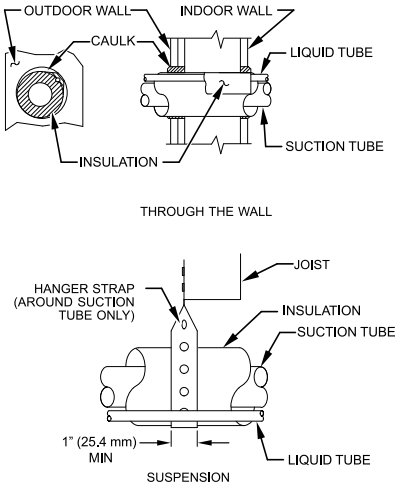


A07588

**Fig. 1 – Connecting Tubing Installation**

## Refrigerant Tubing Connection Outdoor

**IMPORTANT:** Maximum liquid-line size is 3/8-in. OD for all residential applications including long line. Refer to Residential Piping and Long Line Guideline for further information.

**IMPORTANT:** Always install the factory-supplied liquid-line filter drier. If replacing the filter drier, refer to Product Data Digest for appropriate part number. Obtain replacement filter driers from your distributor or branch.

# INSTALLATION

**IMPORTANT:** All split system and packaged air conditioners must be installed pursuant to applicable regional efficiency standards issued by the Department of Energy.

**⚠ CAUTION**

**CUT HAZARD**

Failure to follow this caution may result in personal injury.

Sheet metal parts may have sharp edges or burrs. Use care and wear appropriate protective clothing and gloves when handling parts.

## Check Equipment and Job Site

### Unpack Unit

Move to final location. Remove carton taking care not to damage unit.

### Inspect Equipment

File claim with shipping company prior to installation if shipment is damaged or incomplete. Locate unit rating plate on unit corner panel. It contains information needed to properly install unit. Check rating plate to be sure unit matches job specifications.

## Install on a Solid, Level Mounting Pad

**⚠ CAUTION**

**UNIT OPERATION HAZARD**

Failure to follow this caution may result in equipment damage or improper operation.

Locate the unit in such a way that it is stable in all circumstances including adverse weather conditions.

If conditions or local codes require the unit be attached to pad, tie down bolts should be used and fastened through knockouts provided in unit base pan. Refer to unit mounting pattern in Fig. 2 to determine base pan size and knockout hole location.

For hurricane tie downs, contact local distributor for details and PE (Professional Engineer) certification, if required by local authorities.

On rooftop applications, mount on level platform or frame. Place unit above a load-bearing wall and isolate unit and tubing set from structure. Arrange supporting members to adequately support unit and minimize transmission of vibration to building. Consult local codes governing rooftop applications.

Roof mounted units exposed to winds may require wind baffles. Consult the Application Guideline and Service Manual - Residential Split System Air Conditioners and Heat Pumps for wind baffle construction.

Unit must be level to within ±2° (±3/8 in./ft,±9.5 mm/m.) per compressor manufacturer specifications.

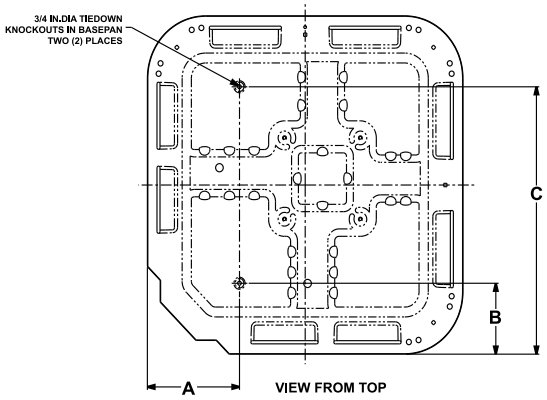


| UNIT BASE PAN Dimension in. (mm) | TIEDOWN KNOCKOUT LOCATIONS in. (mm) | | |
|---|---|---|---|
| | A | B | C |
| 31–1/2 X 31–1/2 (800 X 800) | 9–1/8 (231.8) | 6–9/16 (166.7) | 24–11/16 (627.1) |
| 35 X 35 (889 X 889) | 9–1/8 (231.8) | 6–9/16 (166.7) | 28–7/16 (722.3) |

A05177

**Fig. 2 – Tied-own Knockout Locations**

## Clearance Requirements

When installing, allow sufficient space for airflow clearance, wiring, refrigerant piping, and service. Allow 24 in. (610 mm) clearance to service end of unit and 48 in. (1219 mm) above unit. For proper airflow, a 6-in. (152 mm) clearance on 1 side of unit and 12-in. (305 mm) on all remaining sides must be maintained. Maintain a distance of 24 in. (609.6 mm) between units or 18 in. (457.2 mm) if no overhang within 12 ft. (4 m). Position so water, snow, or ice from roof or eaves cannot fall directly on unit. On rooftop applications, locate unit at least 6 in. (152 mm) above roof surface.

**NOTE:** 18" (457 mm) clearance option described above is approved for outdoor units with wire grille coil guard only. Units with louver panels require 24" (610 mm) between units.

## Operating Ambient

The minimum outdoor operating ambient in cooling mode without accessory is 55°F (13°C).

## Make Piping Connections

**⚠ WARNING**

**PERSONAL INJURY AND ENVIRONMENTAL HAZARD**

Failure to follow this warning could result in personal injury or death.

Relieve pressure and recover all refrigerant before system repair or final unit disposal. Use all service ports and open all flow-control devices, including solenoid valves.

Federal regulations require that you do not vent refrigerant to the atmosphere. Recover during system repair or final unit disposal.

**⚠ CAUTION**

**UNIT DAMAGE HAZARD**

Failure to follow this caution may result in equipment damage or improper operation.

If ANY refrigerant tubing is buried, provide a 6-in (152 mm) vertical rise at service valve. Refrigerant tubing lengths up to 36-in (914 mm) may be buried without further special consideration. Do not bury lines more than 36-in. (914 mm).

Outdoor units may be connected to indoor section using accessory tubing package or field-supplied refrigerant grade tubing of correct size and condition. Rated tubing diameters shown in Table 1 are recommended up to 80 ft. (24 m). See Product Data for acceptable alternate vapor diameters and associated capacity losses. For tubing requirements beyond 80 ft. (24 m), substantial capacity and performance losses can occur. Following the recommendations in the Residential Piping and Long Line Guideline will reduce these losses. Refer to Table 1 for field tubing diameters. Refer to Table 2 for accessory requirements.

There are no buried-line applications greater than 36-in. (914 mm) allowed.

If refrigerant tubes or indoor coil are exposed to atmosphere, they must be evacuated to 500 microns to eliminate contamination and moisture in the system.

Refrigerant pipe should be installed with the minimum length possible and practical for the application. Piping should be protected from physical damage in operation and in service and be in compliance with national and local codes such as ASHRAE 15, ASHRAE 15.2, IAPMO Uniform Mechanical Code, ICC International Mechanical Code, or CSA B52. When piping is installed through studs in a wall, steel plates should be used for protection with a minimum thickness of 16 gage.

All field joints shall be accessible for inspection prior to being covered or enclosed.

### Outdoor Unit Connected to Factory Approved R-454B Indoor Unit

When outdoor unit is connected to factory-approved R-454B indoor unit, outdoor unit contains the approximate system refrigerant charge for operation with AHRI rated indoor unit when connected by 15 ft (4.57 m) of field-supplied or factory accessory tubing and factory-supplied filter drier. For all sizes, adjust charge by adding or removing 0.6 oz/ft of 3/8 liquid line above or below 15 ft., respectively.

### Refrigerant Tubing Connection Outdoor

Connect vapor and liquid tubes to fittings on vapor and liquid service valves (see Table 1.) Use refrigerant grade tubing

**Table 1 – Refrigerant Connections and Recommended Liquid and Vapor Tube Diameters**

| UNIT SIZE (SERIES) | LIQUID | RATED VAPOR* | |
|---|---|---|---|
| | Connection & Max. Tube Diameter | Connection Diameter | Tube Diameter |
| **24** | 3/8 | 3/4 | 3/4 |
| **36** | 3/8 | 7/8 | 7/8 |
| **48** | 3/8 | 7/8 | 1-1/8 |
| **60** | 3/8 | 7/8 | 1-1/8 |

* Units are rated with 25 ft. (7.6 m) of lineset. See Product Data sheet for performance data when using different size and length linesets.

**Notes**:

1. Do not apply capillary tube or fixed orifice indoor coils to these units.
2. For Tubing Set lengths between 80 and 200 ft. (24.38 and 60.96 m) horizontal or 35 ft. (10.7 m) vertical differential 250 ft. (76.2 m) Total Equivalent Length), refer to the Residential Piping and Long Line Guideline -Air Conditioners and Heat Pumps using R-454B refrigerant.
3. For alternate liquid line options, see Product Data or Residential Piping and Long Line Application Guideline.

**Table 2 – Accessory Usage**

| Accessory | Required for Low Ambient Cooling Applications (Below 55°F / 12.8°C) | Required for Long Line Applications* | Required for Sea Coast Applications (within 2 miles/3.2 km) |
|---|---|---|---|
| Compressor Start Assist Capacitor and Relay | Yes | Yes | No |
| Crankcase Heater | Yes | Yes | No |
| Evaporator Freeze Thermostat | Yes | No | No |
| Hard Shutoff TXV | Yes | Yes | No |
| Liquid Line Solenoid Valve | No | See Residential Piping and Long Line Guideline | No |
| Low-Ambient Pressure Switch | Yes | No | No |
| Support Feet | Recommended | No | Recommended |
| Winter Start Control | Yes | No | No |

*. For tubing line sets between 80 and 200 ft. (24.38 and 60.96 m) and/or 35 ft. (10.7 m) vertical differential, refer to Residential Piping and Long Line Guideline.

## Service Valves

Service valves are closed and plugged from the factory. Outdoor units are shipped with a refrigerant charge sealed in the unit. Leave the service valves closed until all other refrigerant system work is complete or the charge will be lost. Leave the plugs in place until line set tubing is ready to be inserted.

## Brazing Connections

**⚠ WARNING**

**FIRE HAZARD**

Failure to following this warning could result in personal injury, death and/or property damage.

Refrigerant and oil mixture could ignite and burn as it escapes and contacts brazing torch. Make sure the refrigerant charge is properly removed from both the high and low sides of the system before brazing any component or lines.

**⚠ CAUTION**

**BURN HAZARD**

Failure to follow this Caution may result in personal injury.

Components will be HOT after brazing. Wear appropriate personal protective equipment and allow to cool before handling parts and equipment.

For brazing connections, use a properly sized swedge tool to create a swedge (bell) on one of the two copper tubes being connected. Alternatively, a copper coupling can be used which will require two braze joints instead of one.

Clean line set tube ends with emery cloth or steel brush. Remove any grit or debris.

Connect vapor tube to fitting on outdoor unit vapor service valves (see Table 1). Connect liquid tubing to adapter tube on liquid service valve. Use refrigerant grade tubing.

**⚠ CAUTION**

**UNIT DAMAGE HAZARD**

Failure to follow this caution may result in equipment damage or improper operation.

Service valves must be wrapped in a heat–sinking material such as a wet cloth while brazing.

Apply heat absorbing paste or heat sink product between service valve and joint. Wrap service valves with a heat sinking material such as a wet cloth.

After wrapping service valve with a wet cloth, tubing set can be brazed to service valve using either silver bearing or non–silver bearing brazing material. Do not use soft solder (materials which melt below 800°F/427°C). Braze joints using a Sil-Fos or Phos-copper alloy. Consult local code requirements.

**NOTE:** Some outdoor units contain a mechanical fitting at the liquid distributor. This connection is not field serviceable and should not be disturbed.

**NOTE:** For Liquid Service Valve - Braze lineset to adapter tube BEFORE bolting adapter to valve. This helps prevent overheating and damage to plastic washer or o-ring.

For Vapor Service Valve - remove valve core from schrader port on Service Valve BEFORE brazing. This helps prevent overheating and damage to valve seals (refer to Fig. 3). Replace valve core when brazing is completed.

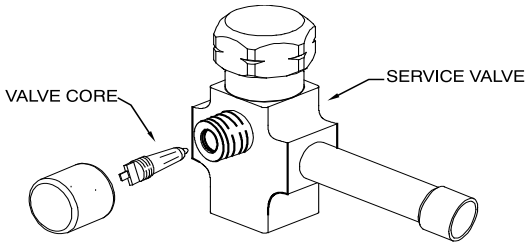


A14236

**Fig. 3 – Vapor Service Valve**

## Mechanical Line Set Connections

If using mechanical or crimp-type line set connections, follow crimp tool manufacturer's instructions.

**NOTE:** Should use of the mechanical fittings cause failure of the fittings or failure of the equipment, such would not be covered under the equipment limited warranty.

### Install Liquid-Line Filter Drier Indoor

**⚠ CAUTION**

**UNIT DAMAGE HAZARD**

Failure to follow this caution may result in equipment damage or improper operation.

1. Installation of filter drier in liquid line is required.
2. Filter drier must be wrapped in a heat-sinking material such as a wet cloth while brazing.

Refer to Fig. 4 and install filter drier as follows:

1. Braze 5-in. liquid tube to the indoor coil.
2. Wrap filter drier with damp cloth.
3. Braze filter drier to above 5-in. (127 mm) liquid tube. Flow arrow must point towards indoor coil.
4. Connect and braze liquid refrigerant tube to the filter drier.

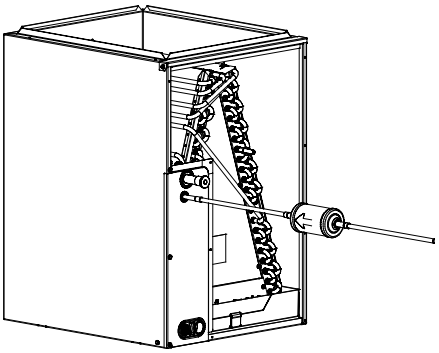

A05178

**Fig. 4 – Liquid Line Filter Drier**

## MANDATORY PIPING REQUIREMENTS

### Pressure Proof Check

Refrigerant tubes and indoor coil should be pressure tested with an inert gas such as nitrogen. Pressurize the system with the inert gas to the Low Side Test Pressure listed on the outdoor unit rating plate.

1. Perform a pressure check of the unit with a nitrogen charge of about 200 psi
2. The nitrogen holding charge must NOT decrease in pressure for 1 hour, as indicated by the test gage. The test gage resolution must not exceed 5% of the holding charge.

### Final Tubing Check

**IMPORTANT:** Check to be certain factory tubing on both indoor and outdoor unit has not shifted during shipment. Ensure tubes are not rubbing against each other or any sheet metal. Pay close attention to feeder tubes, making sure wire ties on feeder tubes are secure and tight.

### Leak Check

**⚠ WARNING**

**EXPLOSION HAZARD**

Failure to follow this warning could result in death, serious personal injury, death, and/or property damage.

Never exceed test pressures listed on the rating plate when pressure testing an outdoor unit.

**⚠ WARNING**

**FIRE HAZARD**

Failure to follow this warning could result in personal injury or death and/or property damage.

**DO NOT USE FLAMES OR IGNITION SOURCES TO LEAK CHECK.**

Vacuum unit to 500 microns. When isolating the unit from the pump, the pressure shall not rise above 1500 microns in 10 minutes.

The deep vacuum method requires a vacuum pump capable of pulling a vacuum of 500 microns and a vacuum gage capable of accurately measuring this vacuum depth. The deep vacuum method is the most positive way of assuring a system is free of air and liquid water. A tight dry system will hold a vacuum of 1000 microns after approximately 7 minutes. (See Fig. 5.)

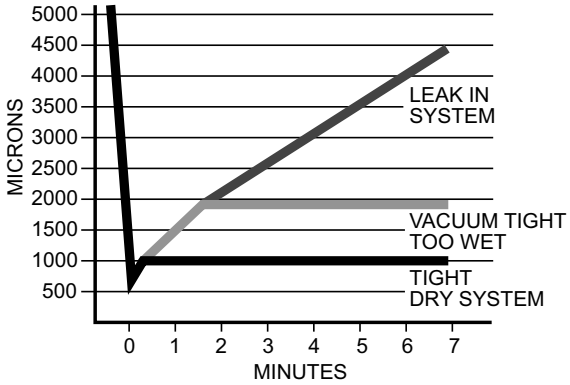


A95424

**Fig. 5 – Deep Vacuum Graph**

### Evacuate Refrigerant Tubing and Indoor Coil

**⚠ CAUTION**

**UNIT DAMAGE HAZARD**

Failure to follow this caution may result in equipment damage or improper operation.

Never use the system compressor as a vacuum pump.

Refrigerant tubes and indoor coil should be evacuated using the recommended deep vacuum method of 500 microns. The alternate triple evacuation method may be used (see triple evacuation procedure in service manual). Always break a vacuum with dry nitrogen.

### Final Tubing Check

**IMPORTANT:** Check to be certain factory tubing on both indoor and outdoor unit has not shifted during shipment. Ensure tubes are not rubbing against each other or any sheet metal or wires. Pay close attention to feeder tubes, making sure wire ties on feeder tubes are secure and tight.

## Make Electrical Connections

**⚠ WARNING**

**ELECTRICAL SHOCK HAZARD**

Failure to follow this warning could result in personal injury or death.

Do not supply power to unit with compressor terminal box cover removed.

Be sure field wiring complies with local and national fire, safety, and electrical codes, and voltage to system is within limits shown on unit rating plate. Contact local power company for correction of improper voltage. See unit rating plate for recommended circuit protection device.

**NOTE:** Operation of unit on improper line voltage constitutes abuse and could affect unit reliability. See unit rating plate. Do not install unit in system where voltage may fluctuate above or below permissible limits.

**NOTE:** Use copper wire only between disconnect switch and unit.

**NOTE:** Install branch circuit disconnect of adequate size per NEC to handle unit starting current. Locate disconnect within sight and readily accessible from unit, per Section 440-14 of NEC.

### Route Ground and Power Wires

Remove access panel to gain access to unit wiring. Extend wires from disconnect through power wiring hole provided and into unit control box.

### Connect Ground and Power Wires

**⚠ WARNING**

**ELECTRICAL SHOCK HAZARD**

Failure to follow this warning could result in personal injury or death.

The unit cabinet must have an uninterrupted or unbroken ground to minimize personal injury if an electrical fault should occur. The ground may consist of electrical wire or metal conduit when installed in accordance with existing electrical codes.

This appliance incorporates an earth connection for safety purposes only. Connect ground wire to ground connection in control box for safety. Connect power wiring to contactor as shown in Fig. 6.

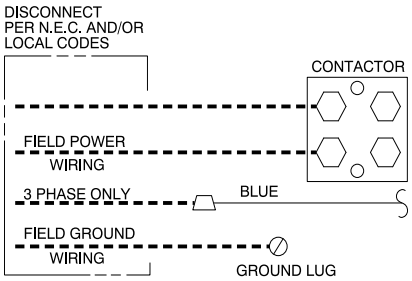


A94025

**Fig. 6 – Line Connections**

### Connect Control Wiring

**NOTE:** This unit has a transformer in the outdoor unit that powers the control board and compressor solenoid and does not require 24VAC "R" from the indoor unit. This unit can be installed in both communicating and non-communicating indoor units.

Route 24-v control wires through control wiring grommet and connect leads to control wiring (See Fig. 7 Fig. 8 and Fig. 9). Refer to Installation Instructions packaged with thermostat.

All low voltage wiring, including those from the 2-stage AC, should be connected in the low voltage side of the panel.

Use No. 18 AWG color-coded, insulated (35°C minimum) wire. If thermostat is located more than 100 ft. (30.48 m) from unit, as measured along the control voltage wires, use No. 16 AWG color-coded wire to avoid excessive voltage drop.

All wiring must be NEC Class 2 and must be separated from incoming power leads.

Use furnace transformer, fan coil transformer, or accessory transformer for control power, 24v/40va minimum.

**NOTE:** Use of available 24v accessories may exceed the minimum 40va power requirement. Determine total transformer loading and increase the transformer capacity or split the load with an accessory transformer as required.

**NOTE:** Factory Authorized Dissipation System must be installed with the indoor unit.

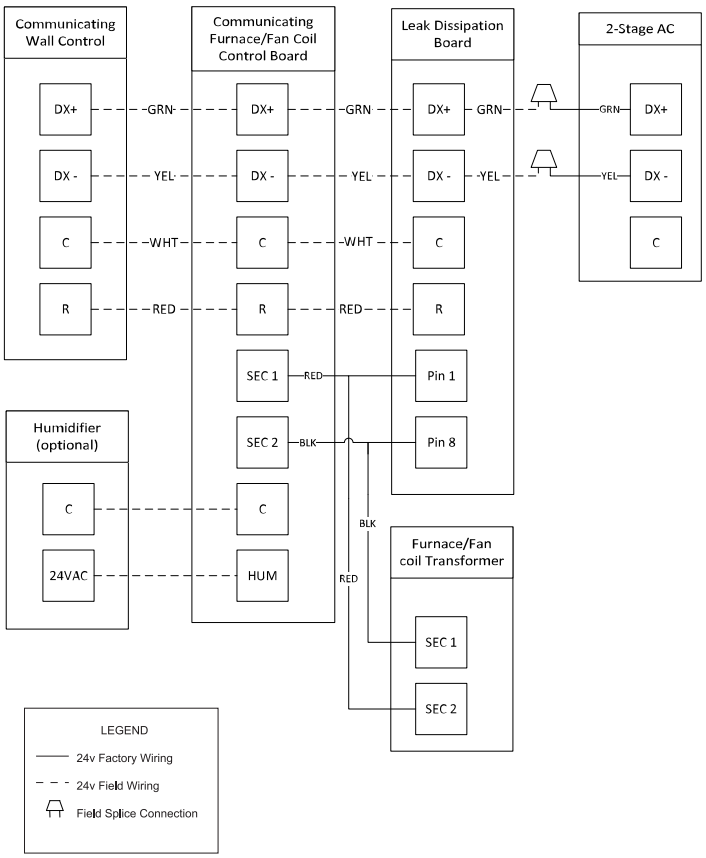


A240454

**Fig. 7 – Thermidistat Wiring with Communicating Furnace/Fan Coil Control, Leak Dissipation Board and 2-Stage AC**

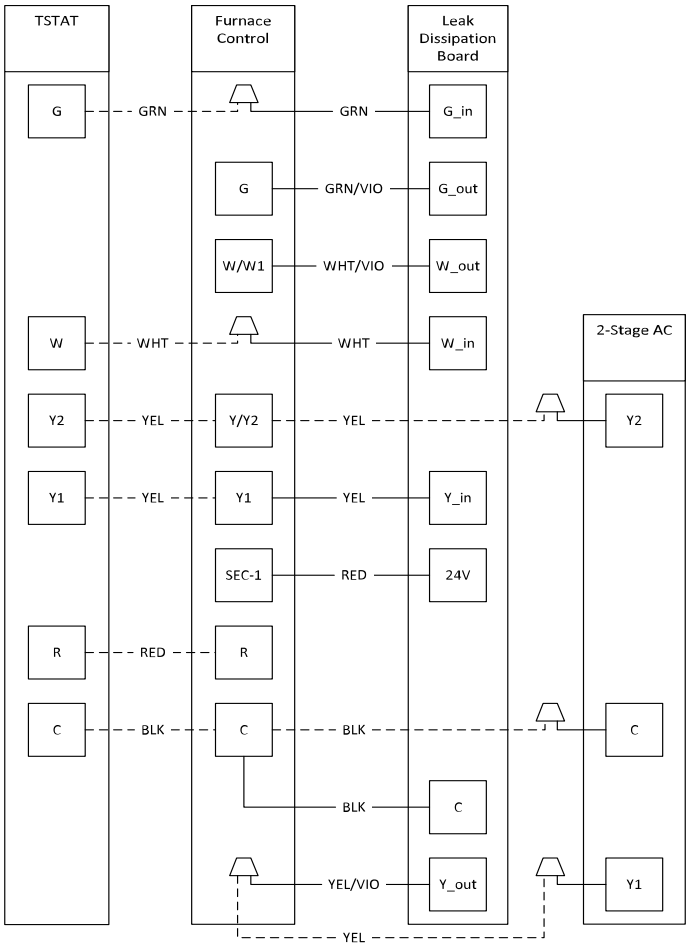


**Fig. 8 – Thermostat with Variable Speed Furnace and 2-Stage AC**

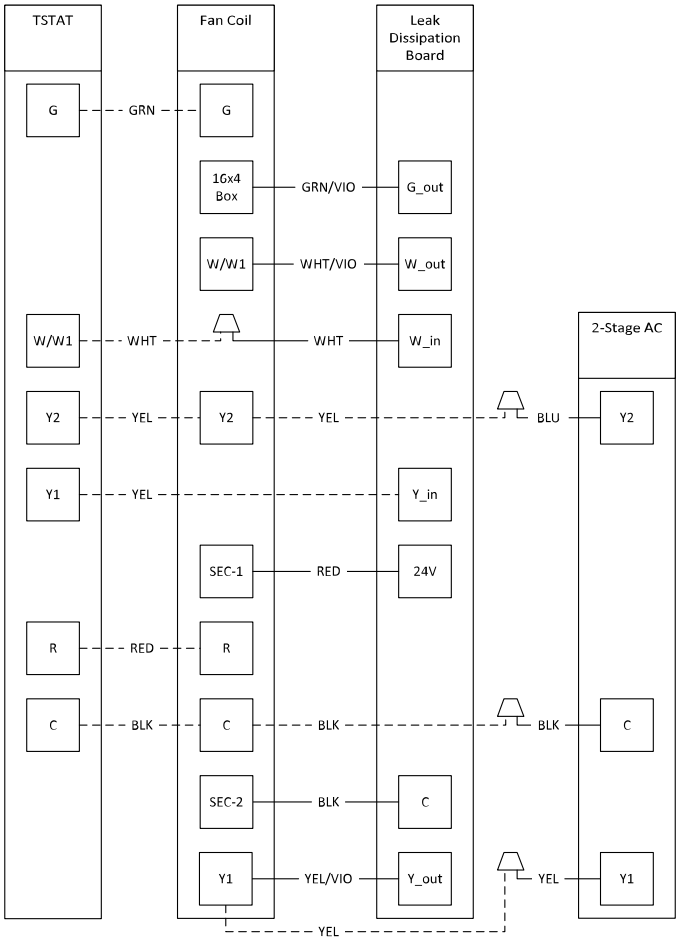


**Fig. 9 – Thermostat with Fan Coil, Leak Dissipation Board and 2-Stage AC**

## Final Wiring Check

**IMPORTANT:** Check factory wiring and field wire connections to ensure terminations are secured properly. Check wire routing to ensure wires are not in contact with tubing, sheet metal, etc.

## Compressor Crankcase Heater

When equipped with a crankcase heater, furnish power to heater a minimum of 24 hours before starting unit. To furnish power to heater only, set thermostat to OFF and close electrical disconnect to outdoor unit.

A crankcase heater is required if refrigerant tubing is longer than 80 ft. (24.4 m) or when outdoor unit is 35 ft. (11 m) below indoor unit. Refer to the Application Guideline and Service Manual Long Line Section-Residential Split-System Air Conditioners and Heat Pumps.

## Install Electrical Accessories

Refer to the individual instructions packaged with kits or accessories when installing.

## Check OAT Thermistor and OCT Thermistor Attachments

Outdoor Air Temperature (OAT) Thermistor is factory installed by inserting the nibs on either sides of the thermistor body through a keyhole in the bottom shelf of the control box and locking it in place by turning it 90 degrees, such that the spherical end of a nib faces the front of the control box.

Check to make sure the OAT is locked in place (Fig. 10).

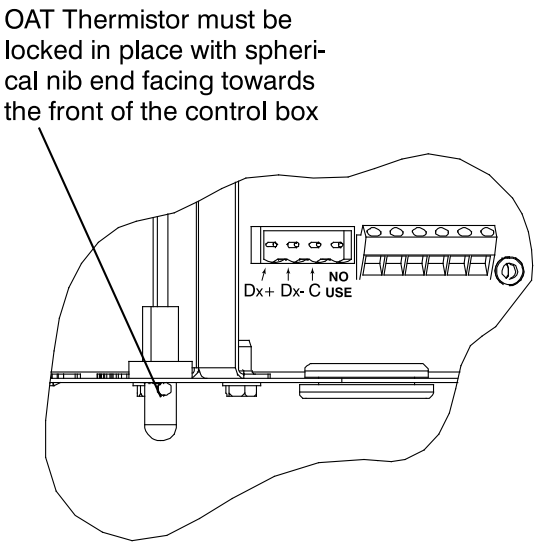


**Fig. 10 – Outdoor Air Thermistor (OAT) Attachment**

The Outdoor Coil Temperature (OCT) Thermistor is factory installed on the liquid tube between the coil assembly on the copper tube entering the liquid service valve.. See Fig. 11.

Check to make sure the thermistor is securely attached on the copper liquid tube with the clip as shown in Fig. 11.

**⚠ CAUTION**

**UNIT DAMAGE HAZARD**

Failure to follow this caution may result in unit damage.

Outdoor Coil Temperature (OCT) Thermistor must never be clipped to Aluminum portion of liquid tube. The dissimilar metals cause corrosion potential that may cause a refrigerant leak.

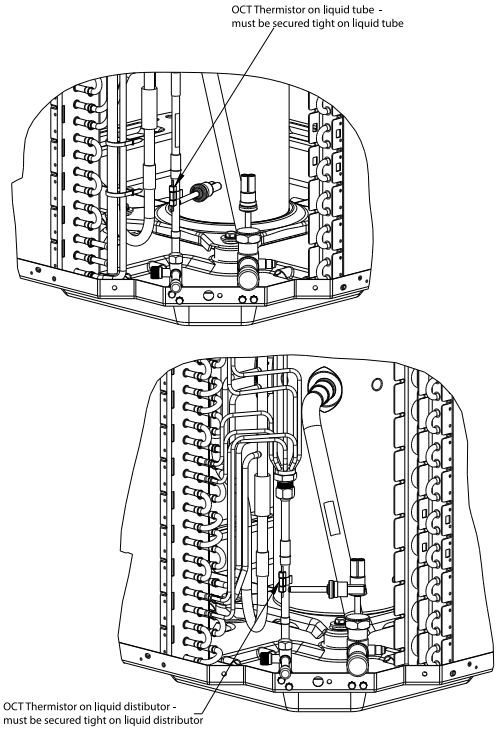


A221569

**Fig. 11 – Outdoor Coil Thermistor (OCT) Attachment**

**⚠ WARNING**

**PERSONAL INJURY AND/OR PROPERTY DAMAGEHAZARD**

Failure to follow this warning could result in personal injury and/or property damage.

For continued performance, reliability, and safety, the only approved accessories and replacement parts are those specified by the equipment manufacturer. The use of non-manufacturer approved parts and accessories could invalidate the equipment limited warranty and result in fire risk, equipment supplier.

Please review manufacturer's instructions and replacement part catalogs available from your equipment supplier.

## Airflow Setup with Communicating Furnace or Fan Coil

When using an Communicating System Control and communicating indoor equipment, airflow is automatically selected based on equipment size. See System Control Installation Instructions and indoor specification sheet for available adjustments.

The variable speed furnaces provide blower operation to match the capacities of the compressor during high and low stage cooling operation. The furnace control board allows the installing technician to select the proper airflows for each stage of cooling. Refer to the furnace literature for further details.

## Airflow Setup with Non-Communicating Furnace or Fan Coil

Two stage compressor operation requires two different indoor airflow settings for proper operation. This outdoor unit is designed for use only with an indoor blower that can be configured for separate low stage and high stage airflow (CFM) levels. Refer to Product Specifications Sheets for recommended low stage and high stage indoor airflow values.

Refer to indoor unit Installation Instructions to set the indoor blower for the proper low stage and high stage airflow values.

**NOTE**: Optimal comfort, efficiency, and reliability will only be achieved when the indoor airflow is properly set for both low stage and high stage operation.

## Start-Up

**⚠ WARNING**

**ENVIRONMENTAL HAZARD**

Failure to follow this warning could result in environmental damage.

Federal regulations require that you do not vent refrigerant to the atmosphere. Recover during system repair or final unit disposal.

**⚠ CAUTION**

**UNIT OPERATION AND SAFETY HAZARD**

Failure to follow this caution may result in personal injury, equipment damage or improper operation.?

- Do not overcharge system with refrigerant.
- Do not operate unit in a vacuum or at negative pressure.
- Compressor dome temperatures may be hot.

**⚠ CAUTION**

**PERSONAL INJURY HAZARD**

Failure to follow this caution may result in personal injury.

Wear safety glasses, protective clothing, and gloves when handling refrigerant and observe the following:

- Front seating service valves are equipped with Schrader valves.

This unit can be installed in both communicating and non-communicating indoor units. Dependent on which indoor unit this unit is being installed with, follow specified direction in this installation instructions for starting up the system.

## Communicating Start Up

Factory charge amount and desired subcooling are shown in the system control. To properly check or adjust charge, conditions must be favorable for subcooling charging in cooling mode. Favorable conditions exist when the outdoor temperature is between 65°F and 105°F and the indoor temperature is between 65°F and 80°F. If the temperatures are outside of these ranges, weigh-in charge only. If confirmation is needed, return and check subcooling when the temperatures are within the desired range.

Unit is factory charged for 15ft (4.57 m) of lineset and for smallest rated indoor coil combinations. If any refrigerant charge adjustment is required based on the indoor coil combination selected and the selected line set length, the system control will calculate and display the target subcooling and the amount of additional charge to be added. Therefore, the system control is the source of information for charging the system correctly. Refrigerant charge adjustment amount for adding or removing 0.6 oz/ft (17.74 g/m) of 3/8 liquid line above or below 15ft (4.57 m) respectively, and an additional amount of refrigerant charge adjustment (2 lbs) for a large ID coil if required, is calculated and displayed by the system control. Perform a final charge check only when in cooling and OD is between 65°F (18°C) and 105°F (40.6°C).

**NOTE:** System control indicates acceptable conditions for subcool charging mode. Do not use subcooling charge method if outside 65°F (18°C) and 105°F (40.6°C) outdoor temperature. Subcool charging mode will not be available if conditions are not acceptable.

**NOTE:** Refrigerant cylinders used for charging should be kept in an appropriate position and grounded to earth before charging. Hose length should be kept to a minimum. Care should be taken to not overcharge the system.

**NOTE:** If line length is beyond 80 ft (24.38 m) or greater than 20 ft (6.10 m) vertical separation, see Long Line Applications Guideline for special charging requirements.

### Follow these steps to properly start up system (Communicating):

**⚠ WARNING**

**PERSONAL INJURY HAZARD**

Failure to follow this warning could result in personal injury or death.

Do not use power tools to open and close service valves.

Power tools can cause valve stem to suddenly be ejected from the valve body followed by a high pressure refrigerant leak.

1. After system is evacuated, close the disconnects to energize indoor unit, outdoor unit, and System Control. Do not attempt to operate the system at this time. Mode OFF. Vapor and liquid line service valves should be fully closed.
2. If the outdoor ambient temperature is between 65°F and 105°F and the indoor temperature is between 65F and 80F then the system will be charged using the subcooling method. At this time fully open the liquid and vapor service valves if the subcooling method is to be used.
3. If the System Control is new it will proceed through a series of setup screens. Proceed through these setup screens until the equipment summary screen is reached (see Fig. 12). Fig. 12 is an example of equipment summary screen. Different information may be shown during installation of this unit. Verify that the correct equipment is shown on this screen. If the installed indoor unit is a furnace coil verify that this has been selected. The System Control will then proceed through an airflow verification test and then return to the main screen.
4. Navigate to the service area by pressing MENU from main screen (see Fig. 13). Scroll down to service icon and hold until icon turns green. Once in the "Installation and Service" menu, select "Refrigerant Charging" (see Fig. 14).

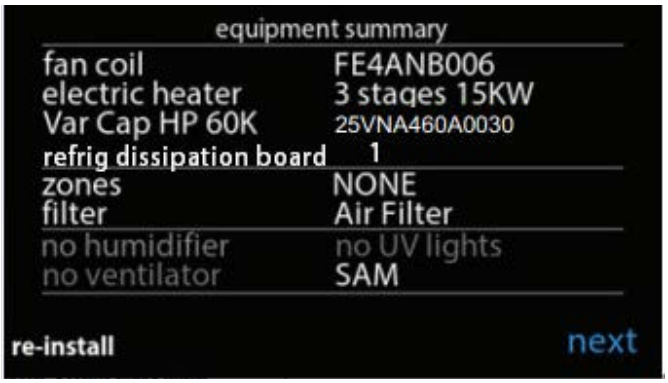


**Fig. 12 – Equipment Summary Screen**

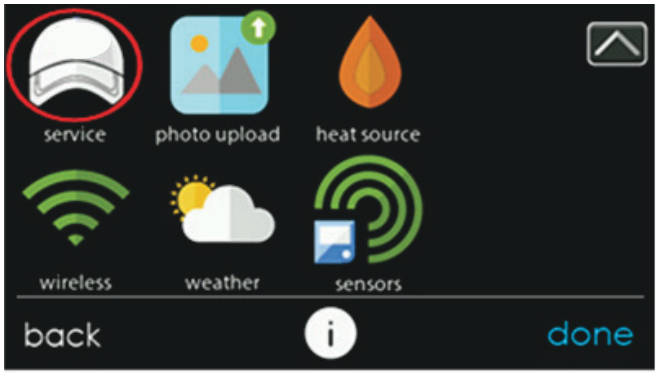


A200029

**Fig. 13 – Service Icon**

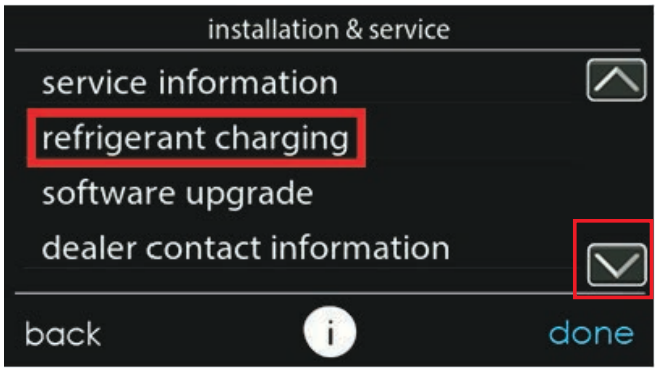


A240416

**Fig. 14 – Select Refrigerant Charging**

5. If the outdoor ambient temperature is between 65°F and 105°F and the indoor temperature is between 65°F and 80°F then select "subcool" (See Fig. 15). Steps 6 - 9 are to perform the subooling method.
6. The next screen will show the target subcooling that should be attained while charging (see Fig. 16). Before selecting "Start" verify that the service valves are open.
7. Upon selecting "Start" the system will enter into charging mode. The outdoor compressor will operate at high stage and the System Control will display a stabilization time. Once this clock reaches zero the charge can be adjusted to meet the target subcooling.
8. Compare the subcooling taken at the liquid service valve to the subcooling target listed on the charging screen. Add refrigerant if the subcooling is low and remove charge if subcooling is high. Tolerance should be +0 and -2°F.
9. If any adjustment is necessary, add or remove the charge slowly (no greater than 0.5 lb per minute) and allow system to operate for 15 minutes to stabilize before declaring a properly charged system. The use of a commercial charge metering device (restrictor) such as Imperial liquid low side charger model 535-C or Watsco ChargeFaster model CH200 is recommended when adding refrigerant to an operating system. This prevents potential damage of liquid slugging of the compressor and allows the subcooling to stabilize quicker.
10. If the outdoor ambient is below 65°F or above 105°F then the refrigerant must be weighed in. Press the "weigh-in" option in the "refrigerant charge" screen (see Fig. 17).
11. Press the text "line set" and "vapor line" to choose line set length and vapor line diameter (see Fig. 18 and Fig. 19). After complete, press "next" to advance to next screen.
12. If this is a new install, i.e. the ODU is factory charged, then select "new install" in the "charging mode selection" screen (see Fig. 20).

## ⚠ CAUTION

**UNIT OPERATION HAZARD**

Failure to follow this caution may result in improper unit operation.

For new installations only: Add additional refrigerant due to indoor coil, line set and vapor line settings. Oudoor unit is pre-charged with weight of refrigerant shown on rating plate.

13. The "new install charge weigh-in" screen will show the additional charge that needs to be added to the system to account for the ID coil and line set (see Fig. 21).
14. If this is a complete re-charge then select "complete recharge" in the "charging mode selection" screen. This screen will show the total amount of charge to add for the indoor coil, line set, and outdoor unit (see Fig. 22). The "charge breakdown" screen shows the charge required for each component of the system.
15. Add additional required charge for line set and indoor coil size then fully open liquid and vapor service valves. Charge level should then be appropriate for the system to achieve rated capacity. The charge level should be checked at another time when both the indoor and outdoor temperatures are in a more favorable range. This ensures maximum efficiency and reliability. If lineset is less than 15 feet (4.57 m) in length, charge removal may be necessary and will be shown as a negative number on System Control screen. System Control screen displays charge in lb and oz, while unit rating plate is in decimal format.

**Fig. 15 – Select Refrigerant Subcooling**

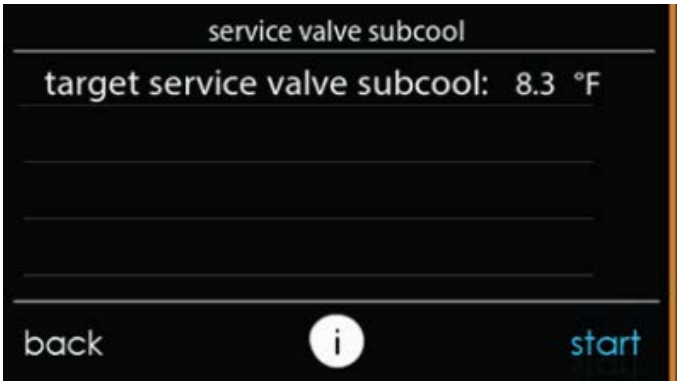


**Fig. 16 – Liquid Service Valve Subcooling Target**

**Fig. 17 – Weight-in Option for Charging between 65°F and 105°F OAT**

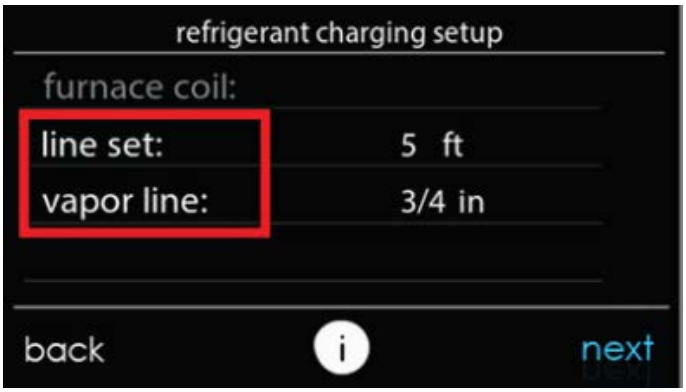


**Fig. 18 – Select Line Set Length & Vapor Line Diameter**

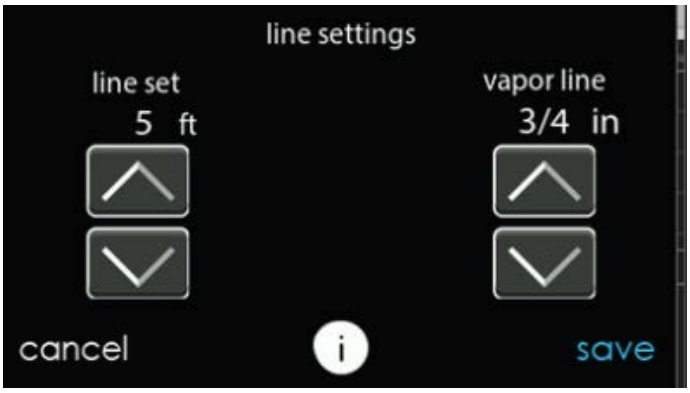


**Fig. 19 – Adjust Installed Line Set Length and Vapor Diameter**

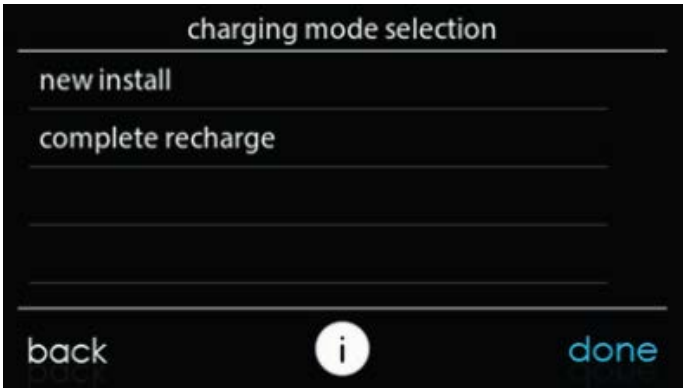


**Fig. 20 – Charging Mode Selection**

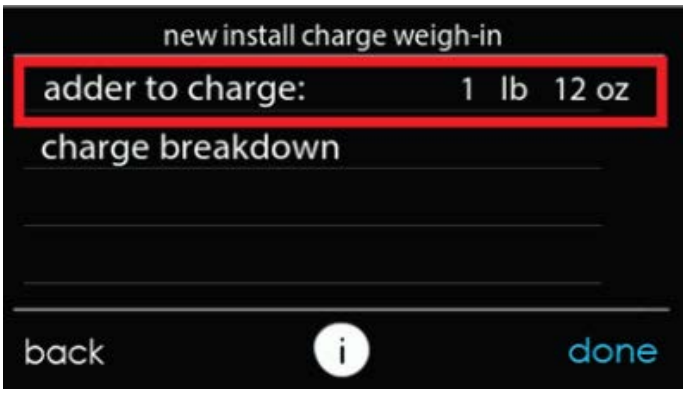


**Fig. 21 – Additional Required Charge for New Installation**

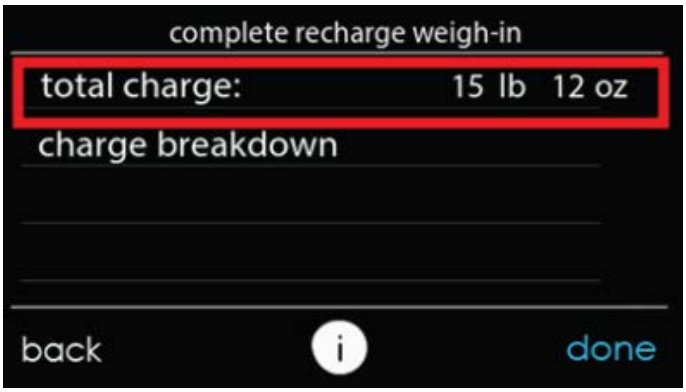


**Fig. 22 – Total Charge Required for a Complete Charge**

## Non-Communicating Start Up

**Follow these steps to properly start up system (Non-Communicating):**

**⚠ WARNING**

**PERSONAL INJURY HAZARD**

Failure to follow this warning could result in personal injury or death.

Do not use power tools to open and close service valves.

Power tools can cause valve stem to suddenly be ejected from the valve body followed by a high pressure refrigerant leak.

1. After system is evacuated, fully open liquid and vapor service valves.
2. Unit is shipped with valve stem(s) front seated (closed) and caps installed. Replace stem caps after system is opened to refrigerant flow (back seated). Replace caps finger-tight and tighten with wrench an additional 1/12 turn.
3. Close electrical disconnects to energize system.
4. Set room thermostat at desired temperature. Be sure set point is below indoor ambient temperature for cooling mode operation.
5. Set room thermostat to COOL and fan control to ON or AUTO mode, as desired.
6. Operate for unit for 15 minutes. Check system refrigerant charge.

# CHECK CHARGE (Non-Communicating)

**NOTE: CHARGE IN HIGH STAGE ONLY**

Factory charge amount and desired subcooling are shown on unit rating plate. Charging method is shown on information plate inside unit. To properly check or adjust charge, conditions must be favorable for subcooling charging. Favorable conditions exist when the outdoor temperature is between 70°F and 100°F (21°C and 38°C), and the indoor temperature is between 70°F and 80°F (21°C and 27°C). Follow the procedure below:

Unit is factory charged for 15ft (5 m) of lineset. Adjust charge by adding or removing 0.6 oz/ft of 3/8 liquid line above or below 15ft (5 m) respectively.

For standard refrigerant line lengths (80 ft/24.38 m or less), allow system to operate in high-stage cooling mode at least 15 minutes. If conditions are favorable, check system charge by subcooling method. If any adjustment is necessary, adjust charge slowly and allow system to operate for 15 minutes to stabilize before declaring a properly charged system.

If the indoor temperature is above 80°F (27°C), and the outdoor temperature is in the favorable range, adjust system charge by weight based on line length and allow the indoor temperature to drop to 80°F (27°C) before attempting to check system charge by subcooling method as described above.

If the indoor temperature is below 70°F (21°C), or the outdoor temperature is not in the favorable range, adjust charge for line set length above or below 15ft (5 m) only. Charge level should then be appropriate for the system to achieve rated capacity. The charge level could then be checked at another time when both indoor and outdoor temperatures are in a more favorable range.

**NOTE:** If line length is beyond 80 ft (24.38 m) or greater than 20 ft (6.10 m) vertical separation, See Long Line Guideline for special charging requirements.

## Final Charge Checks (Communicating and Non-Communicating)

Final charge should be recorded on the outdoor unit charging label with permanent and legible writing. Total refrigerant charge is factory charge plus any added charge. Verify that the indoor space served by the indoor unit, including spaces connected by ductwork, exceed the minimum room size as listed on the outdoor unit charging label. Refer to Table 3.

**Table 3 – Minimum Room Area Charging Table**

| Total System Charge (lbs.) | Minimum Floor Area (sq. ft.) |
|---|---|
| 4 | 61 |
| 5 | 76 |
| 6 | 91 |
| 7 | 106 |
| 8 | 122 |
| 9 | 137 |
| 10 | 152 |
| 11 | 167 |
| 12 | 182 |
| 13 | 196 |
| 14 | 213 |
| 15 | 226 |
| 16 | 243 |
| 17 | 256 |
| 18 | 274 |
| 19 | 289 |
| 20 | 304 |
| 21 | 319 |
| 22 | 335 |
| 23 | 350 |
| 24 | 365 |
| 25 | 380 |

## Units with TXV

Units installed with a TXV require charging by the subcooling method.

1. Operate unit a minimum of 15 minutes before checking charge.
2. Measure liquid service valve pressure by attaching an accurate gage to service port.
3. Measure liquid line temperature by attaching an accurate thermistor type or electronic thermometer to liquid line near outdoor coil.
4. Refer to unit rating plate for required subcooling temperature.
5. Refer to Table 4. Find the point where required subcooling temperature intersects measured liquid service valve pressure.
6. To obtain required subcooling temperature at a specific liquid line pressure, add refrigerant if liquid line temperature is higher than indicated or reclaim refrigerant if temperature is lower. Allow a tolerance of ±3°F (±1.7°C).

**Table 4 – Required Liquid Line Temperature**

| Liquid (PSIG) Pressure at Service Valve | R-454B Required Subcooling Temperature (°F) | | | | | |
|---|---|---|---|---|---|---|
| | 6 | 8 | 10 | 12 | 14 | 16 |
| 238 | 78 | 76 | 74 | 72 | 70 | 68 |
| 245 | 80 | 78 | 76 | 74 | 72 | 70 |
| 252 | 82 | 80 | 78 | 76 | 74 | 72 |
| 260 | 84 | 82 | 80 | 78 | 76 | 74 |
| 268 | 86 | 84 | 82 | 80 | 78 | 76 |
| 276 | 88 | 86 | 84 | 82 | 80 | 78 |
| 284 | 90 | 88 | 86 | 84 | 82 | 80 |
| 292 | 92 | 90 | 88 | 86 | 84 | 82 |
| 301 | 94 | 92 | 90 | 88 | 86 | 84 |
| 309 | 96 | 94 | 92 | 90 | 88 | 86 |
| 318 | 98 | 96 | 94 | 92 | 90 | 88 |
| 327 | 100 | 98 | 96 | 94 | 92 | 90 |
| 336 | 102 | 100 | 98 | 96 | 94 | 92 |
| 346 | 104 | 102 | 100 | 98 | 96 | 94 |
| 355 | 106 | 104 | 102 | 100 | 98 | 96 |
| 365 | 108 | 106 | 104 | 102 | 100 | 98 |
| 375 | 110 | 108 | 106 | 104 | 102 | 100 |
| 385 | 112 | 110 | 108 | 106 | 104 | 102 |
| 396 | 114 | 112 | 110 | 108 | 106 | 104 |
| 406 | 116 | 114 | 112 | 110 | 108 | 106 |
| 417 | 118 | 116 | 114 | 112 | 110 | 108 |
| 428 | 120 | 118 | 116 | 114 | 112 | 110 |
| 439 | 122 | 120 | 118 | 116 | 114 | 112 |
| 450 | 124 | 122 | 120 | 118 | 116 | 114 |

# GENERAL SEQUENCE OF OPERATION Standard Thermostat

**NOTE:** This unit has a transformer in the outdoor unit that powers the control board and compressor solenoid and does not require 24VAC "R" from the indoor unit.

Turn on power to indoor and outdoor units. Transformer is energized.

On a call for cooling, thermostat makes circuits Y1 and G. Circuit. If thermostat is set significantly far from set point, the Y2 energizes the compressor solenoid enabling high stage operation (typical 2 stage thermostats have a delay to enable high stage upon start up). Both Y1 and Y2 need to be energized for high stage operation. Y1 energizes contactor, starting outdoor fan motor and low-stage compressor circuit. G energizes indoor unit blower relay, starting indoor blower motor.

When thermostat is satisfied, its contacts open, de-energizing contactor and blower relay. Compressor and motors should stop.

**NOTE:** If indoor unit is equipped with a time-delay relay circuit, the indoor blower will run up to 30 or 90 seconds to increase system efficiency.

# SYSTEM FUNCTIONS AND SEQUENCE OF OPERATION

The outdoor unit control system has special functions. The following is an overview of the control functions.

**Cooling Operation**

This product utilizes either a standard 2 stage thermostat or Ion™ Black Communicating Control. With a call for cooling, the outdoor fan, and compressor are energized. When the cooling

demand is satisfied, the compressor and fan will shut off.

**NOTE:** The outdoor fan motor will continue to operate for one minute after compressor shuts off, when the outdoor ambient is greater than or equal to 100°F (37.78°C).

## Communication and Status Function Lights

Green Communications (COMM) Light (Communicating System Control only):

A green LED (COMM light) on the outdoor board indicates successful communication with the other system products. The green LED will remain OFF until communications is established. Once a valid command is received, the green LED will turn ON continuously. If no communication is received within 2 minutes, the LED will be turned OFF until the next valid communication.

## Amber Status Light

An amber colored STATUS light is used to display the operation mode and fault codes as specified in the troubleshooting section. See Table 7 for codes and definitions.

**NOTE:** Only one fault code will be displayed on the outdoor unit control board (the most recent, with the highest priority).

## Utility Interface

With Communicating System Control

The Ion™ Black Communicating Control operates without the need for the Utility Interface relay. Refer to system control instructions for proper settings and operation.

With Non-Communicating Thermostats, Utility Interface relay is required. Please see instructions for selected utility relay for proper wiring.

## Compressor Operation

The basic scroll design has been modified with the addition of an internal unloading mechanism that opens a by-pass port in the first compression pocket, effectively reducing the displacement of the scroll.

The opening and closing of the by-pass port is controlled by an internal electrically operated solenoid. The modulated scroll uses a single step of unloading to go from full capacity to approximately 67% capacity. A single speed, high efficiency motor continues to run while the scroll modulates between the two capacity steps. Modulation is achieved by venting a portion of the gas in the first suction pocket back to the low side of the compressor, thereby reducing the effective displacement of the compressor. Full capacity is achieved by blocking these vents, thus increasing the displacement to 100%.

A DC solenoid in the compressor controlled by a rectified 24 volt AC signal in the external solenoid plug moves the slider ring that covers and uncovers these vents. The vent covers are arranged in such a manner that the compressor operates at approximately 67% capacity when the solenoid is not energized and 100% capacity when the solenoid is energized. The loading and unloading of the two step scroll is done “on the fly” without shutting off the motor between steps.

**NOTE:** 67% compressor capacity translates to approximately 75% cooling capacity at the indoor coil.

## Crankcase Heater Operation

The crankcase heater is de-energized when the compressor is running. The crankcase heater is energized when the compressor is off and the ambient is less than 42°F (5.6°C). When the ambient temperature is between 65°F (18.3°C) and 42°F (5.6°C), the crankcase heater is energized 30 minutes after the compressor is turned off.

When the ambient is above 65°F (18.3°C), the crankcase heater remains de-energized after the compressor is turned off.

## Outdoor Fan motor Operation

The outdoor unit control energizes outdoor fan any time the compressor is operating. The outdoor fan remains energized for 15 minutes if a pressure switch or compressor overload should open. Outdoor fan motor will continue to operate for one minute after the compressor shuts off when the outdoor ambient is greater than or equal to 100°F (37.78°C) to allow for easier starting during next cooling cycle.

It does not change speeds between low- and high-stage operation..

## Time Delays

The unit time delays include:

- Five minute time delay to start cooling operation when there is a call from the thermostat or user interface. (To bypass this feature, hold the “Cool To” button on the Ion Black System Control for 10 seconds.
- Five minute compressor re-cycle delay on return from a brown out condition.
- Two minute time delay to return to standby operation from last valid communications (with Ion™ Black Communicating System Control only).
- One minute time delay of outdoor fan at termination of cooling mode when outdoor ambient is greater than or equal to 100°F (37.8°C).
- There is no delay between staging from low to high and from high to low capacity. The compressor will change from low to high and from high to low capacity "on the fly" to meet the demand.

## Low Ambient Cooling

When this unit is required to operate below 55°F (12.8°C) to a minimum of 0°F (-17.8°C) outdoor temperature, provisions must be made for low ambient operation.

Low ambient applications require the installation of accessory kits:

- Low Ambient Pressure Switch Kit
- Evaporator Freeze Thermostat
- Hard Start kit
- Crankcase Heater
- Winter Start Control

Support feet are recommended for low ambient cooling. See Product Specification sheet for kit part numbers on appropriate unit size and series unit.

For low ambient cooling with the Ion™ Black Communicating Control, the cooling lockout must be set to “Off” in the System Control setup.

# Control Board

The control board controls the following functions:

- Compressor contactor operation
- Outdoor fan motor operation
- Compressor external protection
- Pressure switch monitoring
- Time delays

## Field Connections

When using the Ion™ Black System Control, 2 field wires are required to be connected to the factory wires already wired to the DX+DX- terminals (Fig. 7). Unit as provided by manufacturer is set up for the Ion™ Black System Control.

When used with a standard non-communicating thermostat, 3 field wires are required to be connected to C, Y1, and Y2. Disconnect factory provided wires from DX+ and DX terminals. Using factory provided wires, connect to C, Y1, and Y2 terminals on the control board. Connect field 24V wires to factory provided wires now connected to C, Y1, and Y2.

When using Ion™ Black System Control, an output is provided on the “Y1” terminal to control a liquid line solenoid. This output will provide 24VAC whenever the compressor is running. When the unit is operated with a standard thermostat, the liquid line solenoid is connected to the “Y1” and "C" terminals along with the thermostat “Y1” wire. No output is generated by the control.

# TROUBLESHOOTING

If the compressor fails to operate with a cooling call, Table 5 can be used to verify if there is any damage to the compressor windings causing system malfunction.

**Table 5 – Winding Resistance**

| Winding | Winding resistance at 70°F +/- 20°F (21.11°C +/- 11.11°C) | | | |
|---|---|---|---|---|
| | Unit Size | | | |
| | 024 | 036 | 048 | 060 |
| Start (S-C) | 1.652 | 1.471 | 1.660 | 1.203 |
| Run (R-C) | 1.065 | 0.728 | 0.436 | 0.383 |

## Troubleshooting for Proper Switching Between Low and High Stages

Check the suction pressures at the service valves. Suction pressure should be reduced by 3-10% when switching from low to high stage.

**NOTE:** The liquid pressures are very similar between low-and high-stage operation, so liquid pressure should not be used for troubleshooting.

Compressor current should increase 20 to 45% when switching from low to high stage. The compressor solenoid when energized in high stage, should measure 24vac at the leads inside control box. When the compressor is operating in low stage, the 24v DC compressor solenoid coil is de-energized. When the compressor is operating in high stage, the 24v DC solenoid coil is energized. The solenoid plug harness that is connected to the compressor has an internal rectifier that converts the 24v AC signal to 24v DC. DO NOT INSTALL A PLUG WITHOUT AN INTERNAL RECTIFIER

## Systems Communication Failure

If communication between System Control, and condensing unit is lost, the outdoor control will flash the appropriate fault code (Table 7). Check the wiring to the System Control, indoor and outdoor units.

## Model Plug

Each control board contains a model plug. The correct model plug must be installed for or the system to operate properly (see Table 6).

**Table 6 – Model Plug**

| Model Size | Model Plug Number | Pin Resistance (KOhms) | |
|---|---|---|---|
| | | Pin 1-4 | Pin 2-3 |
| 24 | HK70EZ048 | 24 | 51 |
| 36 | HK70EZ050 | 24 | 18 |
| 48 | HK70EZ052 | 24 | 33 |
| 60 | HK70EZ054 | 24 | 51 |

The model plug is used to identify the type and size of unit to the control.

On new units, the model and serial numbers are input into the board's memory at the factory. If a model plug is lost or missing at initial installation, the unit will operate according to the information input at the factory and the appropriate error code will flash temporarily.

A FAST® Parts replacement board contains no model and serial information. If the factory control board fails, the model plug must be transferred from the original board to the replacement board for the unit to operate.

**NOTE:** The model plug takes priority over factory model information input at the factory. If the model plug is removed after initial power up, the unit will operate according to the last valid model plug installed, and flash the appropriate fault code temporarily.

## Pressure Switch Protection

The outdoor unit is equipped with high- and low-pressure switches. If the control senses the opening of a high or low-pressure switch, it will respond as follows:

1. De-energize the appropriate compressor contactor.
2. Keep the outdoor fan operating for 15 minutes.
3. Display the appropriate fault code (see Table 7).
4. After a 15 minute delay, if there is still a call for cooling and the LPS or HPS is reset, the appropriate compressor contactor is energized.
5. If LPS or HPS has not closed after a 15 minute delay, the outdoor fan is turned off. If the open switch closes anytime after the 15 minute delay, then resume operation with a call for cooling.
6. If LPS or HPS trips 3 consecutive cycles, the unit operation is locked out for 4 hours.
7. In the event of a high pressure switch trip or high pressure lockout, check the refrigerant charge outdoor fan operation and outdoor coil for airflow restrictions.
8. In the event of a low pressure switch trip or low pressure lockout, check the refrigerant charge and indoor airflow.

## Control Fault

If the outdoor unit control board has failed, the control will flash the appropriate fault code (Table 7). The control board should be replaced.

## Brown Out Protection

If the line voltage is less than 187 volts for at least 4 seconds, the compressor contactor and fan relay are de-energized. Compressor and fan operation are not allowed until the control voltage is a minimum of 190 volts. The control will flash the appropriate fault code (Table 7).

## 230V Brown Out Protection Defeated

The brownout feature can be defeated if needed for severe noisy power conditions. This defeat should always be a last resort to solving the problem. Defeat can be initiated through the forced defrost pins as follows:

The brownout toggle is accomplished by shorting the defrost pins from power up with the OAT and OCT sensor connector removed.

After 3 seconds, the status of the force defrost short and the OAT/OCT as open will be checked. If correct, then the brownout will be toggled.

- Status code 6 shows the brownout is disabled.
- Status code 5 shows the brownout is active.

After the brownout defeat is set, power down and reinstall the OAT/OCT sensor and remove the short from the forced defrost pins. As long as the short on the forced defrost remains, the OAT and OCT faults will not be cleared. The code will continue to be flashed.

The control is shipped with the brownout active. The change in status is remembered until toggled to a new status. A power down/power up sequence will not reset the status. It may be necessary to do the toggle twice to cycle to the desired state of the defeat.

## 230V Line (Power Disconnect) Detection

If there is no 230v at the compressor contactor(s) when the indoor unit is powered and cooling demand exists, the appropriate error code is displayed (see Table 7). Verify that the disconnect is closed and 230v wiring is connected to the unit.

## Compressor Voltage Sensing

The control board input terminals labeled VS and L2 (see Fig. 13) are used to detect compressor voltage status and alert the user of potential problems. The control continuously monitors the high voltage on the run capacitor of the compressor motor. Voltage should be present any time the compressor contactor is energized, and voltage should not be present when the contactor is de-energized.

## Contactor Shorted Detection

If there is compressor voltage sensed when there is no demand for compressor operation, the contactor may be stuck closed or there is a wiring error. The control will flash the appropriate fault code.

## Compressor Thermal Cutout

If the control senses the compressor voltage after start-up, and is then absent for 10 consecutive seconds while cooling demand exists, the thermal protector is open. The control de-energizes the compressor contactor for 15 minutes, but continues to operate the outdoor fan.

The control Status LED will flash the appropriate code shown in Table 7. After 15 minutes, with a call for low or high stage cooling, the compressor contactor is energized. If the thermal protector has not reset, the outdoor fan is turned off. If the call for cooling continues, the control will energize the compressor contactor every 15 minutes. If the thermal protector closes, (at the next 15 minute interval check), the unit will resume operation. If the thermal cutout trips for three consecutive cycles, then unit operation is locked out for 4 hours and the appropriate fault code is displayed.

## No 230V at Compressor

If the compressor voltage is not sensed when the compressor should be starting, the appropriate contactor may be stuck open or there is a wiring error. The control will flash the appropriate fault code. Check the contactor and control box wiring.

## Verify units for proper switching between low & high stages

Check the suction pressures at the service valves. Suction pressure should be reduced by 3-10% when switching from low to high capacity.

Compressor current should increase 20-45% when switching from low to high stage. The compressor solenoid when energized in high stage, should measure 24vac at leads inside control box.

When the compressor is operating in low stage the 24v DC compressor solenoid coil is de-energized. When the compressor is operating in high stage, the 24v DC solenoid coil is energized. The solenoid plug harness that is connected to the compressor HAS an internal rectifier that converts the 24v AC signal to 24v DC. **DO NOT INSTALL A PLUG WITHOUT AN INTERNAL RECTIFIER**.

## Unloader Test Procedure

The unloader is the compressor internal mechanism, controlled by the DC solenoid, that modulates between high and low stage. If it is suspected that the unloader is not working, the following methods may be used to verify operation.

1. Operate the system and measure compressor amperage. Cycle the unloader on and off at 30 second plus intervals at the thermostat (from low to high stage and back to low stage). Wait 5 seconds after staging to high before taking a reading. The compressor amperage should go up or down at least 20 percent.
2. If the expected result is not achieved, remove the solenoid plug from the compressor and with the unit running and the thermostat calling for high stage, test the voltage output at the plug with a DC voltmeter. The reading should be 24 volts DC.
3. If the correct DC voltage is at the control circuit molded plug, measure the compressor unloader coil resistance. The resistance should be approximately 1640 ohms. If the coil resistance is infinite or is grounded, the compressor must be replaced.

## Temperature Thermistors

Thermistors are electronic devices which sense temperature. As the temperature increases, the resistance decreases. Thermistors are used to sense outdoor ambient (OAT) and coil temperature (OCT). Refer to Fig. 23 for resistance values versus temperature.

If the outdoor air or coil thermistor should fail, the control will flash the appropriate fault code (Table 7).

**IMPORTANT:** The outdoor air thermistor and coil thermistor are factory mounted in the correct locations. Do not re-locate thermistor sensors.

## Thermistor Sensor Comparison

The control continuously monitors and compares the outdoor air temperature sensor and outdoor coil temperature sensor to ensure proper operating conditions. The comparison is:

- In cooling if the outdoor air sensor indicates ≥ 10°F/-12.22°C warmer than the coil sensor (or) the outdoor air sensor indicates ≥20°F/-6.67°C cooler than the coil sensor, the sensors are out of range.

If the sensors are out of range, the control will flash the appropriate fault code (Table 7).

The thermistor comparison is not performed during low ambient cooling or defrost operation.

## Failed Thermistor Default Operation

Factory defaults have been provided in the event of failure of outdoor air thermistor and/or coil thermistor.

If the OAT sensor should fail, low ambient cooling will not be allowed and the one-minute outdoor fan off delay will not occur.

If the OCT sensor should fail, low ambient cooling will not be allowed.

**OAT Thermistor must be locked in place with spherical nib end facing towards the front of the control box.**

Thermistor Curve: The resistance vs. temperature chart shown in Fig. 23 enables the technician to check the outdoor air and outdoor coil thermistors for proper resistance. Unplug the thermistor assembly from the circuit board and measure resistance across each thermistor. For example, if the outdoor temperature is 60°F (15.56°C), the resistance reading across the outdoor air thermistor should be around 16,000 Ohms.

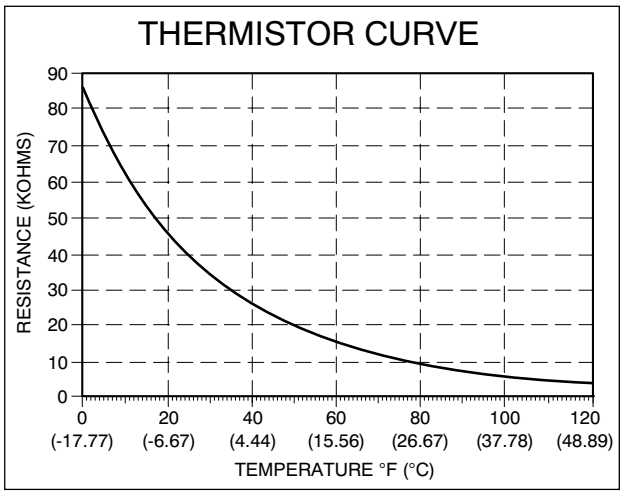


A08054

**Fig. 23 – Resistance vs Temperature Chart**

## Status Codes

Table 7 shows the status codes flashed by the amber status light. Most system problems can be diagnosed by reading the status code as flashed by the amber status light on the control board.

The codes are flashed by a series of short and long flashes of the status light. The short flashes indicate the first digit in the status code, followed by long flashes indicating the second digit of the error code. The short flash is 0.25 second ON and the long flash is 1.0 second ON. Time between flashes is 0.25 second. Time between short flash and first long flash is 1.0 second. Time between code repeating is 2.5 seconds with LED OFF.

Count the number of short and long flashes to determine the appropriate flash code. Table 7 gives possible causes and actions related to each error.

Example: Three short flashes followed by 2 long flashes indicates a 32 code. Table 7 shows this to be low pressure switch open.

**Table 7 – Status Codes**

| Operation | Fault | Amber LED Flash Code | Possible Cause and Action |
|---|---|---|---|
| Standby – no call for unit operation | None | On solid, no flash | Normal operation - with communicating Control |
| Cooling Operation | None | 1, pause | Normal operation |
| | System Communications Failure | 16 | Communication with System Control lost. Check wiring to System Control, indoor and outdoor units. |
| | High Pressure Switch Open | 31 | High pressure switch trip. Check refrigerant charge, outdoor fan operation and coils for airflow restrictions. |
| | Low Pressure Switch Open | 32 | Low pressure switch trip. Check refrigerant charge and indoor air flow. |
| | Control Fault | 45 | Outdoor unit control board has failed. Control board needs to be replaced. |
| | Brown Out (24 v) | 46 | The control voltage is less than 15.5v for at least 4 seconds. Compressor and fan operation not allowed until control voltage is a minimum of 17.5v. Verify control voltage. |
| | Outdoor Air Temp Sensor Fault | 53 | Outdoor air sensor not reading or out of range. Ohm out sensor and check wiring. |
| | Outdoor Coil Sensor Fault | 55 | Coil sensor not reading or out of range. Ohm out sensor and check wiring. |
| | Thermistors out of range | 56 | Improper relationship between coil sensor and outdoor air sensor. Ohm out sensors and check wiring. |
| | Thermal Cutout | 72 | Compressor voltage sensed after start-up, then absent for 10 consecutive seconds while cooling demand exists. Possible causes are internal compressor overload trip or loss of high voltage to compressor without loss of control voltage. The control will continue fan operation and wait 15 minutes to attempt a restart. Fault will clear when restart is successful, or low voltage power is cycled. |
| | Contactor Shorted | 73 | Compressor voltage sensed when no demand for compressor operation exists. Contactor may be stuck closed or there is a wiring error. |
| | No 230V at Compressor | 74 | Compressor voltage not sensed when compressor should be starting. Disconnect may be open or contactor may be stuck open or there is a wiring error. |
| | Thermal Lockout | 82 | Thermal cutout occurs in three consecutive cycles. Unit operation locked out for 4 hours or until 24v power recycled. |
| | Low Pressure Lockout | 83 | Low pressure switch trip has occurred during 3 consecutive cycles. Unit operation locked out for 4 hours or until 24v power recycled. |
| | High Pressure Lockout | 84 | High pressure switch trip has occurred during 3 consecutive cycles. Unit operation locked out for 4 hours or until 24v power recycled. |

**Manufacturer reserves the right to change, at any time, specifications and designs without notice and without obligations.**

# MAJOR COMPONENTS

## 2-Stage Compressor

The 2-stage compressor contains motor windings that provide 2-pole (3500 RPM) operation.

## Compressor Stage Solenoid

The solenoid to shift from low stage to high stage is controlled by Y2 input from the thermostat. Both Y1 and Y2 are required for high stage operation.

## Low Pressure Switch

Low pressure switch is provided in line with the Y1 signal to the contactor for protection.

## Compressor Internal Relief

The compressor is protected by an internal pressure relief (IPR) which relieves discharge gas into compressor shell when differential between suction and discharge pressures exceeds 550 - 625 psi. The compressor is also protected by an internal overload attached to motor windings.

## Compressor Control Contactor

The contactor has a 24 volt coil and is controlled by Y1 input from the thermostat.

# FINAL CHECKS

**IMPORTANT:** Before leaving job, be sure to do the following:

1. Ensure that all wiring is routed away from tubing and sheet metal edges to prevent rub-through or wire pinching.
2. Ensure that all wiring and tubing is secure in unit before adding panels and covers. Securely fasten all panels and covers.
3. Tighten service valve stem caps to 1/12-turn past finger tight.
4. Leave Owner's Manual with owner. Explain system operation and periodic maintenance requirements outlined in manual.
5. Fill out Dealer Installation Checklist and place in customer file.

# REPAIRING REFRIGERANT CIRCUIT

When breaking into the refrigerant circuit to make repairs, or for any other purpose, the following procedures shall be used.

1. Safely remove the refrigerant using a recovery pump certified for flammable refrigerants.
2. Purge the refrigerant circuit with nitrogen gas.
3. Evacuate the refrigerant circuit to 1500 microns.
4. Break vacuum with a nitrogen purge of the refrigerant circuit ensuring that the outlet of the vacuum pump is not near a potential ignition source.
5. Open the circuit by cutting or brazing.

# CARE AND MAINTENANCE

For continuing high performance and to minimize possible equipment failure, periodic maintenance must be performed on this equipment.

Frequency of maintenance may vary depending upon geographic areas, such as coastal applications. See Users Manual for information.

# TRAINING

My Learning Center is your central location for professional residential HVAC training resources that help strengthen careers and businesses. We believe in providing high quality learning experiences both online and in the classroom.

Access My Learning Center with your HVAC Partners credentials at www.mlctraining.com. Please contact us a mylearning@carrier.com with questions.

©2026 Carrier. All rights reserved.

Edition Date: 02/26

**Catalog No: CHT5A8T-02SI**

A Proud Member of the Carrier Family

Replaces:**CHT5A8T-01SI**

**Manufacturer reserves the right to change, at any time, specifications and designs without notice and without obligations.**