D5CMHAH
Multi-Zone Heat Pump Outdoor Unit Ductless System
Sizes 18K to 55K

SERVICE MANUAL

TABLE OF CONTENTS

PAGE

SAFETY CONSIDERATIONS 1
INTRODUCTION 2
PRECAUTIONS 3
INFORMATION SERVICING (FLAMMABLE MATERIALS) . . . 5
MODEL NUMBER NOMENCLATURE 8
WIRING 9
CONNCTION DIAGRAMS 10
WIRING DIAGRAMS 13
REFRIGERANT CYCLE DIAGRAM 21
REFRIGERANT LINES 24
PIPING REQUIREMENTS 25
SYSTEM EVACUATION AND CHARGING 26
ELECTRONIC FUNCTIONS 27
GENERAL TROUBLESHOOTING 32
ERROR CODES 34
TROUBLESHOOTING BY ERROR CODE 41
CHECK PROCEDURES 76
DISASSEMBLY INSTRUCTIONS 83
APPENDIX 100

SAFETY CONSIDERATIONS

Installing, starting up, and servicing air-conditioning equipment can be hazardous due to system pressures, electrical components, and equipment location (roofs, elevated structures, etc.). Only trained, qualified installers and service mechanics should install, start-up, and service this equipment.

Untrained personnel can perform basic maintenance functions such as coil cleaning. All other operations should be performed by trained service personnel.

When working on the equipment, observe precautions in the product literature and on tags, stickers, and labels attached to the equipment.

Follow all safety codes. Wear safety glasses and work gloves. Keep a quenching cloth and fire extinguisher nearby when brazing. Use care in handling, rigging, and setting bulky equipment.

Read this manual thoroughly and follow all warnings or cautions included in the literature and attached to the unit. Consult local building codes and National Electrical Code (NEC) for special requirements. Recognize safety information. This is the safety-alert symbol ⚠. When you see this symbol on the unit and in instructions or manuals, be alert to the potential for personal injury.

Understand these signal words: **DANGER**, **WARNING**, and **CAUTION**. These words are used with the safety-alert symbol. **DANGER** identifies the most serious hazards which **will** result in severe personal injury or death. **WARNING** signifies hazards which **could** result in personal injury or death. **CAUTION** is used to identify unsafe practices which **may** result in minor personal injury or product and property damage. **NOTE** is used to highlight suggestions which **will** result in enhanced installation, reliability, or operation.

⚠ WARNING

ELECTRICAL SHOCK HAZARD
Failure to follow this warning could result in personal injury or death.

Before installing, modifying, or servicing system, main electrical disconnect switch must be in the **OFF** position. There may be more than 1 disconnect switch. Lock out and tag switch with a suitable warning label.

⚠ WARNING

EXPLOSION HAZARD
Failure to follow this warning could result in death, serious personal injury, and/or property damage. Never use air or gases containing oxygen for leak testing or operating refrigerant compressors. Pressurized mixtures of air or gases containing oxygen can lead to an explosion.

⚠ CAUTION

EQUIPMENT DAMAGE HAZARD
Failure to follow this caution may result in equipment damage or improper operation.Do not bury more than 36 in. (914 mm) of refrigerant pipe in the ground. If any section of pipe is buried, there must be a 6 in. (152 mm) vertical rise to the valve connections on the outdoor units.

If more than the recommended length is buried, refrigerant may migrate to the cooler buried section during extended periods of system shutdown. This causes refrigerant slugging and could possibly damage the compressor at start-up.

INTRODUCTION

This service manual provides the necessary information to service, repair, and maintain the D5CMHA family of heat pumps. This manual has an “APPENDIX” on page 100 with data required to perform troubleshooting. Use the “TABLE OF CONTENTS” on page 1 to locate a desired topic.

⚠ WARNING

Only use the specified wire. If the wire is damaged, it must be replaced by the manufacturer, its service agent or similarly qualified persons in order to avoid a hazard. The product must be properly grounded at the time of installation, or electric shock may occur.

For all electrical work, follow all local and national wiring standards, regulations, and the Installation Manual. Connect the cables tightly, and clamp them securely to prevent external forces from damaging the terminal. Improper electrical connections can overheat and cause fire, and may also cause shock. All electrical connections must be made according to the Electrical Connection Diagram located on the panels of the indoor and outdoor units.

All wiring must be properly arranged to ensure that the control board cover can close properly. If the control board cover is not closed properly, it can lead to corrosion and cause the connection points on the terminal to heat up, catch fire, or cause electrical shock.

Disconnection must be incorporated in the fixed wiring in accordance with NEC, CSA, and Local Codes. Do not share the electrical outlet with other appliances. Improper or insufficient power supply can cause fire or electric shock.

If connecting power to fixed wiring, an all-pole disconnection device which has at least 3mm clearances in all poles, and have a leakage current that may exceed 10mA, the residual current device (RCD) having a rated residual operating current not exceeding 30mA, and disconnection must be incorporated in the fixed wiring in accordance with NEC, CSA, and Local Codes.

⚠ WARNING

Turn of the unit and disconnect the power before performing any installation or repairing. Failure to do so can cause electric shock.

Installation must be performed by an authorized dealer or specialist. Defective installation can cause water leakage, electrical shock, or fire. Installation must be performed according to the installation instructions.

Improper installation can cause water leakage, electrical shock, or fire. Contact an authorized service technician for repair or maintenance of this unit. This appliance shall be installed in accordance with national wiring regulations.

Only use the included accessories, parts, and specified parts for installation. Using non-standard parts can cause water leakage, electrical shock, fire, and can cause the unit to fail.

Install the unit in a firm location that can support the unit’s weight. If the chosen location cannot support the unit’s weight, or the installation is not done properly, the unit may drop and cause serious injury and damage. Install drainage piping according to the instructions in this manual. Improper drainage may cause water damage to your home and property.

For units that have an auxiliary electric heater, do not install the unit within 3 feet (1 meter) of any combustible materials.

If combustible gas accumulates around the unit, it may cause fire.

Do not turn on the power until all work has been completed.

When moving or relocating the unit, consult experienced service technicians for disconnection and re-installation of the unit.

How to install the appliance to its support, please read the information for details in "Indoor Unit Installation" and "Outdoor Unit Installation" sections.

NOTE: The air conditioner’s circuit board (PCB) is designed with a fuse to provide overcurrent protection. The specifications of the fuse are printed on the circuit board, for example: T3.15AL/250VAC, T5AL/250VAC, T3.15A/250VAC, T5A/ 250VAC, T20A/250VAC, T30A/250VAC,etc.

NOTE: Only the blast-proof ceramic fuse can be used.

⚠ WARNING

FOR FLAMMABLE REFRIGERANTS

Do not use means to accelerate the defrosting process or to clean, other than those recommended by the manufacturer.

The appliance shall be stored in a room without continuously operating ignition sources (for example: open flames, an operating gas appliance or an operating electric heater).

Do not pierce or burn. Be aware that refrigerants may not contain an odor.

⚠ WARNING

PERSONAL INJURY AND PROPERTY DAMAGE HAZARD

For continued performance, reliability, and safety, the only approved accessories and replacement parts are those specified by the equipment manufacturer. The use of non-manufacturer approved parts and accessories could invalidate the equipment limited warranty and result in fire risk, equipment malfunction, and failure. Review the manufacturer's instructions and replacement parts catalogs available from your equipment supplier.

WARNING - RISK OF FIRE DUE TO FLAMMABLE REFRIGERANT USED. FOLLOW HANDLING INSTRUCTIONS CAREFULLY IN COMPLIANCE WITH NATIONAL REGULATIONS.

R-454B

R-454B

NOTE: Risk of Fire. Flammable refrigerant used. To be repaired only by trained service personnel. Do not puncture refrigerant tubing.

PRECAUTIONS

To prevent personal injury, or property or unit damage, adhere to all precautionary measures and instructions outlined in this manual. Before servicing a unit, refer to this service manual and its relevant sections.

Failure to adhere to all precautionary measures listed in this section may result in personal injury, damage to the unit or to property, or in extreme cases, death.

IN CASE OF ACCIDENT OR EMERGENCY

⚠ WARNING

- If a gas leak is suspected, immediately turn off the gas and ventilate the area if a gas leak is suspected before turning the unit on.
- If strange sounds or smoke is detected from the unit, turn the breaker off and disconnect the power supply cable.
- If the unit comes into contact with liquid, contact an authorized service center.
- If liquid from the batteries makes contact with skin or clothing, immediately rinse or wash the area well with clean water.
- Do not insert hands or other objects into the air inlet or outlet while the unit is plugged in.
- Do not operate the unit with wet hands.

⚠ CAUTION

- Clean and ventilate the unit at regular intervals when operating it near a stove or near similar devices.
- Do not use the unit during severe weather conditions. If possible, remove the product from the window before such occurrences.

PRE-INSTALLATION AND INSTALLATION

⚠ WARNING

- Use this unit only on a dedicated circuit.
- Damage to the installation area could cause the unit to fall, potentially resulting in personal injury, property damage, or product failure.
- Only qualified personnel should disassemble, install, remove, or repair the unit.
- Only a qualified electrician should perform electrical work. For more information, contact your dealer, seller, or an authorized service center.

⚠ CAUTION

While unpacking be careful of sharp edges around the unit as well as the edges of the fins on the con-denser and evaporator.

OPERATION AND MAINTENANCE

⚠ WARNING

- Do not use defective or under-rated circuit breakers.
- Ensure the unit is properly grounded and that a dedicated circuit and breaker are installed.
- Do not modify or extend the power cable. Ensure the power cable is secure and not damaged during operation.
- Do not unplug the power supply plug during operation.
- Do not store or use flammable materials near the unit.
- Do not open the inlet grill of the unit during operation.
- Do not touch the electrostatic filter if the unit is equipped with one.
- Do not block the inlet or outlet of air flow to the unit.
- Do not use harsh detergents, solvents, or similar items to clean the unit. Use a soft cloth for cleaning.
- Do not touch the metal parts of the unit when removing the air filter as they are very sharp.
- Do not step on or place anything on the unit or outdoor units.
- Do not drink water drained from the unit
- Avoid direct skin contact with water drained from the unit.
- Use a firm stool or step ladder according to manufacturer procedures when cleaning or maintaining the unit.

⚠ CAUTION

- Do not install or operate the unit for an extended period of time in areas of high humidity or in an environment directly exposing it to sea wind or salt spray.
- Do not install the unit on a defective or damaged installation stand, or in an unsecure location.
- Ensure the unit is installed at a level position
- Do not install the unit where noise or air discharge created by the outdoor unit will negatively impact the environment or nearby residences.
- Do not expose skin directly to the air discharged by the unit for prolonged periods of time.
- Ensure the unit operates in areas water or other liquids.
- Ensure the drain hose is installed correctly to ensure proper water drainage.
- When lifting or transporting the unit, it is recommended that two or more people are used for this task.
- When the unit is not to be used for an extended time, disconnect the power supply or turn off the breaker.

WARNING FOR USING FLAMMABLE REFRIGERANT

1. Installation (Space)
   – That the installation of pipe-work shall be kept to a minimum.
   – That pipe-work shall be protected from physical damage.
   – Where refrigerant pipes shall be compliance with national gas regulations.
   – That mechanical connections shall be accessible for maintenance purposes.
   – In cases that require mechanical ventilation, ventilation openings shall be kept clear of obstruction.
   – When disposing of the product is used, be based on national regulations, properly processed.
2. Servicing

   Any person who is involved with working on or breaking into a refrigerant circuit should hold a current valid certificate from an industry-accredited assessment authority, which authorizes their competence to handle refrigerants safely in accordance with an industry recognized assessment specification.
3. Maintenance and repair requiring the assistance of other skilled personnel shall be carried out under the supervision of the person competent in the use of flammable refrigerants.
4. Do not use means to accelerate the defrosting process or to clean, other than those recommended by the manufacturer.
5. The appliance shall be stored in a room without continuously operating ignition sources (for example: open flames, an operating gas appliance or an operating electric heater).
6. Be more careful that foreign matter (oil, water, etc.) does not enter the piping. Also, when storing the piping, securely seal the opening by pinching, taping, etc.
7. Do not pierce or burn.
8. Be aware that refrigerants may not contain an odor.
9. All working procedure that affects safety means shall only be carried by competent persons.
10. Appliance shall be stored in a well -ventilated area where the room size corresponds to the room area as specific for operation.
11. The appliance shall be stored so as to prevent mechanical damage from occurring.
12. Joints shall be tested with detection equipment with a capability of 5 g/year of refrigerant or better, with the equipment in standstill and under operation or under a pressure of at least these standstill or operation conditions after installation. Detachable joints shall NOT be used in the indoor side of the unit (brazed, welded joint could be used).
13. When a FLAMMABLE REFRIGERANT is used, the requirements for installation space of appliance and /or ventilation requirements are determined according to
    – the mass charge amount (M) used in the appliance,
    – the installation location,
    – the type of ventilation of the location or of the appliance.
    – piping material, pipe routing, and installation shall include protection from physical damage in operation and service, and be in compliance with national and local codes and standards, such as ASHRAE 15, IAPMO Uniform Mechanical Code, ICC International Mechanical Code, or CSA B52. All field joints shall be accessible for inspection prior to being covered or enclosed.
    – that protection devices, piping, and fittings shall be protected as far as possible against adverse environmental effects, for ex-ample, the danger of water collecting and freezing in relief pipes or the accumulation of dirt and debris;

- that piping in refrigeration systems shall be so designed and installed to minimize the likelihood of hydraulic shock damaging the system;
- that steel pipes and components shall be protected against corrosion with a rustproof coating before applying any insulation;
- that precautions shall be taken to avoid excessive vibration or pulsation;
- the minimum floor area of the room shall be mentioned in the form of a table or a single figure without reference to a formula;
- after completion of field piping for split systems, the field pipe-work shall be pressure tested with an inert gas and then vacuum tested prior to refrigerant charging, according to the following requirements:
  - The minimum test pressure for the low side of the system shall be the low side design pressure and the minimum test pressure for the high side of the system shall be the high side design pressure, unless the high side of the system, cannot be isolated from the low side of the system in which case the entire system shall be pressure tested to the low side design pressure.
  - The test pressure after removal of pressure source shall be maintained for at least 1h with no decrease of pressure indicated by the test gauge, with test gauge resolution not exceeding 5% of the test pressure.
  - During the evacuation test, after achieving a vacuum level specified in the manual or less, the refrigeration system shall be isolated from the vacuum pump and the pressure shall not rise above 1500 microns within 10 min. The vacuum pressure level shall be specified in the manual, and shall be the lessor of 500 microns or the value required for compliance with national and local codes and standards, which may vary between residential, commercial, and industrial buildings.
- field-made refrigerant joints indoors shall be tightness tested according to the following requirements: The test method shall have a sensitivity of 5 grams per year of refrigerant or better under a pressure of at least 0,25 times the maximum allowable pressure. No leak shall be detected.
- correct the minimum room area of the space Amin by multiplying by the altitude adjustment factor (AF) factor in the below table based on for building site ground level altitude (Halt) in meters.

Table 1 — Altitude Adjustment Factor

Halt	0	200	400	600	800	1000	1200	1400	1600
AF	1.00	1.00	1.00	1.00	1.02	1.05	1.07	1.10	1.12
Halt	1800	2000	2200	2400	2600	2800	3000	3200	
AF	1.15	1.18	1.21	1.25	1.28	1.32	1.36	1.40	

- Warning: keep any required ventilation openings clear of obstruction;
- Any servicing shall be performed only as recommended by the manufacturer

14. Qualification of workers

Any maintenance, service and repair operations must be required qualification of the working personnel. Every working procedure that affects safety means shall only be carried out by competent persons that joined the training and achieved competence should be documented by a certificate. The training of these procedures is carried out by national training organizations or manufacturers that are accredited to teach the relevant national competency standards that may be set in legislation. All training shall follow the ANNEX HH requirements of UL 60335-2-40 4rd Edition.

Examples for such working procedures are:

- breaking into the refrigerating circuit
- opening of sealed components
- opening of ventilated enclosures

INFORMATION SERVICING (FLAMMABLE MATERIALS)

CHECKS TO THE AREA

Prior to beginning work on systems containing flammable refrigerants, safety checks are necessary to ensure that the risk of ignition is minimized. For repair to the refrigerating system, the following precautions shall be complied with prior to conducting work on the system.

WORK PROCEDURE

Work shall be undertaken under a controlled procedure so as to minimize the risk of a flammable gas or vapor being present while the work is being performed.

GENERAL WORK AREA

All maintenance staff and others working in the local area shall be instructed on the nature of work being carried out. Work in confined spaces shall be avoided.

CHECKING FOR PRESENCE OF REFRIGERANT

- The area shall be checked with an appropriate refrigerant detector prior to and during work, to ensure the technician is aware of potentially flammable atmospheres.
- Ensure that the leak detection equipment being used is suitable for use with flammable refrigerants, i.e. no sparking, adequately sealed or intrinsically safe.

PRESENCE OF FIRE EXTINGUISHER

If any hot work is to be conducted on the refrigeration equipment or any associated parts, appropriate fire extinguishing equipment shall be available to hand. Have a dry powder or CO2 fire extinguisher adjacent to the charging area.

NO IGNITION SOURCE

- No person carrying out work in relation to a refrigeration system which involves exposing any pipe work that contains or has contained flammable refrigerant shall use any sources of ignition in such a manner that it may lead to the risk of fire or explosion.
- All possible ignition sources, including cigarette smoking, should be kept sufficiently far away from the site of installation, repairing, removing and disposal, during which flammable refrigerant can possibly be released to the surrounding space.
- Prior to work taking place, the area around the equipment is to be surveyed to make sure that there are no flammable hazards or ignition risks.
- NO SMOKING signs shall be displayed.

VENTILATED AREA

Ensure that the area is in the open or that it is adequately ventilated before breaking into the system or conducting any hot work. A degree of ventilation shall continue during the period that the work is carried out. The ventilation should safely disperse any released refrigerant and preferably expel it externally into the atmosphere.

CHECKS TO THE REFRIGERANT EQUIPMENT

Where electrical components are being changed, they shall be fit for the purpose and to the correct specification. At all times the manufacturer's maintenance and service guidelines shall be followed. If in doubt consult the manufacturer's technical department for assistance. The following checks shall be applied to installations using FLAMMABLE REFRIGERANTS:

- the actual refrigerant charge is in accordance with the room size within which the refrigerant containing parts are installed;
- the ventilation machinery and outlets are operating adequately and are not obstructed;
- if an indirect refrigerating circuit is being used, the secondary circuits shall be checked for the presence of refrigerant;

– marking to the equipment continues to be visible and legible, marking and signs that are illegible shall be corrected;
– refrigeration pipe or components are installed in a position where they are unlikely to be exposed to any substance which may corrode refrigerant containing components, unless the components are constructed of materials which are inherently resistant to being corroded or are suitably protected against being so corroded.

CHECK TO ELECTRICAL DEVICES

Repair and maintenance to electrical components shall include initial safety checks and component inspection procedures. If a fault exists that could compromise safety, then no electrical supply shall be connected to the circuit until it is satisfactorily dealt with. If the fault cannot be corrected immediately but it is necessary to continue operation, an adequate temporary solution shall be used. This shall be reported to the owner of the equipment so all parties are advised. Initial safety checks shall include:

– that capacitors are discharged: this shall be done in a safe manner to avoid possibility of sparking;
– that there no live electrical components and wiring are exposed while charging, recovering or purging the system;
– that there is continuity of earth bonding.

SEALED ELECTRICAL COMPONENTS SHALL BE REPLACED

- During repairs to sealed components, all electrical supplies shall be disconnected from the equipment being worked upon prior to any removal of sealed covers, etc.

  If it is absolutely necessary to have an electrical supply to equipment during servicing, then a permanently operating form of leak detection shall be located at the most critical point to warn of a potentially hazardous situation.
- Particular attention shall be paid to the following to ensure that by working on electrical components, the casing is not altered in such a way that the level of protection is affected. This shall include damage to cables, excessive number of connections, terminals not made to original specification, damage to seals, incorrect fitting of glands, etc.
  – Ensure that apparatus is mounted securely.
  – Ensure that seals or sealing materials have not degraded such that they no longer serve the purpose of preventing the ingress of flammable atmospheres. Replacement parts shall be in accordance with the manufacturer's specifications.

INTRISICALLY SAFE COMPONENTS MUST BE REPLACED

Do not apply any permanent inductive or capacitance loads to the circuit without ensuring that this will not exceed the permissible voltage and current permitted for the equipment in use. Intrinsically safe components are the only types that can be worked on while live in the presence of a flammable atmosphere. The test apparatus shall be at the correct rating. Replace components only with parts specified by the manufacturer. Other parts may result in the ignition of refrigerant in the atmosphere from a leak.

NOTE: The use of silicon sealant may inhibit the effectiveness of some types of leak detection equipment. Intrinsically safe components do not have to be isolated prior to working on them.

CABLING

Check that cabling will not be subject to wear, corrosion, excessive pressure, vibration, sharp edges or any other adverse environmental effects. The check shall also take into account the effects of aging or continual vibration from sources such as compressors or fans.

DETECTION OF FLAMMABLE REFRIGERANTS

– Under no circumstances shall potential sources of ignition be used in the searching for or detection of refrigerant leaks. A halide torch (or any other detector using a naked flame) shall not be used.
– The following leak detection methods are deemed acceptable for refrigerant systems. Electronic leak detectors may be used to detect refrigerant leaks but, in the case of FLAMMABLE REFRIGERANTS, the sensitivity may not be adequate, or may need re-calibration. (Detection equipment shall be calibrated in a refrigerant-free area.) Ensure that the detector is not a potential source of ignition and is suitable for the refrigerant used. Leak detection equipment shall be set at a percentage of the LFL of the refrigerant and shall be calibrated to the refrigerant employed, and the appropriate percentage of gas (25 % maximum) is confirmed. Leak detection fluids are also suitable for use with most refrigerants but the use of detergents containing chlorine shall be avoided as the chlorine may react with the refrigerant and corrode the copper pipe-work.

NOTE Examples of leak detection fluids are:

- **bubble method,**
- **fluorescent method agents.**
  – If a leak is suspected, all naked flames shall be removed/extinguished.
  – If a leakage of refrigerant is found which requires brazing, all of the refrigerant shall be recovered from the system, or isolated (by means of shut of valves) in a part of the system remote from the leak. See the following instructions of removal of refrigerant.

REMOVAL AND EVACUATION

- When breaking into the refrigerant circuit to make repairs or for any other purpose, conventional procedures shall be used. However, it is important that best practice is followed since flammability is a consideration.
- The following procedure shall be adhered to:
  – safely remove refrigerant following local and national regulations;
  – evacuate;
  – purge the circuit with inert gas (optional for A2L);
  – evacuate (optional for A2L);
  – continuously flush or purge with inert gas when using flame to open circuit; and open the circuit;
- The refrigerant charge shall be recovered into the correct recovery cylinders if venting is not allowed by local and national codes. For appliances containing flammable refrigerants, the system shall be purged with oxygen-free nitrogen to render the appliance safe for flammable refrigerants. This process might need to be repeated several times. Compressed air or oxygen shall not be used for purging refrigerant systems.
- For appliances containing flammable refrigerants, refrigerants purging shall be achieved by breaking the vacuum in the system with oxygen-free nitrogen and continuing to fill until the working pressure is achieved, then venting to atmosphere, and finally pulling down to a vacuum (optional for A2L). This process shall be repeated until no refrigerant is within the system (optional for A2L). When the final oxygen-free nitrogen charge is used, the system shall be vented down to atmospheric pressure to enable work to take place.
- The outlet for the vacuum pump shall not be close to any potential ignition sources, and ventilation shall be available.

CHARGING PROCEDURES

In addition to conventional charging procedures, the following requirements shall be followed:

- Works shall be undertaken with appropriate tools only (In case of uncertainty, please consult the manufacturer of the tools for use with flammable refrigerants)
- Ensure that contamination of different refrigerants does not occur when using charging equipment. Hoses or lines shall be as short as possible to minimize the amount of refrigerant contained in them.
- Cylinders shall be kept upright.
- Ensure that the refrigeration system is earthed prior to charging the system with refrigerant.
- Label the system when charging is complete (if not already). Extreme care shall be taken not to overfill the refrigeration system.
- Prior to recharging the system it shall be pressure tested with OFN. The system shall be leak tested on completion of charging but prior to commissioning. A follow up leak test shall be carried out prior to leaving the site.

DECOMMISSIONING

Before carrying out this procedure, it is essential that the technician is completely familiar with the equipment and all its detail. It is recommended good practice that all refrigerants are recovered safely. Prior to the task being carried out, an oil and refrigerant sample shall be taken in case analysis is required prior to re-use of recovered refrigerant. It is essential that electrical power is available before the task is commenced.

- Become familiar with the equipment and its operation.
- Isolate system electrically.
- Before attempting the procedure ensure that:
  - mechanical handling equipment is available, if required, for handling refrigerant cylinders;
  - all personal protective equipment is available and being used correctly;
  - the recovery process is supervised at all times by a competent person;
  - recovery equipment and cylinders conform to the appropriate standards.
- Pump down refrigerant system, if possible.
- If a vacuum is not possible, make a manifold so that refrigerant can be removed from various parts of the system.
- Make sure that cylinder is situated on the scales before recovery takes place.
- Start the recovery machine and operate in accordance with manufacturer's instructions.
- Do not overfill cylinders. (No more than 80% volume liquid charge).
- Do not exceed the maximum working pressure of the cylinder, even temporarily.
- When the cylinders have been filled correctly and the process completed, make sure that the cylinders and the equipment are removed from site promptly and all isolation valves on the equipment are closed off.
- Recovered refrigerant shall not be charged into another refrigeration system unless it has been cleaned and checked.

LABELING

Equipment shall be labeled stating that it has been de-commissioned and emptied of refrigerant. The label shall be dated and signed. For appliances containing FLAMMABLE REFRIGERANTS, ensure that there are labels on the equipment stating the equipment contains FLAMMABLE REFRIGERANT.

RECOVERY

- When removing refrigerant from a system, either for servicing or decommissioning,
- it is recommended good practice that all refrigerants are removed safely.
- When transferring refrigerant into cylinders, ensure that only appropriate refrigerant recovery cylinders are employed. Ensure that the correct number of cylinders for holding the total system charge is available. All cylinders to be used are designated for the recovered refrigerant and labeled for that refrigerant (i.e. special cylinders for the recovery of refrigerant). Cylinders shall be complete with pressure-relief valve and associated shut-of valves in good working order. Empty recovery cylinders are evacuated and, if possible, cooled before recovery occurs.
- The recovery equipment shall be in good working order with a set of instructions concerning the equipment that is at hand and shall be suitable for the recovery of the flammable refrigerant. If in doubt the manufacturer should be consulted. In addition, a set of calibrated weighing scales shall be available and in good working order. Hoses shall be complete with leak-free disconnect couplings and in good condition.
- The recovered refrigerant shall be processed according to local legislation in the correct recovery cylinder, and the relevant waste transfer note arranged. Do not mix refrigerants in recovery units and especially not in cylinders.
- If compressors or compressor oils are to be removed, ensure that they have been evacuated to an acceptable level to make certain that flammable refrigerant does not remain within the lubricant. The compressor body shall not be heated by an open flame or other ignition sources to accelerate this process. When oil is drained from a system, it shall be carried out safely.

TRANSPORTATION, MARKING AND STORAGE FOR UNITS

1. Transport of equipment containing flammable refrigerants
   Compliance with the transport regulations
2. Marking of equipment using signs
   Compliance with local regulations
3. Disposal of equipment using flammable refrigerants
   Compliance with national regulations
4. Storage of equipment/appliances
   The storage of equipment should be in accordance with the manufacturer's instructions.
5. Storage of packed (unsold) equipment
   Storage package protection should be constructed such that mechanical damage to the equipment inside the package will not cause a leak of the refrigerant charge. The maximum number of pieces of equipment permitted to be stored together will be determined by local regulations.

Manufacturer reserves the right to change, at any time, specifications and designs without notice and without obligations.

MODEL NUMBER NOMENCLATURE

MODEL	VOLTAGE	OUTDOOR UNIT	RELEASABLE CHARGE (SHUTOFF VALVE)
18K	208/230-1-60	D5CMHAH18CAK	No
24K	208/230-1-60	D5CMHAH24DAK	Yes
30K	208/230-1-60	D5CMHAH30EAK	Yes
36K	208/230-1-60	D5CMHAH36EAK	Yes
48K	208/230-1-60	D5CMHAH48FAK	Yes
55K	208/230-1-60	D5CMHAH55FAK	Yes

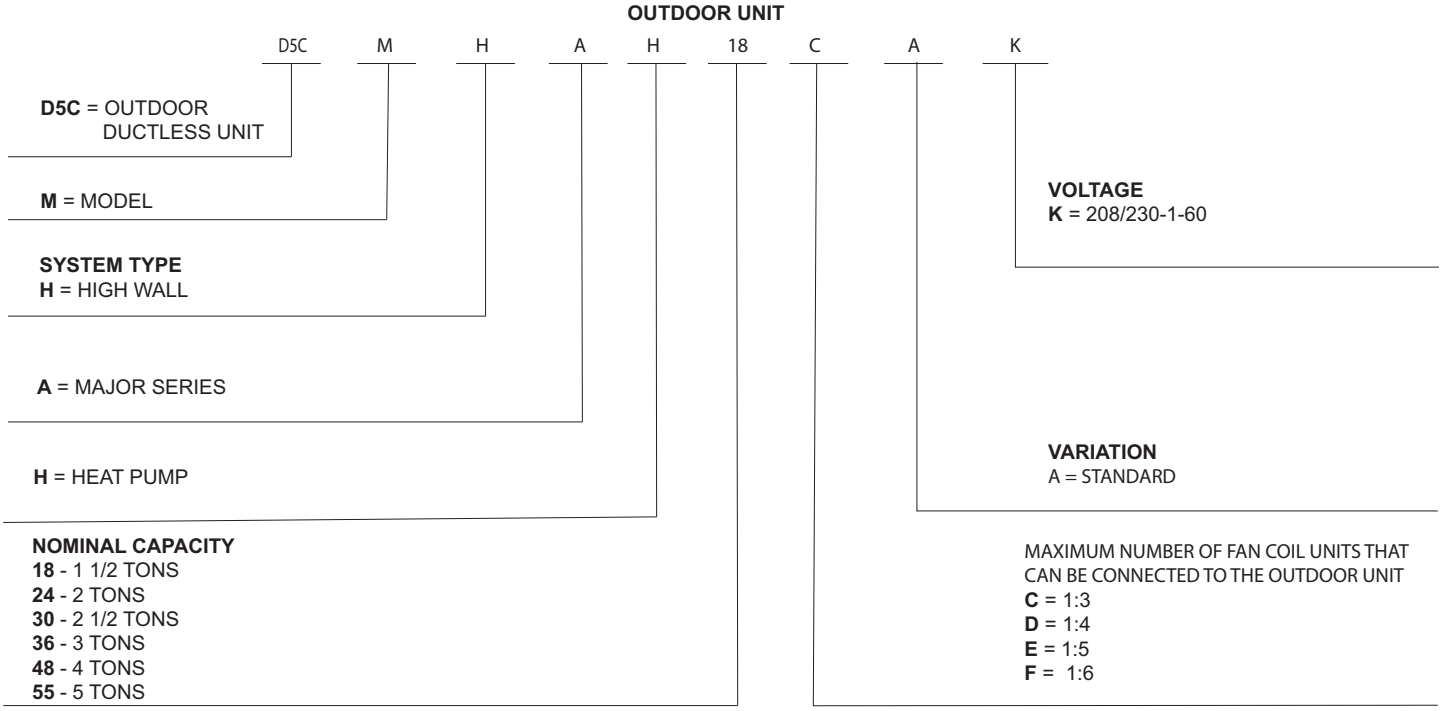

Fig. 1 —Nomenclature

For the ICP brand the SERIAL NUMBER will be date coded by a "V", year (last 2 digits of calendar year), week (2 digits, "01" thru "52") followed with a unique 5 digit sequential number that starts at "40000" and cannot exceed "49999". After reaching 49999 the numbers start over at 40000 again. The model number and serial numbers must comply with Carrier MFG-02.

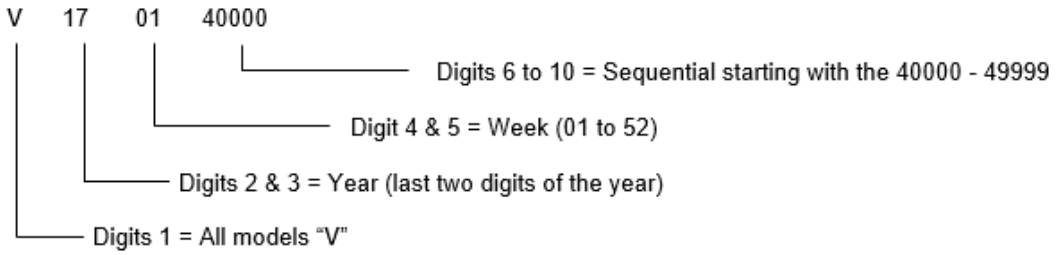

Fig. 2 —Serial Number Nomenclature

Use of the AHRI Certified TM Mark indicates a manufacturer's participation in the program For verification of certification for individual products, go to www.ahridirectory.org.

WIRING

ELECTRICAL WIRING INSTALLATION

Wiring for the outdoor unit must conform to NEC (National Electrical Code) or CEC (Canadian Electrical Code) and local codes. Use Electrical Data table MCA (minimum circuit amps) and MOCP (maximum over current protection) to correctly size the wires and the disconnect fuse or breakers respectively.

All field wiring construction should be finished by a qualified electrician.

Air conditioning equipment must be grounded according to the local electrical codes.

Provide electrical disconnect per local codes.

NOTE: DO NOT connect the power wire to the terminal of the signal wire. Connection of power to any other terminal other than L1 or L2 will cause damage to the control board.

Any control signal cable should be run separately from the power wiring.

Use of metallic conduit or shielded cable is recommended. Maintain a distance of 12 inches(300mm) from the power wiring.

NOTE: DO NOT run the power wiring and control wiring in the same conduit.

Size the wiring in accordance to the NEC / CEC. Select different colors for different wire according to relevant regulations.

Ensure that the wire color of the outdoor and the terminal number are the same as those of the indoor unit.

⚠ CAUTION

EQUIPMENT DAMAGE HAZARD

Failure to follow this caution may result in equipment damage or improper operation.

Be sure to comply with local codes while running wire from the indoor unit to the outdoor unit.

Wires should be sized based on NEC and local codes.

Every wire must be connected firmly. Loose wiring may cause the terminal to overheat or result in unit malfunction. A fire hazard may also exist. Ensure all wiring is tightly connected.

No wire should touch the refrigerant tubing, compressor or any moving parts.

Disconnecting means must be provided and shall be located within sight and readily accessible from the air conditioner.

CONNCTION DIAGRAMS

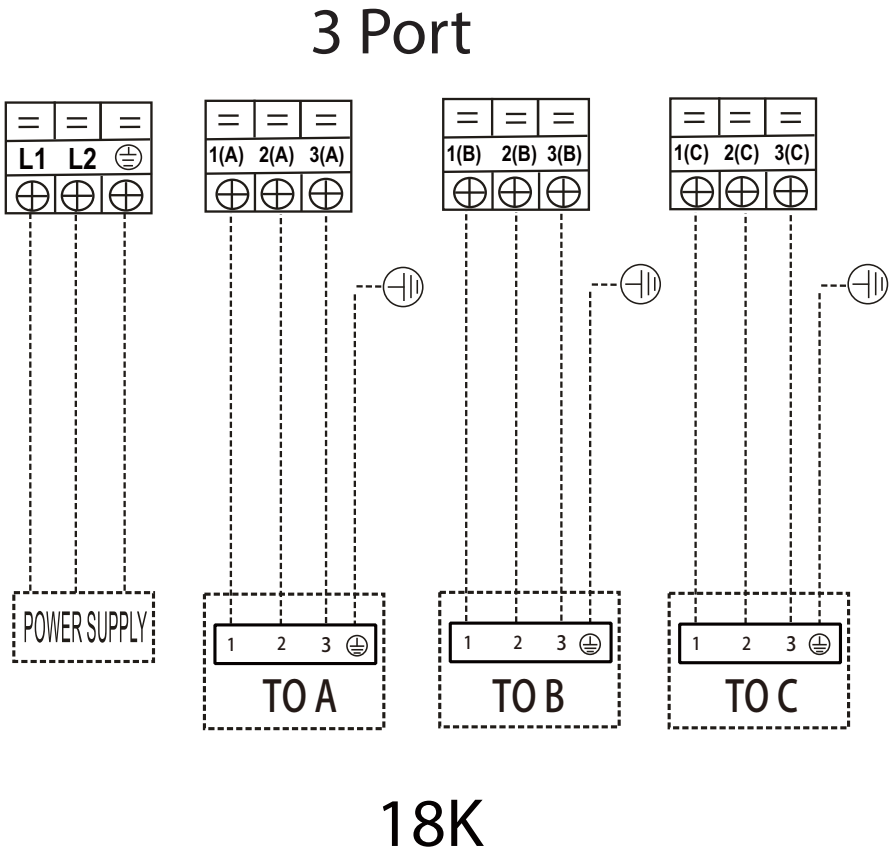

Fig. 3 —Size 18K

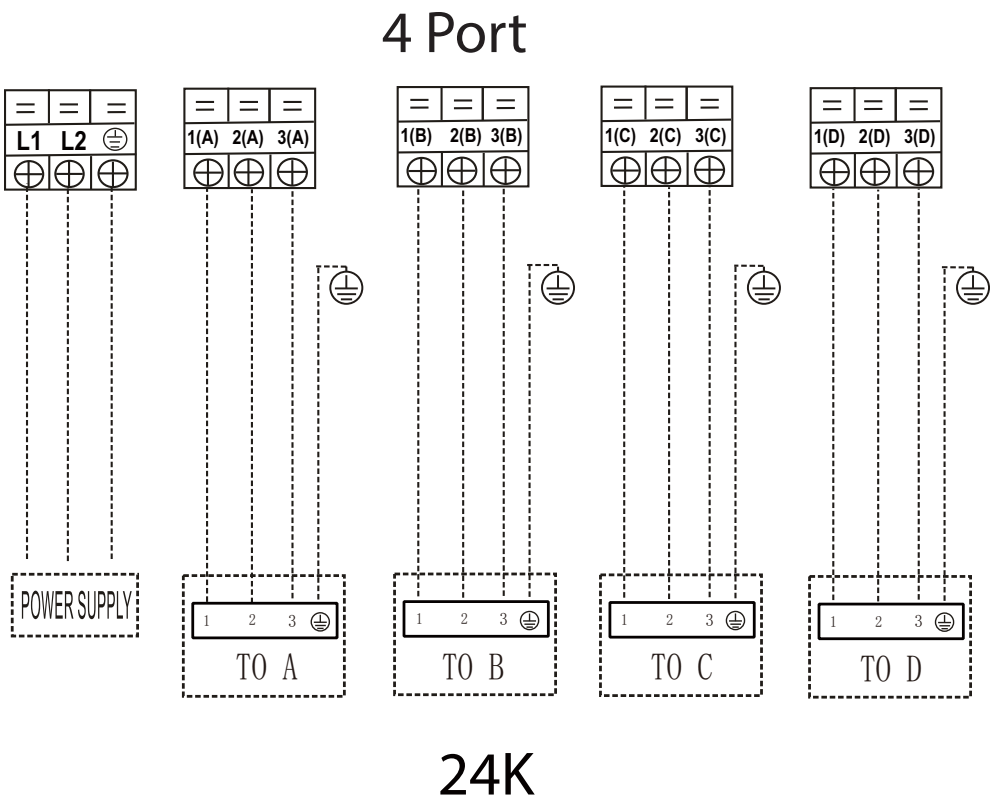

Fig. 4 —Size 24K

5 Port

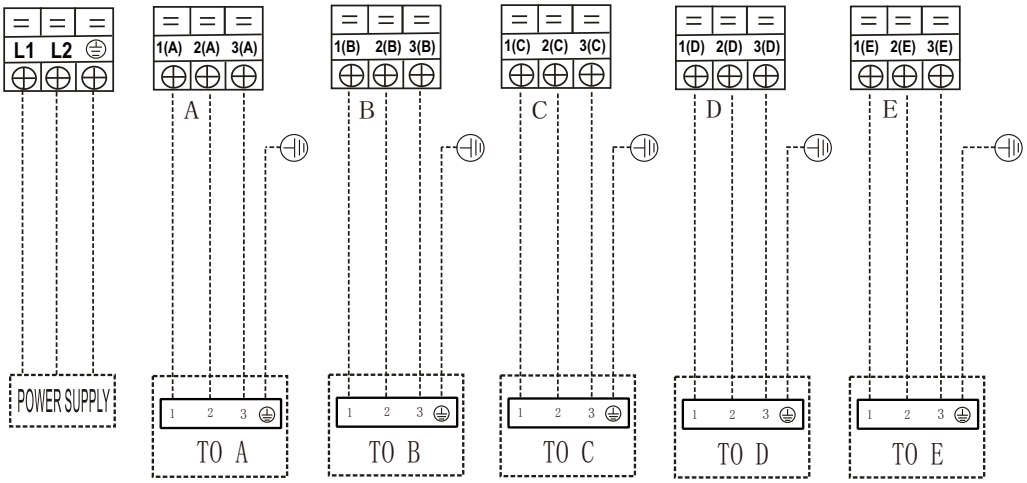

30 and 36K

Fig. 5 —Sizes 30K, 36K

6 Port

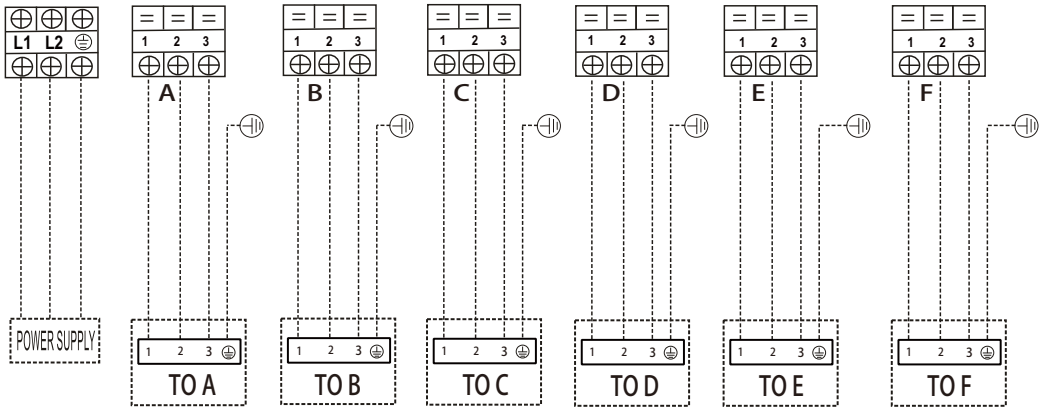

48K and 55K

Fig. 6 —Sizes 48K, 55K

AUTOMATIC WIRING/PIPING CORRECTION

Automatic Wiring/Piping Correction Function

More recent models now feature automatic correction of wiring/piping errors. Press the “check switch” on the outdoor unit PCB board for 5 seconds until the LED displays “CE”, indicate that this function is working, Approximately 5-10 minutes after the switch is pressed, the “CE” display disappears, meaning that the wiring/piping error is corrected and all wiring/piping is properly connected.

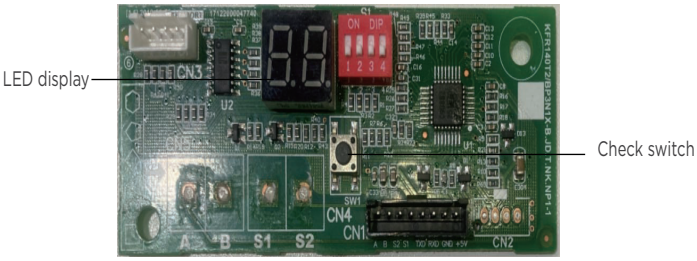

Fig. 7 — Board

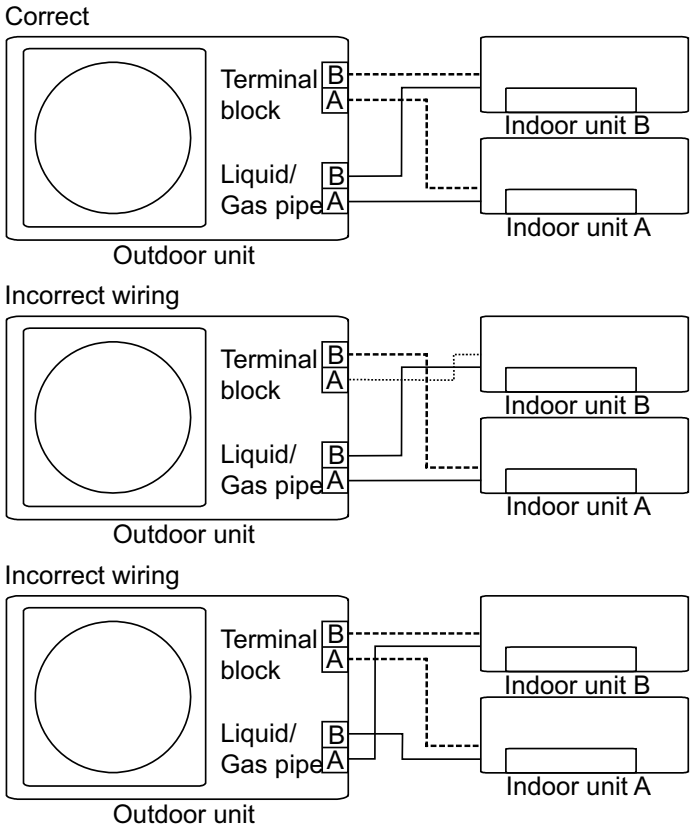

Fig. 8 — Diagram

To activate the function

1. Check that outside temperature is above 41°F(5°C). This function does not work when outside temperature is not above 41°F(5°C)
2. Ensure that the stop valves of the liquid pipe and gas pipe are open.
3. Turn on the breaker and wait at least 2 minutes.
4. Press the check switch on the outdoor PCB board unit LED display “CE”.

WIRING DIAGRAMS

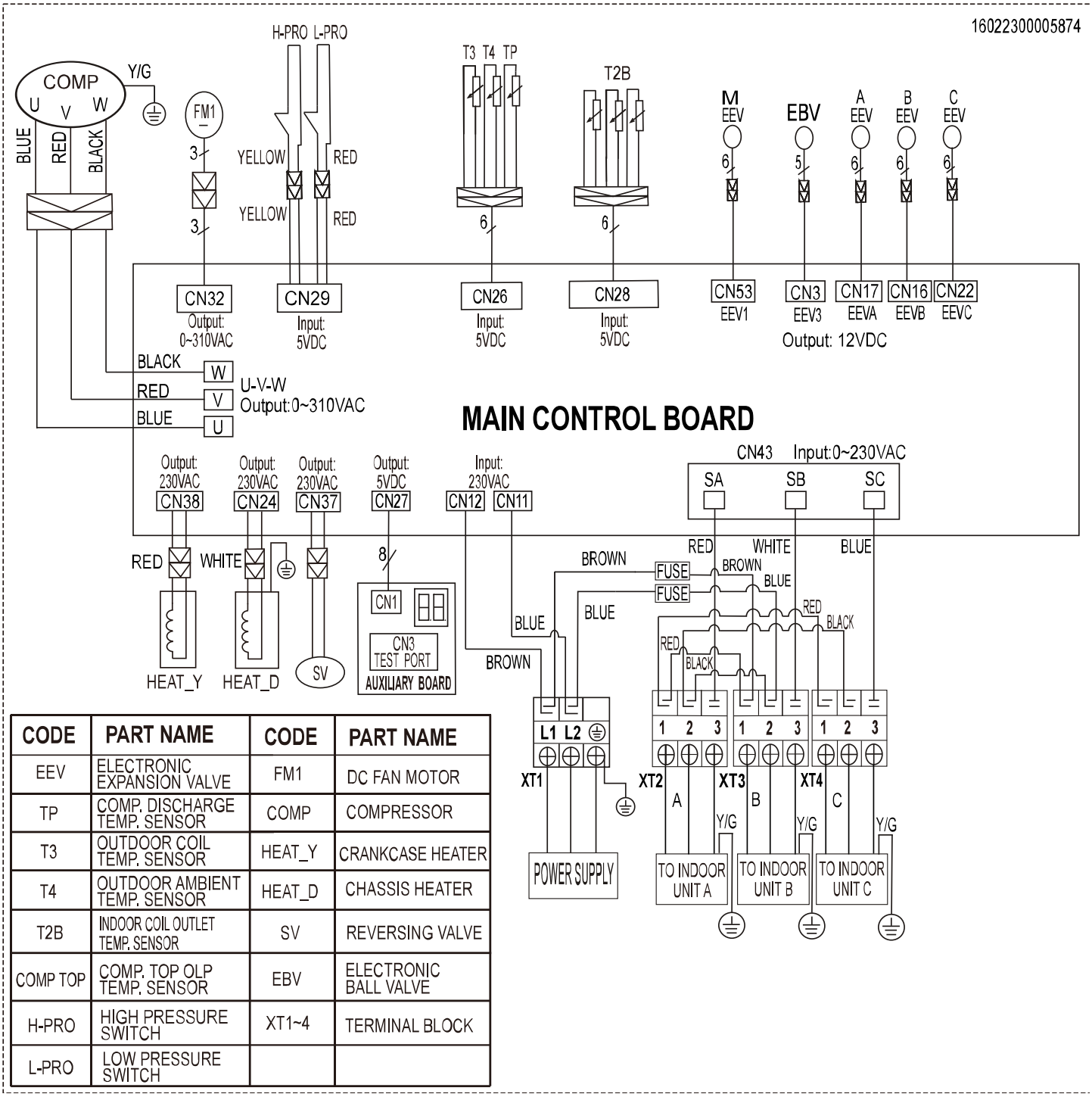

CODE	PART NAME	CODE	PART NAME
EEV	ELECTRONIC EXPANSION VALVE	FM1	DC FAN MOTOR
TP	COMP. DISCHARGE TEMP. SENSOR	COMP	COMPRESSOR
T3	OUTDOOR COIL TEMP. SENSOR	HEAT_Y	CRANKCASE HEATER
T4	OUTDOOR AMBIENT TEMP. SENSOR	HEAT_D	CHASSIS HEATER
T2B	INDOOR COIL OUTLET TEMP. SENSOR	SV	REVERSING VALVE
COMP TOP	COMP. TOP OLP TEMP. SENSOR	EBV	ELECTRONIC BALL VALVE
H-PRO	HIGH PRESSURE SWITCH	XT1~4	TERMINAL BLOCK
L-PRO	LOW PRESSURE SWITCH		

Fig. 9 —Indoor Unit Wiring Diagram (18K, 3-Zone)

Table 2 – Terminal Functions and Definitions (18K, 3-Zone)

No.	Name	CN#	Meaning
1	COMPRESSOR	W	connect to compressor; 0V AC (standby); 10-310V AC (running)
		V	
		U	
2	DC-FAN	CN32	connect to DC fan
3	TESTPORT	CN45	used for testing

Manufacturer reserves the right to change, at any time, specifications and designs without notice and without obligations.

Table 2 – Terminal Functions and Definitions (18K, 3-Zone)

No.	Name	CN#	Meaning
4	HEAT_Y	CN38	connect to compressor heater, 208-230V AC when is ON
5	4-WAY	CN37	connect to 4 way valve 1, 208-230V AC when is ON.
		CN25	connect to 4 way valve 2, 208-230V AC when is ON.
		CN42	connect to 4 way valve 3, 208-230V AC when is ON.
6	HEAT_D	CN24	connect to chassis heater, 208-230V AC when is ON
7	POWER SUPPLY	CN11	N_in: connect to N-line (208-230V AC input)
		CN12	L_in: connect to L-line (208-230V AC input)
8	S-A	CN43	S: connect to indoor unit communication(pin1-pin2: 24VDC Pulse wave; pin2-pin3: 208-230V AC input)
	S-B		
	S-C		
9	TBH-IN TBH-OUT T3B TF	CN9	connect to cold plate inlet temp. sensor TBH-IN, cold plate outlet temp. sensor TBH-OUT, condenser coil middle temp. sensor T3B, refrigerant tube inlet temp. sensor TF
10	OLP TEMP. SENSOR	CN30	connect to compressor top temp. sensor (5VDC Pulse wave)
11	T2B	CN28	connect to evaporator coil outlet temperature sensor T2B
12	AUXILIARY BOARD	CN27	connect to key board CN1
13	T3 T4 TP	CN26	connect to condenser coil temp. sensor T3, ambient temp. sensor T4, exhaust temp. sensor TP
14	H-PRO,L-RPO	CN29	connect to high and low pressure switch(pin1-pin2&pin3-pin4:5VDC pulse wave)
15	EEVA	CN17	connect to electric expansion valve
	EEVB	CN16	
	EEVC	CN22	
	EEV1	CN53	For Refrigerant Circuit Cooling- Output 12VDC
	EEV3	CN3	For Emergency Shut Off During Dissipation- Output 12 VDC
16	H_YL	CN49	connect to high pressure sensor

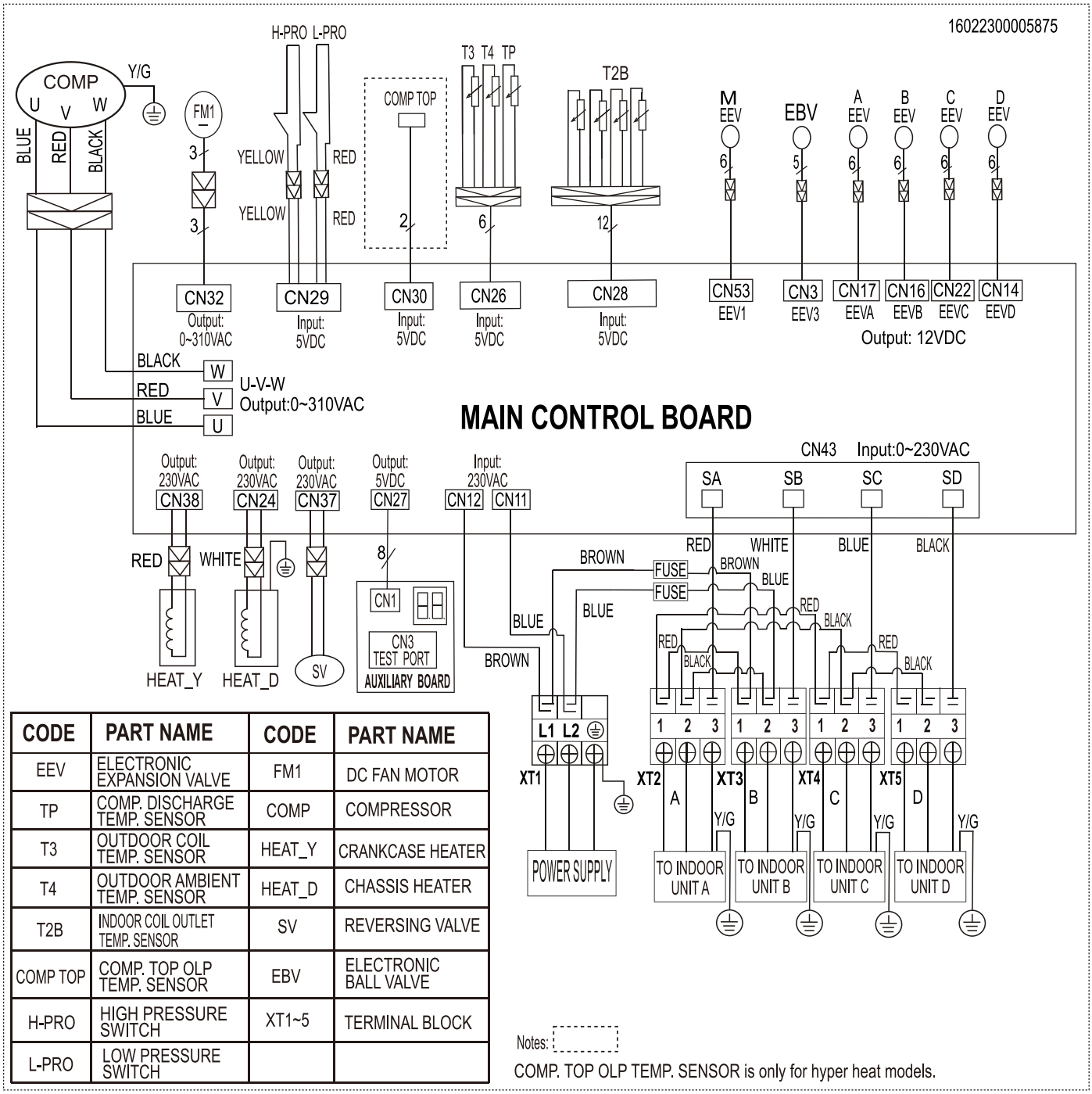

CODE	PART NAME	CODE	PART NAME
EEV	ELECTRONIC EXPANSION VALVE	FM1	DC FAN MOTOR
TP	COMP. DISCHARGE TEMP. SENSOR	COMP	COMPRESSOR
T3	OUTDOOR COIL TEMP. SENSOR	HEAT_Y	CRANKCASE HEATER
T4	OUTDOOR AMBIENT TEMP. SENSOR	HEAT_D	CHASSIS HEATER
T2B	INDOOR COIL OUTLET TEMP. SENSOR	SV	REVERSING VALVE
COMP TOP	COMP. TOP OLP TEMP. SENSOR	EBV	ELECTRONIC BALL VALVE
H-PRO	HIGH PRESSURE SWITCH	XT1~5	TERMINAL BLOCK
L-PRO	LOW PRESSURE SWITCH		

Fig. 10 —Indoor Unit Wiring Diagram (24K, 4-Zone)

Table 3 – Terminal Functions and Definitions (24K, 4-Zone)

No.	Name	CN#	Meaning
1	COMPRESSOR	W	connect to compressor; 0V AC (standby); 10-310V AC (running)
		V	
		U	
2	DC-FAN	CN32	connect to DC fan
3	TESTPORT	CN45	used for testing
4	HEAT_Y	CN38	connect to compressor heater, 208-230V AC when is ON

Table 3 – Terminal Functions and Definitions (24K, 4-Zone)

No.	Name	CN#	Meaning
5	4-WAY	CN37	connect to 4 way valve 1, 208-230V AC when is ON.
		CN25	connect to 4 way valve 2, 208-230V AC when is ON.
		CN42	connect to 4 way valve 3, 208-230V AC when is ON.
6	HEAT_D	CN24	connect to chassis heater, 208-230V AC when is ON
7	POWER SUPPLY	CN11	N_in: connect to N-line (208-230V AC input)
		CN12	L_in: connect to L-line (208-230V AC input)
8	S-A	CN43	S: connect to indoor unit communication(pin1-pin2: 24VDC Pulse wave; pin2-pin3: 208-230V AC input)
	S-B		
	S-C		
	S-D		
9	TBH-IN TBH-OUT T3B TF	CN9	connect to cold plate inlet temp. sensor TBH-IN, cold plate outlet temp. sensor TBH-OUT, condenser coil middle temp. sensor T3B, refrigerant tube inlet temp. sensor TF
10	OLP TEMP. SENSOR	CN30	connect to compressor top temp. sensor (5VDC Pulse wave)
11	T2B	CN28	connect to evaporator coil outlet temperature sensor T2B
12	AUXILIARY BOARD	CN27	connect to key board CN1
13	T3 T4 TP	CN26	connect to condenser coil temp. sensor T3, ambient temp. sensor T4, exhaust temp. sensor TP
14	H-PRO,L-RPO	CN29	connect to high and low pressure switch(pin1-pin2&pin3-pin4:5VDC pulse wave)
15	EEVA	CN17	connect to electric expansion valve
	EEVB	CN16	
	EEVC	CN22	
	EEVD	CN14	
	EEV1	CN53	For Refrigerant Circuit Cooling- Output 12VDC
	EEV3	CN3	For Emergency Shut Off During Dissipation- Output 12 VDC
16	H_YL	CN49	connect to high pressure sensor

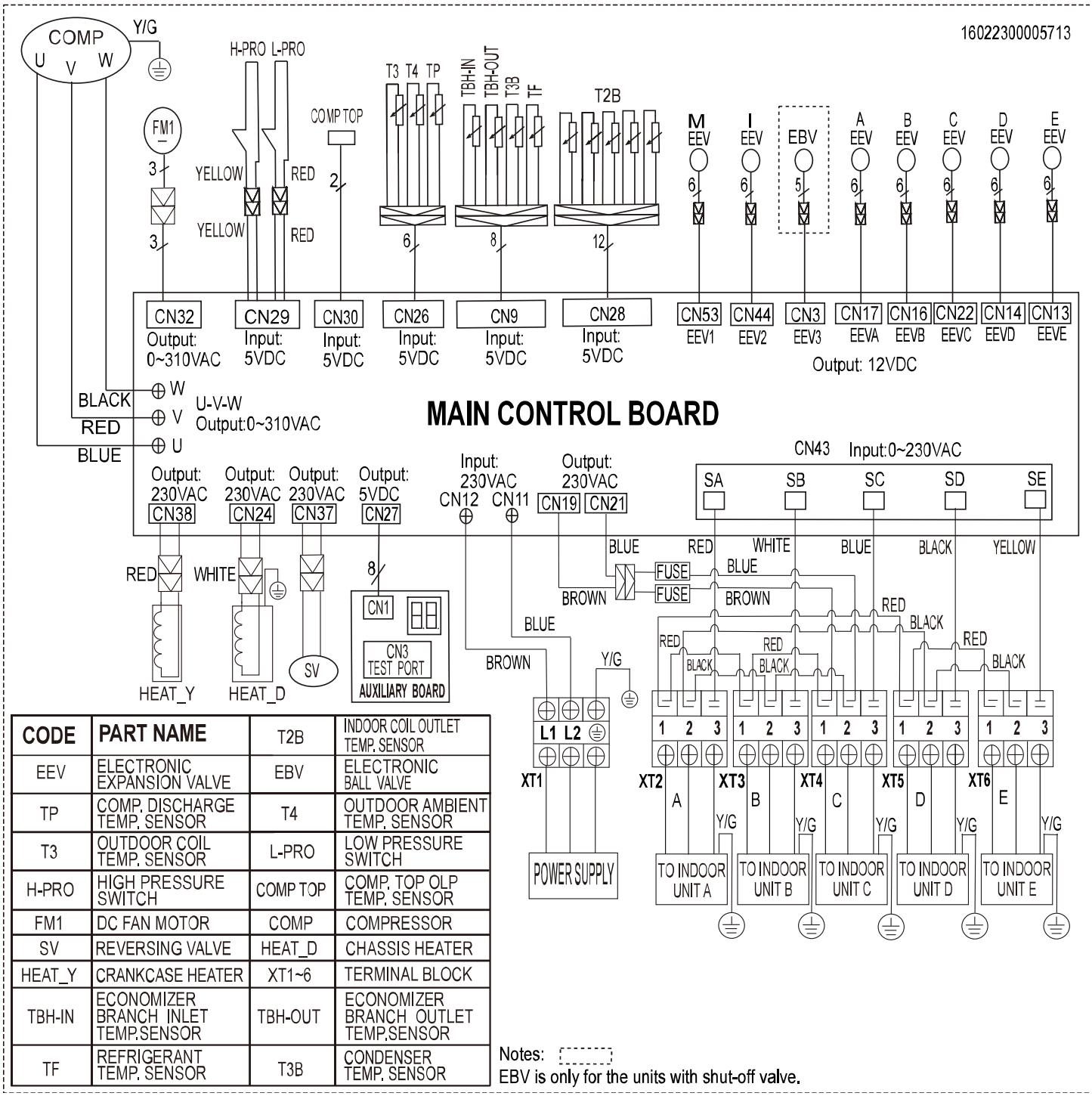

CODE	PART NAME	T2B	INDOOR COIL OUTLET TEMP. SENSOR
EEV	ELECTRONIC EXPANSION VALVE	EBV	ELECTRONIC BALL VALVE
TP	COMP. DISCHARGE TEMP. SENSOR	T4	OUTDOOR AMBIENT TEMP. SENSOR
T3	OUTDOOR COIL TEMP. SENSOR	L-PRO	LOW PRESSURE SWITCH
H-PRO	HIGH PRESSURE SWITCH	COMP TOP	COMP. TOP OLP TEMP. SENSOR
FM1	DC FAN MOTOR	COMP	COMPRESSOR
SV	REVERSING VALVE	HEAT_D	CHASSIS HEATER
HEAT_Y	CRANKCASE HEATER	XT1~6	TERMINAL BLOCK
TBH-IN	ECONOMIZER BRANCH INLET TEMP.SENSOR	TBH-OUT	ECONOMIZER BRANCH OUTLET TEMP.SENSOR
TF	REFRIGERANT TEMP. SENSOR	T3B	CONDENSER TEMP. SENSOR

Fig. 11 —Indoor Unit Wiring Diagram (30K/36K)

Table 4 – Terminal Functions and Definitions (30k / 36K)

No.	Name	CN#	Meaning
1	COMPRESSOR	W	connect to compressor; 0V AC (standby); 10-310V AC (running)
		V	
		U	
2	DC-FAN	CN32	connect to DC fan
3	TESTPORT	CN45	used for testing
4	HEAT_Y	CN38	connect to compressor heater, 208-230V AC when is ON

Table 4 – Terminal Functions and Definitions (30k / 36K)

No.	Name	CN#	Meaning
5	4-WAY	CN37	connect to 4 way valve 1, 208-230V AC when is ON.
		CN25	connect to 4 way valve 2, 208-230V AC when is ON.
		CN42	connect to 4 way valve 3, 208-230V AC when is ON.
6	HEAT_D	CN24	connect to chassis heater, 208-230V AC when is ON
7	POWER SUPPLY	CN11	N_in: connect to N-line (208-230V AC input)
		CN12	L_in: connect to L-line (208-230V AC input)
8	S-A	CN43	S: connect to indoor unit communication(pin1-pin2: 24VDC Pulse wave; pin2-pin3: 208-230V AC input)
	S-B		
	S-C		
	S-D		
	S-E		
9	TBH-IN TBH-OUT T3B TF	CN9	connect to cold plate inlet temp. sensor TBH-IN, cold plate outlet temp. sensor TBH-OUT, condenser coil middle temp. sensor T3B, refrigerant tube inlet temp. sensor TF
10	OLP TEMP. SENSOR	CN30	connect to compressor top temp. sensor (5VDC Pulse wave)
11	T2B	CN28	connect to evaporator coil outlet temperature sensor T2B
12	AUXILIARY BOARD	CN27	connect to key board CN1
13	T3 T4 TP	CN26	connect to condenser coil temp. sensor T3, ambient temp. sensor T4, exhaust temp. sensor TP
14	H-PRO,L-RPO	CN29	connect to high and low pressure switch(pin1-pin2&pin3-pin4:5VDC pulse wave)
15	EEVA	CN17	connect to electric expansion valve
	EEVB	CN16	
	EEVC	CN22	
	EEVD	CN14	
	EEVE	CN13	
	EEV1	CN53	For Refrigerant Circuit Cooling- Output 12VDC
	EEV2	CN44	For EVI circuit-output 12VDC
	EEV3	CN3	For Emergency Shut Off During Dissipation- Output 12 VDC
16	H_YL	CN49	connect to high pressure sensor

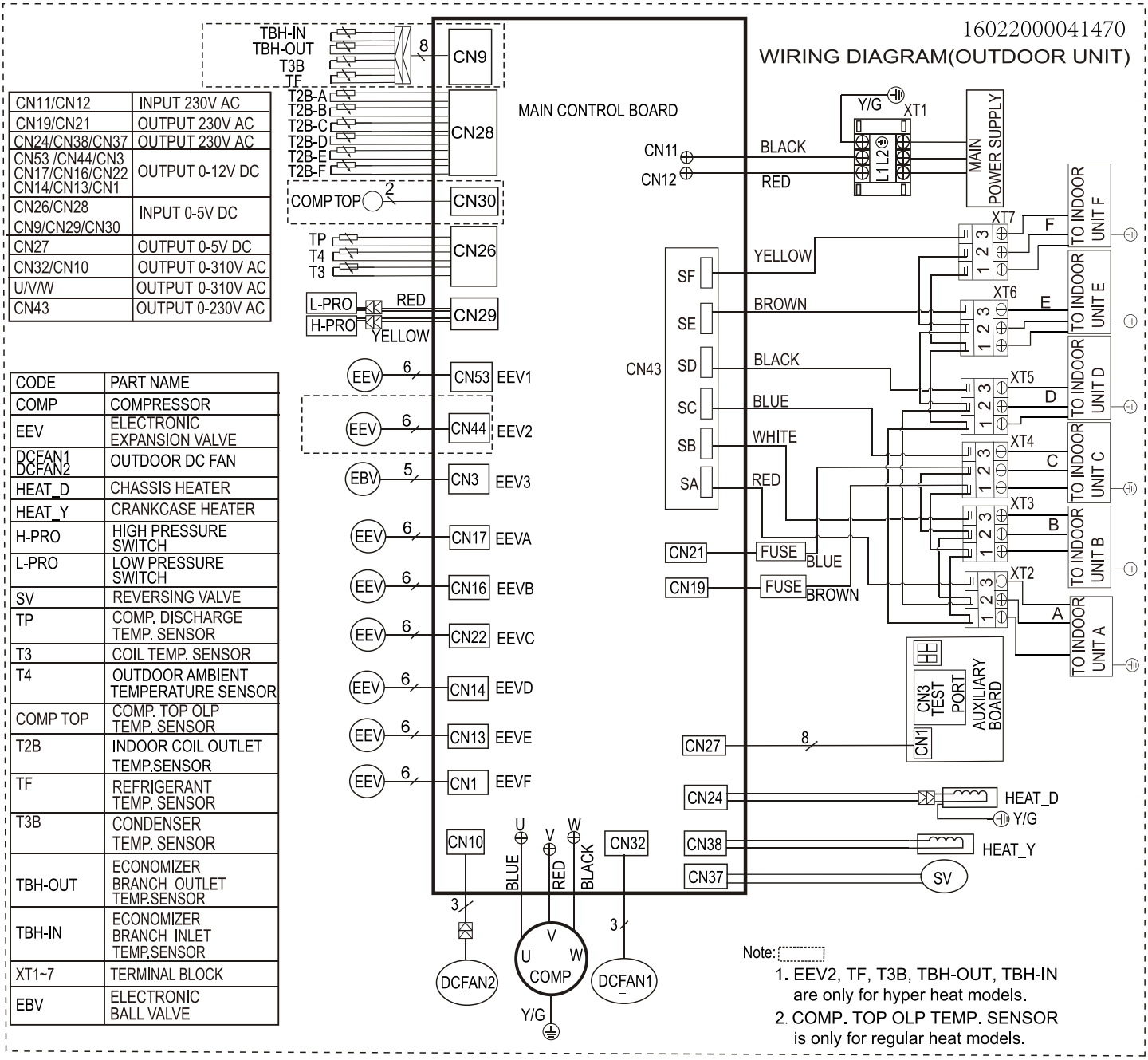

CN11/CN12	INPUT 230V AC
CN19/CN21	OUTPUT 230V AC
CN24/CN38/CN37	OUTPUT 230V AC
CN53 /CN44/CN3 CN17/CN16/CN22 CN14/CN13/CN1	OUTPUT 0-12V DC
CN26/CN28 CN9/CN29/CN30	INPUT 0-5V DC
CN27	OUTPUT 0-5V DC
CN32/CN10	OUTPUT 0-310V AC
U/V/W	OUTPUT 0-310V AC
CN43	OUTPUT 0-230V AC

CODE	PART NAME
COMP	COMPRESSOR
EEV	ELECTRONIC EXPANSION VALVE
DCFAN1 DCFAN2	OUTDOOR DC FAN
HEAT_D	CHASSIS HEATER
HEAT_Y	CRANKCASE HEATER
H-PRO	HIGH PRESSURE SWITCH
L-PRO	LOW PRESSURE SWITCH
SV	REVERSING VALVE
TP	COMP. DISCHARGE TEMP. SENSOR
T3	COIL TEMP. SENSOR
T4	OUTDOOR AMBIENT TEMPERATURE SENSOR
COMP TOP	COMP. TOP OLP TEMP. SENSOR
T2B	INDOOR COIL OUTLET TEMP.SENSOR
TF	REFRIGERANT TEMP. SENSOR
T3B	CONDENSER TEMP. SENSOR
TBH-OUT	ECONOMIZER BRANCH OUTLET TEMP.SENSOR
TBH-IN	ECONOMIZER BRANCH INLET TEMP.SENSOR
XT1~7	TERMINAL BLOCK
EBV	ELECTRONIC BALL VALVE

Fig. 12 —Indoor Unit Wiring Diagram (48K/55K)

Table 5 – Terminal Functions and Definitions (48k / 55K)

No.	Name	CN#	Meaning
1	COMPRESSOR	W	connect to compressor; 0V AC (standby); 10-310V AC (running)
		V	
		U	
2	DC-FAN	CN32	connect to DC fan
3	TESTPORT	CN45	used for testing
4	HEAT_Y	CN38	connect to compressor heater, 208-230V AC when is ON
5	4-WAY	CN37	connect to 4 way valve 1, 208-230V AC when is ON.
		CN25	connect to 4 way valve 2, 208-230V AC when is ON.
		CN42	connect to 4 way valve 3, 208-230V AC when is ON.

Manufacturer reserves the right to change, at any time, specifications and designs without notice and without obligations.

Table 5 – Terminal Functions and Definitions (48k / 55K)

No.	Name	CN#	Meaning
6	HEAT_D	CN24	connect to chassis heater, 208-230V AC when is ON
7	POWER SUPPLY	CN11	N_in: connect to N-line (208-230V AC input)
		CN12	L_in: connect to L-line (208-230V AC input)
8	S-A	CN43	S: connect to indoor unit communication(pin1-pin2: 24VDC Pulse wave; pin2-pin3: 208-230V AC input)
	S-B		
	S-C		
	S-D		
	S-E		
	S-F		
9	TBH-IN TBH-OUT T3B TF	CN9	connect to cold plate inlet temp. sensor TBH-IN, cold plate outlet temp. sensor TBH-OUT, condenser coil middle temp. sensor T3B, refrigerant tube inlet temp. sensor TF
10	OLP TEMP. SENSOR	CN30	connect to compressor top temp. sensor (5VDC Pulse wave)
11	T2B	CN28	connect to evaporator coil outlet temperature sensor T2B
12	AUXILIARY BOARD	CN27	connect to key board CN1
13	T3 T4 TP	CN26	connect to condenser coil temp. sensor T3, ambient temp. sensor T4, exhaust temp. sensor TP
14	H-PRO,L-RPO	CN29	connect to high and low pressure switch(pin1-pin2&pin3-pin4:5VDC pulse wave)
15	EEVA	CN17	connect to electric expansion valve
	EEVB	CN16	
	EEVC	CN22	
	EEVD	CN14	
	EEVE	CN13	
	EEVF	CN1	
	EEV1	CN53	For Refrigerant Circuit Cooling- Output 12VDC.
	EEV2	CN44	For EVI circuit-output 12VDC
	EEV3	CN3	For Emergency Shut Off During Dissipation- Output 12 VDC
16	H_YL	CN49	connect to high pressure sensor

REFRIGERANT CYCLE DIAGRAM

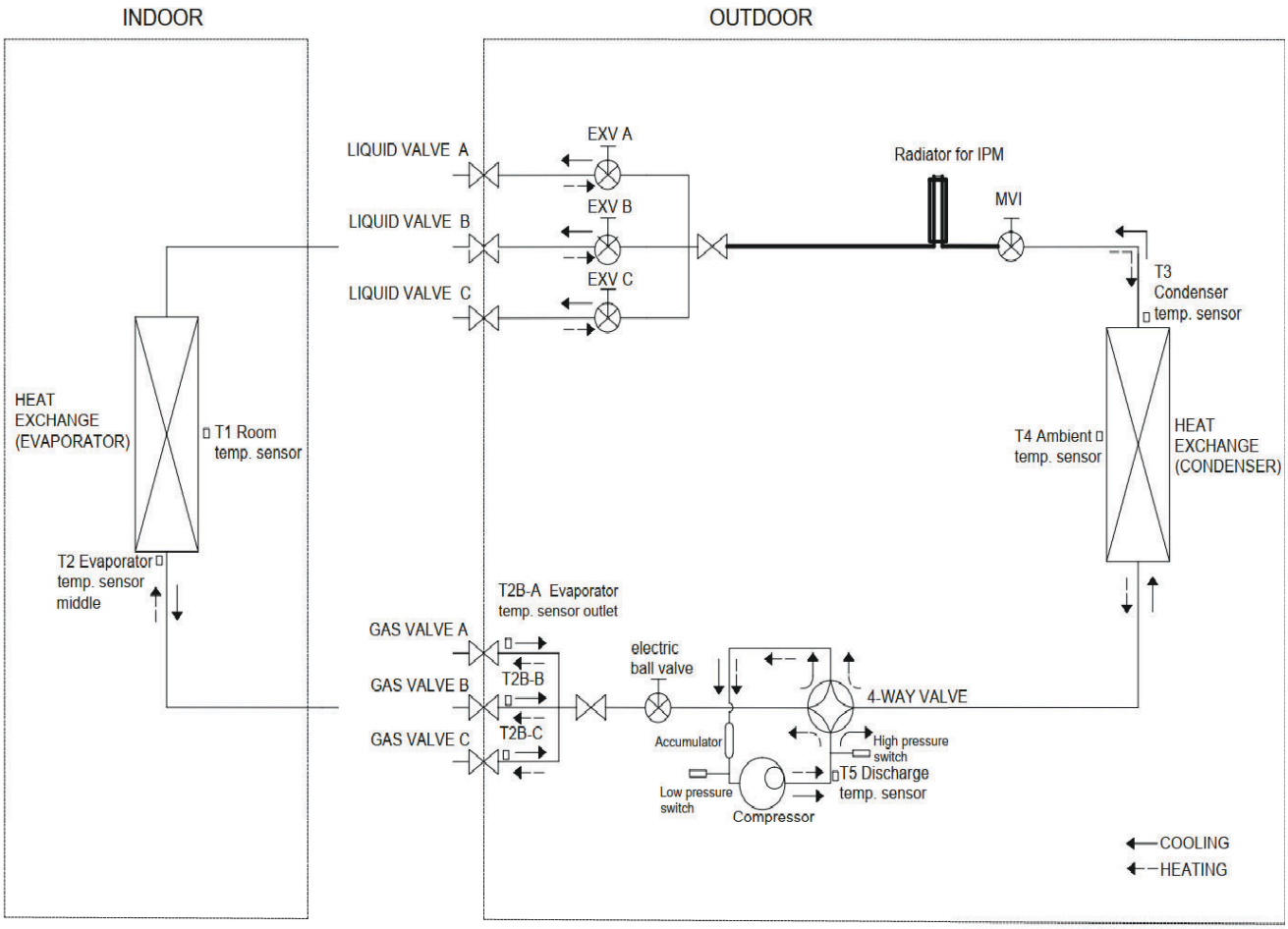

Fig. 13 —Refrigerant Cycle Diagram (Size 18K HH)

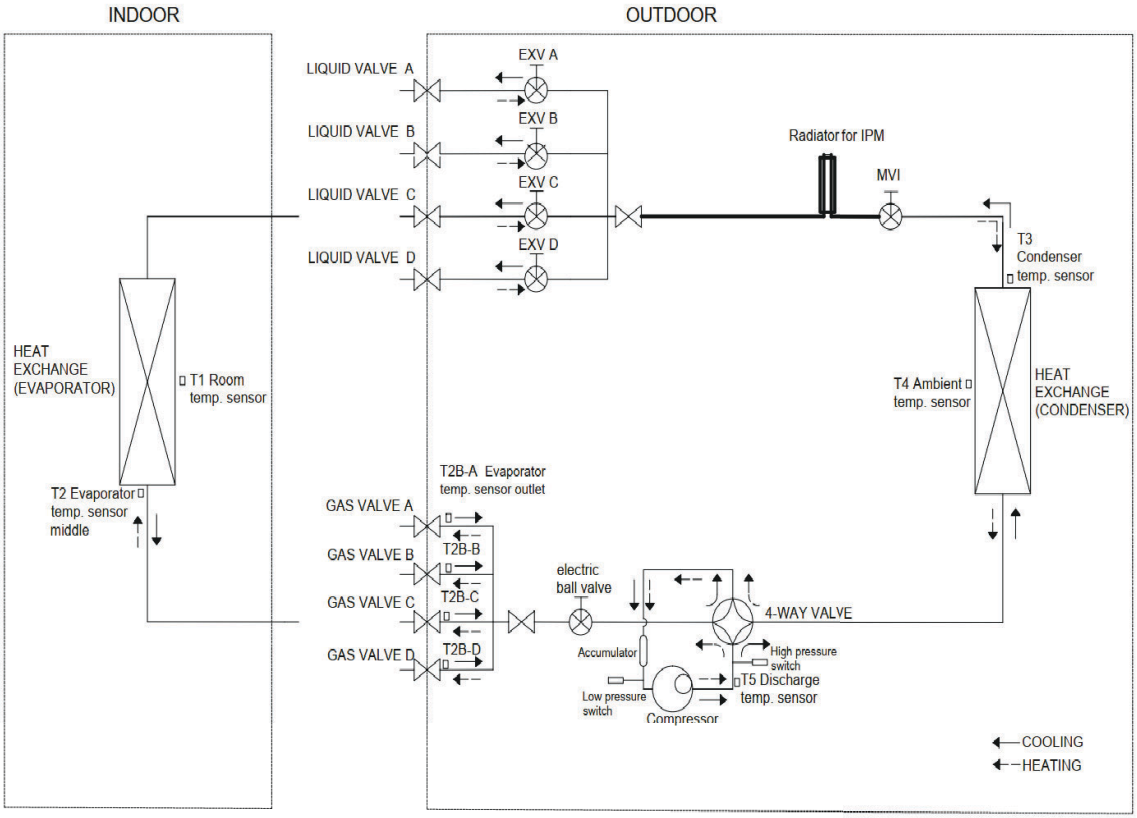

Fig. 14 —Refrigerant Cycle Diagram (Size 24K HH)

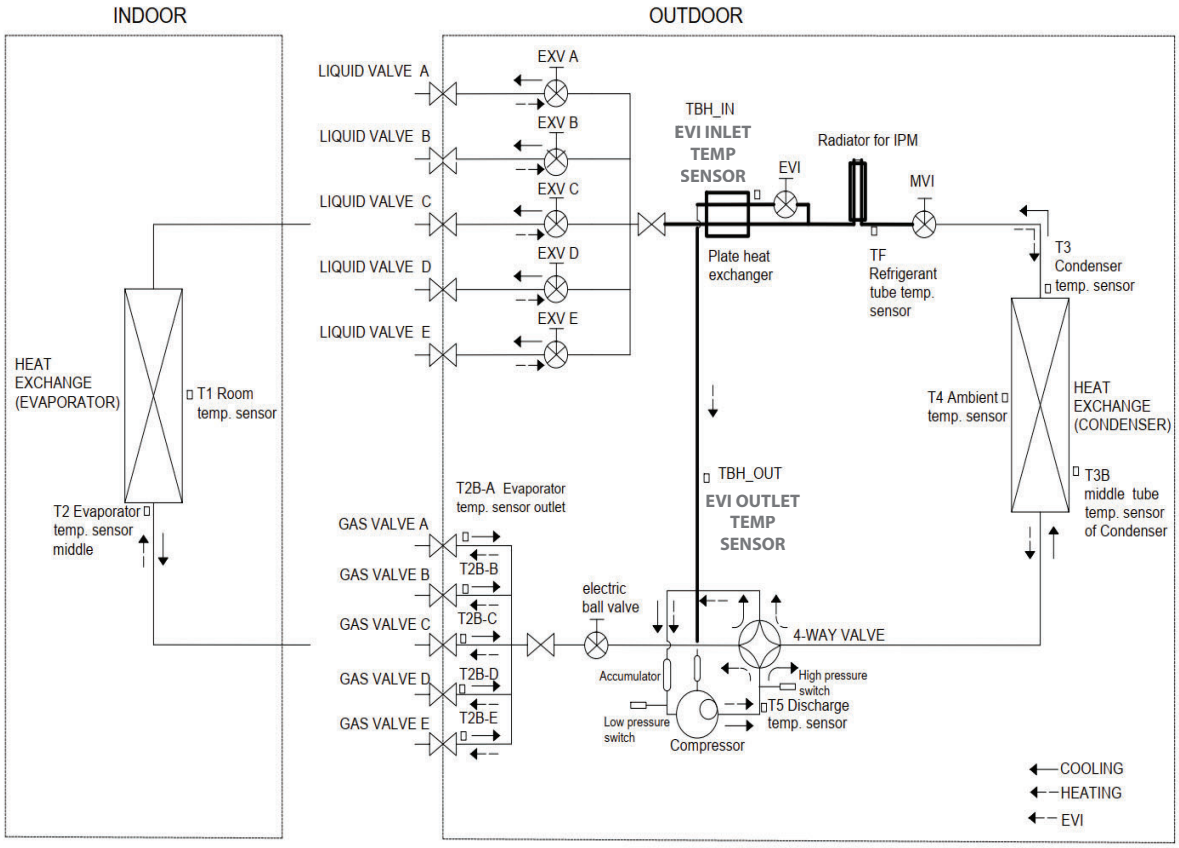

Fig. 15 —Refrigerant Cycle Diagram (Sizes 30K, 36K HH)

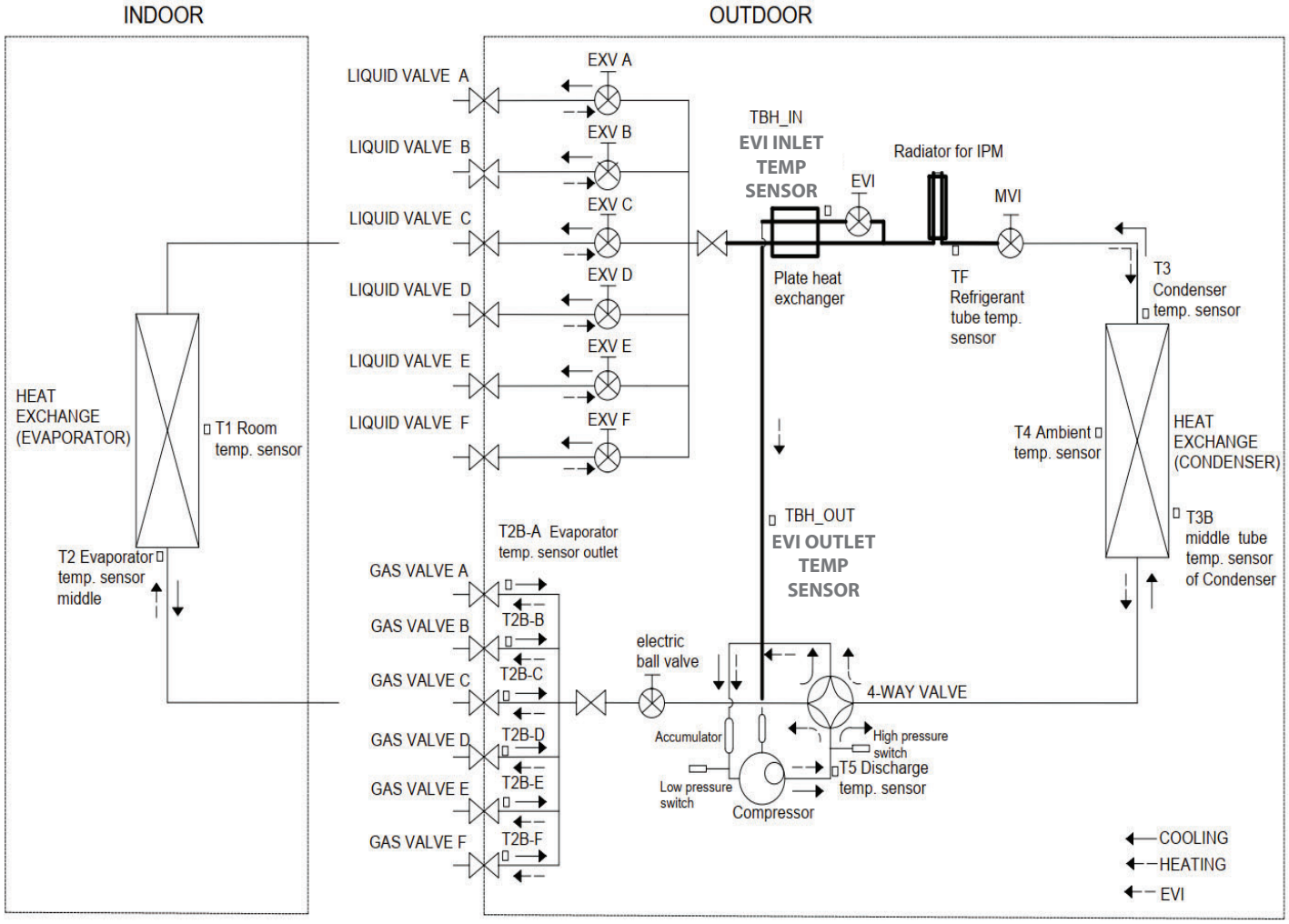

Fig. 16 —Refrigerant Cycle Diagram (Sizes 48K, 55K)

REFRIGERANT LINES

General Refrigerant Line Sizing

1. The outdoor units are shipped with a full charge of R-454B refrigerant. All charges, line sizing, and capacities are based on runs of 25ft. (7.6 m). For runs over 25 ft. (7.6 m), consult Table NOTE:, below, for the proper charge adjustments.
2. The minimum refrigerant line length between the indoor and outdoor units is 10 ft. (3 m).
3. Refrigerant lines should not be buried in the ground. If it is necessary to bury the lines, not more than 36 in (914 mm) should be buried. Provide a minimum 6in (152 mm) vertical rise to the service valves to prevent refrigerant migration.
4. Suction line must be insulated. Use a minimum of 1/2in. (12.7 mm) thick insulation. Closed-cell insulation is recommended in all long-line applications.
5. Special consideration should be given to isolating interconnecting tubing from the building structure. Isolate the tubing so vibration or noise is not transmitted into the structure.

NOTE: Table NOTE: displays the following maximum lengths allowed.

Table 6 – Max Length and Drop Height Based on Model

Outdoor model			SIZE 18K	SIZE 24K	SIZE 30K	SIZE 36K	SIZE 48K	SIZE 55K
Piping and Refrigerant Information	Refrigerant Type	Type	R454B	R454B	R454B	R454B	R454B	R454B
	Charge Amount	lb. (kg)	4.89(2.22)	7.54(3.42)	8.38(3.8)	8.38(3.8)	9.48(4.3)	9.48(4.3)
	Liquid Pipe (size - connection type)	In (mm)	3x1/4in(3x6.35mm)	4x1/4in(4x6.35mm)	5x1/4in(5x6.35mm)	5x1/4in(5x6.35mm)	6x1/4in(5x6.35mm)	6x1/4in(5x6.35mm)
	Suction Pipe (size - connection type)	In (mm)	3x3/8in(3x9.52mm)	3x3/8in+1x1/2in(3x9.52mm+1x12.7mm)	3x3/8in+2x1/2in(3x9.52mm+2x12.7mm)		4x3/8in+2x1/2in(4x9.52mm+2x12.7mm)	
	Min. Piping Length per each indoor unit	ft. (m)	10 (3)					
	Standard Piping Length per each indoor unit	ft. (m)	24.6 (7.5)	24.6 (7.5)	24.6 (7.5)	24.6 (7.5)	24.6 (7.5)	24.6 (7.5)
	Max. outdoor-indoor height difference (OU higher than IU)	ft. (m)	49.21(15)	49.21(15)	49.21(15)	49.21(15)	49.21(15)	49.21(15)
	Max. outdoor-indoor height difference (IU higher than OU)	ft. (m)	49.21(15)	49.21(15)	49.21(15)	49.21(15)	49.21(15)	49.21(15)
	Max. Piping Length with no additional refrigerant charge per System (Standard Piping length x No. of Zones)	ft. (m)	73.8 (22.5)	98.4(30)	123(37.5)	123(37.5)	147.6(45)	147.6(45)
	Additional refrigerant charge (between Standard – Max piping length)	Oz/ft (g/m)	0.16(15)	0.16(15)	0.16(15)	0.16(15)	0.16(15)	0.16(15)
	Max. Length per each indoor unit	ft. (m)	98.4(30)	114.8(35)	114.8(35)	114.8(35)	114.8(35)	114.8(35)
	Total Maximum Piping Length per system	ft. (m)	196.9(60)	262.5(80)	262.5(80)	262.5(80)	262.5(80)	262.5(80)
	Number of IDU	ft. (m)	3	4	5	5	6	6
Piping	Refrigerant Type	Type	R454B	R454B	R454B	R454B	R454B	R454B

NOTE: For piping runs greater than the "Maximum Piping Length with no additional refrigerant charge per System", see the Additional Refrigerant Charge note in the Long-Line Applications section.

PIPING REQUIREMENTS

IMPORTANT: Both refrigerant lines must be insulated separately. The minimum refrigerant line length between the indoor and outdoor units is 10 ft. (3 m). The following lengths are allowed. See Table 6 for the pipe sizes for the outdoor unit. For the indoor unit pipe sizes refer to the indoor unit installation instructions.
Refrigerant Piping:
Line sets to be sized based on the connection size of the indoor unit. Each pipe should be insulated individually.

NOTE: For piping runs greater than the "Maximum Piping Length with no additional refrigerant charge per System," see the Additional Refrigerant Charge note in the Long-Line Applications section.

NOTE: A maximum two (2) AHUs can be added to a MZ system. Refer to the application tables in the product data for allowed combinations. Regardless of size, when two (2) AHUs are connected to any MZ ODU, no other indoor units can be added to the system. If a 30K or 36K AHU is connected to a any outdoor unit, 500g (17.6 Oz) of additional refrigerant charge has to be added to the system. 30K or 36K indoor units are not compatible with phased out models.

General Guidelines:

1. The outdoor units are shipped with a full charge of R-454B refrigerant. For runs over the Maximum Piping Length with no additional refrigerant charge per system, consult "General Refrigerant Line Sizing" on page 24 for proper charge adjustments.
2. Refrigerant lines should not be buried in the ground. If it is necessary to bury the lines, do not bury more than 36 inches (914 mm). Provide a minimum of 6 inch (152 mm) vertical rise to the service valves to prevent refrigerant migration.
3. Both lines must be insulated. Use a minimum of ½-inch (12.7 mm) thick insulation. Closed-cell insulation is recommended in all long-line applications.
4. Special consideration should be given to isolating the interconnecting tubing from the building structure. Isolate the tubing so vibration or noise does not transmit into the structure.

Long-Line Applications

- No change in line sizing is required.

NOTE: Multi-zone outdoor unit compatibility can support up to two (2) AHUs per unit. The combination of up to two (2) AHUs extends to only the 18K and 24K AHU models. In the case that two (2) AHUs are connected to any multi-zone system, no other units may be connected to the outdoor unit, regardless of remaining ports or capacity availability. See "General Refrigerant Line Sizing" on page 24 for unit selection guide criteria. When the 30K or 36K AHU is utilized in multi-zone 48K or 55K ODU applications, 500 grams (17.6 oz) of additional refrigerant charge must be added to the system.

NOTE: If the calculation results in a negative number, no additional refrigerant is required.

When Selecting theD5FS(L)AA 24K/30K/33K/36K Indoor Unit:

A single D5FS(L)AA 24K/30K/33K/36K indoor unit must be connected to the "A" circuit. If there are two 24K/30K/33K/36K indoor units, they must be connected with A and B circuits.

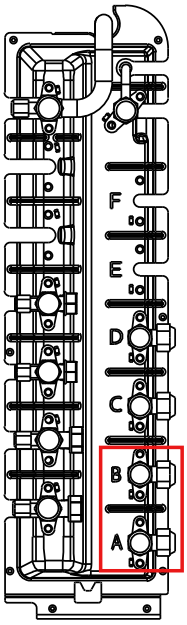

Fig. 17 — A and B Circuits

NOTE: (A,B,C,D,E circuits) If the Air Handler (D5FS(L)AA) is selected as one of the indoor units to be connected to the multi-zone outdoor unit, larger ports should be used with ports that have a 1/2 inch suction pipe diameter.

SYSTEM EVACUATION AND CHARGING

⚠ CAUTION

UNIT DAMAGE HAZARD

Failure to follow this caution may result in equipment damage or improper operation.

Never use the system compressor as a vacuum pump.

Refrigerant tubes and the indoor coil should be evacuated using the recommended 500 micron deep vacuum method. The alternate triple evacuation method may be used if the procedure outlined below is followed.

NOTE: Always break a vacuum with dry nitrogen.

NOTE: All units have a Master Suction and Liquid Line Service Valve.

USING VACUUM PUMP

1. Completely tighten flare nuts A, B, C, D, E, F, (see Fig. 19). Connect the manifold gage charge hose to a charge port of the low side service valve (see Fig. 19).
2. Connect the charge hose to vacuum pump.
3. Fully open the low side of manifold gage (see Fig. 18).
4. Start the vacuum pump.
5. Evacuate using either the deep vacuum or triple evacuation method.
6. After evacuation is complete, fully close the low side of manifold gage and stop the vacuum pump operation.
7. The factory charge contained in the outdoor unit is good for up to 25 ft. (8 m) of line length. For refrigerant lines longer than 25 ft. (8 m), add refrigerant, up to the allowable length.
8. Disconnect the charge hose from the charge connection of the low side service valve.
9. Fully open service valves B and A (see Fig. 19)
10. Securely tighten the service valve caps.

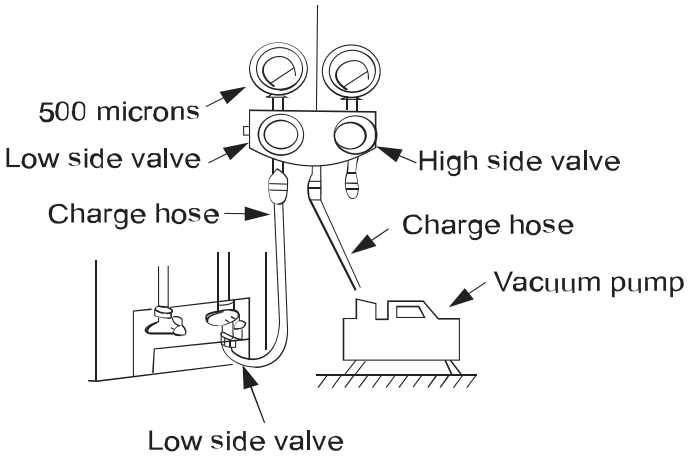

Fig. 18 —Manifold

When Selecting the D5FS(L)AA 24K/30K/33K/36K Indoor Unit

A single 24K/30K/33K/36K indoor unit must be connected to the "A" circuit. If there are two 24K/30K/33K/36K indoor units, they must be connected with A and B circuits.

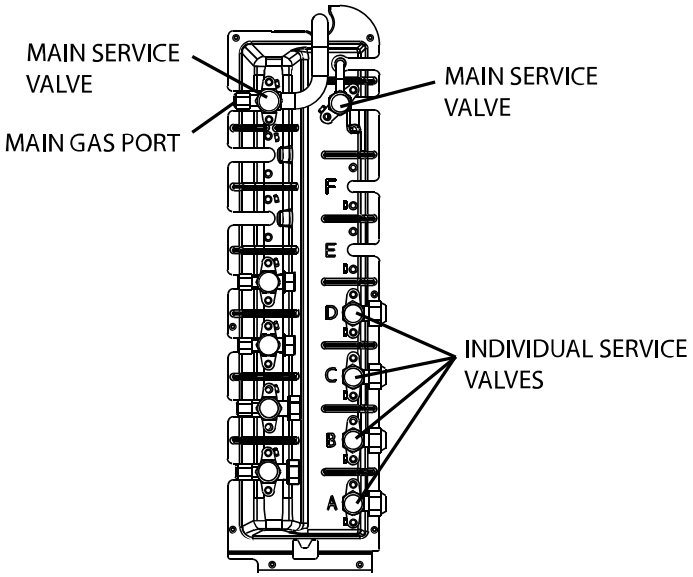

Fig. 19 —Service Valve Locations

NOTE: (A,B,C,D,E circuits) If the Air Handler (D5FSAA only) is selected as one of the indoor units to be connected to the multi-zone outdoor unit, larger ports should be used with ports that have a 1/2 inch suction pipe diameter.

EVACUATION

Evacuation of the system will remove air or nitrogen (non-condensables) as well as moisture. A proper vacuum will assure a tight, dry system before charging with refrigerant. The two methods used to evacuate a system are the deep vacuum method and the triple vacuum method.

DEEP VACUUM METHOD

The deep vacuum method requires a vacuum pump capable of pulling a vacuum of 500 micron and a vacuum gauge capable of accurately measuring this vacuum depth. This method is the most positive way of assuring a system is free of air and moisture (see Figure 20).

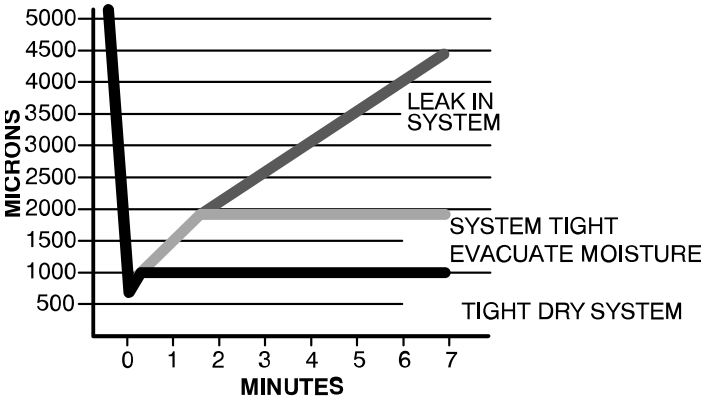

Fig. 20 —Deep Vacuum Graph

TRIPLE EVACUATION METHOD

The triple evacuation method should be used when vacuum pump is not capable of pumping down to 500 microns and system does not contain any liquid water. Refer to Fig. 21 and proceed as follows:

1. Attach refrigeration gauges and evacuate system down to 28 inches of mercury and allow pump to continue operating for an additional 15 minutes.
2. Close service valves and shut off vacuum pump.
3. Connect a nitrogen cylinder and regulator to system and flow nitrogen until system pressure is 2 psig.
4. Close service valve and allow system to stand for 1 hour. During this time, dry nitrogen will be able to diffuse throughout the system absorbing moisture.
5. Repeat this procedure as indicated in Fig. 21. System is now free of any contaminants and water vapor.

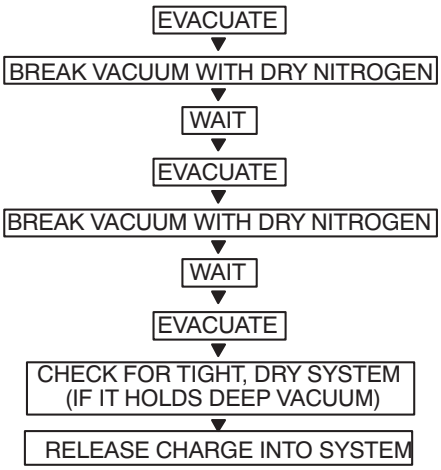

Fig. 21 —Triple Evacuation Method

FINAL TUBING CHECK

Check to be certain factory tubing on both the indoor and outdoor unit has not shifted during shipment. Ensure tubes are not rubbing against each other or any sheet metal. Pay close attention to the feeder tubes, making sure wire ties on feeder tubes are secure and tight.

ELECTRONIC FUNCTIONS

Abbreviations

- T1: Indoor ambient temperature
- T2: Indoor heat exchanger coil temperature
- T2B: Indoor heat exchanger exhaust coil temperature (located on the outdoor unit)
- T3: Outdoor heat exchanger pipe temperature
- T3B: Condenser coil middle temp sensor
- TF: Refrigerant temp. sensor
- TBH: IN-EVI inlet
- TBH: OUT- EVI outlet
- T4: Outdoor ambient temperature
- T5/TP: Compressor discharge temperature

Electric Control Working Environment

- Input voltage: 230V
- Input power frequency: 60Hz
- Indoor fan standard working amp.: <1A
- Outdoor fan standard working amp.: <1.5A
- Four-way valve standard amp.: <1A.

Main Protection

Compressor Restart Delay

The compressor takes one minute to start up the first time. Further restarts take three minutes.

Compressor Discharge Temperature Protection

When the compressor's discharge temperature rises, the running frequency is limited according to the following rules:

- If 221^{0}F (105^{0}C) „T T5<230^{0}F (110^{0}C), maintain the current frequency.
- If the temperature increases and T5>230^{0}F, decrease the frequency to a lower level every two minutes until F1.
- If T>239^{0}F (115¢XC) for ten seconds, the compressor stops and then restarts until T5<194^{0}F (90^{0}C).

Fan Speed Malfunction

If the outdoor fan speed is lower than 100RPM or higher than 2400RPM for 60 seconds or more, the unit stops and the LED displays the EC 07 / E8 failure code.

Inverter Module Protection

The inverter protection module ensures that faults related to current, voltage, or temperature do not damage the inverter.

Manufacturer reserves the right to change, at any time, specifications and designs without notice and without obligations.

Low Voltage Protection

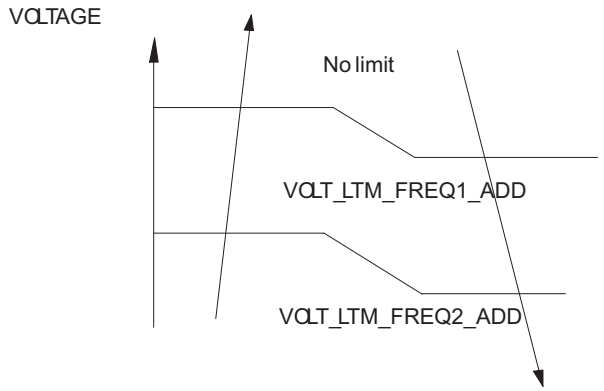

Fig. 22 —Low Voltage Protection

If these protections are triggered, the A/C unit stops and the LED displays the failure code. The unit restarts three minutes after the protection mechanism turns off.

NOTE: If the low voltage protection triggers and the voltage does not restore to normal within three minutes, the protection remains active even after the unit restarts.

Compressor Current Limit Protection

The temperature interval for the current limit is the same as the range of the T4 frequency limit.

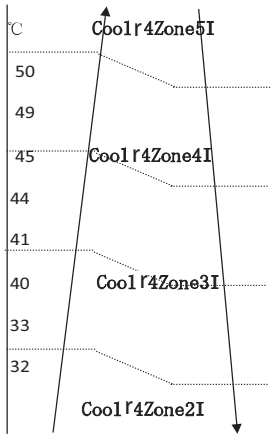

Fig. 23 —Cooling Mode Limit

Table 7 – Cooling Mode

CoolReturnI	Difference Between Current Limit and Shutdown Current
CoolT4Zone5I	Cooling T4≥50 °C current limit value
CoolT4Zone4I	Cooling 49＞T4≥45 °C current limit value
CoolT4Zone3I	Cooling 44＞T4≥41°C current limit value
CoolT4Zone2I	Cooling 40 > T4≥33 °C current limit value
CoolT4Zone1I	Cooling 32＞T4 °C current limit value
CoolStopI	Cooling stop protection current value

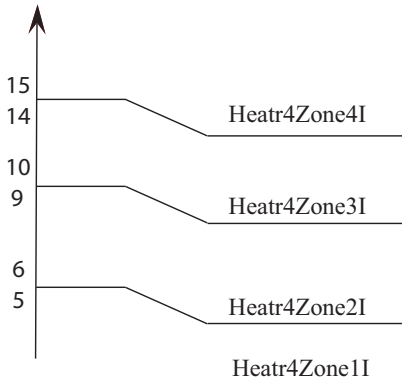

Fig. 24 —Heating Mode Limit

Table 8 – Heating Mode

HeatReturnI	Difference Between Current Limit and Shutdown Current
HeatT4Zone4I	Heating T4≥15°C current limit value
HeatT4Zone3I	Heating 14＞T4≥10°C current limit value
HeatT4Zone2I	Heating 9＞T4≥6°C current limit value
HeatT4Zone1I	Heating 5＞T4 current limit value
HeatStopI	Heating stop protection current value

Indoor / Outdoor Units Communication Protection

If the indoor units do not receive the feedback signal from the outdoor units for two consecutive minutes, the unit stops and displays a failure code.

High Condenser Coil Temperature Protection

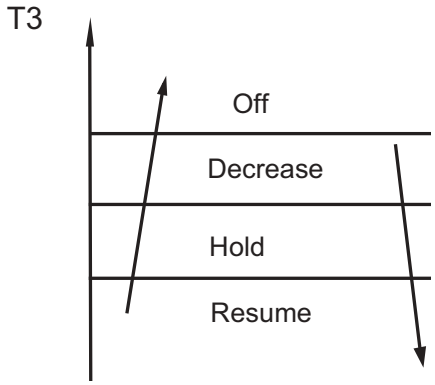

Fig. 25 —High Condenser Coil Temperature Protection

Outdoor Unit Anti-Freezing Protection

When T2<39°F (4°C) for 250 seconds or T2< 32°F (0°C), the indoor unit capacity demand is zero and resumes the normal operation when T2>46.4°F (8°C) and the protection time is no less than three minutes.

Oil Return

Rules for Operation:

1. If the compressor frequency remains lower than the frequency set for the setting time, the unit raises the frequency to the frequency set for the setting time and then resumes the former frequency.
2. The EXV continues at 300p while the indoor units maintain their operation. If the outdoor ambient temperature is higher than the set frequency during the oil return, the unit stops the oil return process.

Low Outdoor Ambient Temperature Protection

When the compressor is off and T4 is lower than -31°F (-35°C) for ten seconds, the unit stops and displays “LP.”

When the compressor is on and T4 remains lower than -40°F (-40°C) for ten seconds, the unit stops and displays “LP.”

When T4 is no lower than -25.6°F(-32°C) for ten seconds, the unit exits protection.

Controls and Functions

Capacity Request Calculation

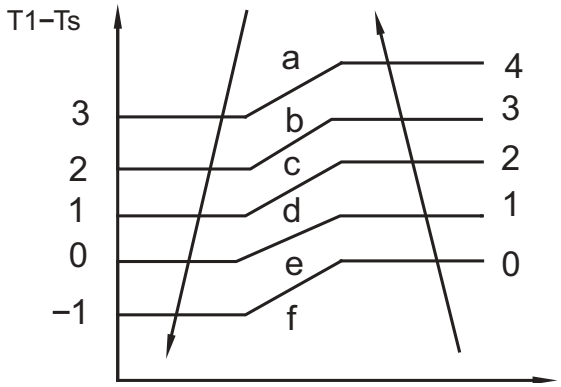

Fig. 26 —Cooling Mode Capacity

Table 9 – Cooling Mode Code

Capacity Area	a	b	c	d	e	f
Normal Code (N)	3	2	1.5	1	0.5	0

Table 10 – Cooling Mode HP

Model	9K	12K	18K	24K
HP	1.0	1.2	1.5	2.5

NOTE: The final result is an integer.

Use Table 12 and the final capacity request to confirm the operating frequency.

Table 11 – Cooling Mode - Frequency

Frequency (Hz)	0	COOL_F1	COOL_F2	...	COOL_F24	COOL_F25
Amendatory Capacity Demand	0	1	2	...	24	25

The maximum running frequency is adjusted according to the outdoor ambient temperature.

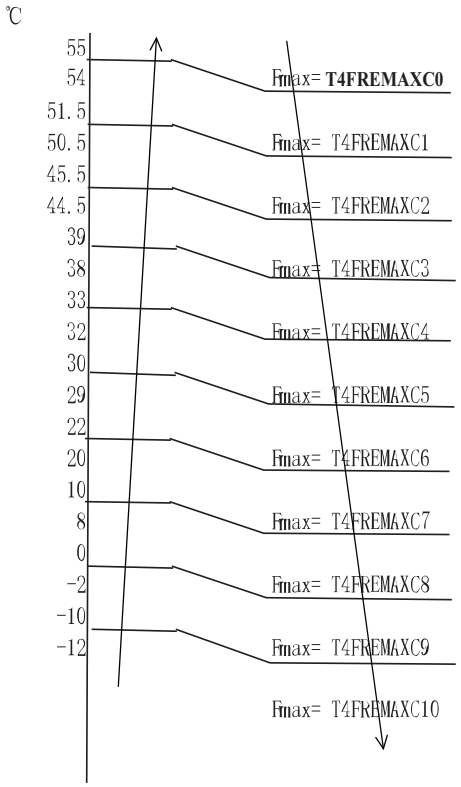

Fig. 27 —Maximum Running Frequency

Heating Mode

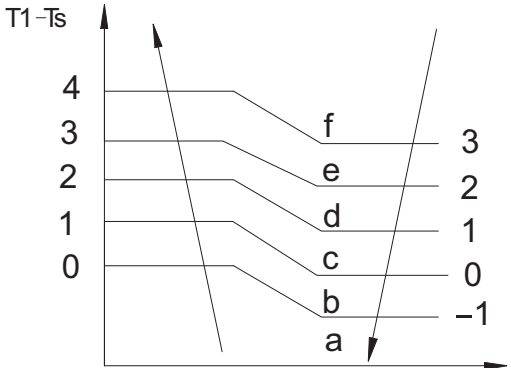

Fig. 28 —Heating Mode Capacity

Table 12 – Heating Mode Code

Capacity Area	a	b	c	d	e	f
Normal Code (N)	3	2	1.5	1	0.5	0

Table 13 – Heating Mode HP

Model	9K	12K	18K	24K
HP	1.0	1.2	1.5	2.5

NOTE: The final result is an integer.

Modify the result according to a T2 average (correction).

NOTE: Average value of T2; sum of T2 value of all indoor units)/ (indoor units number).

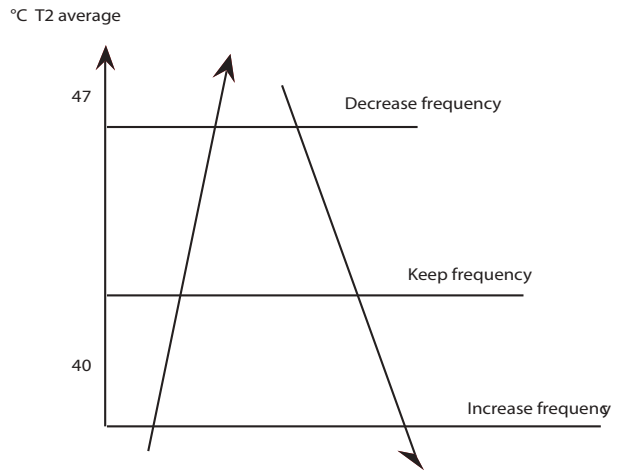

Fig. 29 —T2 Average

Use Table 15 and the final capacity request to confirm the operating frequency.

Table 14 – Heating Mode - Frequency

Frequency (Hz)	0	HEAT_F1	HEAT_F2	...	HEAT_F24	HEAT_F25
Amendatory Capacity Demand	0	1	2	...	24	25

The maximum running frequency is adjusted according to the outdoor ambient temperature.

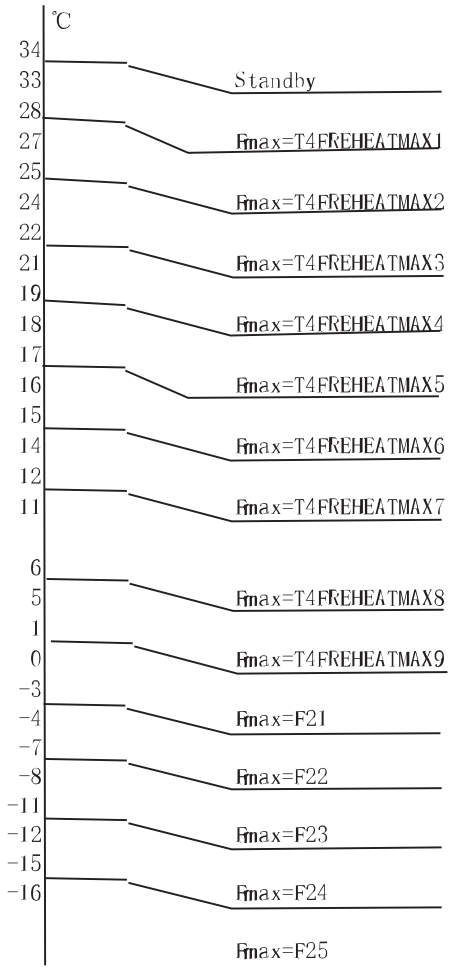

Fig. 30 —T2 Average - Ambient Temperature

Defrosting Control

Defrosting Conditions

After the compressor starts and enters a normal operation, mark the minimum value of T3 from the 10th to the 15th minute as T30.

If any one of the following conditions is satisfied, the unit enters the Defrosting mode:

1. If the compressor's cumulative running time reaches 29 minutes and T3<TCDI1 and T3+T30SUBT3ONE ¡ØT30.
2. If the compressor cumulative running time reaches 35 minutes and T3< TCDI2 and T3+ T30SUBT3TWO¡ØT30.
3. If the compressor cumulative running time reaches 40 minutes and T3<ƒ{24¢XC for 3 minutes.
4. If the compressor cumulative running time reaches 120 minutes and T3<ƒ{15^{0}C.

Defrost Stop Conditions

If any of the following conditions is satisfied, defrosting ends and the unit returns to the normal heating mode:

....T3 rises above than TCDE1^{0}C

....T3 remains at TCDE2^{0}C or above for 80 seconds

....Unit runs for ten consecutive minutes in DEFROSTING mode

Defrosting Actions

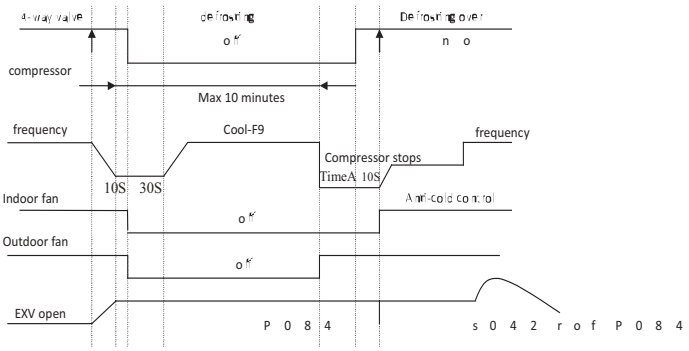

Fig. 31 —Defrosting Action

End Defrosting Action

If any one of following items is satisfied, defrosting stops and the machine enters the normal Heating mode.

1. T3 > TempQuitDefrost_ADD °C
2. The defrosting time achieves 10 minutes
3. Turn to other modes or OFF

Outdoor Fan Control

Cooling Mode

Under normal operating conditions, the system chooses the running fan speed according to the ambient temperature.

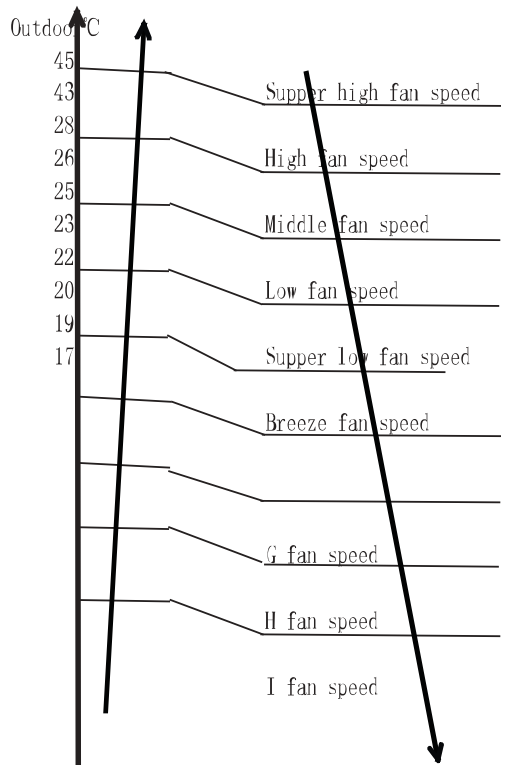

Fig. 32 —Cooling Mode - Outdoor Fan Control

When low ambient cooling is in effect:

The outdoor fan speed controls logic (low ambient cooling).

When T4 < 59.(15°C and T3 < 86.(30°C), the unit enters into the low ambient cooling mode. The outdoor fan chooses a speed according to T3.

When T3.100.4.(38°C) or when T4.68.(20°C), the outdoor fan chooses a speed according to T4 again.

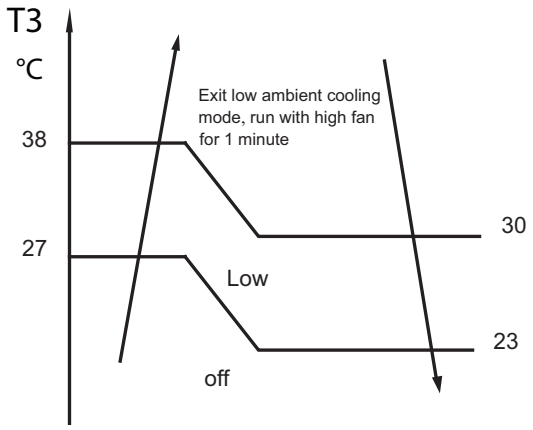

Fig. 33 —Cooling Mode - Low Ambient

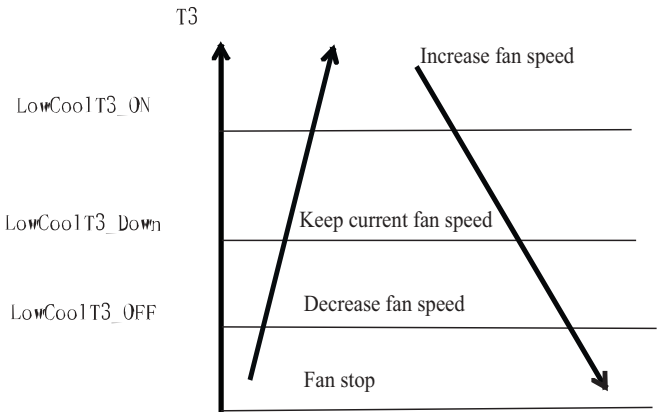

Fig. 34 —Cooling Mode - Low Ambient

Heating Mode

Under normal operating conditions, the system chooses a running fan speed according to the ambient temperature.

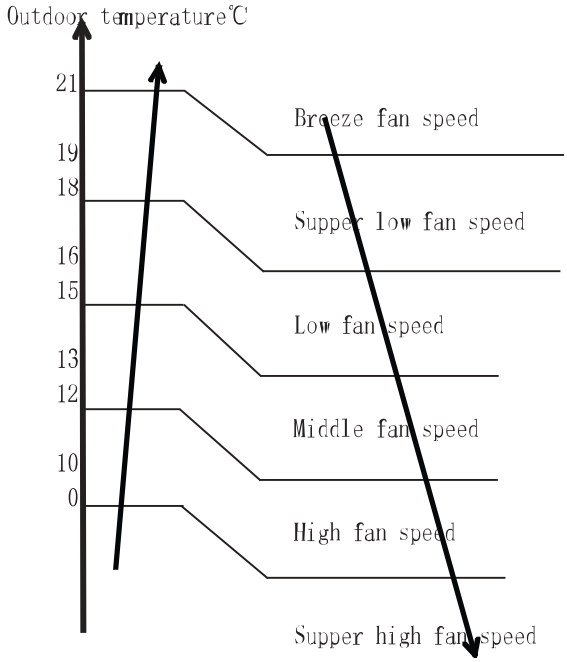

Fig. 35 —Heating Mode - Ambient Temperature

Electronic Expansion Valve (EXV) Control

1. EXV is fully closed when power is turned on. The EXV will standby with the 350P open and then opens to the target angle after the compressor starts.

2. EXV closes with - 160P when the compressor stops. Then EXV will standby with the 350P open and then opens to the target angle after the compressor starts.

3. The action priority of the EXVs is A-B-C-D-E.

4. Compressor and the outdoor fan start operation only after the EXV is initialized.

Cooling Mode

The initial open angle of EXV is dependent on indoor model size, adjustment range is 100-400p. When the unit starts to work for three minutes, the outdoor unit receives the indoor units's (of capacity demand) T2B information and calculates their average.

After comparing each indoor T2B with the average. the outdoor gives the following modification commands: if the T2B>average, the relevant valve needs more 16p open. If the T2B = average, the relevant valve's? open range remains. If the T2B<average, the relevant valve needs more 16p close. This modification will be carried out every two minutes.

Heating Mode

The initial open angle of EXV is 250P, dependent on indoor model size, adjustment range is 100-400p. After the unit works for three minutes, the outdoor unit receives the indoor units (of capacity demand) T2 information and calculates the their average. After comparing each indoor unit's T2 with the average, the outdoor unit gives the following modification commands.

If the T2<average +2, the relevant valve needs more 16p close. If average +2.the T2. average.2, the relevant valve's open range remains. If the T2< average.2, the relevant valve needs more 16p open.

This modification occurs every two minutes.

Four-way valve control

In HEATING mode, the four-way valve opens. In DEFROST mode, the four way valve operates in accordance to the Defrosting action. In other modes, the four-way valve is closed.

When the HEATING mode changes to other modes, the four-way valve closes after the compressor is off for two minutes. Failure or protection (not including discharge temperature protection, high and low pressure protection), the four-way valve immediately shuts down.

Dissipation Shut Off Valve Logic

The 18K-55K MZU's are equipped with an emergency shut off valve that will trigger when a leak is detected at the IDUs. When a refrigerant leak is detected at any indoor unit, the following will occur:

1. The MZU will shut off
2. All EEVs will close; the emergency shut off valve in the MZU will close (the 18K does not have this shut off valve)
3. All IDUs will operate with turbo fan speed and louvers will fully open
4. The IDU detecting a leak will have a continuous audible alarm and error code EHC1 will be displayed
5. All indoor units not detecting a leak will display ECC1

Once the leak drops below the LFL detection threshold, normal operation can be resumed by holding down the MZU inquiry button for 10 seconds. The MZU will resume normal operation automatically after 2.5 hours without resetting providing a refrigerant leak is not detected.

GENERAL TROUBLESHOOTING

SAFETY CAUTION

WARNING

Be sure to turn off all power supplies or disconnect all wires to avoid electric shock. While checking indoor/outdoor PCB, equip yourself with anti-static gloves or wrist strap to avoid damage to the board.

WARNING

Before attempting to work on serviceable electronic components, wait 10 minutes after removing power to the ODU in order to ensure that the capacitors have fully discharged. Failure to do so may result in bodily harm or death.

This section provides the required flow charts to troubleshoot problems.

NOTE: Information required in the diagnoses can be found either on the wiring diagrams or in the appendix.

Required Tools

The following tools are needed when diagnosing the units:

- Digital multimeter
- Screw drivers (Phillips and straight head)
- Needle-nose pliers
- Refrigeration gauges
- Wrenches

Recommended Steps

1. Refer to the diagnostic hierarchy charts below and determine the problem at hand.
2. Go to the chart listed in the diagnostic hierarchy and follow the steps in the chart for the selected problem.

For the ease of service, the systems are equipped with diagnostic code display LED's on both the indoor and outdoor units. The outdoor

diagnostic display is on the outdoor unit board and is limited to very few errors. Refer to the Indoor Unit's Service Manual to determine the error code display method. If possible always check the diagnostic codes displayed on the indoor unit first.

Problems may occur that are not covered by a diagnostic code, but are covered by the diagnostic flow charts. These problems are typical air conditioning mechanical or electrical issues that can be corrected using standard air conditioning repair techniques.

For problems requiring measurements at the control boards, note the following:

1. Always disconnect the main power.
2. When possible check the outdoor board first.
3. Start by removing the outdoor unit top cover.
4. Reconnect the main power.
5. Probe the outdoor board inputs and outputs with a digital multi-meter referring to the wiring diagrams.
6. Connect the red probe to hot signal and the black probe to the ground or negative.
7. Note that some of the DC voltage signals are pulsating voltages for signal. This pulse should be rapidly moving at all times when there is a signal present.
8. If it is necessary to check the indoor unit board, you must start by disconnecting the main power.
9. Remove the front cover of the unit and then control box cover.
10. Carefully remove the indoor board from the control box. Place it face up on a plastic surface (not metal).
11. Reconnect the main power and repeat steps 5, 6, and 7.
12. Disconnect the main power before reinstalling the board to avoid shock hazard and board damage.

Dr. SMART - Inverter Test Tool

NOTE: If using the inverter test tool for troubleshooting, shut off power, remove the electrical panel and locate the cable that is already connected to the test port on the outdoor unit. Connect the test tool to the cable with the connector provided with the test tool. After the maintenance is completed, insert the female end back into the port.

For the R454B single zone ODU with capacity less than 24K, there will be the test tool connector. For 24K HH and 30K-60K single zone ODU, there is a diagnosis/check board which has digital display on it, you can read the parameters from it directly.

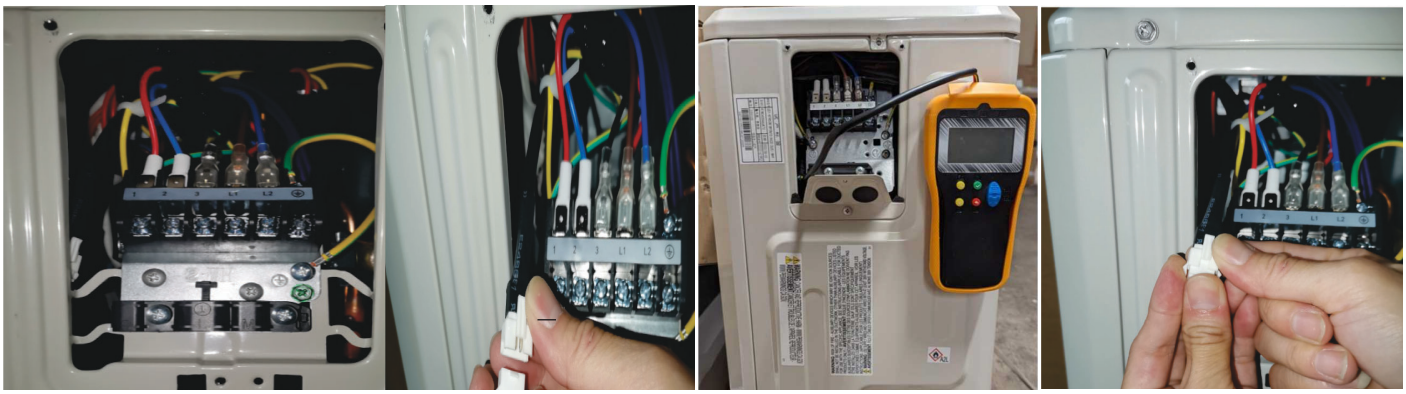

Step 1 Step 2 Step 3 Step 4

Fig. 36 —Inverter Test Tool Maintenance

Connect the Dr. SMART tool to the white terminal as shown in Step 3 above.

Fig. 37 —Dr. SMART Tool

NOTE: These pictures is for reference only. Actual appearance may vary.

ERROR CODES

Error Display

Display	Indoor/Outdoor Code	Malfunction or Protection	Solution (Refer to Page)
df	N/A	Defrosting	Normal Display, not error code
FC	N/A	Forced cooling	
FH CC	IDU	Refrigerant Sensor Error	page 70
EC 07 / EC 71	ODU	Fan speed out of control	page 44
EC 72	ODU	Lack phase failure of outdoor DC fan motor	page 46
EC 51	ODU	EEPROM parameter error	page 41
EH 00 / EH0A	IDU & ODU	EEPROM Malfunction Error Diagnosis and Solution	page 41
EC 52	ODU	Coil temp. sensor(T3) error	page 48
EC 53	ODU	Ambient temp. sensor(T4) error	page 48
EC 54	ODU	COMP. discharge temp. sensor (TP) error	page 48
EC 55	ODU	IPM module temperature sensor malfunction	page 49
EL 0C	IDU & ODU	System Lacks Refrigerant Diagnosis and Solution	page 50
EH b3	IDU	Communication Malfunction Between Wire and Master Control	page 69
EH bA	IDU & ODU	Communication Malfunction Between Wire and Master Control	page 70
EH C1	IDU	Refrigerant Sensor Detects Leakage	page 71
EH C2	IDU	Refrigerant Sensor is Out of Range and Leakage is Detected	page 71
EH 3b	IDU & ODU	External Fan DC Bus Voltage is Too High	page 69
EH 0b	IDU	IDU Main Control Board and Display Board Communication Error Diagnosis and Solution	page 72
EH 0E	IDU	Water-Level Alarm Malfunction Diagnosis and Solution	page 51
EC 57	ODU	Refrigerant pipe temperature sensor error	page 48
EC 5A/ EC 5B/ EC 5E	IDU	Open Circuit or Short Circuit of Temperature Sensor	page 48
EC 5C	ODU	Suction Transducer Failure	page 47
EL 01	IDU & ODU	Communication error	page 42
EL 16	ODU	Communication malfunction between adapter board and ODU main board	page 42
FL 09	IDU & ODU	Mismatch between the new and old platforms diagnosis and solution	page 73
PC A1	IDU	Condensation protection of refrigerant pipe	page 55
PC 00	ODU	IPM module protection	page 52
PC 01	ODU	ODU Voltage Protection Diagnosis and Solution	page 53
PC 02	ODU	Compressor top (or IPM) temp. protection	page 56
PC 04	ODU	Inverter Compressor Drive Error Diagnosis and Solution	page 59
PC 06	ODU	Discharge temperature protection of compressor	page 64
PC 08	ODU	Outdoor overcurrent protection	page 65
PC 0A	ODU	High temperature protection of condenser	page 66
PC 0F	ODU	PFC module protection	page 67
PC 0L	ODU	Low Ambient Temperature Protection	page 69
PC 10	ODU	Low AC voltage protection	page 68
PC 11	ODU	Main control board DC bus high voltage protection	page 68
PC 12	ODU	Main control board DC bus high voltage protection /341 MCE error	page 68
PC 13	ODU	The AC power is cut off or the AC voltage detection circuit fails	page 54
PC 03	IDU	Pressure Protection (low or high pressure)	page 57

Manufacturer reserves the right to change, at any time, specifications and designs without notice and without obligations.

Display	Indoor/Outdoor Code	Malfunction or Protection	Solution (Refer to Page)
PC 30	ODU	System high pressure protection	page 57
PC 31	ODU	Low Pressure Protection	page 57
PC 40	ODU	Communication error between ODU main chip and compressor driven chip	page 60
PC 41	ODU	Compressor current sampling failure	page 61
PC 42	ODU	Compressor start failure of outdoor unit	page 65
PC 43	ODU	Compressor lack phase protection	page 62
PC 44	ODU	Zero speed protection	page 65
PC 45	ODU	IR chip drive failure	page 63
PC 46	ODU	Compressor speed has been out of control	page 65
PC 49	ODU	Compressor overcurrent failure	page 65
LC 06	ODU	High temperature protection of Inverter module (IPM)	page 56
PH 90	IDU & ODU	High temperature protection of evaporator	page 74
PH 91	IDU & ODU	Low temperature protection of evaporator	page 75

OUTDOOR UNIT DIGITAL DISPLAY

A digital display is featured on the outdoor PCB. The LED displays different codes in the following situations:

- Standby: “- -.”
- Compressor operation: the running frequency.
- Defrosting mode: “dF” or alternative displays between running frequency and “dF” (ach appears for 0.5s.)
- Compressor pre-heating: “PH” or alternative displays between running frequency and “PH” (each appears for 0.5s.)
- Oil return process: “RO” or alternative displays between running frequency and “RO” (each appears for 0.5s.)
- Low ambient cooling mode: “LC” or alternative displays between running frequency and “LC” (each appears for 0.5s.)
- Forced cooling mode: the LED displays “FC” or alternative displays between running frequency and “FC” (each appears for 0.5s).
- PFC module protection occurs three times within 15 minutes: “PC 0F” or alternates between displays of running frequency and “PC 0F” (each appears for 0.5s.)

In protection or malfunction, the LED displays an error code or protection code.

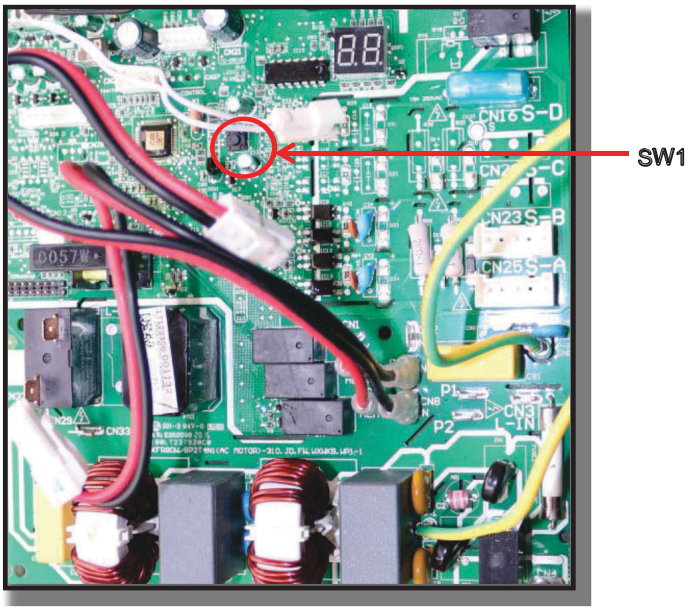

Fig. 38 —Outdoor PCB (18K Shown)

OUTDOOR UNIT DISPLAY

Outdoor Unit Point Function

A check switch is included on the outdoor PCB.

Push SW1 to check the unit’s status while running. The digital display displays codes (see “Error Display” on page 34) each time the SW1 is pushed.

OUTDOOR UNIT DISPLAY (CONT)

Number of Presses	Display	Remark
0	Normal display	Displays running frequency, running state, or malfunction code
1	Quantity of indoor units with working connection	Display Number of indoor unit
2	Outdoor unit running mode code	Standby: 0,Fan only: 1, Cooling/Drying: 2, Heating: 3, Forced cooling: 6, Forced defrosting: A
3	Indoor unit A capacity	The capacity unit is horse power. If the indoor unit is not connected, the digital display shows the following: “--” (6K:0.6HP, 7K:0.8HP, 9K:1.0HP, 12K:1.2HP, 18K:1.5HP, 24K:2.5HP, 30K:3.0HP, 36K:3.2HP)
4	Indoor unit B capacity	
5	Indoor unit C capacity	
6	Indoor unit D capacity	
7	Indoor unit E capacity	
8	Indoor unit A capacity demand code	Norm code *HP (6K:0.6HP, 7K:0.8HP, 9K:1.0HP, 12K:1.2HP, 18K:1.5HP, 24K:2.5HP, 30K:3.0HP, 36K:3.2HP)
9	Indoor unit B capacity demand code	
10	Indoor unit C capacity demand code	
11	Indoor unit D capacity demand code	
12	Indoor unit E capacity demand code	
13	Outdoor unit amendatory capacity demand code	
14	The frequency corresponding to the total indoor units' amendatory capacity demand	
15	The frequency after the frequency limit	
16	The frequency sending to compressor control chip	
17	Indoor unit A evaporator outlet temperature (T2BA)	If the temperature is lower than -9°C, the digital display shows “-9.” If the temperature is higher than 70°C, the digital display shows “70.” If the indoor unit is not connected, the digital display shows: “--”
18	Indoor unit B evaporator outlet temperature (T2BB)	
19	Indoor unit C evaporator outlet temperature (T2BC)	
20	Indoor unit D evaporator outlet temperature (T2BD)	
21	Indoor unit E evaporator outlet temperature (T2BE)	
22	Indoor unit A room temperature (T1A)	If the temperature is lower than 0°C, the digital display shows “0.” If the temperature is higher than 70°C, the digital display shows “70.” If the indoor unit is not connected, the digital display shows: “--”
23	Indoor unit B room temperature (T1B)	
24	Indoor unit C room temperature (T1C)	
25	Indoor unit D room temperature (T1D)	
26	Indoor unit E room temperature (T1E)	

Manufacturer reserves the right to change, at any time, specifications and designs without notice and without obligations.

Number of Presses	Display	Remark
27	Indoor unit A evaporator temperature (T2A)	If the temperature is lower than -9°C, the digital display shows “-9.” If the temperature is higher than 70°C, the digital display shows “70.” If the indoor unit is not connected, the digital display shows: “--”
28	Indoor unit B evaporator temperature (T2B)	
29	Indoor unit C evaporator temperature (T2C)	
30	Indoor unit D evaporator temperature (T2D)	
31	Indoor unit E evaporator temperature (T2E)	
32	Condenser pipe temperature (T3)	
33	Outdoor ambient temperature (T4)	
34	Compressor discharge temperature (TP)	The display value is between 30–129°C. If the temperature is lower than 30°C, the digital display shows “30.” If the temperature is higher than 99°C, the digital display shows single and double digits. For example, If the display shows 0.5, so 0.5 multiplied by 10 to become 5, then added to 100 to become 105°C.
35	AD value of current	The display value is a hex number. For example, the digital display tube shows “Cd”, so C*161+d*160=12*16+13=205, it means AD value is 205. AD value is detected by the chip. for M5OX631-36HFN10-M1XD&M5OX631-36HFN10-M1X, actual AD value is AD value plus 60
36	AD value of AC voltage	
37	AD value of DC voltage	
38	EXV open angle for A indoor unit	Actual data/4. If the value is higher than 99, the digital display shows single and double digits. For example, if the digital display shows “2.0”, so 2.0 multiplied by 10 to become 20, then added to 100 to become 120, the EXV open angle is 120×4=480p.
39	EXV open angle for B indoor unit	
40	EXV open angle for C indoor unit	
41	EXV open angle for D indoor unit	
42	EXV open angle for E indoor unit	
43	MVI open angle (for some models)	
44	EXI open angle (for some models)	
45	Frequency limit symbol	Bit7
		Bit6
		Bit5
		Bit4
		Bit3
		Bit2
		Bit1
		Bit0
46	T2B fault	00:No fault,01:T2B-A fault, 02:T2B-B fault, 03:T2B-C fault,04:T2B-D fault, 05:T2B-E fault, 06:T2B-F fault (The display priority is A-B-C-D-E-F)

Manufacturer reserves the right to change, at any time, specifications and designs without notice and without obligations.

Number of Presses	Display	Remark
47	Average value of T2	(Sum T2 value of all indoor units)/(number of indoor units in good connection)(The heating is the average value of T2, and the cooling is the average value of T2B) If the temperature is lower than -9°C, the digital display shows “-9”.
48	Outdoor unit fan speed	See next list
49	Reason of stop	
50~59	Reserved	
60	Air injection enthalpy inlet temperature (for hyper heat models)	If the temperature is lower than -9°C, the digital display shows “-9”. If the temperature is higher than 70°C, the digital display shows “70.” If the indoor unit is not connected, the digital display shows: “--”
61	Air injection enthalpy outlet temperature (for hyper heat models)	
62	Condenser coil middle temperature (for hyper heat models)	
63	Refrigerant tube inlet temperature (for hyper heat models)	
64	Target discharge temperature	The display value is between 0–199°C. If the temperature is lower than 30°C, the digital display shows “30.” If the temperature is higher than 99°C, the digital display shows single and double digits. For example, If the display shows 0.5, so 0.5 multiplied by 10 to become 5, then added to 100 to become 105°C..
65	Indoor unit F capacity	The capacity unit is horse power. If the indoor unit is not connected, the digital display shows the following: “--”
66	Indoor unit F capacity demand code	Norm code *HP (9K: 1HP,12K: 1.2HP,18K: 1.5HP)
67	Indoor unit F evaporator outlet temperature (T2BF)	If the temperature is lower than -9°C, the digital display shows “-9.” If the temperature is higher than 70°C, the digital display shows “70.” If the indoor unit is not connected, the digital display shows: “--”
68	Indoor unit F room temperature (T1F)	If the temperature is lower than 0°C, the digital display shows “0.” If the temperature is higher than 70°C, the digital display shows “70.” If the indoor unit is not connected, the digital display shows: “--”
69	Indoor unit F evaporator temperature (T2F)	If the temperature is lower than -9°C, the digital display shows “-9.” If the temperature is higher than 70°C, the digital display shows “70.” If the indoor unit is not connected, the digital display shows: “--”
70	EXV open angle for F indoor unit	Actual data/4. If the value is higher than 99, the digital display shows single and double digits.
71	IPM module temperature	The display value is between 0–199°C. If the temperature is higher than 99°C, the digital display shows single and double digits. For example, If the display shows 5.0, so 5.0 multiplied by 10 to become 50, then added to 100 to become 150°C.
72	The high pressure sensor detects the pressure corresponding to the condensation temperature (Tc)	The digital display shows: “--”
73	Reserved	

Quick Maintenance by Error Code

Part requiring replacement	Error Code											
	EL 01	EC 50	EC 51	EC 52	EC 53	EC 54	EC 55	EC 56	EC 57	EC 5A	EC 5b	EC5E
Indoor PCB	√	x	x	x	x	x	x	x	x	x	x	x
Outdoor PCB	√	√	√	√	√	√	√	√	√	√	√	√
ODU coil temp. sensor	x	√	x	√	x	x	x	x	x	x	x	x
ODU ambient temp. sensor	x	√	x	x	√	x	x	x	x	x	x	x
COMP. discharge temp. sensor	x	√	x	x	x	√	x	x	x	x	x	x
IPM module temperature sensor	x	x	x	x	x	x	√	x	x	x	x	x
IDU coil outlet temp. sensor	x	x	x	x	x	x	x	√	x	x	x	x
Refrigerant pipe temperature sensor	x	x	x	x	x	x	x	x	√	x	x	x
Enthalpy inlet temperature sensor	x	x	x	x	x	x	x	x	x	√	x	x
Enthalpy outlet temperature sensor	x	x	x	x	x	x	x	x	x	x	√	x
Condenser temperature sensor	x	x	x	x	x	x	x	x	x	x	x	√
Reactor	√	x	x	x	x	x	x	x	x	x	x	x
IPM module board	√	x	x	x	x	x	x	x	x	x	x	x

Part requiring replacement	Error Code									
	ec 5c	eh c1	EC 07/EC 71	PC 00	PC 01/PC 10/PC 11/ PC 12	PC 02	PC 08/PC 44/ PC 46/ PC 49	PC 13	PC A1	PC 0F
Outdoor PCB	√	x	√	√	√	√	√	√	√	√
Outdoor fan motor	x	x	√	√	x	x	√	x	x	x
Reactor or inductance	x	x	x	√	√	x	√	x	x	√
Compressor	x	x	x	√	x	x	x	x	x	x
IPM module board	x	x	x	√	√	x	√	x	x	x
Bridge rectifier	x	x	x	√	√	x	√	x	x	x
Pressure sensor	√	x	x	x	x	x	x	x	x	x
PFC module	x	x	x	x	x	x	x	x	x	√
Additional refrigerant	x	√	x	x	x	x	x	x	x	x
Over load protector	x	x	x	x	x	√	x	x	x	x
ODU ambient temp. sensor	x	x	x	x	x	x	x	x	√	x
Refrigerant pipe temperature sensor	x	x	x	x	x	x	x	x	√	x

Quick Maintenance by Error Code (Cont)

Part requiring replacement	Error Code							
	PC 40	EC 72	PC 43	PC 45	Pc 06	Pc 0a	PC 30	pc 31
Outdoor PCB	√	√	√	x	√	√	√	√
Outdoor fan motor	x	√	x	x	x	√	√	√
ODU coil temp. sensor	x	x	x	x	x	√	x	x
COMP. discharge temp. sensor	x	x	x	x	√	x	x	x
Compressor	x	x	√	x	x	x	x	x
IPM module board	x	x	x	√	x	x	x	x
Additional refrigerant	x	x	x	x	√	√	x	√
Electric control box	√	x	x	x	x	x	x	x
High pressure switch	x	x	x	x	x	x	√	x
Low pressure switch	x	x	x	x	x	x	x	√

Manufacturer reserves the right to change, at any time, specifications and designs without notice and without obligations.

TROUBLESHOOTING BY ERROR CODE

EH 00/ EH 0A / EC 51 (EEPROM Malfunction Error Diagnosis and Solution)

Description: Indoor or outdoor PCB main chip does not receive feedback from EEPROM chip.

Recommended parts to prepare: Indoor PCB, Outdoor PCB

Troubleshooting and repair:

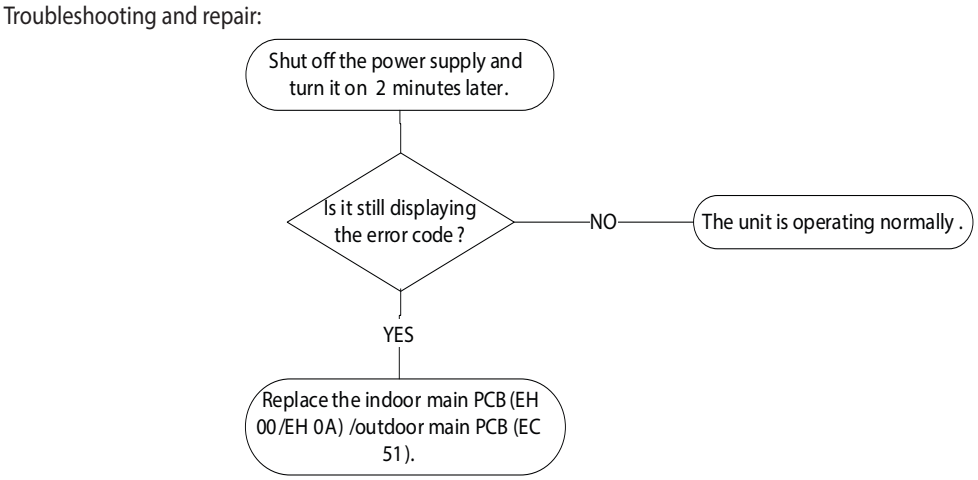

Fig. 39 —EC 51

Remarks:

EEPROM: A read-only memory whose contents can be erased and reprogrammed using a pulsed voltage.

The location of the EEPROM chip on the outdoor PCB is shown in the following image:

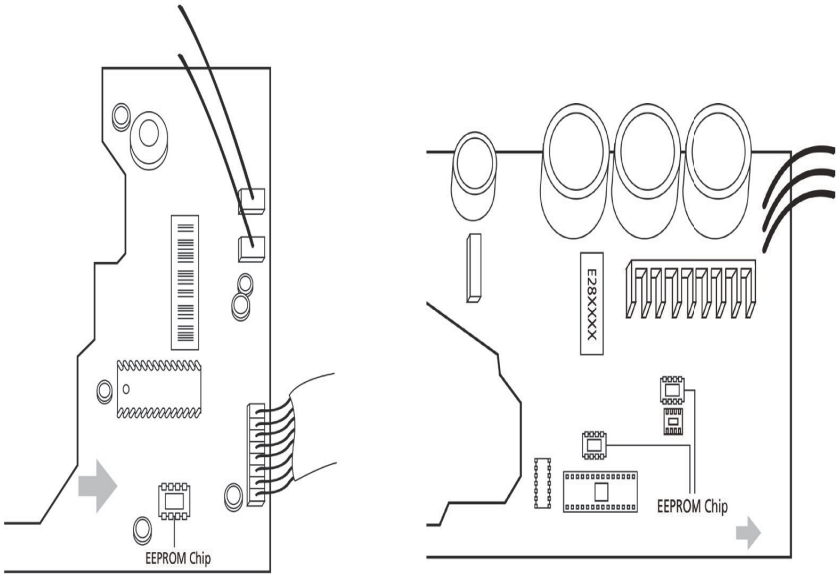

Fig. 40 —Location of EPROM Chip

NOTE: This picture is only for reference, actual appearance may vary.

IMPORTANT: Troubleshooting and repair of compressor driven chip EEPROM parameter error sand communication errors between outdoor main chip and compressor driven chip are same as EC 51.

EL 01 (Indoor and Outdoor Unit Communication Error Diagnosis and Solution)

Description: Indoor unit can not communicate with outdoor unit.

Recommended parts to prepare: Signal Wires, Magnetic Ring, Indoor PCB, Outdoor PCB

Troubleshooting for Current Loop Communication Loss
:

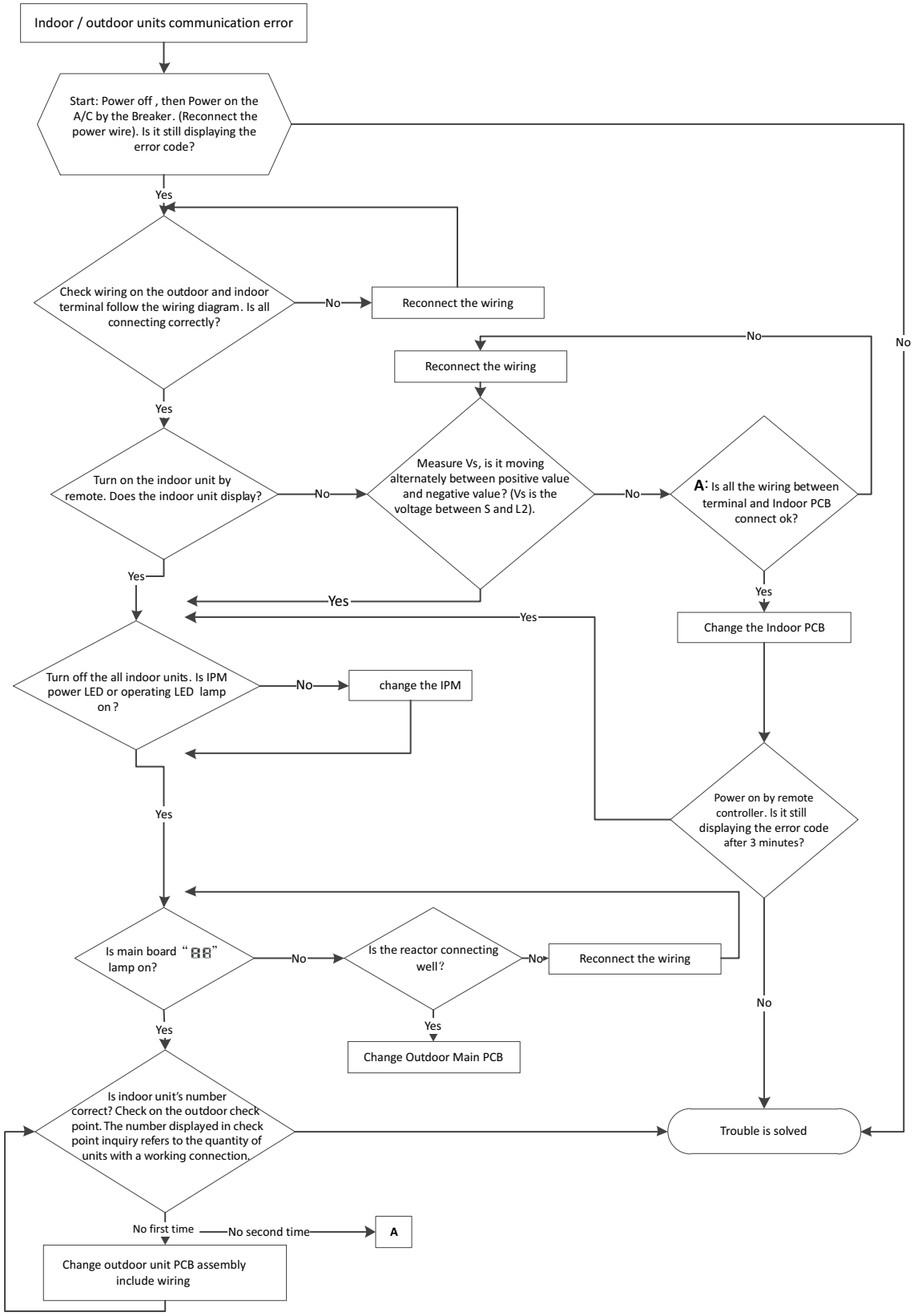

NOTE: Refer to the images on the next page.

Use a multimeter to test the DC voltage between 2 (old: L2) port and the outdoor unit's S port. The multimeter's red pin connects with 2 (old: L2) port while the black pin is for S port. When the unit is running normally, the voltage moves alternately between the positive and negative values.

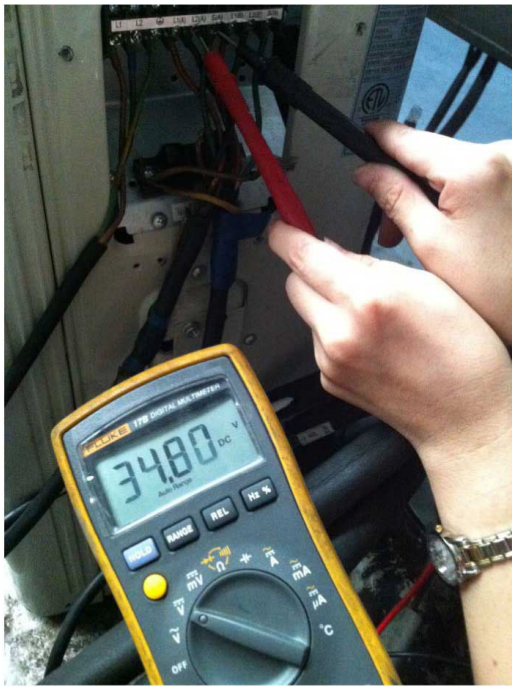

Fig. 41 —DC Voltage Check

Fig. 42 —Main Board LED with Power ON and Unit in Standby Mode

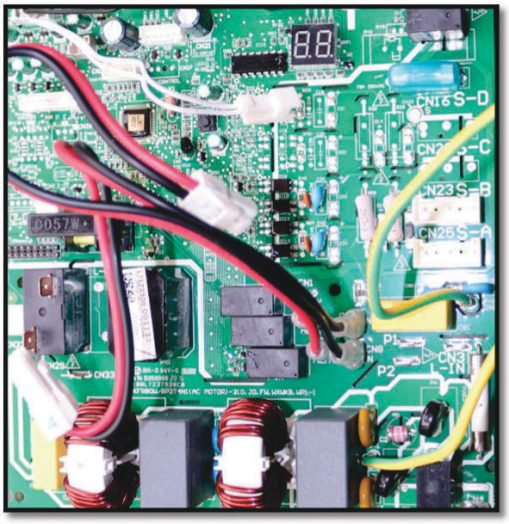

Fig. 43 —Checkpoint Button Location

(Press 1 time to check how many indoor units are connected)

EH03 / EC 07 / EC 71 (Fan Speed Is Operating Outside of Normal Range Diagnosis and Solution)

Description: When indoor / outdoor fan speed keeps too low or too high for a certain time, the LED displays the failure code and the AC turns off.

Recommended parts to prepare: Connection wires, Fan assembly, Fan motor, PCB

Troubleshooting and repair:

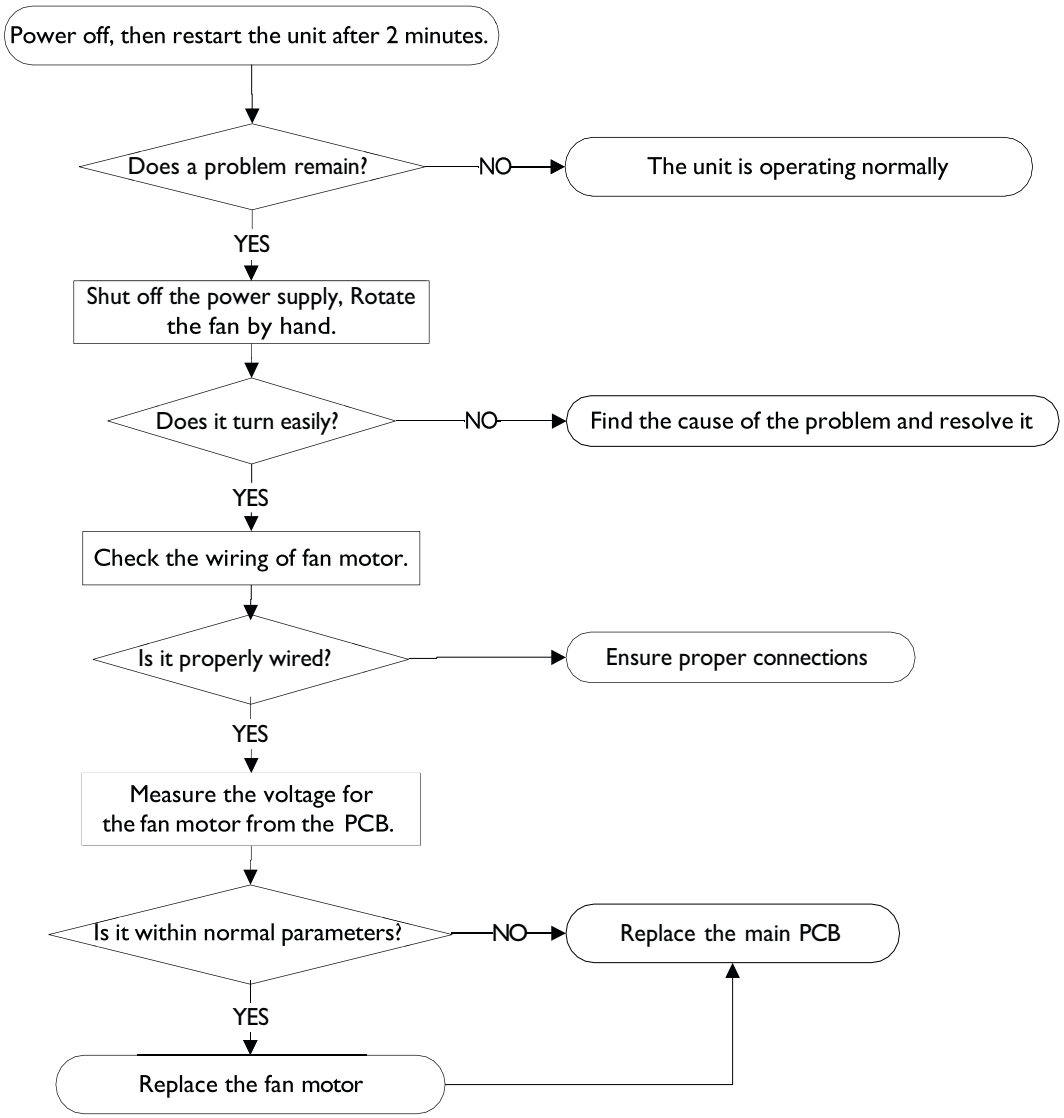

Index

1. Indoor or Outdoor DC Fan Motor (control chip is in fan motor)
   With the power on and when the unit is in standby, measure the voltage of pin1- pin3, pin4- pin3 in the fan motor connector. If the value of the voltage is not in the range shown in below table, the PCB needs to be replaced.

No.	Color	Signal	Voltage
1	Red	Vs/Vm	192V~380V
2	—	—	—
3	Black	GND	0V
4	White	Vcc	13.5-16.5V
5	Yellow	Vsp	0~6.5V
6	Blue	FG	13.5-16.5V

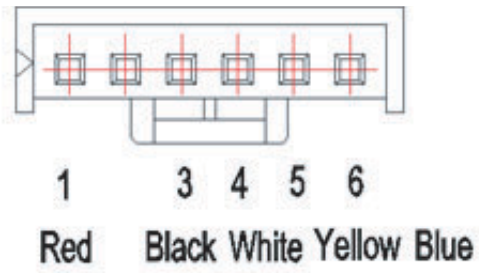

Fig. 44 —Fan Motor Connector, Pin Location

2. Outdoor DC Fan Motor (control chip is in outdoor PCB)
   Release the UVW connector. Measure the resistance of U-V, U-W, V-W. If the resistances are not equal to each other, the fan motor needs to be replaced. Otherwise, the PCB needs to be replaced.

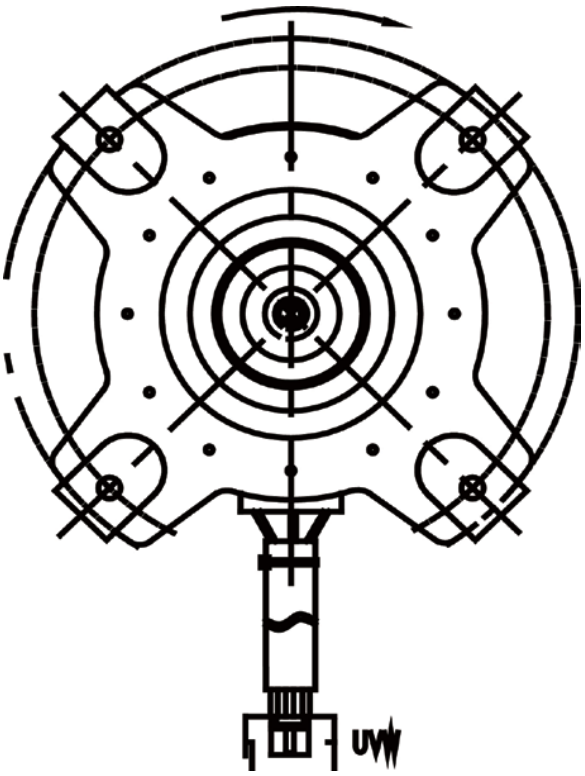

Fig. 45 —UVW Connector

EC 72 Lack phase failure of outdoor DC fan motor

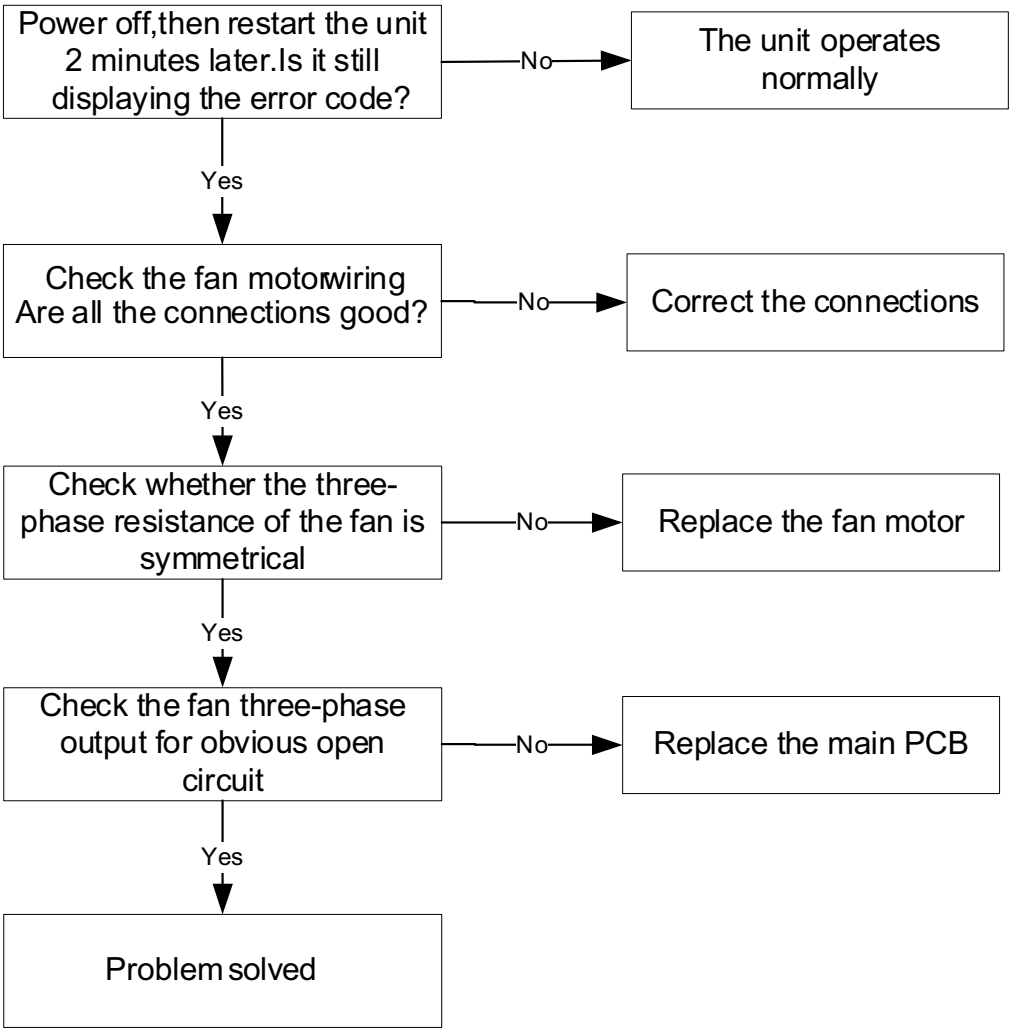

EC 5C Suction Transducer is in open circuit or has short circuited (for crossover units) diagnosis and solution

Description: If the sampling voltage is lower than 2V or higher than 254V, the LED displays the failure code.

Recommended parts to prepare:

- **Connection wires**
- **Sensor**
- **Outdoor PCB**

Troubleshooting and repair:

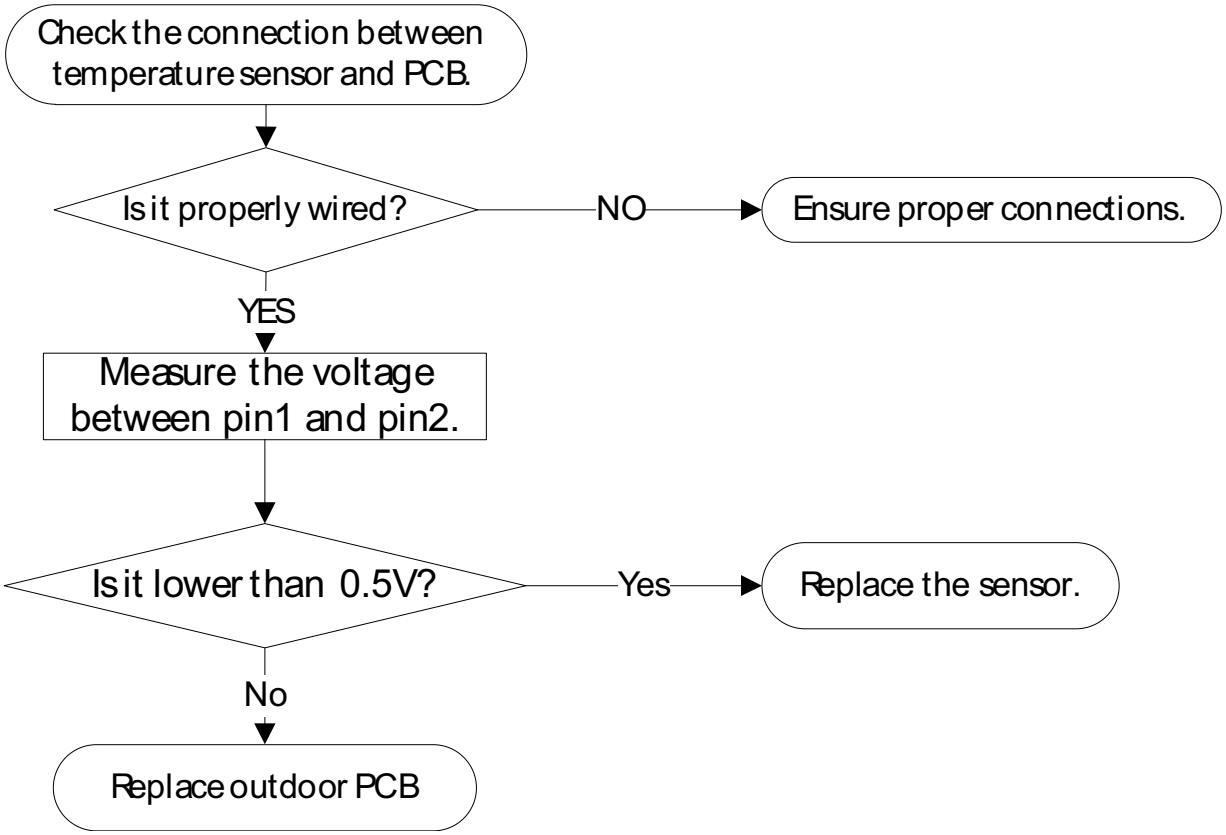

EC 53/ EC 52/ EC 54/ EC 56/ EC 57/ EC 50/ EC 5A/ EC 5B/ EC 5E (Open Circuit or Short Circuit of Temperature Sensor Diagnosis and Solution)

Description: If the sampling voltage is lower than 0.06V or higher than 4.94V, the LED displays the failure.

Recommended parts to prepare: Connection wires, Sensors, PCB

Troubleshooting and repair:

Refer to Appendix, page 101.

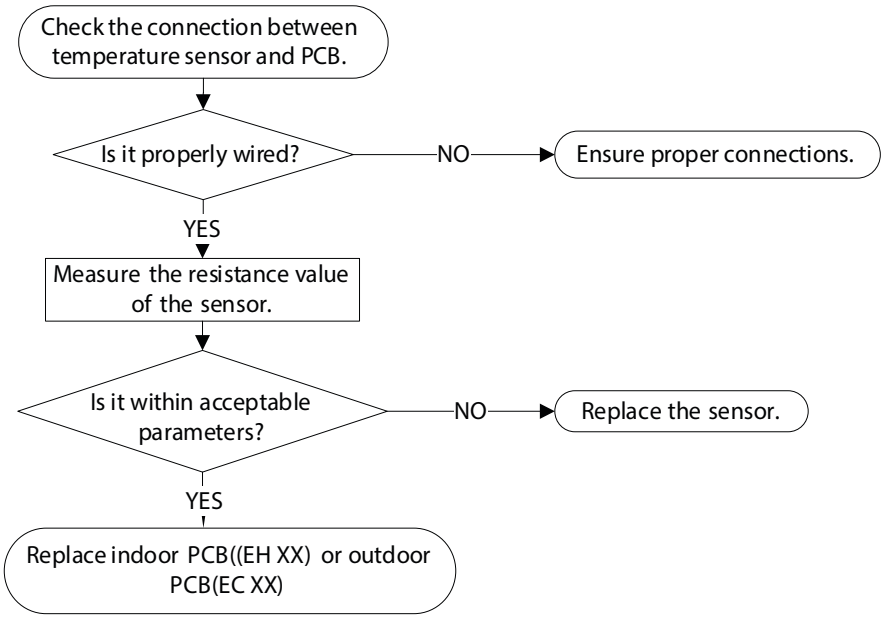

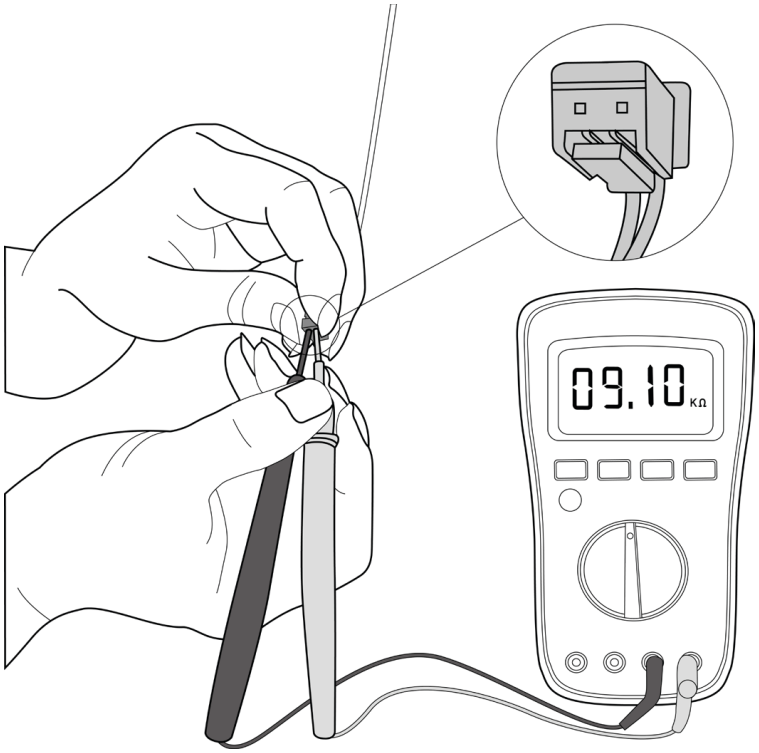

NOTE: This picture and the value are only for reference, actual appearance and value may vary.

EC 55 (ODU IPM module temperature sensor malfunction diagnosis and solution)

Description: If the sampling voltage is 0V or 5V, the LED displays the failure code.

Recommended parts to prepare:

- **IPM module PCB**
- **Connection wires**
- **Sensors**
- **Outdoor main PCB**

Troubleshooting and repair: If the radiator has no sensor, follow the steps below to resolve:

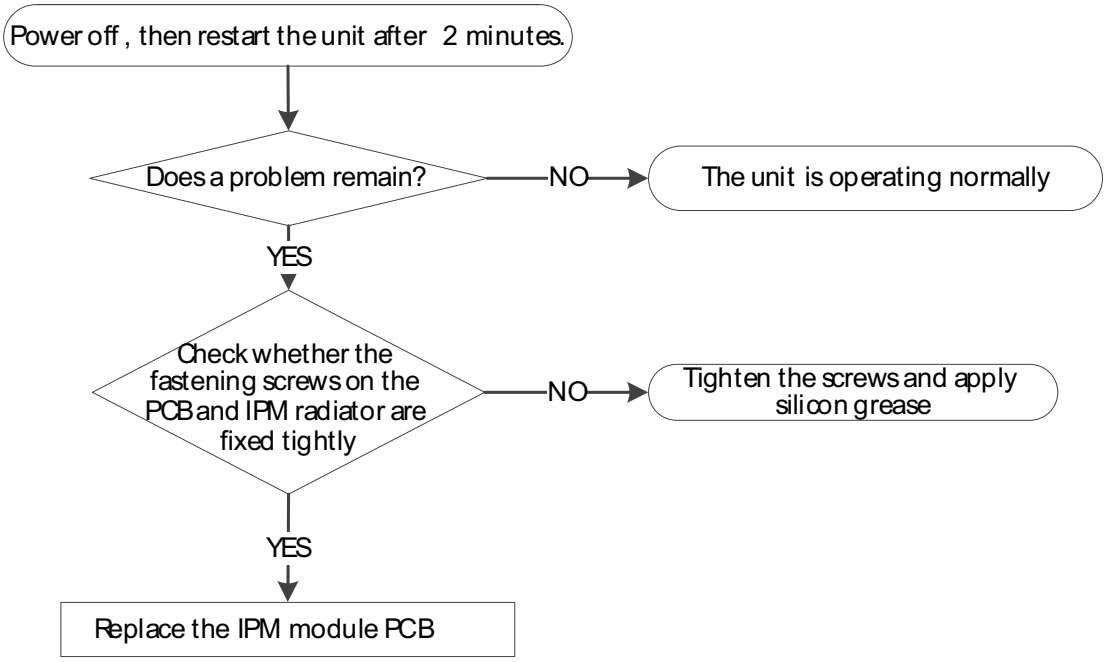

If the radiator has a sensor(TH), follow the steps below:

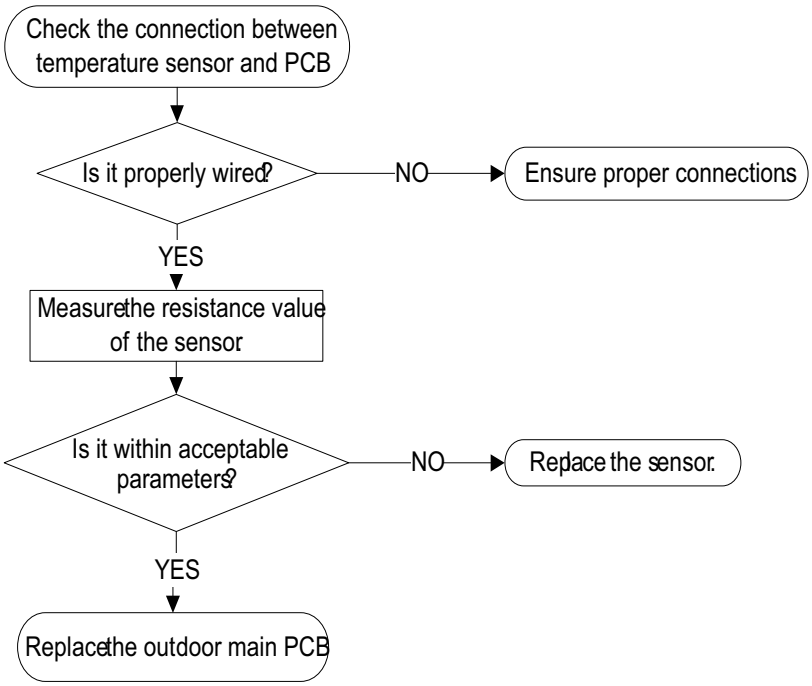

EL 0C (System Lacks Refrigerant Diagnosis and Solution)

Description: Judging the abnormality of the refrigeration system according to the number of compressor stops and the changes in operating parameters caused by excessive exhaust temperature.

Recommended parts to prepare: Indoor PCB, Additional refrigerant

Troubleshooting and repair:

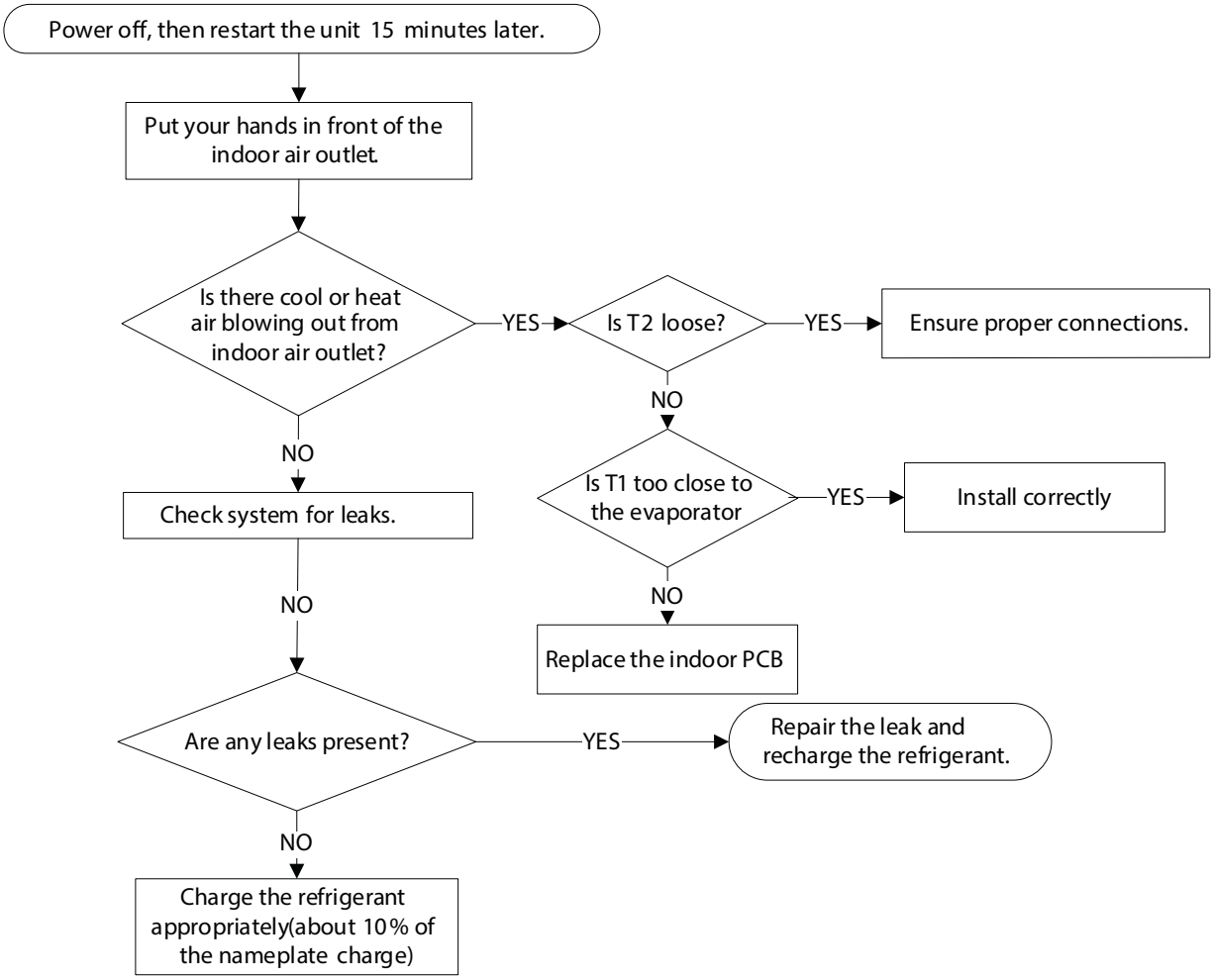

EH 0E (Water-Level Alarm Malfunction Diagnosis and Solution)

Description: If the sampling voltage is not 5V, the LED displays the failure code.

Recommended parts to prepare: Connection wires, Water-level switch, Water pump, Indoor PCB

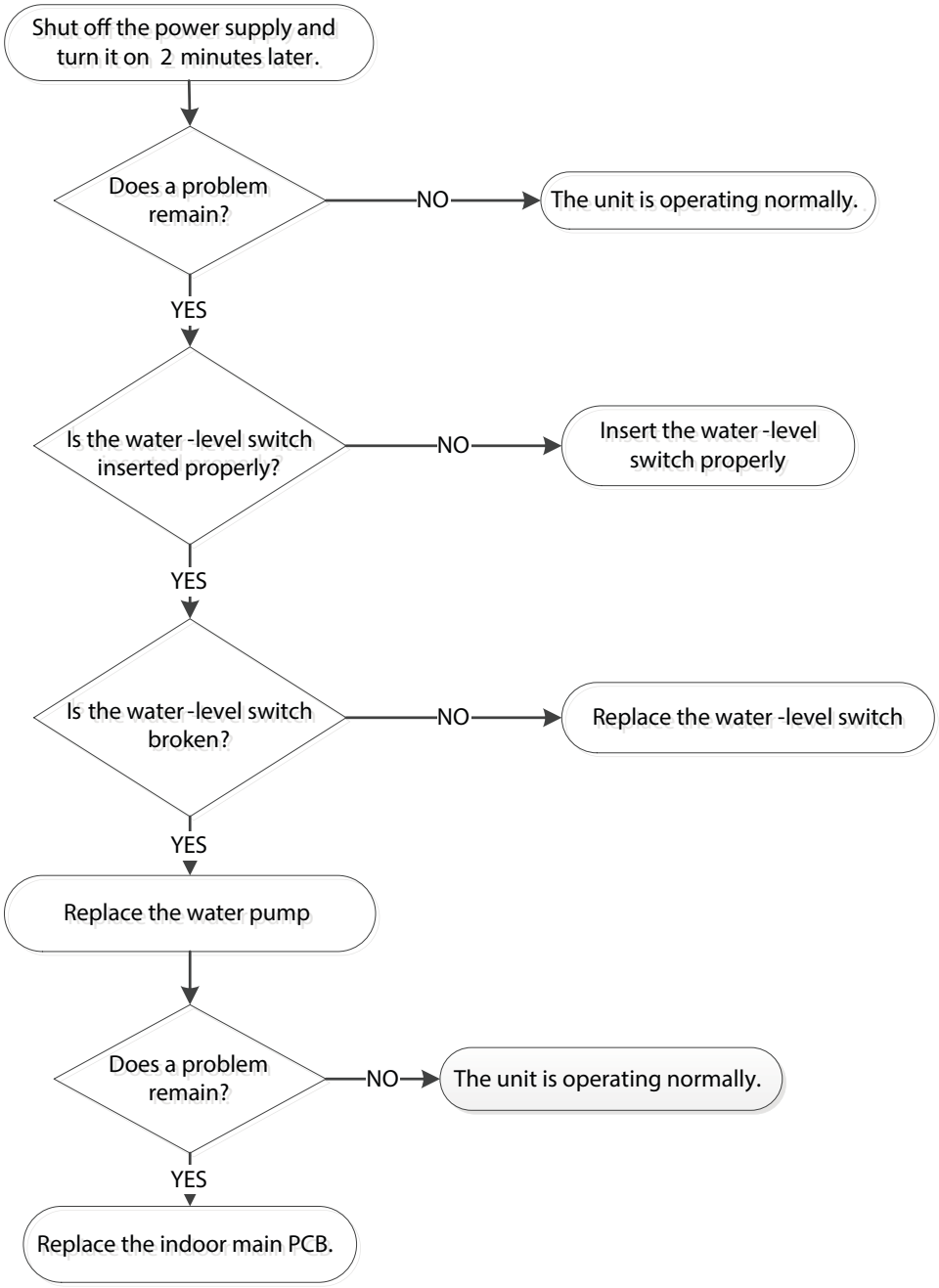

PC 00 (ODU IPM Module Protection Diagnosis and Solution)

Description: When the voltage signal the IPM sends to the compressor drive chip is abnormal, the display LED shows "PC 00" and the AC turn off.

Recommended parts to prepare: Connection wires, IPM module board, Outdoor fan assembly, Compressor, Outdoor PCB

Troubleshooting and repair:

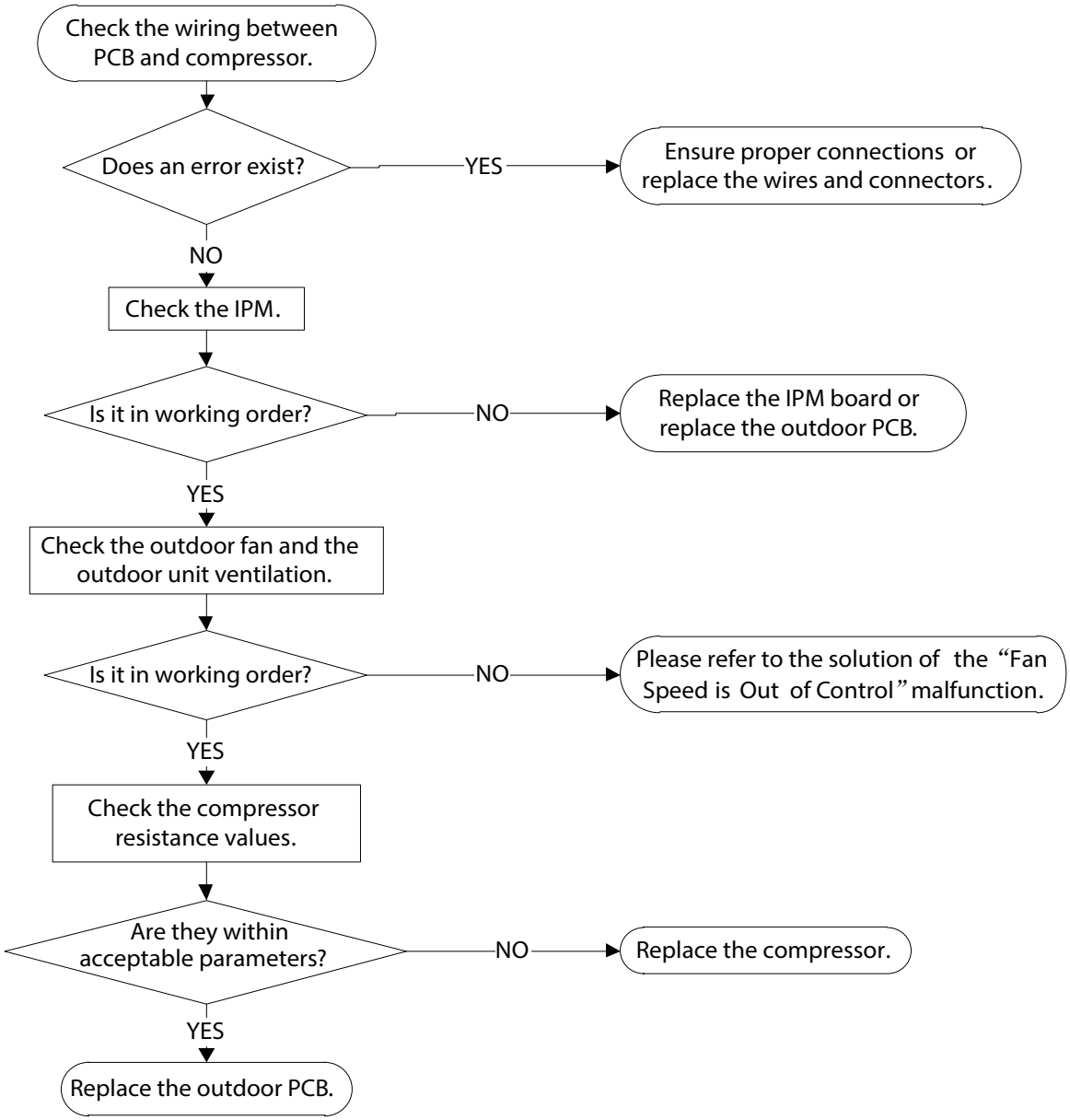

NOTE: For certain models, the outdoor PCB can not be removed separately. In this case, the outdoor electric control box should be replaced as a whole.

PC 01 (ODU Voltage Protection Diagnosis and Solution)

PC 01 (Over voltage or too low voltage protection) / PC 10 (Outdoor unit low AC voltage protection) / PC 11 (Outdoor unit main control board DC bus high voltage protection) / PC 12 (Outdoor unit main control board DC bus high voltage protection/341 MCE error) Diagnosis and Solution)

Description: Abnormal increases or decreases in voltage are detected by checking the specified voltage detection circuit.

Recommended parts to prepare: Power supply wires, IPM module board, PCB, Reactor

Troubleshooting and repair:

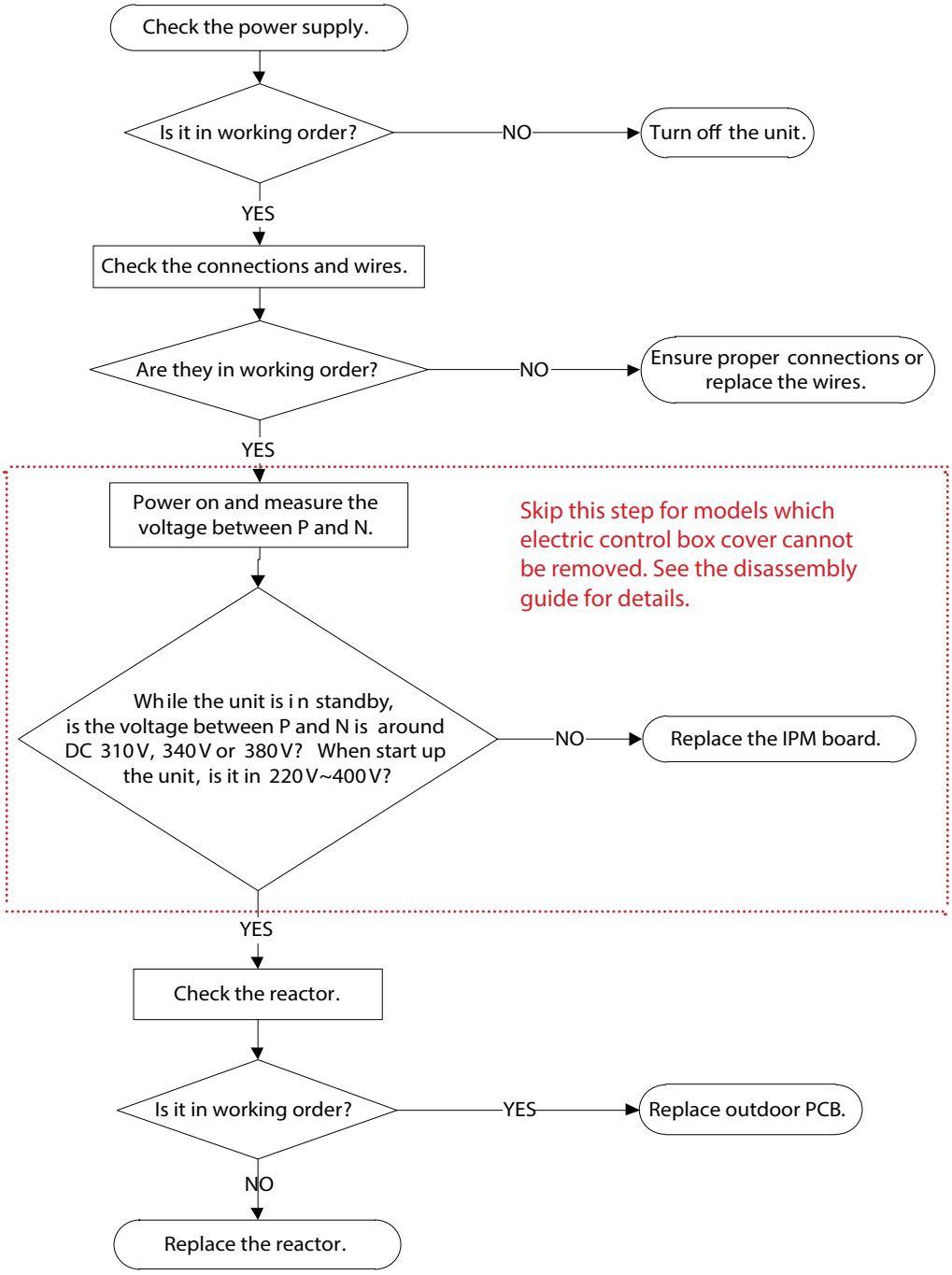

NOTE: For certain models, the outdoor PCB cannot be removed separately. In this case, the outdoor electric control box should be replaced as a whole.

PC 13(The AC power is cut off or the AC voltage detection circuit fails diagnosis and solution)

Description: The machine equipped with a safety shut-off valve has detected a power outage from the mains.

Recommended parts to prepare:

• Outdoor PCB

Troubleshooting and repair:

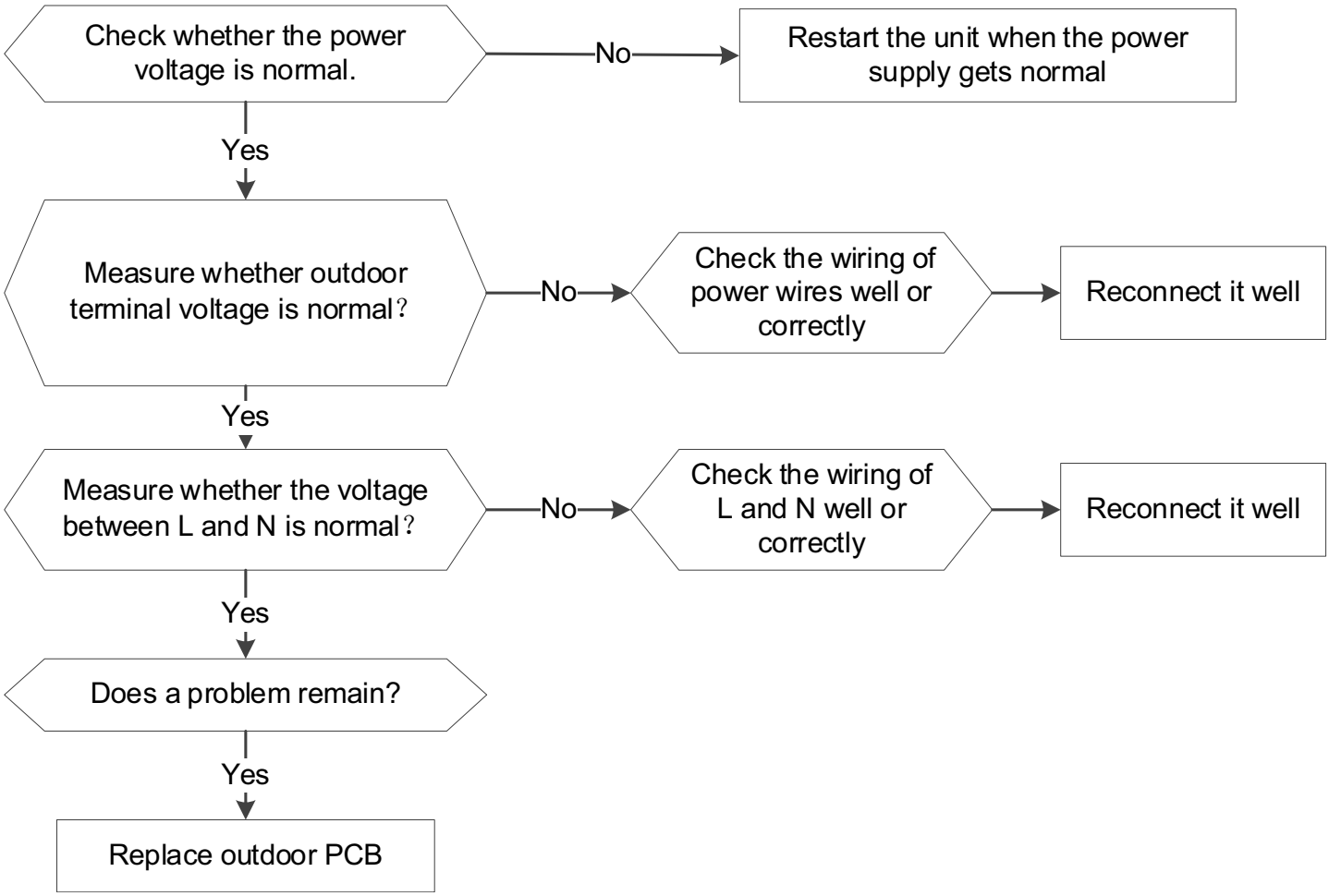

PC A1 (Condensation protection of refrigerant pipe diagnosis and solution)

Description: If outdoor ambient temperature is higher than a certain set value of the refrigerant pipe temperature for a period of time, the LED displays the failure code.

Recommended parts to prepare:

- **T4 sensor**
- **T5 sensor**
- **Main EXV**
- **Outdoor PCB**

Troubleshooting and repair:

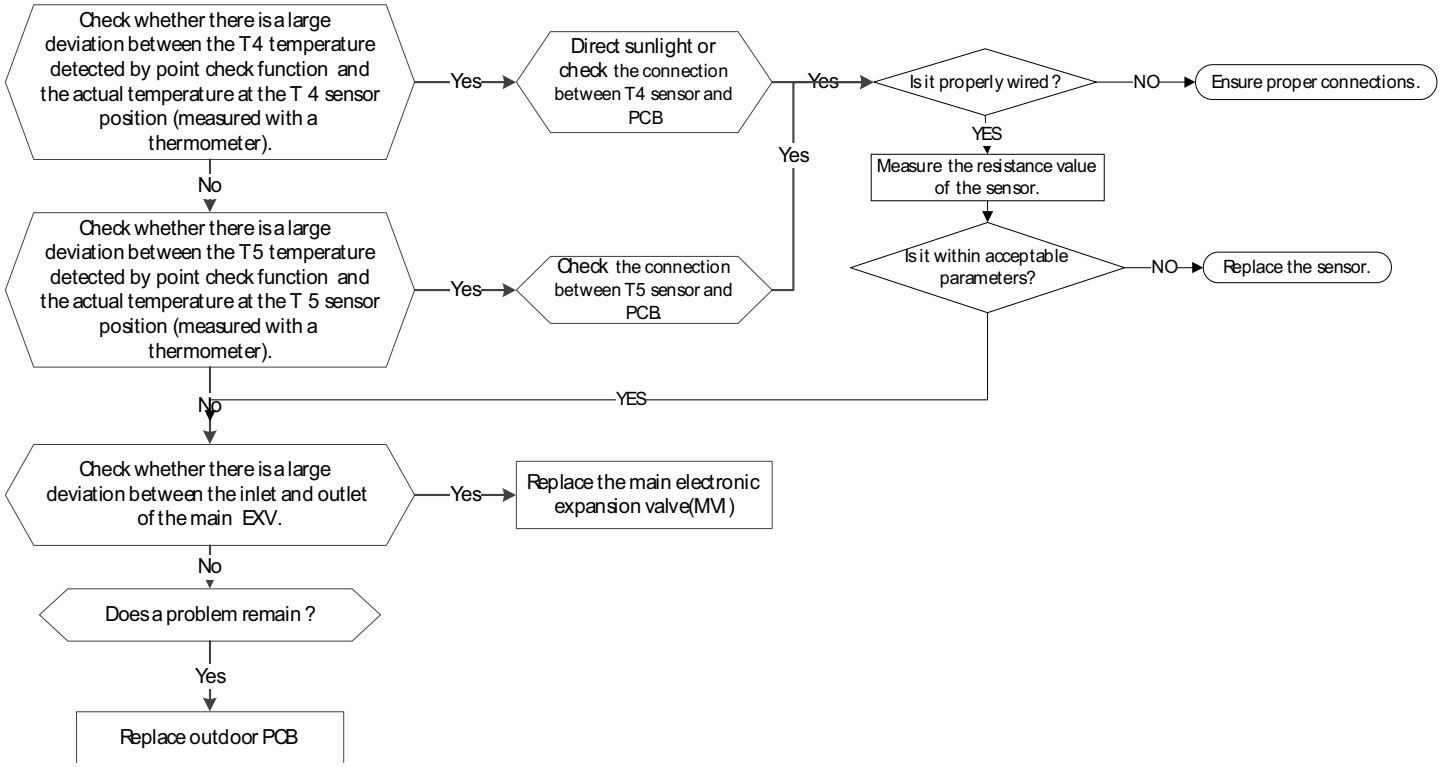

PC 02 / LC 06 Compressor Top (or IPM) Temp. Protection Diagnosis and Solution

Description: **For some models with overload protection, If the sampling voltage is not 5V, the LED will display the failure. If the temperature of IPM module is higher than a certain value, the LED displays the failure code.**

Recommended parts to prepare: Connection wires, Outdoor PCB, IPM module board, High pressure protector, System blockages

Troubleshooting and repair:

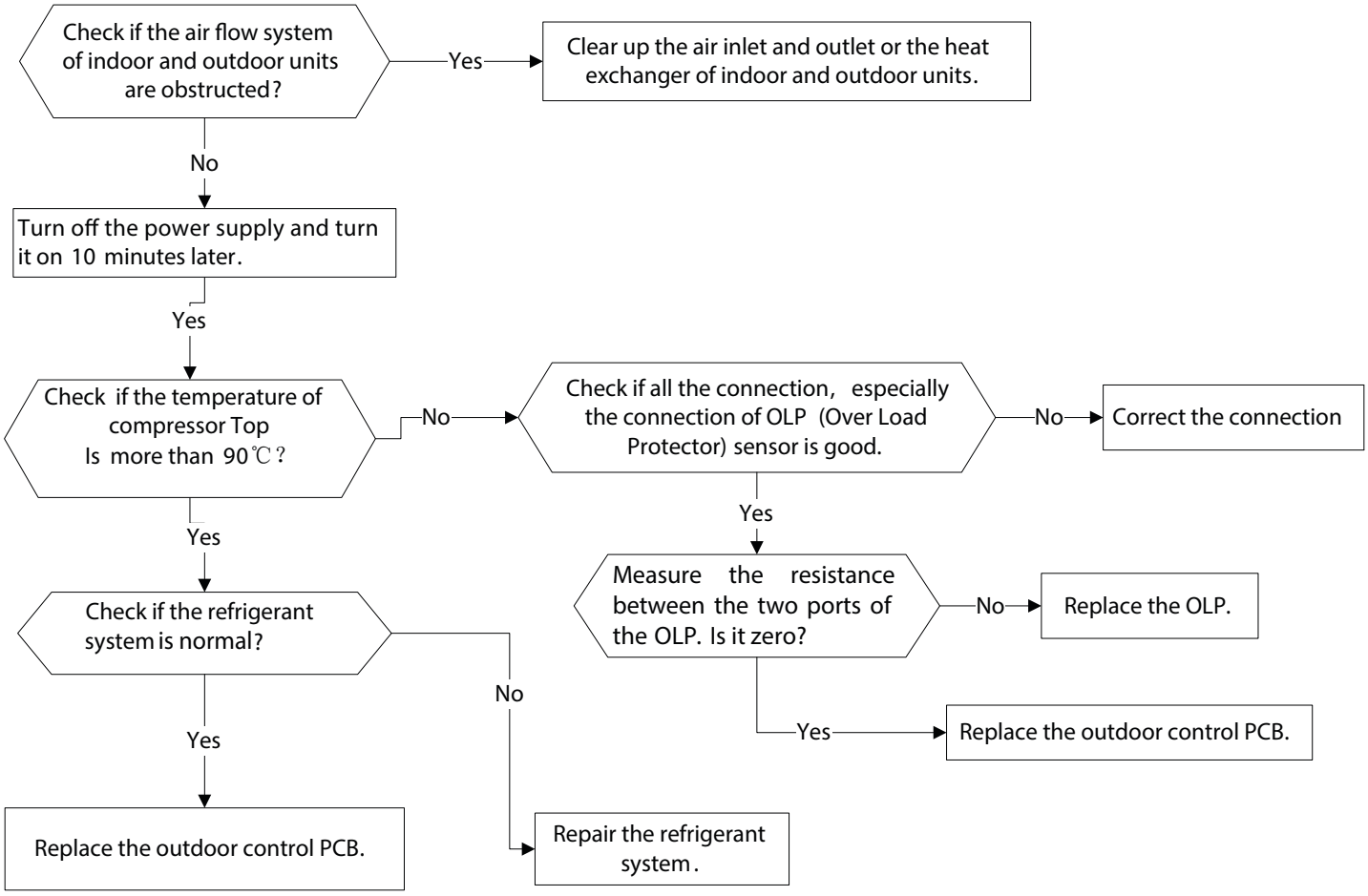

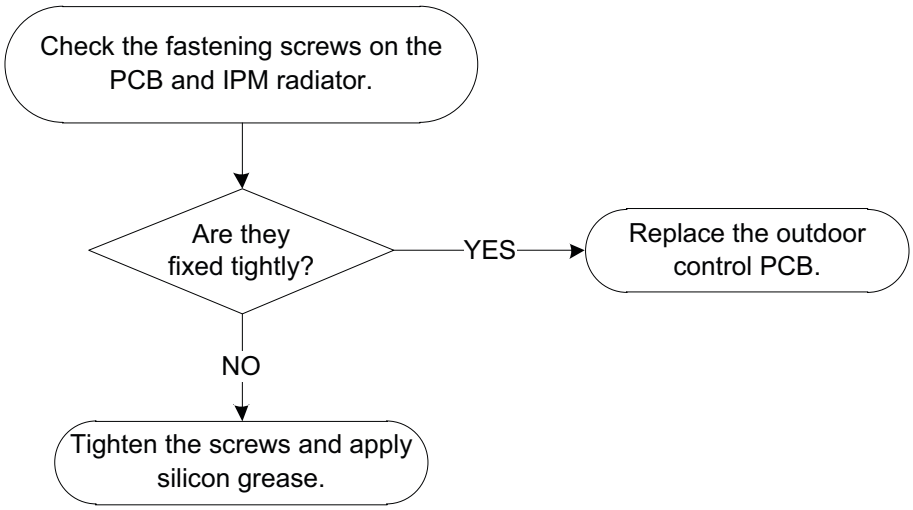

PC 03 Pressure Protection (low or high pressure), PC 30 High Pressure Protection, PC 31 Low Pressure Protection (Diagnosis and Solution)

Description: Outdoor pressure switch cut off the system because high pressure is higher than 4.4 MPa or outdoor pressure switch cut off the system because low pressure is lower than 0.13 MPa, the LED displays the failure code.

Recommended parts to prepare: Connection wires, Pressure switch, Outdoor fan, Outdoor main PCB, Refrigerant

Troubleshooting and repair:

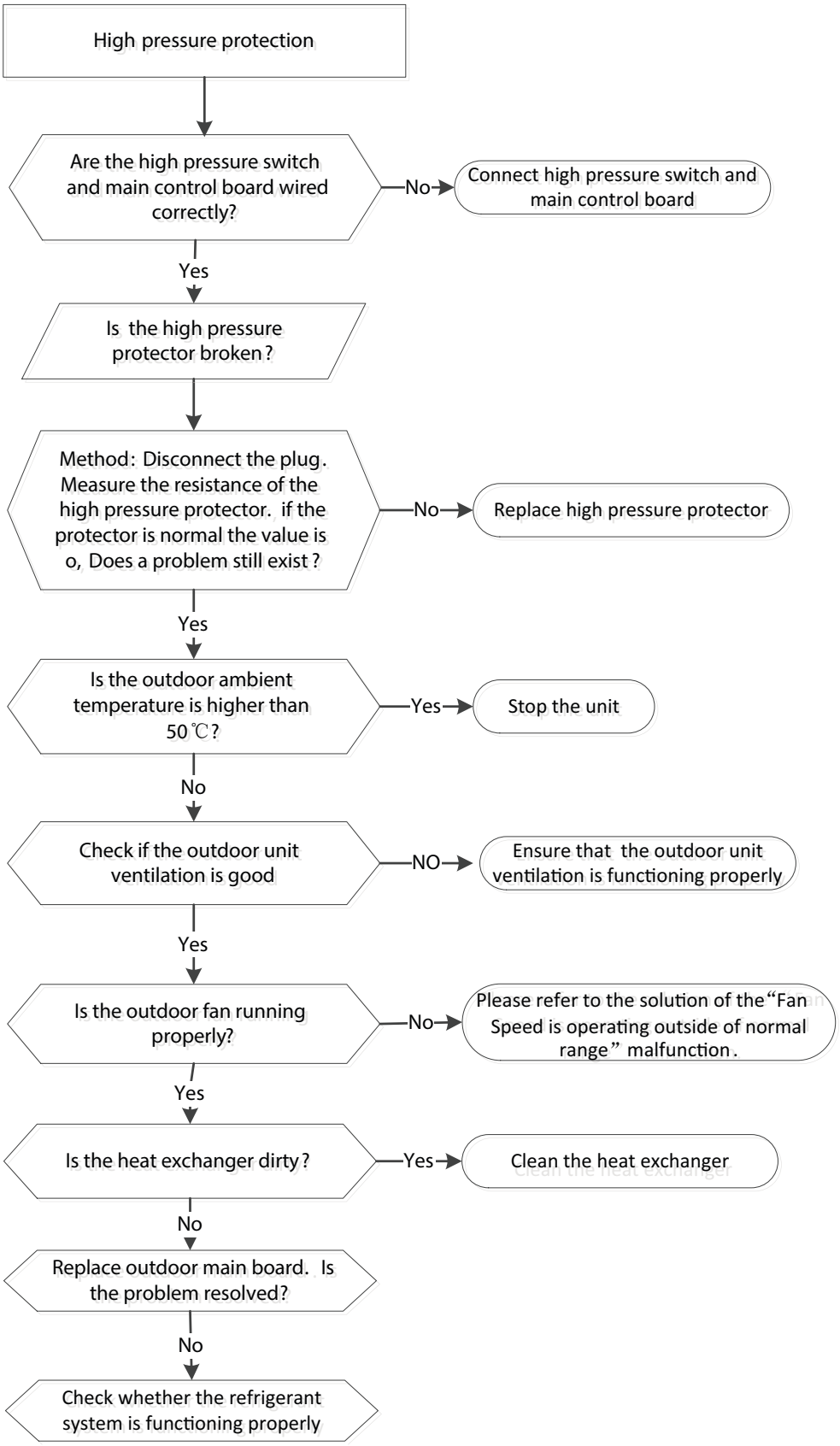

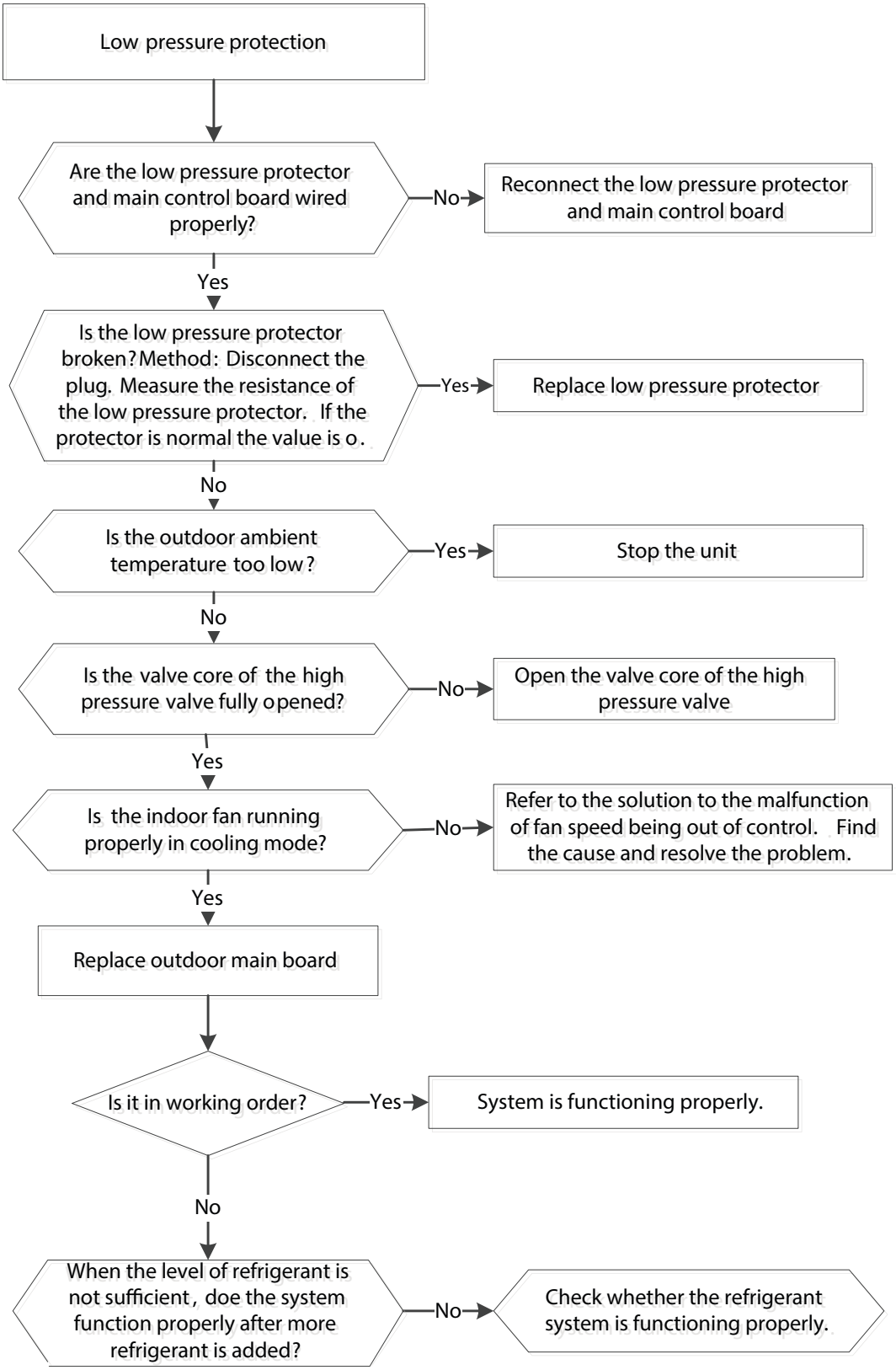
Low pressure protection
Are the low pressure protector and main control board wired properly?
No
Reconnect the low pressure protector and main control board
Yes
Is the low pressure protector broken? Method: Disconnect the plug. Measure the resistance of the low pressure protector. If the protector is normal the value is o.
Yes
Replace low pressure protector
No
Is the outdoor ambient temperature too low?
Yes
Stop the unit
No
Is the valve core of the high pressure valve fully opened?
No
Open the valve core of the high pressure valve
Yes
Is the indoor fan running properly in cooling mode?
No
Refer to the solution to the malfunction of fan speed being out of control. Find the cause and resolve the problem.
Yes
Replace outdoor main board
Is it in working order?
Yes
System is functioning properly.
No
When the level of refrigerant is not sufficient, doe the system function properly after more refrigerant is added?
No
Check whether the refrigerant system is functioning properly.

PC 04 (Inverter Compressor Drive Error Diagnosis and Solution)

Description: An abnormal inverter compressor drive is detected by a special detection circuit, including communication signal detection, voltage detection, compressor rotation speed signal detection and so on.

Recommended parts to prepare: Connection wires, IPM module board, Outdoor fan assembly, Compressor, Outdoor PCB

Troubleshooting and repair:

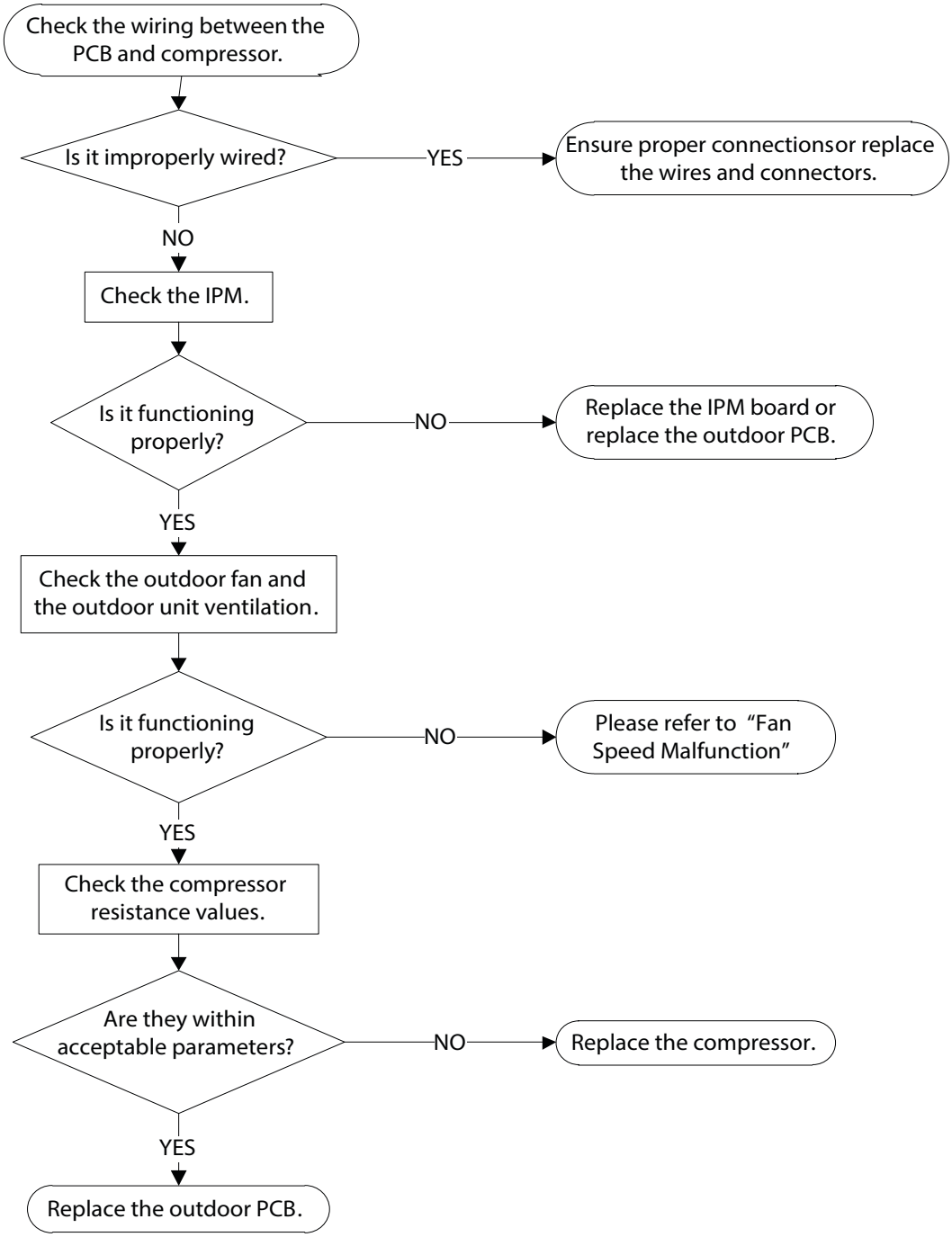

PC 40 (Communication error between ODU main chip and compressor driven chip diagnosis and solution)

Description: The main PCB cannot detect the IPM board.

Recommended parts to prepare: Connection wires, Outdoor PCB, IPM module board, Electric control box

Troubleshooting and repair:

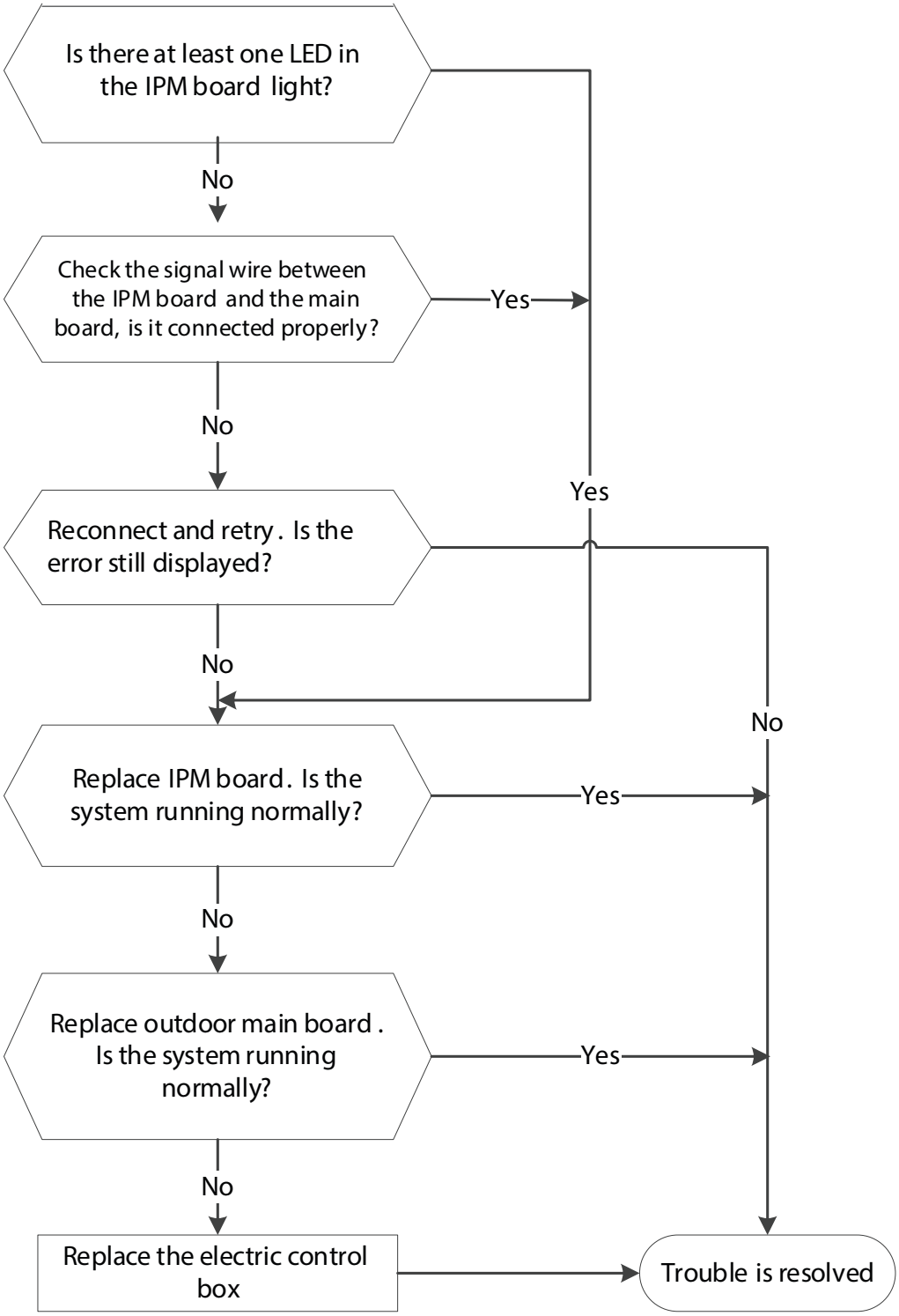

PC 41 (Outdoor compressor current sampling circuit failure diagnosis and solution)

Description: Three-phase sampling offset voltage error, the static bias voltage is normally 2.5V.

Recommended parts to prepare: Outdoor main PCB

Troubleshooting and repair:

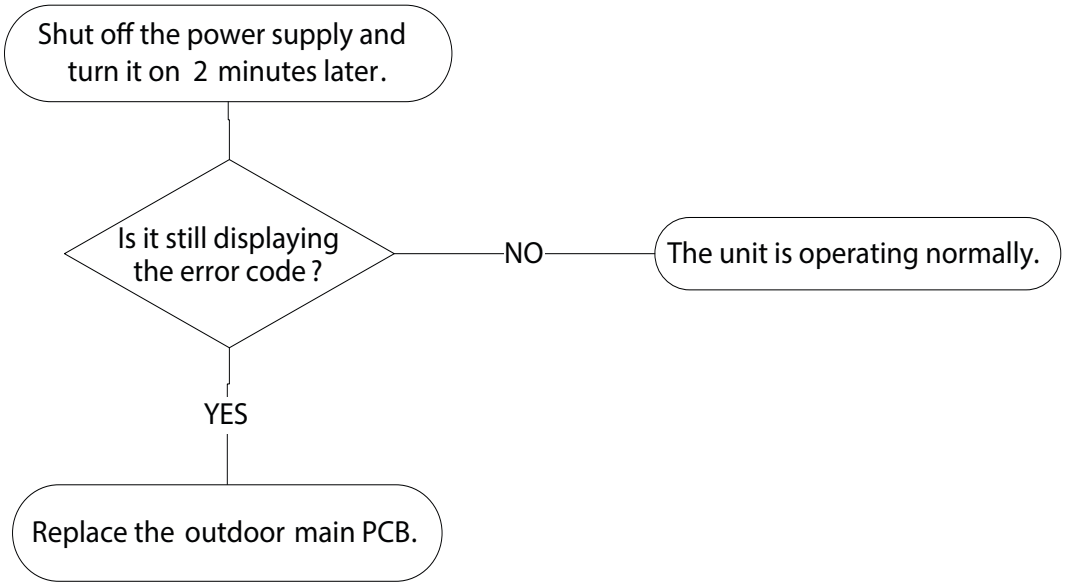

PC 43 (ODU compressor lack phase protection diagnosis and solution)

Description: When the three-phase sampling current of the compressor is abnormal, especially when the current of one or more phases is always small and almost 0, the LED displays the failure code.

Recommended parts to prepare: Connection wire, Compressor, Outdoor PCB

Troubleshooting and repair:

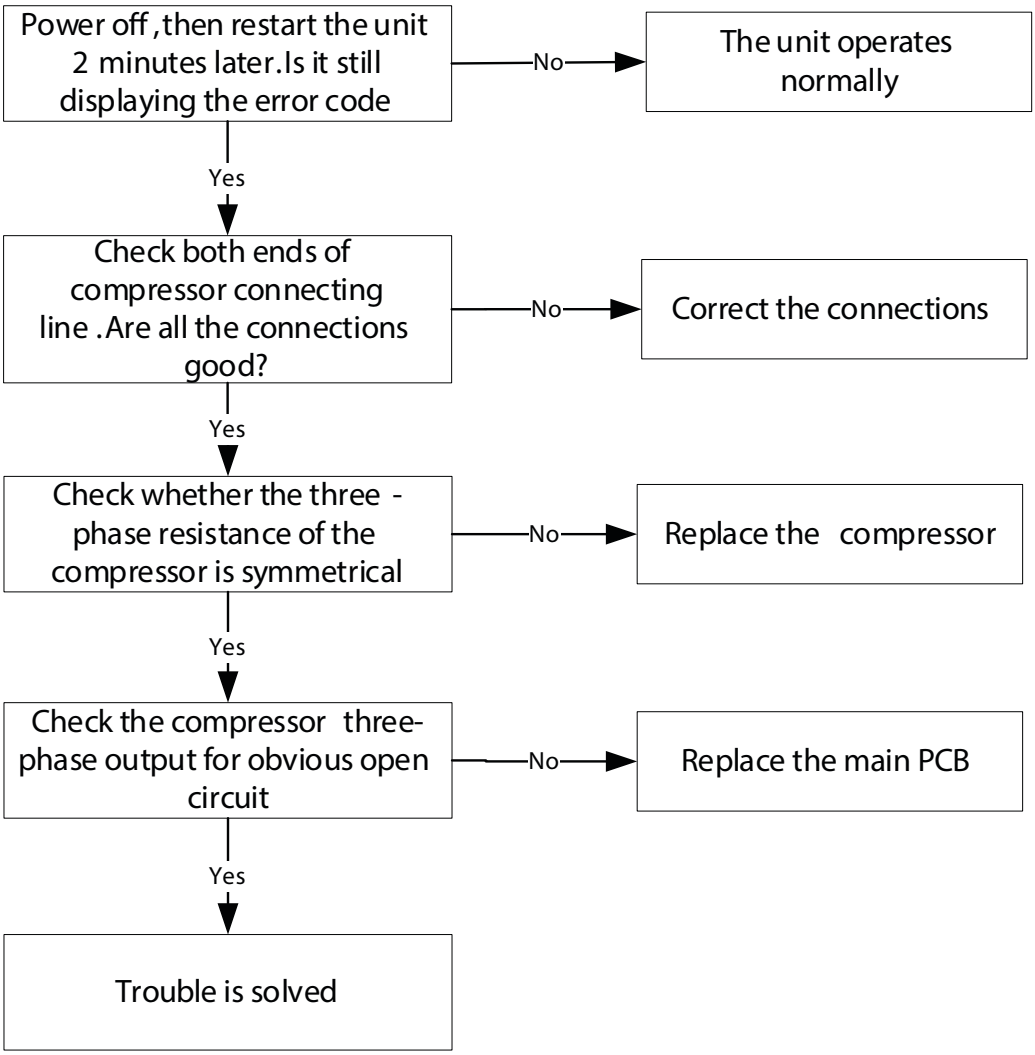

PC 45 (ODU IR chip drive failure diagnosis and solution)

Description: When the IR chip detects its own parameter error, the LED displays the failure code when power on.

Recommended parts to prepare: Inverter module PCB.

Troubleshooting and repair:

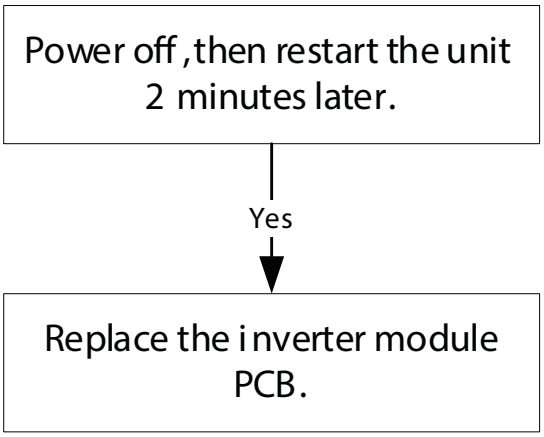

PC 06 (Discharge temperature protection of compressor diagnosis and solution)

Description: When the compressor discharge temperature (TP) is more than 115°C for 10 seconds, the compressor ceases operation and does not restart until TP is less than 90°C

Recommended parts to prepare: Connection wires, Outdoor PCB, Discharge temperature sensor, Refrigerant

Troubleshooting and repair:

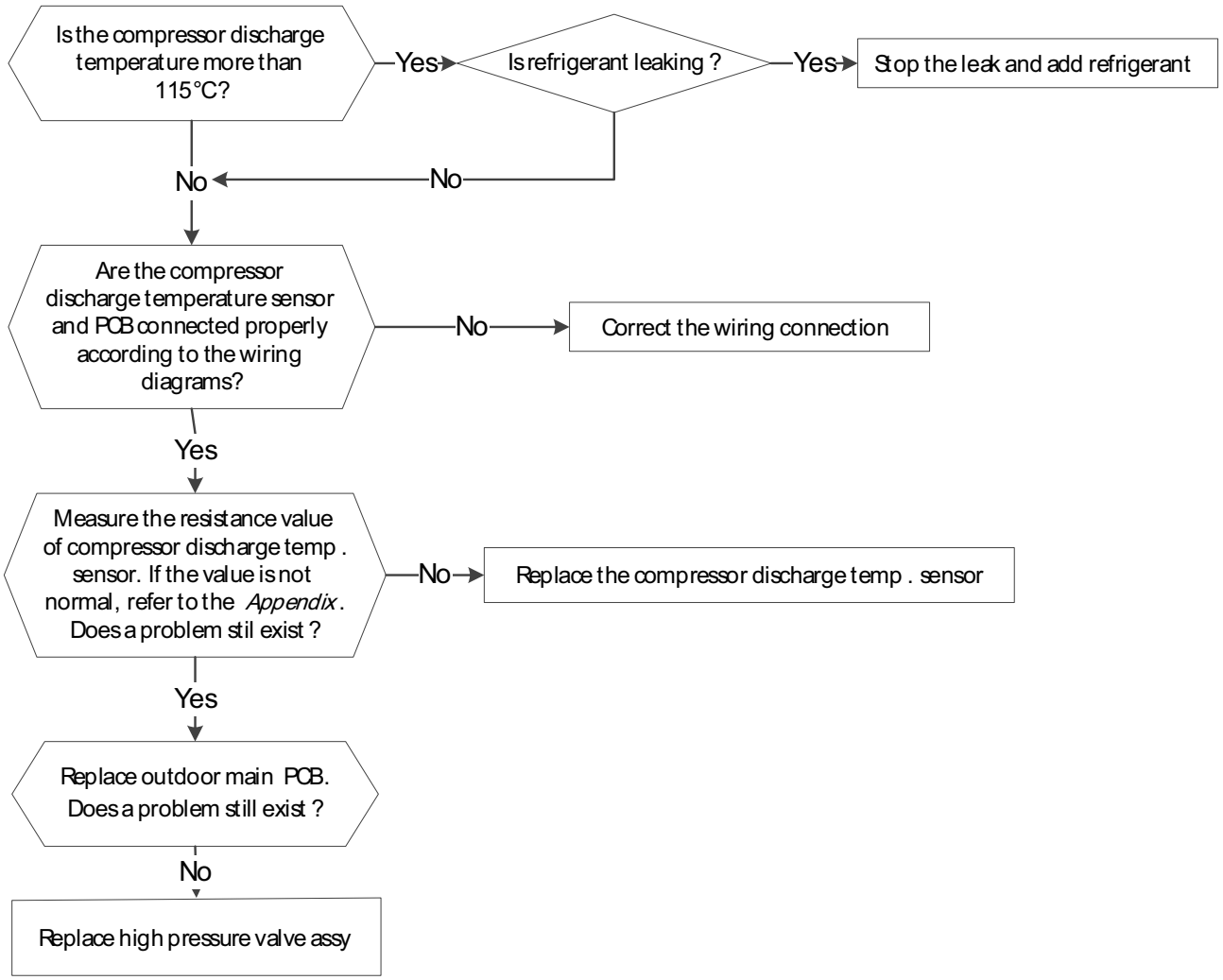

PC 08 (Current overload protection)/ PC 42 (Compressor start failure of outdoor unit)/ PC 44 (ODU zero speed protection) / PC 46 (Compressor speed has been out of control)/ PC 49 (Compressor overcurrent failure)

Description: An abnormal current rise is detected by checking the specified current detection circuit.

Recommended parts to prepare: Outdoor PCB, Connection wires, Bridge rectifier, PFC circuit or reactor, Refrigeration piping system, Pressure switch, Outdoor fan, PM module board

Troubleshooting and repair:

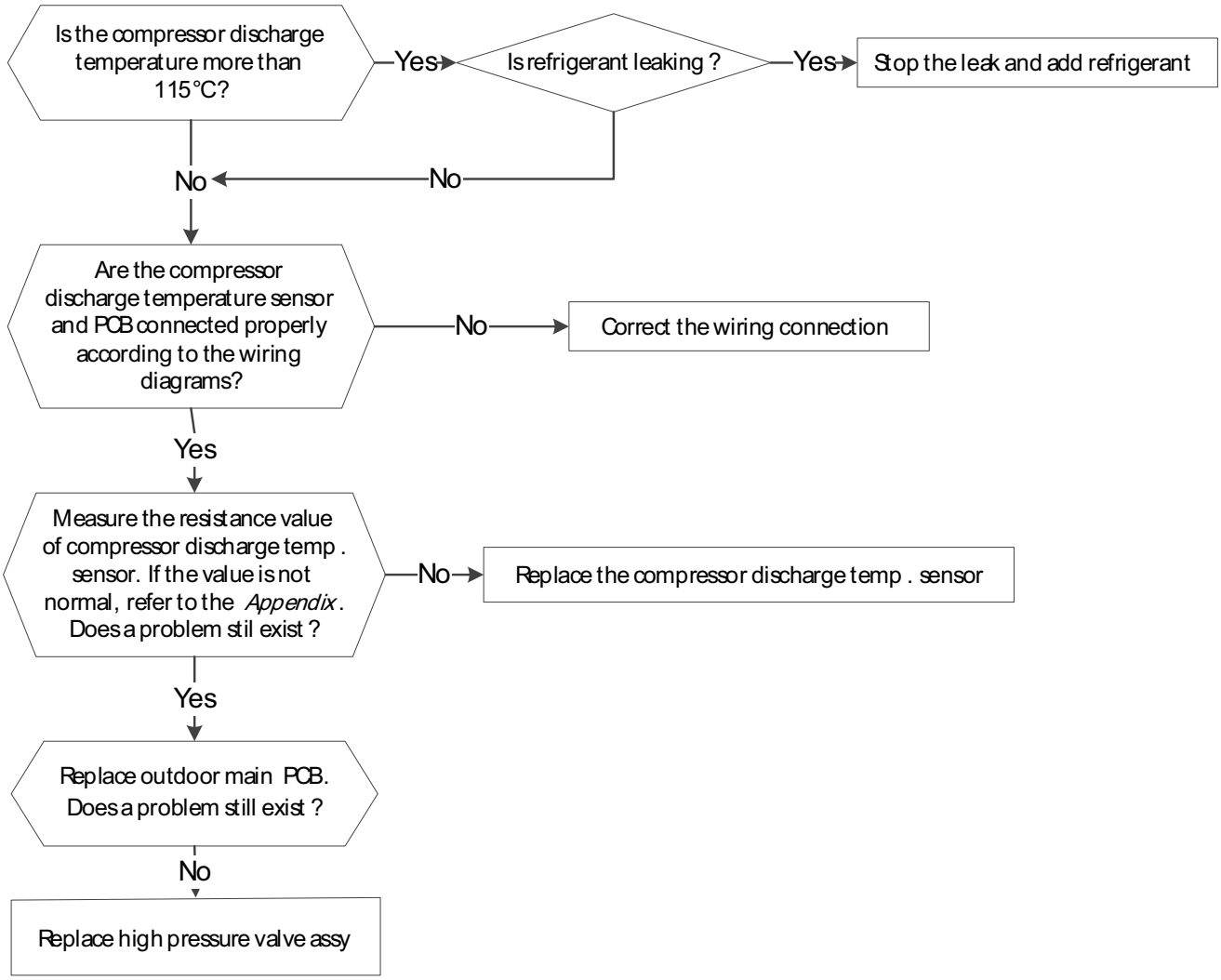

PC 0A (High temperature protection of condenser diagnosis and solution)

Description: The unit will stop when condenser temperature is higher than 65°C, and runs again when it is less than 52°C

Recommended parts to prepare: Connection wires, Condenser temperature sensor, Outdoor fan, Outdoor main PCB, Refrigerant

Troubleshooting and repair:

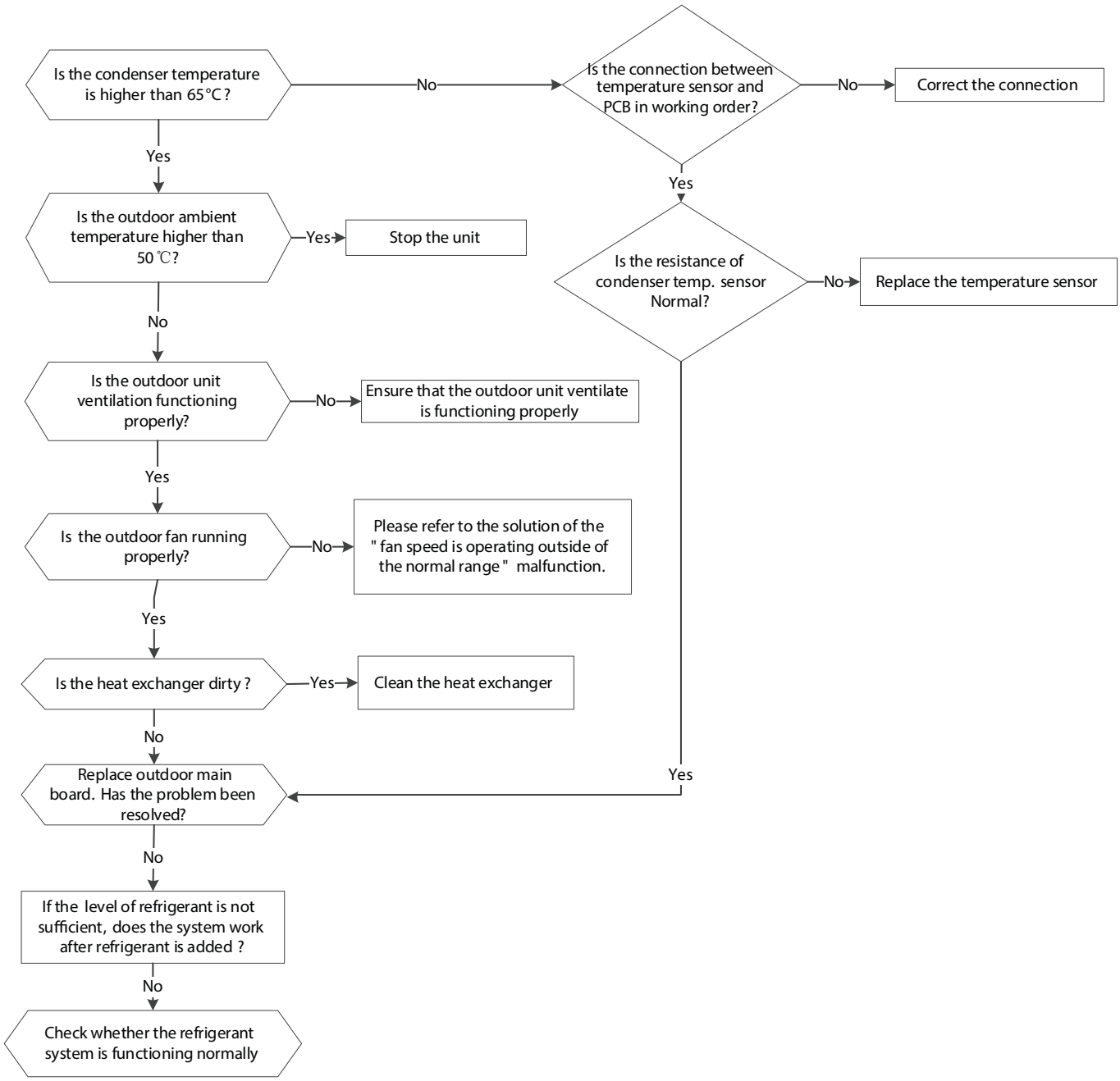

PC 0F (PFC module protection diagnosis and solution)

Description: Outdoor PCB detects PFC signal is low voltage or DC voltage is lower than 340V for 6s when quick check.

Recommended parts to prepare: Connection wires Outdoor PCB, Inductance, PFC circuit or IPM module board

Troubleshooting and repair:

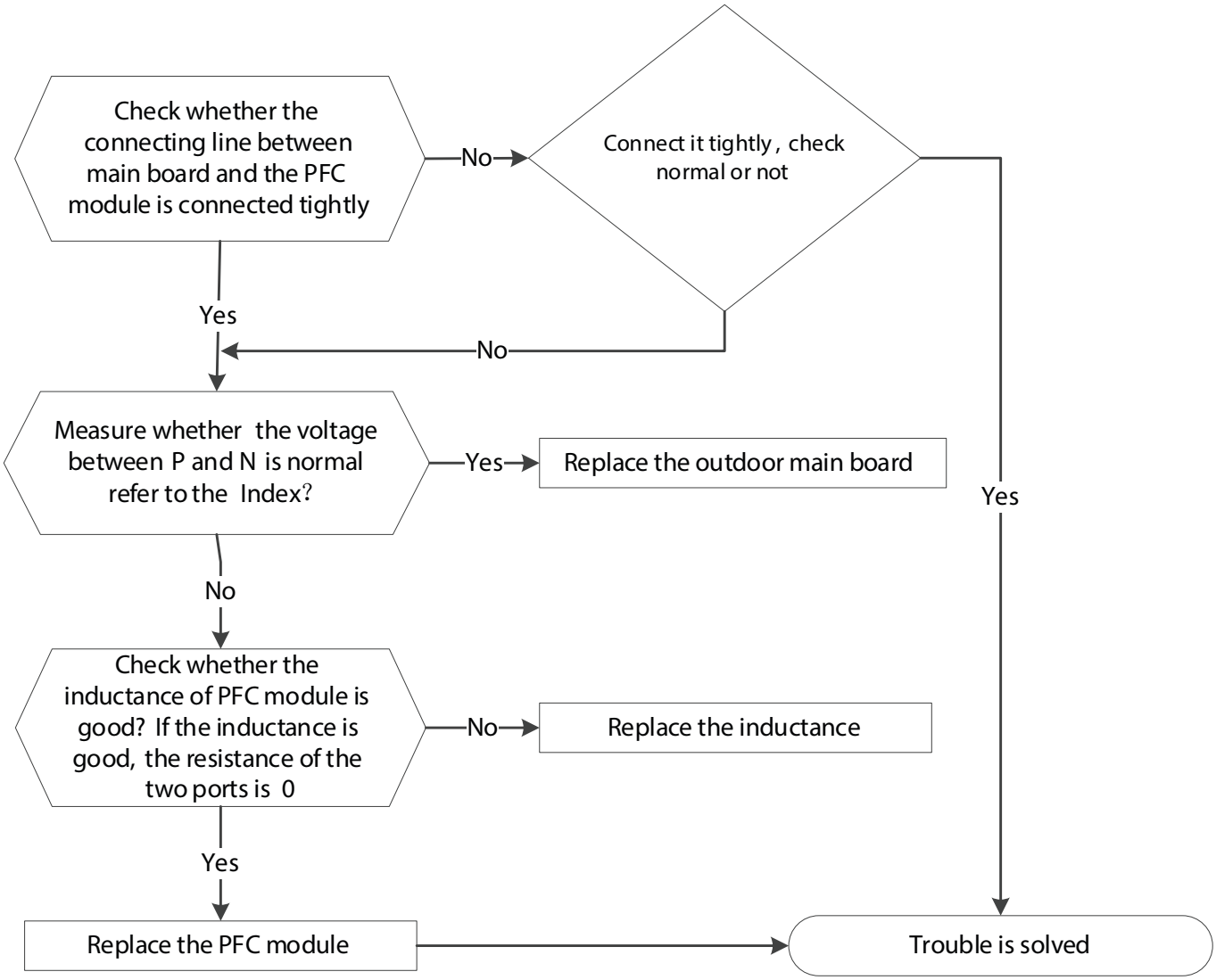

PC 10 (ODU low AC voltage protection)/ PC 11 (ODU main control board DC bus high voltage protection)/ PC 12 (ODU main control board DC bus high voltage protection /341 MCE error) Diagnosis and Solution

Description: Abnormal increases or decreases in voltage are detected by checking the specified voltage detection circuit.

Recommended parts to prepare: Power supply wires, IPM module board, Outdoor PCB, Bridge rectifier, PFC circuit or reactor

Troubleshooting and repair:

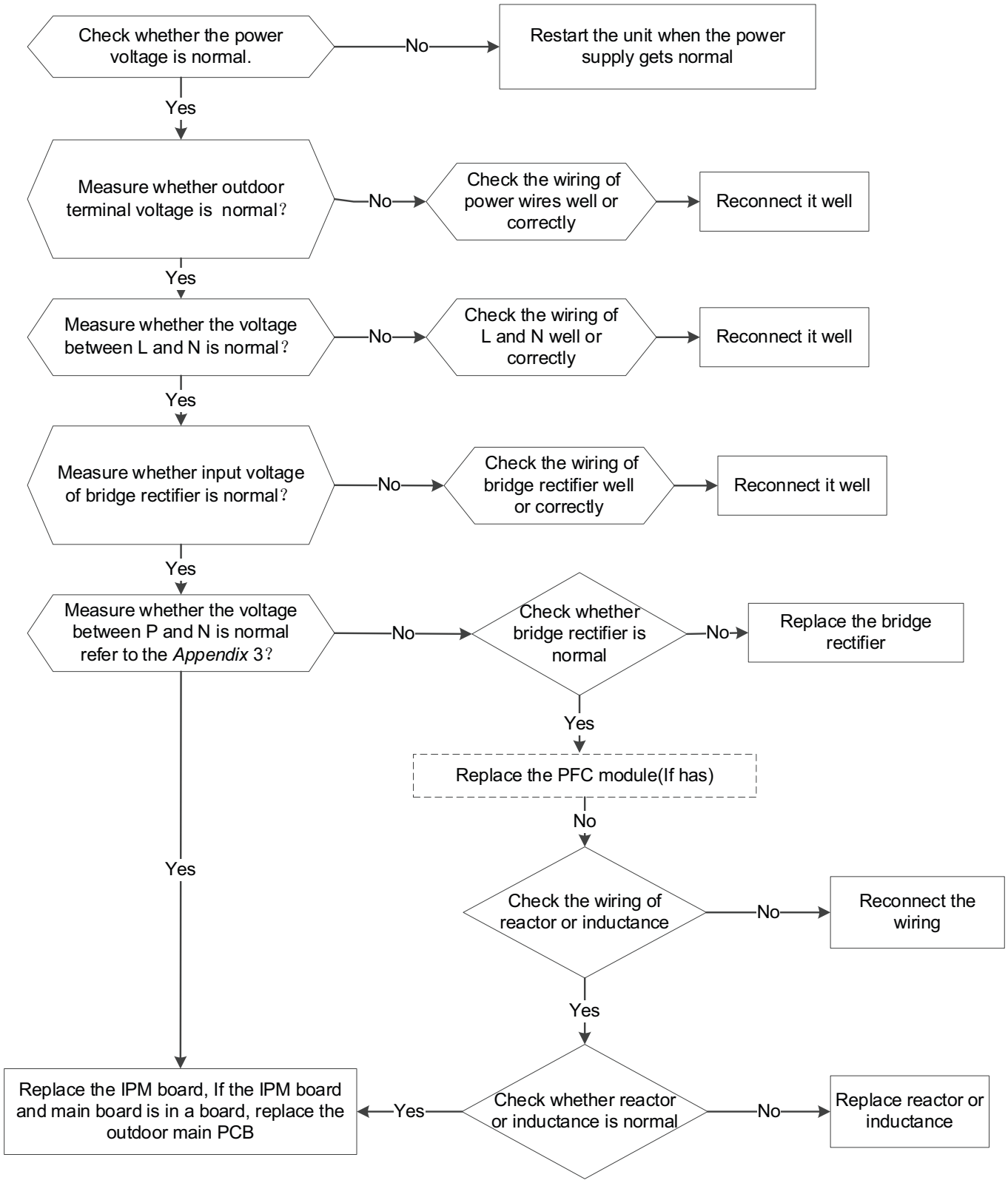

PC 0L (Low Ambient Temperature Protection)

Description: It is a protection function. When compressor is off, outdoor ambient temperature(T4) is lower than -35oC. for 10s, the AC will stop and display the failure code.

When compressor is on, outdoor ambient temperature(T4) is lower than -40oC.for 10s, the AC will stop and display the failure code.

When outdoor ambient temperature(T4) is no lower than -32oC.for 10s, the unit will exit protection

EH b3 (Communication Malfunction Between Wire and Master Control) Diagnosis and Solution

Description: If Indoor PCB does not receive feedback from wired controller, the error displays on the wired controller

Recommended parts to prepare: Connection wires, Indoor PCB, Wired controller

Troubleshooting and repair:

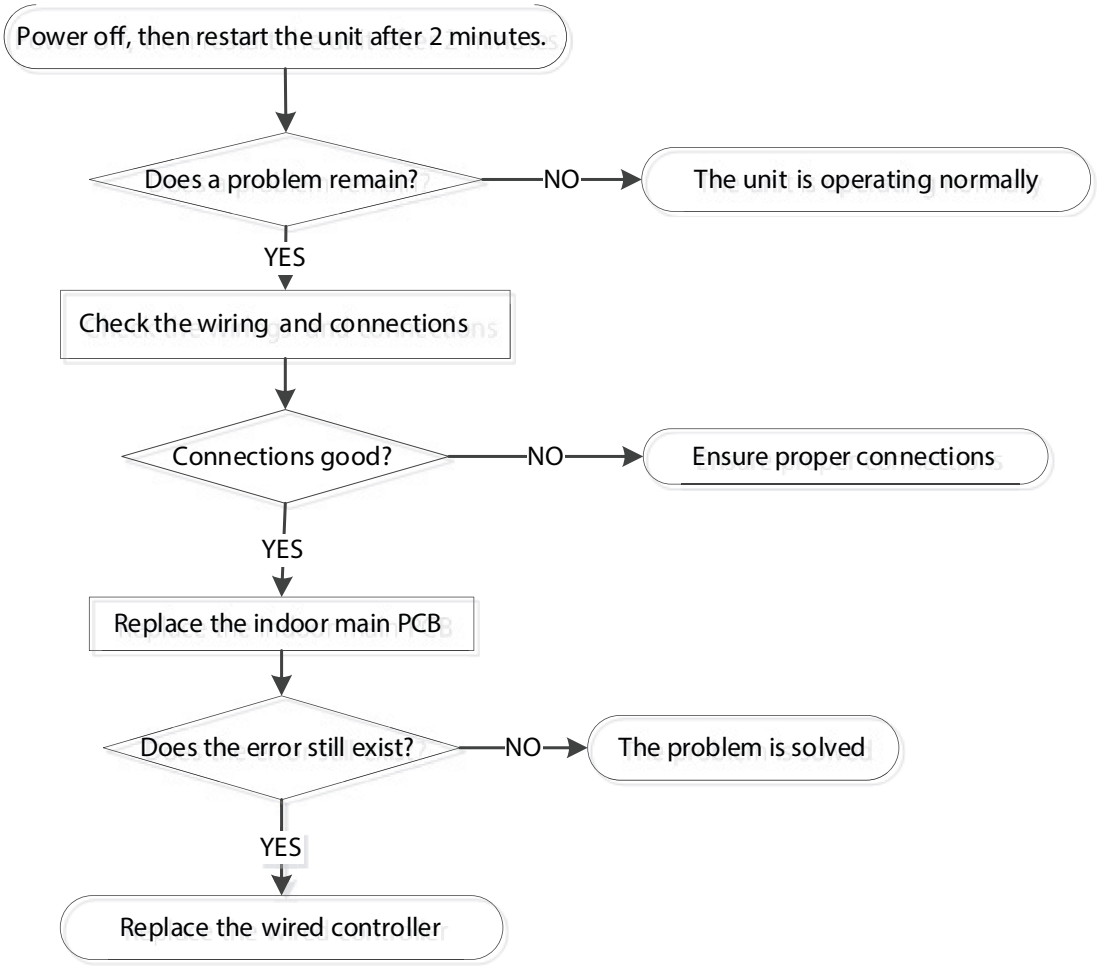

EH bA (Communication Malfunction Between Indoor Unit and External Fan Module)/ EH 3A(External Fan DC Bus Voltage Is Too Low Protection)/ EH 3b (External Fan DC Bus Voltage is Too High) Fault) Diagnosis and Solution

Description: Indoor unit does not receive the feedback from external fan module during 150 seconds. or Indoor unit receives abnormal increases or decreases in voltage from external fan module.

Recommended parts to prepare: Indoor main PCB

Troubleshooting and repair:

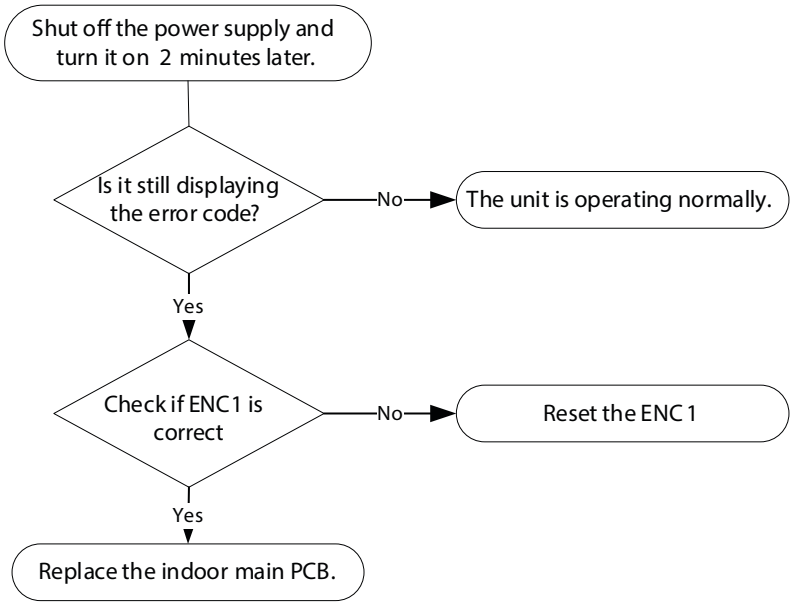

FH CC (Refrigerant Sensor Error) or EH C3(Refrigerant Sensor is Out of Range) Diagnosis and Solution

Description: Indoor unit receives fault signal for 10s or indoor unit does not receive feedback from refrigerant sensor for 150s.

Recommended parts to prepare: Connection wires, Sensors, Indoor main PCB

Troubleshooting and repair:

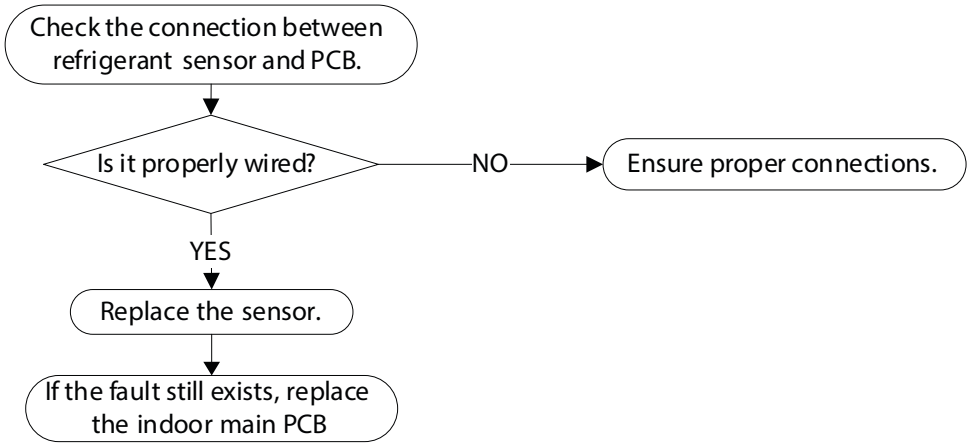

EH C1 (Refrigerant Sensor Detects Leakage) or EH C2 (Refrigerant Sensor is Out of Range and Leakage is Detected) Diagnosis and Solution

Description: The refrigerant sensor detects a concentration higher than or equal to 10%*LFL for 10 seconds or the refrigerant sensor detects a concentration higher than or equal to 20%*LFL or the multi model receives the refrigerant leakage protection fault sent by the outdoor unit.

Multi-zone: Only the buzzer of the indoor unit that detects refrigerant leakage continues to sound the alarm, the shortest sound is 10 seconds, and the longest sound is 5 minutes (you can press any key such as remote control or wire control, APP and so on to eliminate the alarm), and the other non-refrigerant leakage fault indoor unit only displays "ECC1", but the buzzer does not sound.

Recommended parts to prepare: Additional refrigerant

Troubleshooting and repair:

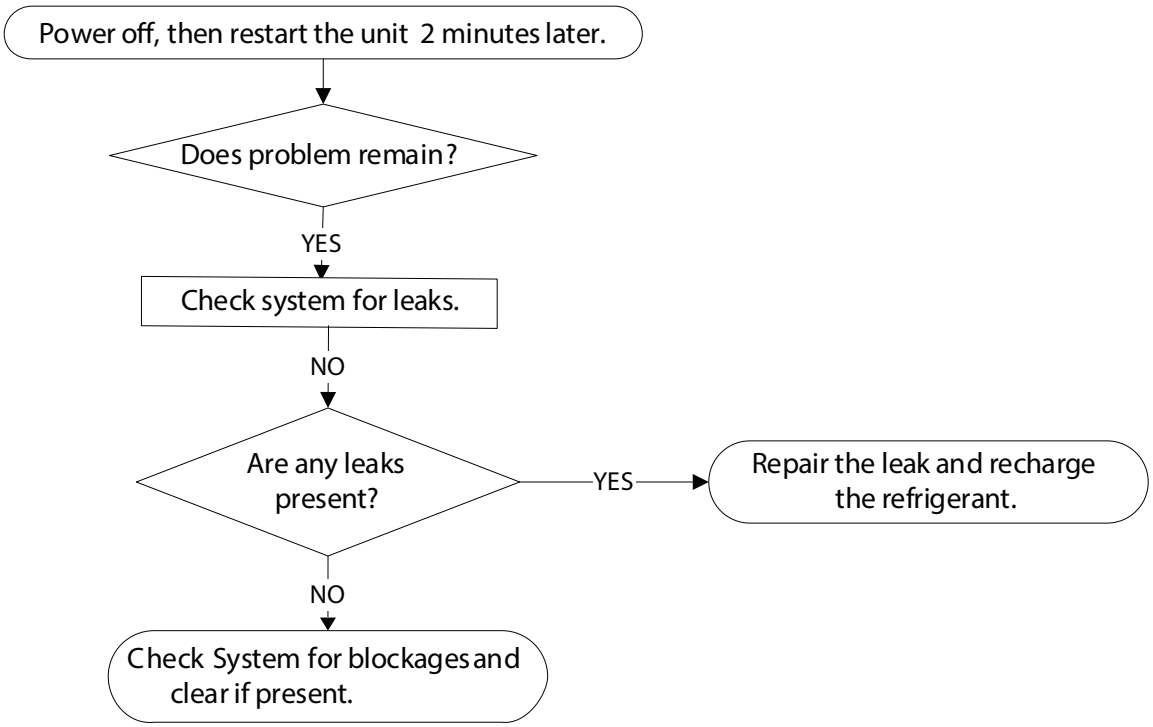

EC 0d (ODU Malfunction Diagnosis and Solution)

Description: The indoor unit detects the outdoor unit in error.

Recommended parts to prepare: Outdoor unit

Troubleshooting and repair:

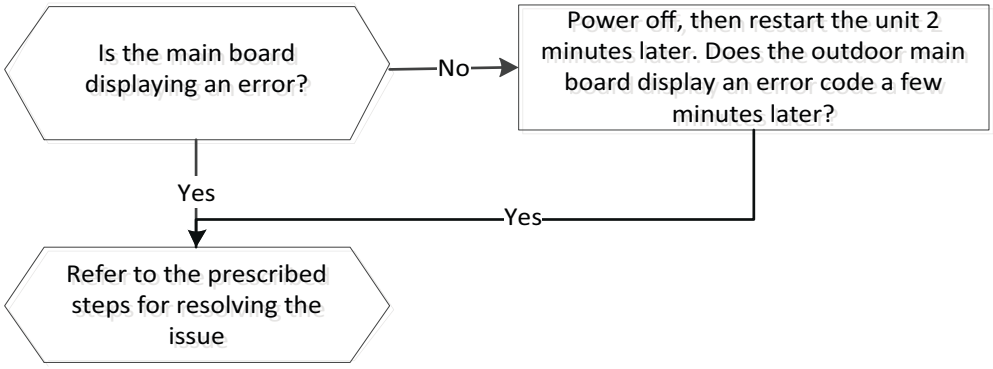

EH 0b(IDU Main Control Board and Display Board Communication Error Diagnosis and Solution)

Description: Indoor PCB does not receive feedback from the display board.

Recommended parts to prepare: Communication wire, Indoor PCB, Display board

Troubleshooting and repair:

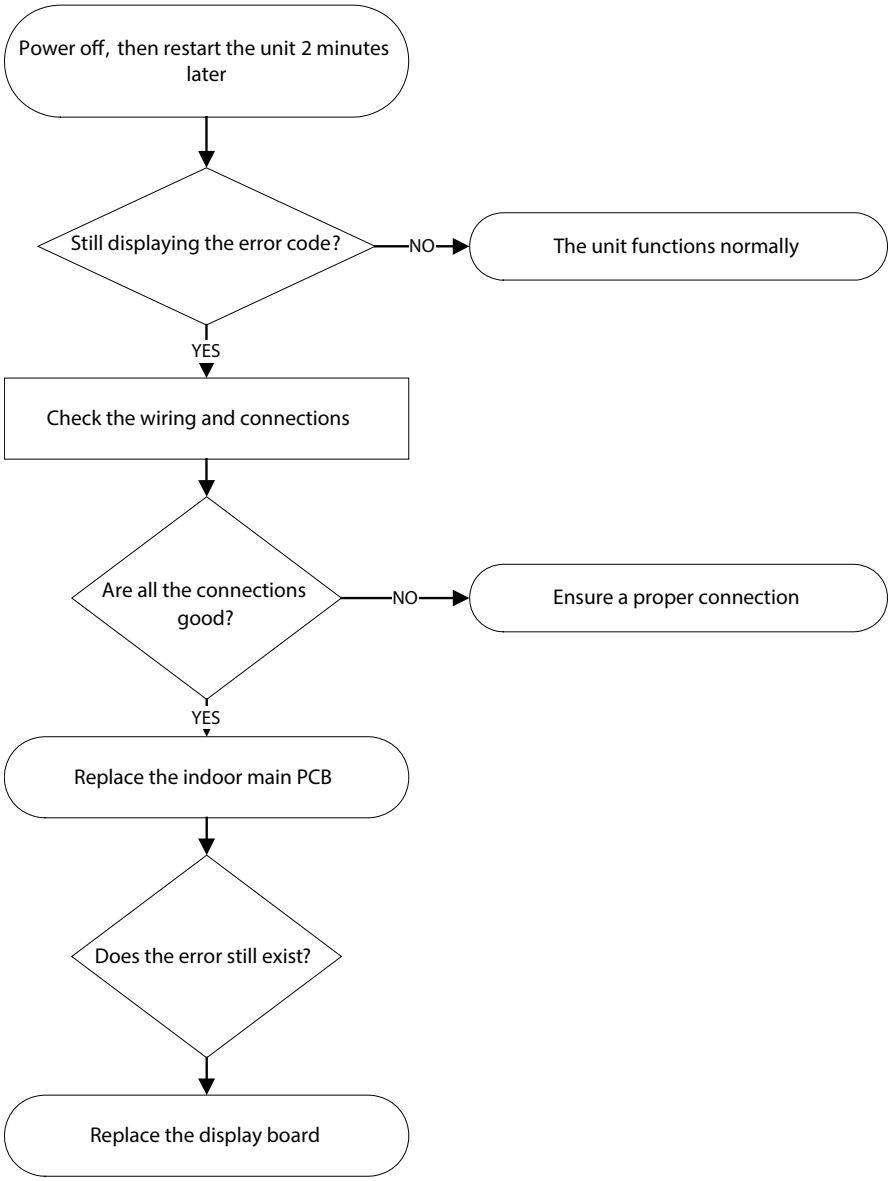

EL 16 (Communication Malfunction Between Adapter Board and Outdoor Main Board Diagnosis and Solution)

Description: The adapter PCB cannot detect the main control board.

Recommended parts to prepare: Connection wires, Adapter board, Outdoor main PCB

Troubleshooting and repair:

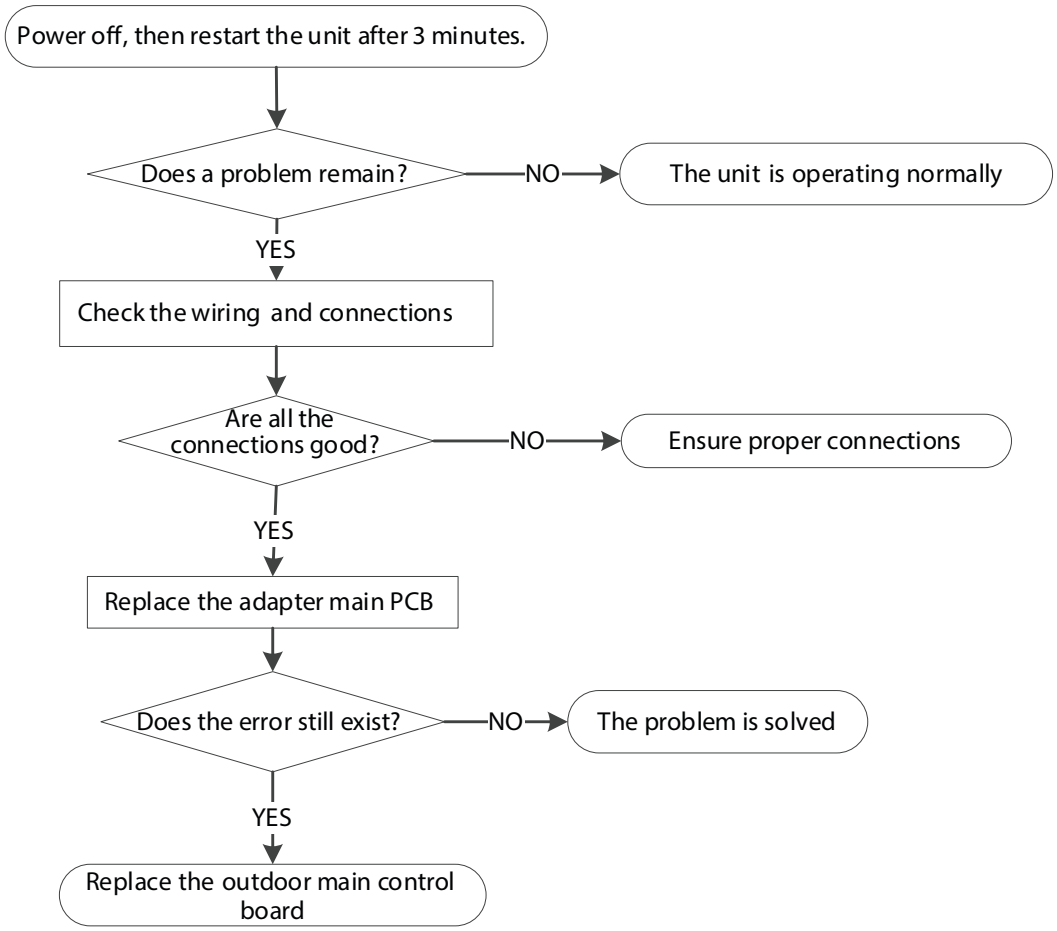

FL 09 (Mismatch between the new and old platforms diagnosis and solution)

Description: Indoor and outdoor units are mismatched, the LED displays this code. Please replace the matching indoor or outdoor unit.

PH 90 (High temperature protection of evaporator diagnosis and solution)

Description: When evaporator coil temperature is more than 60°C in heating mode, the unit stops. It starts again only when the evaporator coil temperature is less than 52°C.

Recommended parts to prepare: Connection wires, Evaporator coil temperature sensor (T2), Indoor fan, Indoor main PCB

Troubleshooting and repair:

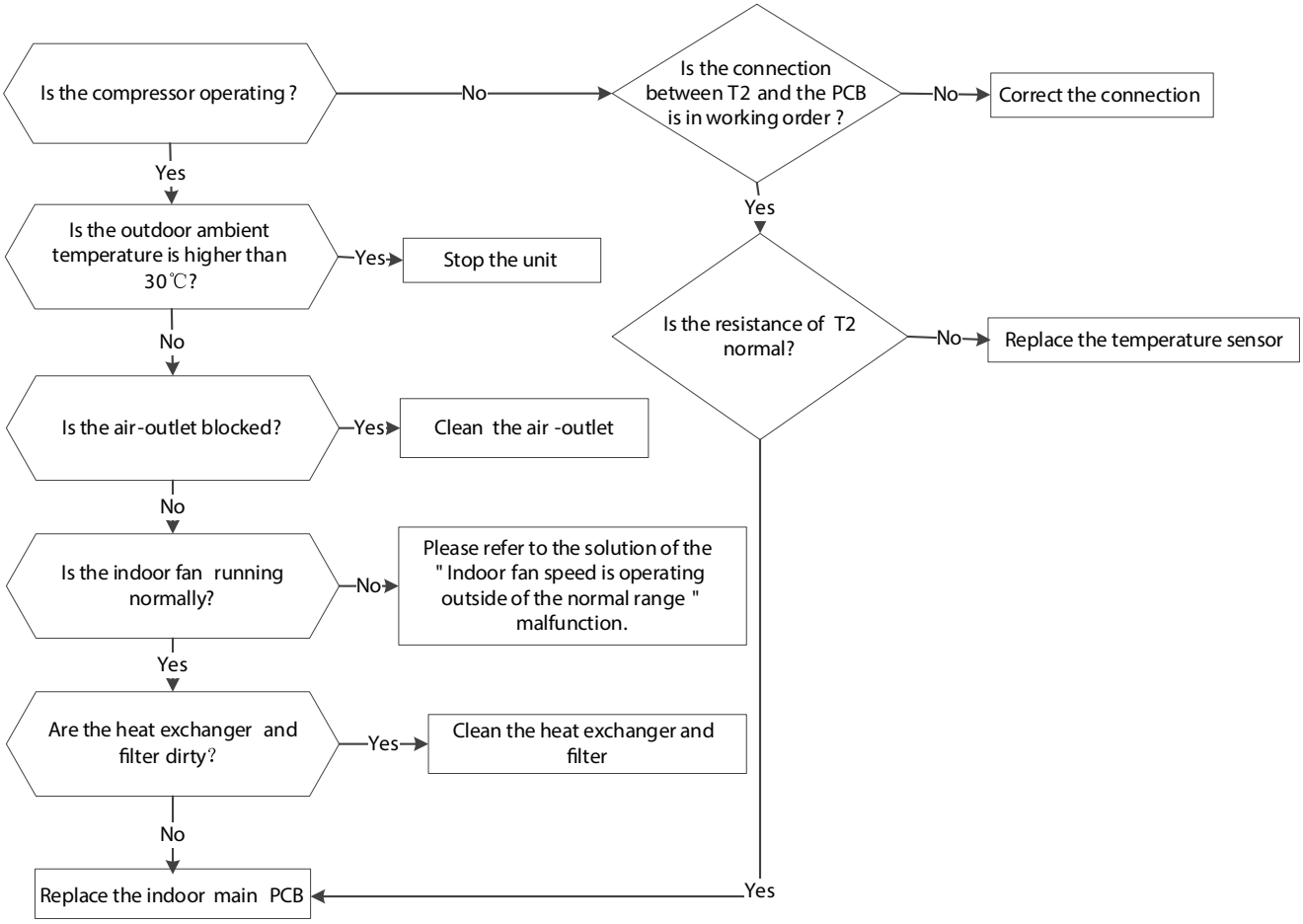

PH 91 (Low temperature protection of evaporator diagnosis and solution)

Description: When evaporator coil temperature is lower than 0°C in cooling mode or drying mode, the unit stops. It starts again only when the evaporator coil temperature is more than 5°C.

Recommended parts to prepare: Connection wires, Evaporator coil temperature sensor (T2), Indoor main PCB

Troubleshooting and repair:

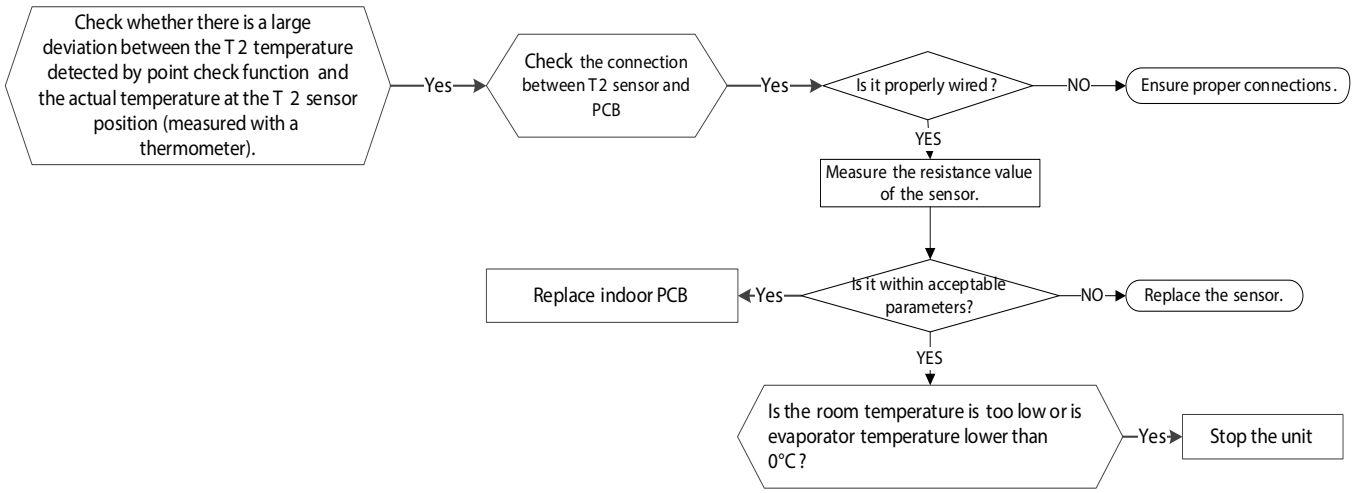

CHECK PROCEDURES

Temperature Sensor Check

⚠ WARNING

ELECTRICAL SHOCK HAZARD

Be sure to turn off all power supplies or disconnect all wires to avoid electric shock. Operate after compressor and coil have returned to normal temperature in case of injury.

1. Disconnect the temperature sensor from the PCB.
2. Measure the sensor's resistance value with a multi-meter.
3. Check the corresponding temperature sensor resistance value table (see "Temperature Sensor Resistance Value Table for TP (°C - K)" on page 100 and "Other Temperature Sensors Resistance Value Table (°C - K)" on page 101).

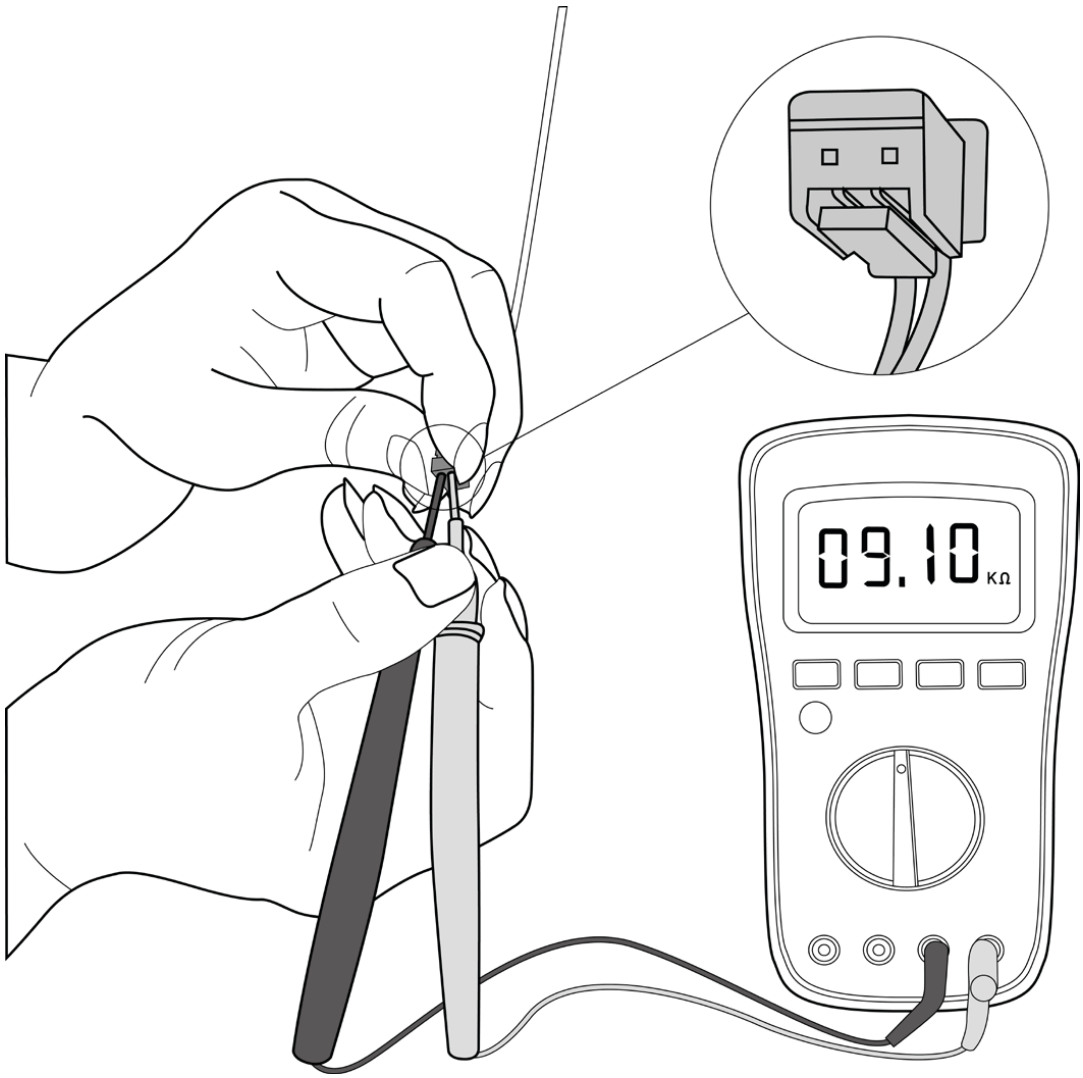

Fig. 46 —Measure the Sensor's Resistance Value

Compressor Check

1. Disconnect the compressor power cord from the outdoor PCB.
2. Measure the resistance value of each winding using a multi-meter.
3. Check the resistance value of each winding in tables 9 through 12:

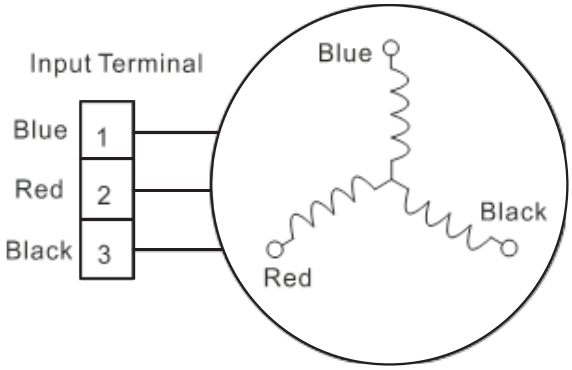

Fig. 47 —Compressor Check

Table 15 – Resistance Values

Resistance Value	KTN150D30UFZA	KTM240D46UKT2	KTF310D43UMT	ETPQ420D1UMUA ETPQ440D1UMUB KTQ420D1UMU
Blue-Red	1.02Ω	1.04Ω	0.65Ω	0.37Ω
Blue-Black				
Red-Black				

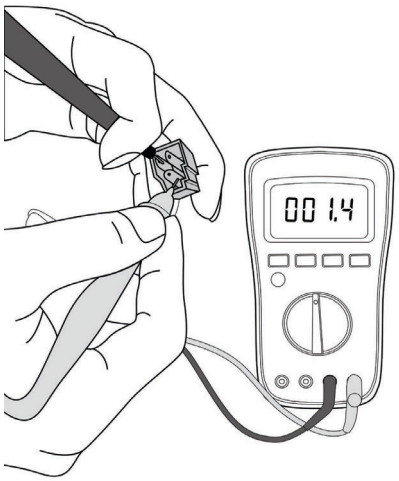

Fig. 48 —Resistance Check

NOTE: The picture and the value are only for reference, actual condition and specific value may vary.

IPM Continuity Check

WARNING

ELECTRICAL SHOCK HAZARD

Electricity remains in capacitors even when the power supply is off. Ensure the capacitors are fully discharged before troubleshooting.

1. Turn off outdoor unit and disconnect power supply.
2. Discharge electrolytic capacitors and ensure all energy-storage unit has been discharged.
3. Disassemble outdoor PCB or disassemble IPM board.
4. Measure the resistance value between P and U(V, W, N); U(V, W) and N.

Table 16 – Resistance Value

Digital Tester		Resistance Value	Digital Tester		Resistance Value
(+) Red	(-) Black		(+) Red	(-) Black	
P	N	∞ (Several MΩ)	U	N	∞ (Several MΩ)
	U		V		
	V		W		
	W		-		

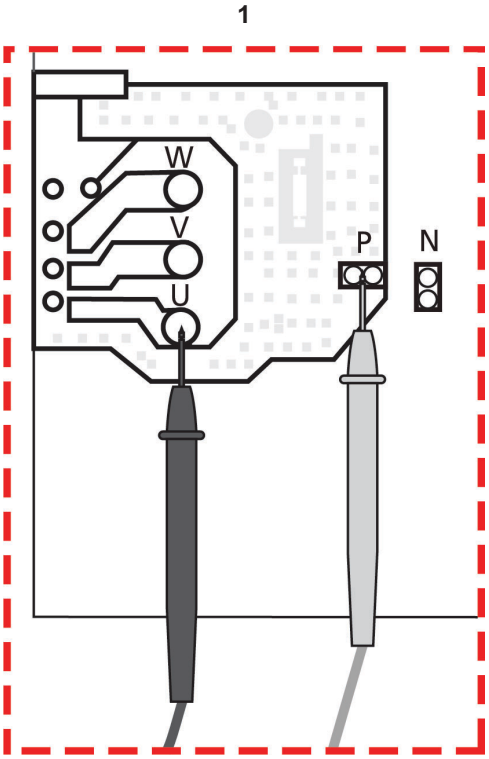

Fig. 49 —Resistance Value

Table 17 – Voltage Range

208-240V (1-phase)		
In Standby		
Around 310VDC		
In Operation		
With passive PFC module	With partial active PFC module	With fully active PFC module
>200VDC	>310VDC	>370VDC

4-Way Valve Check

1. Power on, use a digital tester to measure the voltage, when the unit operates in cooling, it is 0V. When the unit operates in heating, it is about equal to power supply voltage.
   If the value of the voltage is not in the range, the PCB must be faulty and needs to be replaced.

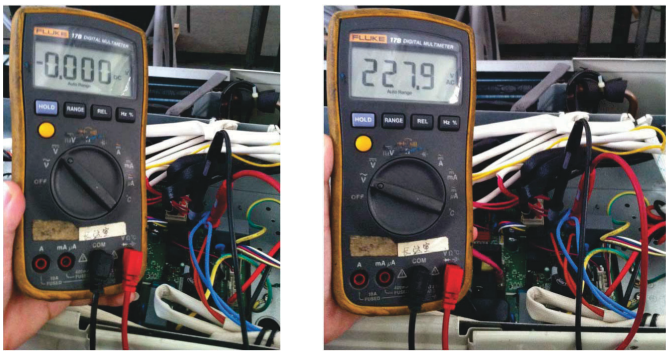

Fig. 50 —Voltage Test - Heating/Cooling

2. Turn off the power, use a digital tester to measure the resistance. The value should be 1.8~2.5 KÙ.

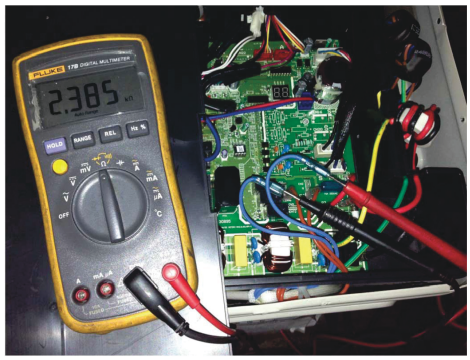

Fig. 51 —Resistance Test

EXV Check

1. Turn off outdoor unit and disconnect power supply.
2. Disconnect the connectors of EXV.

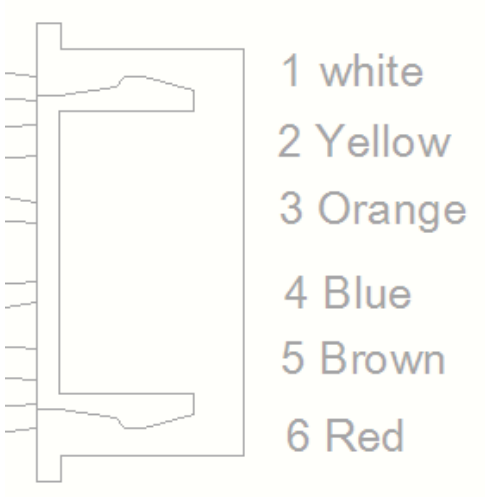

3. Measure the resistance value between Red and Blue (Yellow); Brown and Orange (White).

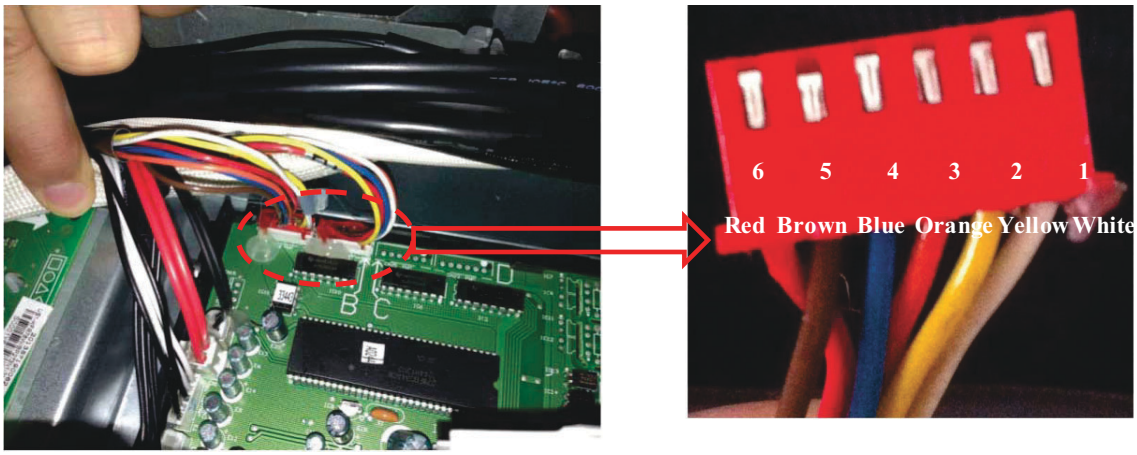

Resistance to EXV coil

Color of Lead Wire	Normal Value
Red-Blue	**About 500 Ω**
Red-Yellow	
Brown-Orange	
Brown-White	

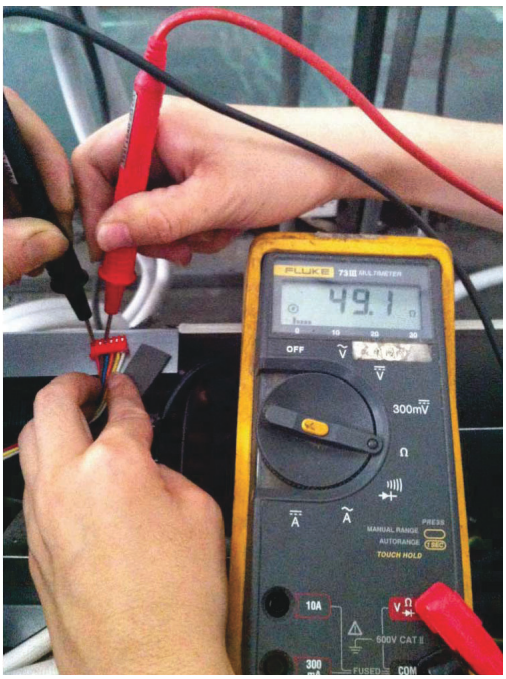

Fig. 52 —Resistance Check - Step 1 (Red-Blue)

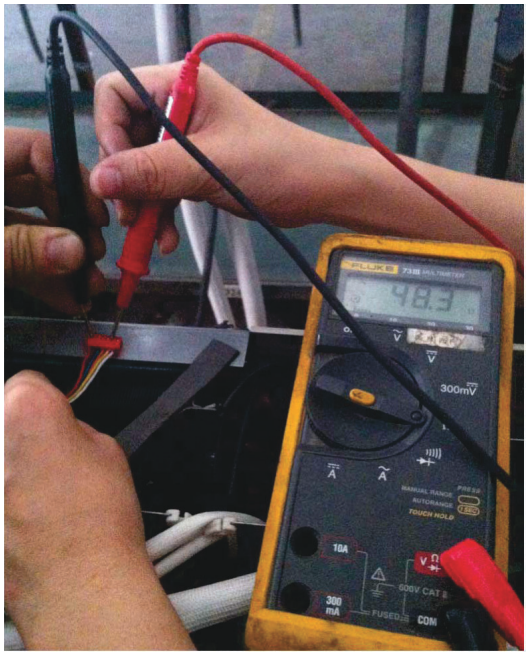

Fig. 53 —Resistance Check - Step 2 (Red-Yellow)

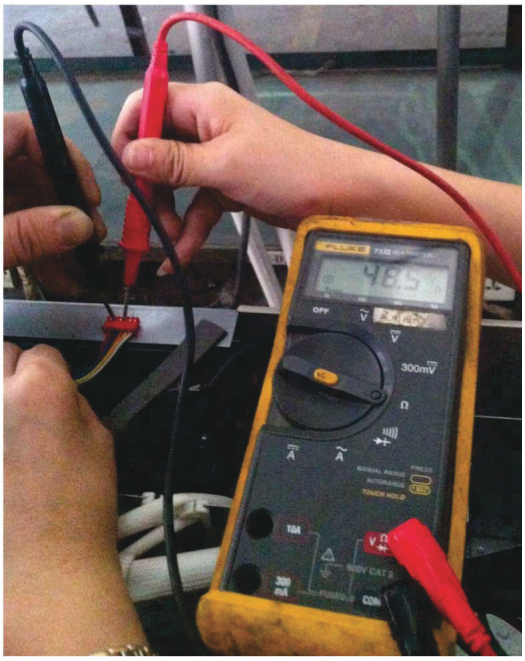

Fig. 54 —Resistance Check - Step 3 (Brown-Orange)

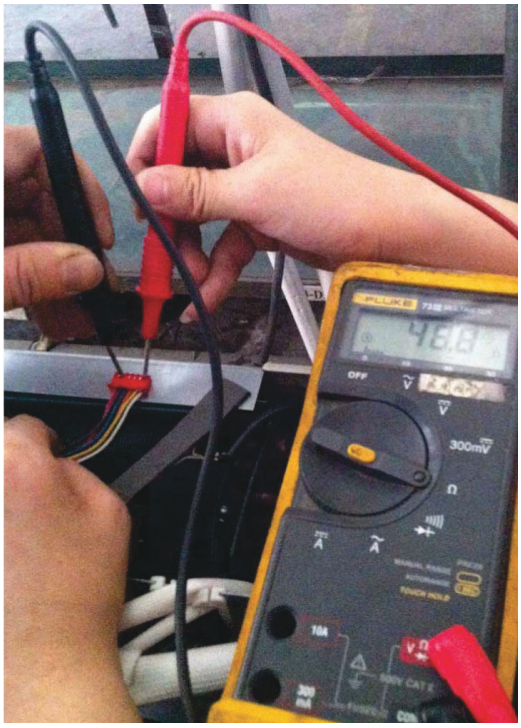

Fig. 55 —Resistance Check - Step 4 (Brown-White)

DISASSEMBLY INSTRUCTIONS

18K - 36K Unit Disassembly - Panel Plate

PROCEDURES	ILLUSTRATION
1. Turn off the air conditioner and the power breaker 2. Remove four screws and then remove the big handle. (see illustration) 3. Remove three screws and then remove the water collecting cover. (see illustration)	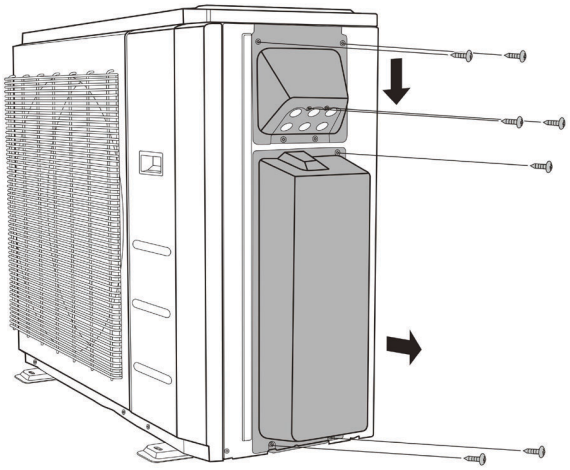
4. Remove the screws of the top cover and then remove the top cover (4 screws). Two of the screws is located underneath the big handle (see illustration)	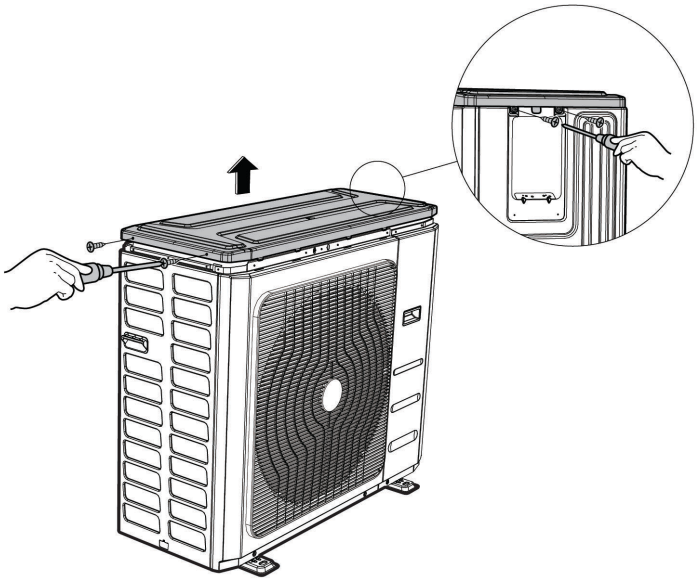

PROCEDURES	ILLUSTRATION
5. Remove the screws of the front right panel and then remove the front right panel (2 screws) (see illustration)	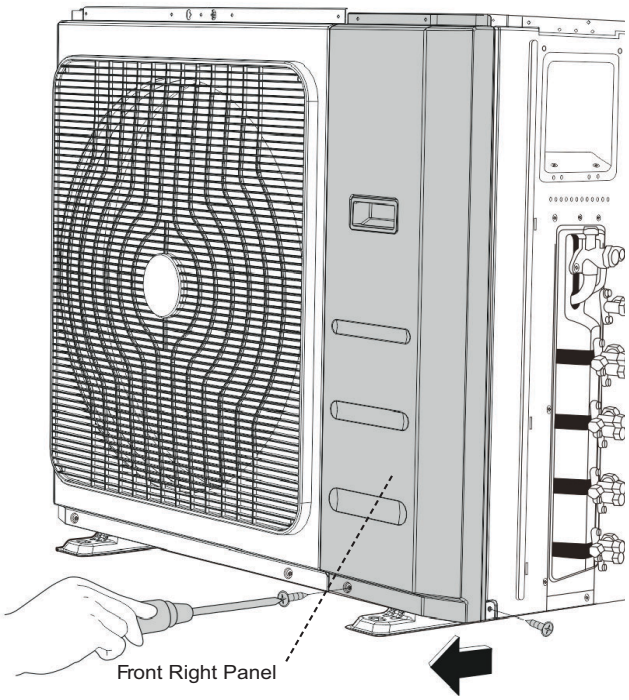
6. Remove the screws of the front panel and then remove the front panel (9 screws) (see illustration)	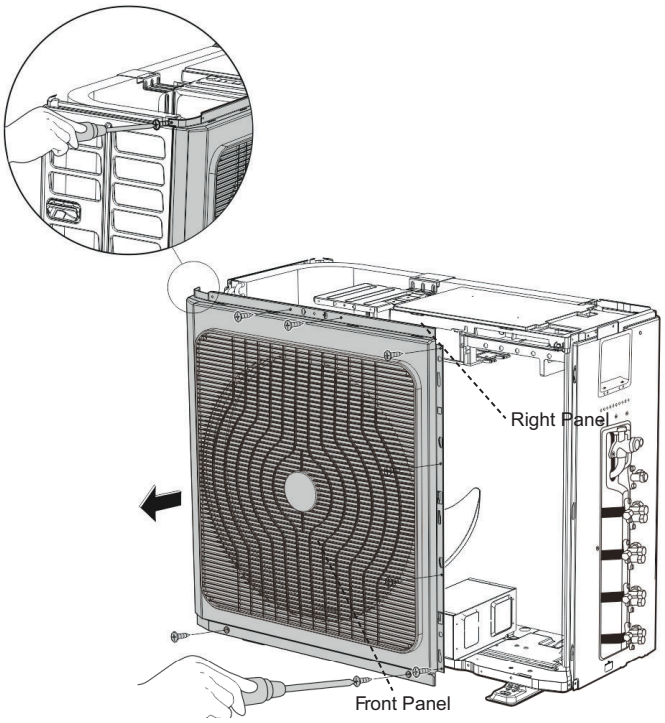

PROCEDURES	ILLUSTRATION
7. Remove the screws of the rear net and then remove the rear net (6 screws) (see illustration)	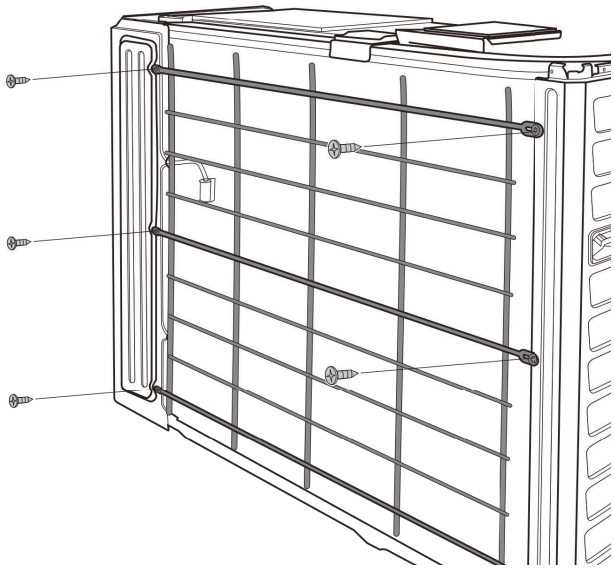
8. Remove the screws of the right panel and then remove the right panel (12 screws) (see illustration)	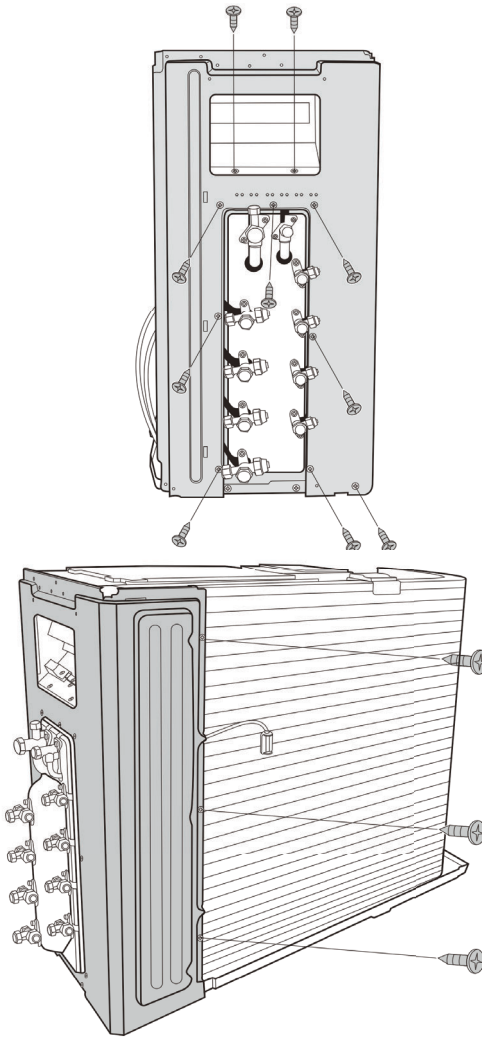

48K - 55K Unit Disassembly - Panel Plate

PROCEDURES	ILLUSTRATION
1. Turn off the air conditioner and the power breaker 2. Remove the screw of the big handle and then remove the big handle (3 screws) (see illustration) 3. Remove the screws of the water collecting cover and then remove it.(3 screws)	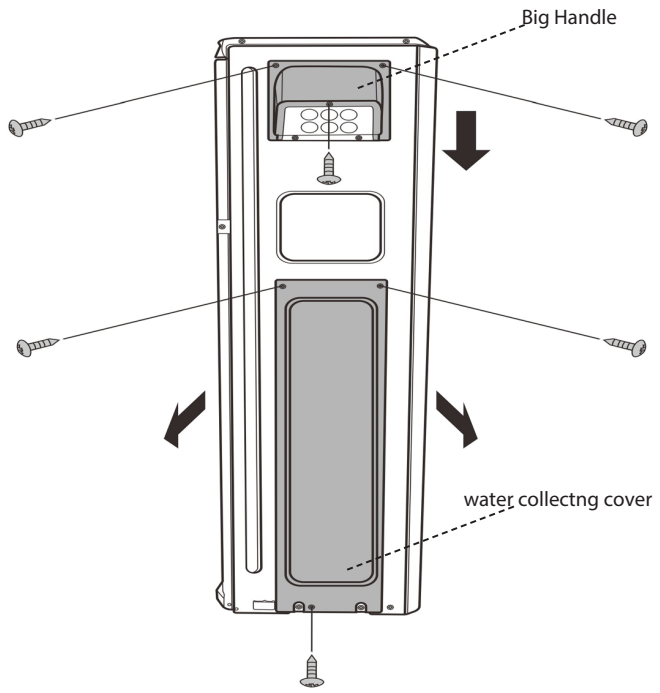
4. Remove the four screws of the top cover and then remove it. (see illustration)	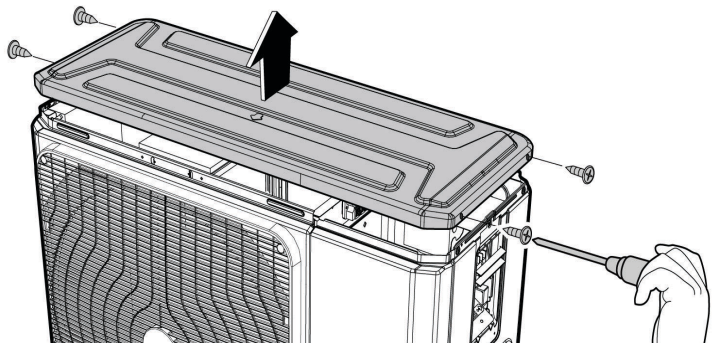

PROCEDURES	ILLUSTRATION
5. Remove the two screws of the right front panel and then push it down to unhook the right front panel from the nine hooks. (see illustration)	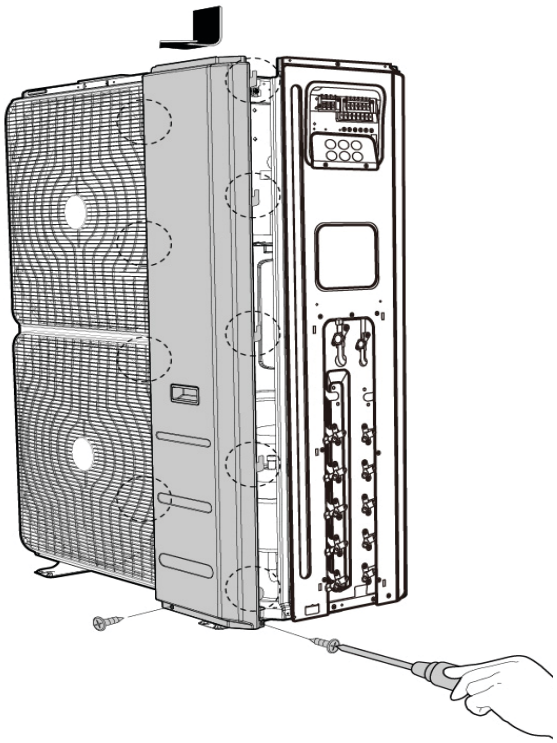
6. Remove the seven screws of the front panel and then remove the front panel (see illustration)	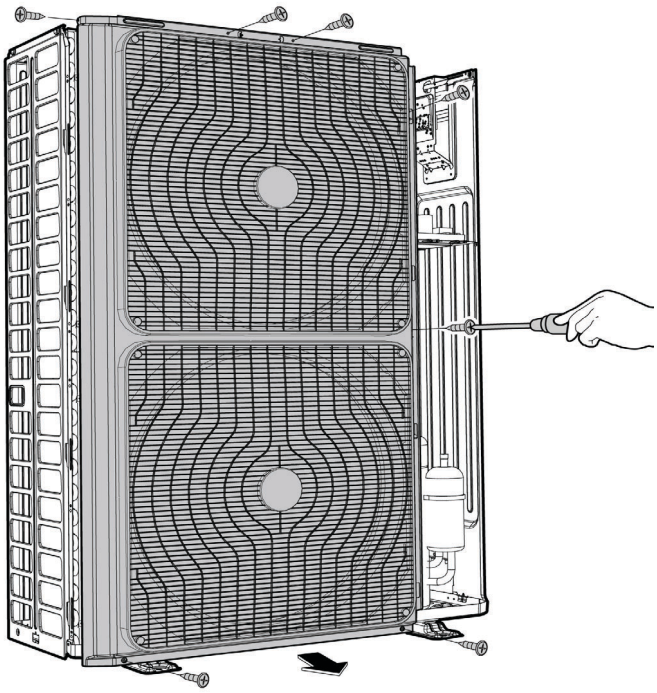

PROCEDURES	ILLUSTRATION
7. Remove the screws on the right side of the right panel.(9 screws) (see illustration)	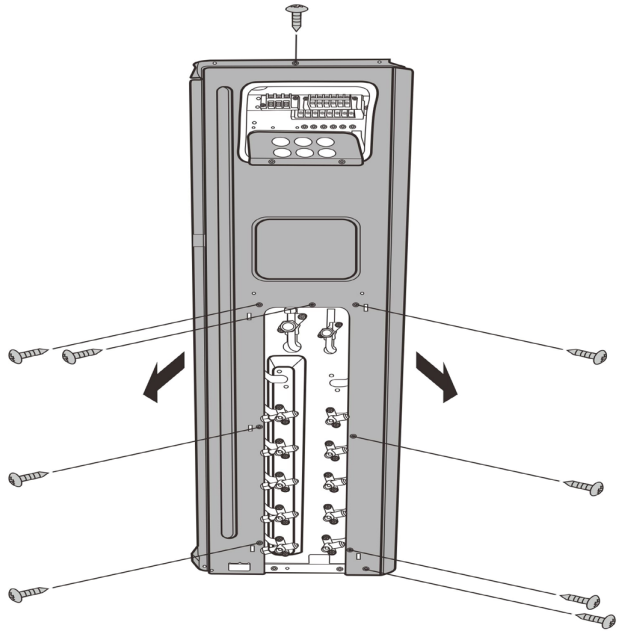
8. Remove the screws on the back of the right panel and then remove the right panel and rear net.(9 screws). (see illustration)	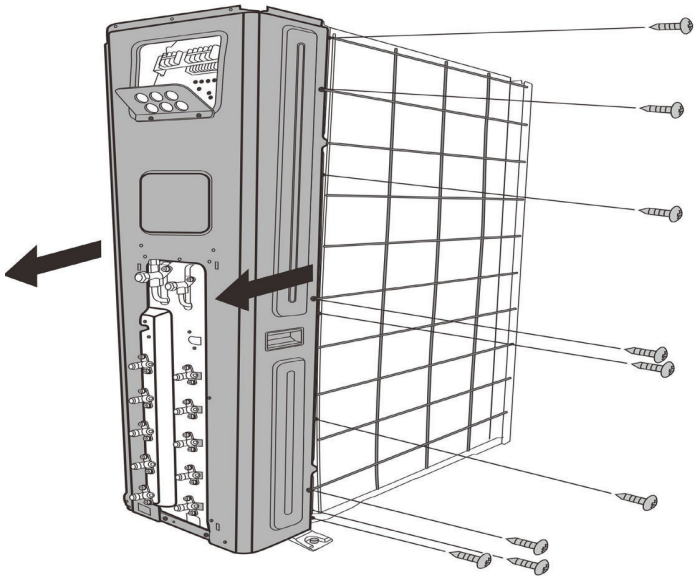

18K - 36K Disassembly - Electrical Parts

PROCEDURES	ILLUSTRATION
1. Remove the cover of electrical control box.(see illustration)	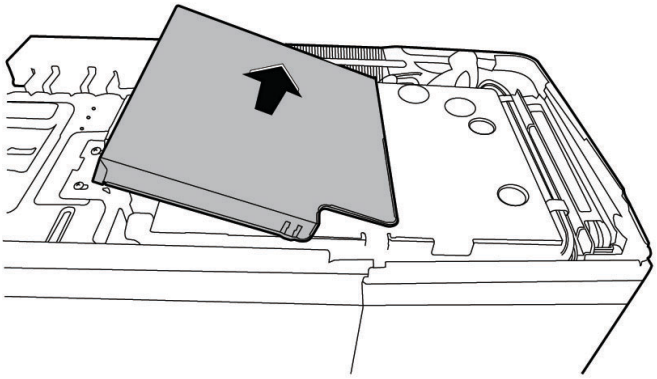
2. Disconnect the fan motor connector. (see illustration)	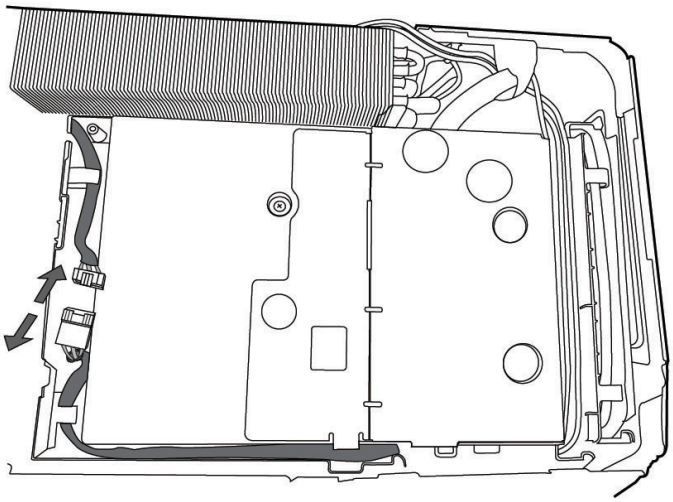
3. Remove eight attaching screws. (see illustration) 4. Turn over the electronic control box subassembly.	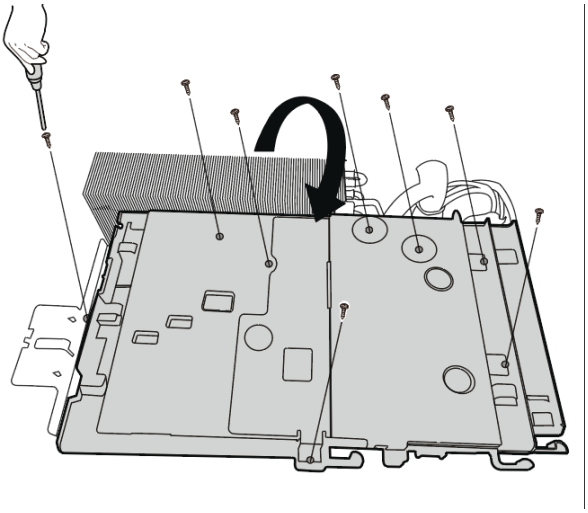

PROCEDURES	ILLUSTRATION
5. Remove 3 screws and then remove the bracket. (see illustration) 6. Disconnect the connectors from the electronic control board. (see illustration) 7. Remove 3 screws and then remove the electronic control board. (see illustration)	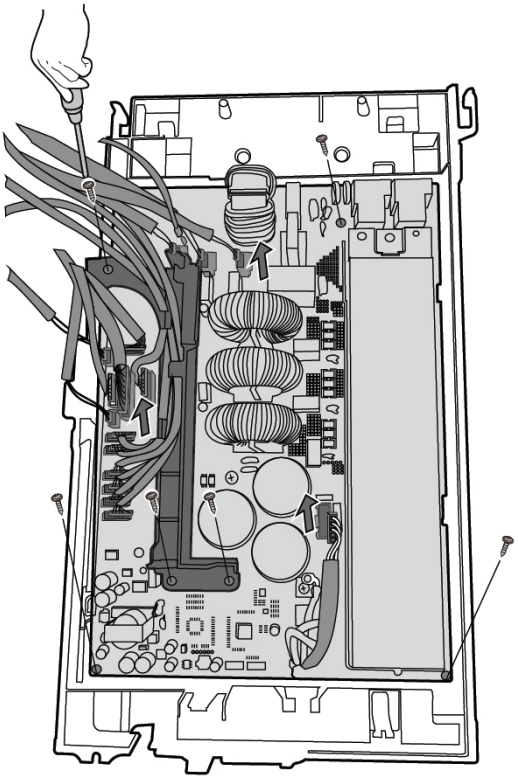
8. Pull out the connector, remove one screw and then remove the key board subassembly on terminal board. (see illustration)	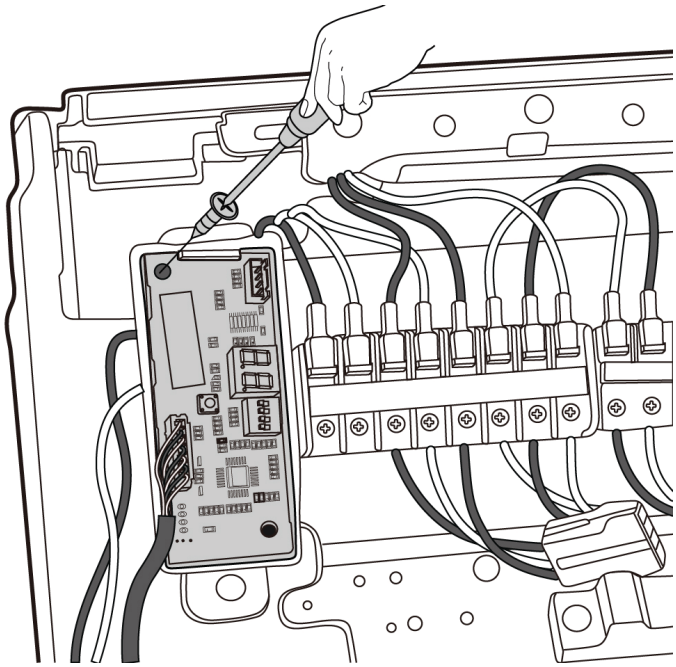

48K - 55K Disassembly - Electrical Parts

PROCEDURES	ILLUSTRATION
1. Remove the cover of electrical control box.(see illustration)	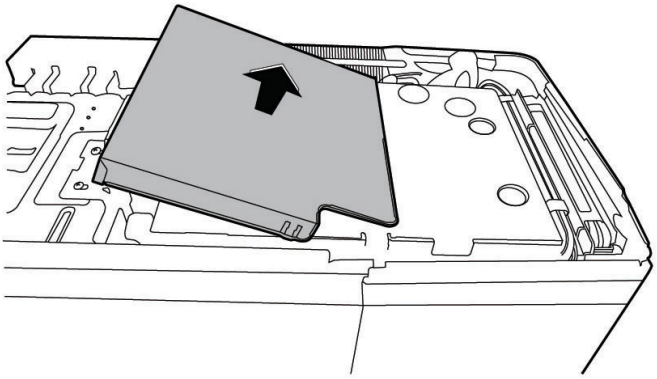
2. Disconnect the fan motor connector. (see illustration)	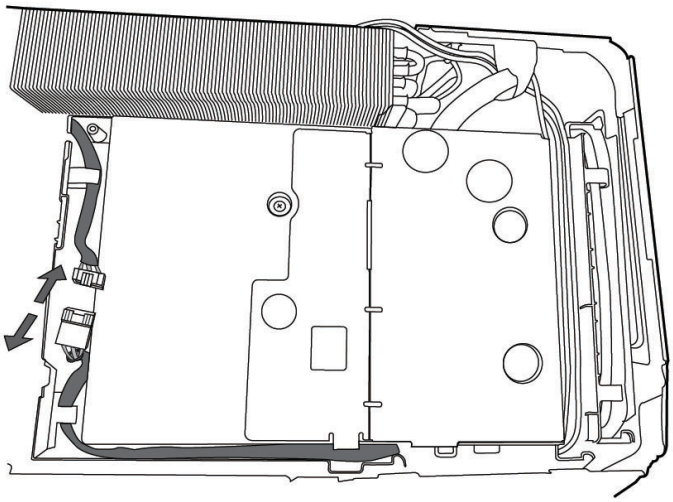
3. Remove eight attaching screws. (see illustration) 4. Turn over the electronic control box subassembly.	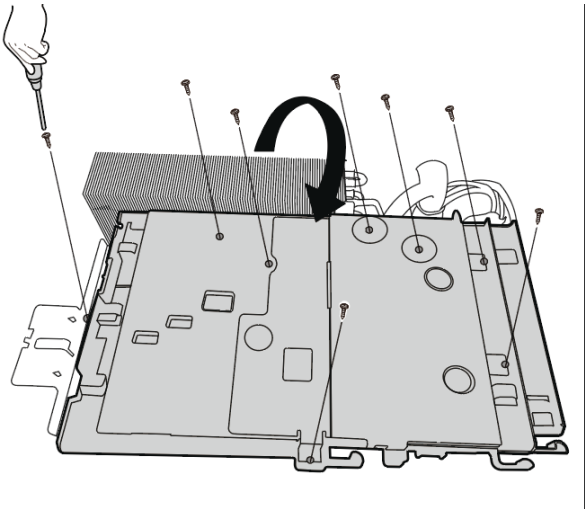

PROCEDURES	ILLUSTRATION
5. Disconnect the connectors from the electronic control board. (see illustration) 6. Remove 3 screws and then remove the electronic control board. (see illustration)	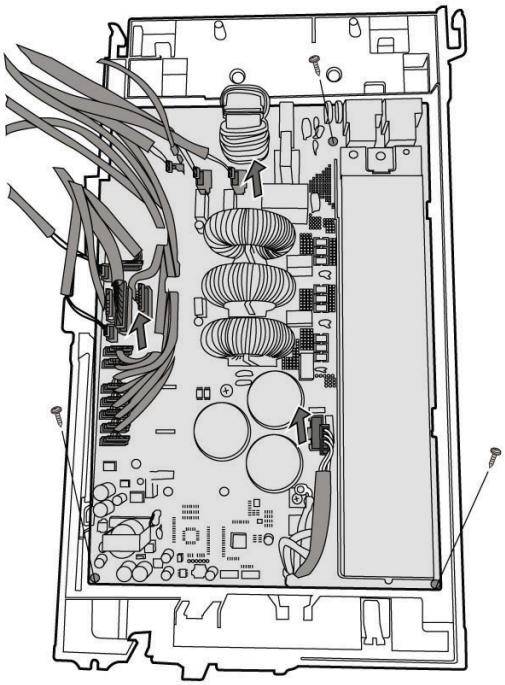
7. Pull out the connector, remove one screw and then remove the key board subassembly on terminal board. (see illustration)	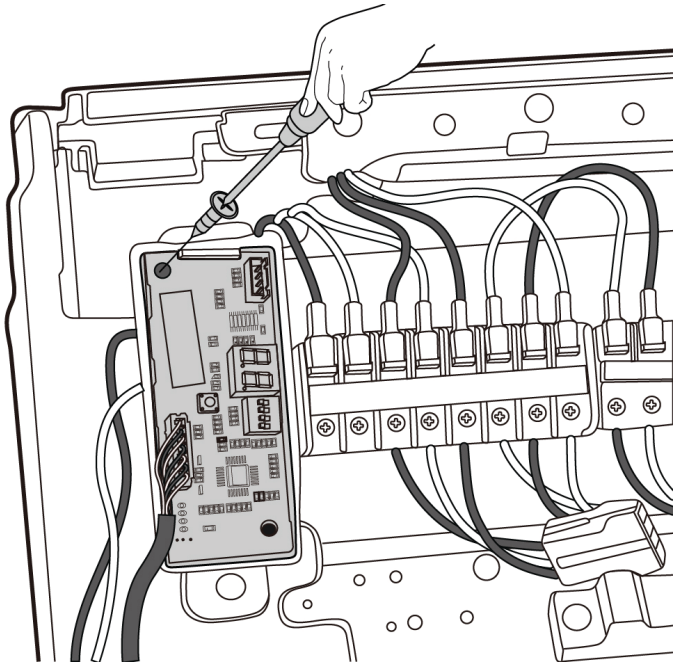

All Size Units, Disassembly - Fan Assembly

PROCEDURES	ILLUSTRATION
1. Remove the nut securing the fan with a spanner. 2. Remove the fan. (see illustration)	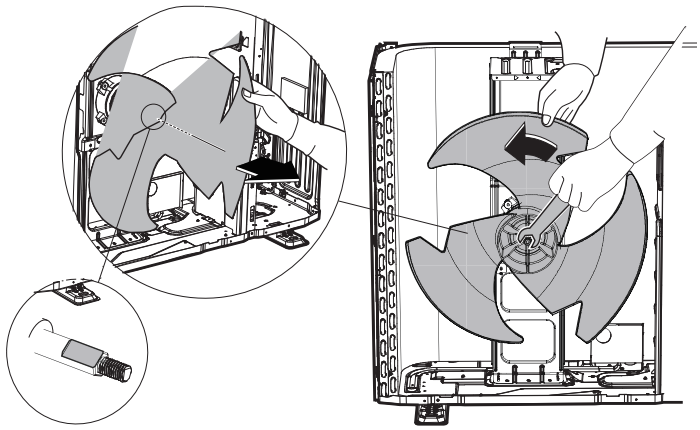 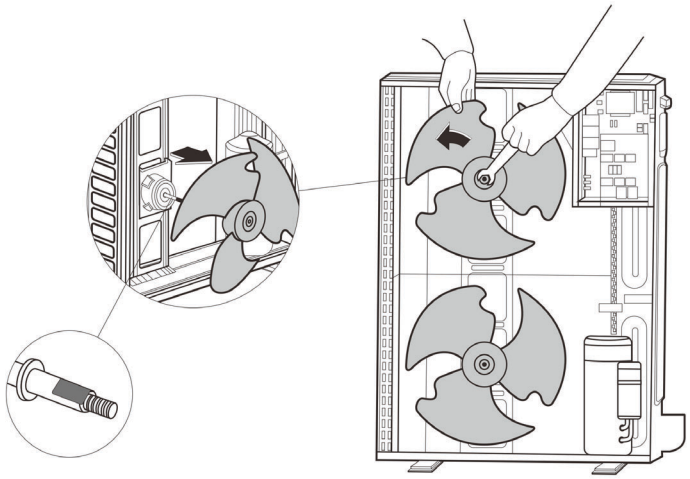

All Size Units, Disassembly - Fan Motor

PROCEDURES	ILLUSTRATION
1. Remove the fixing screws of the fan motor (4 screws) 2. Remove the fan motor. (see illustration)	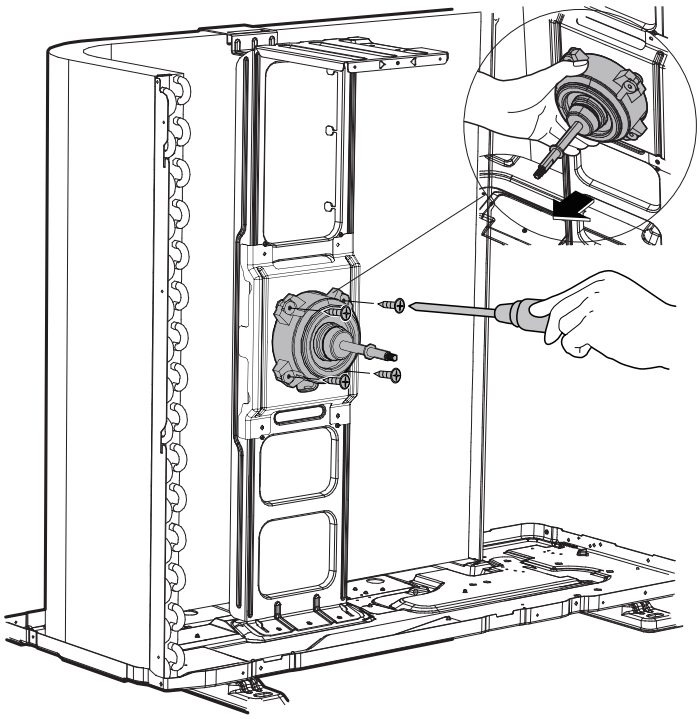

All Size Units, Disassembly - Sound Blanket

PROCEDURES	ILLUSTRATION
1. Remove the sound blanket (side and top)) (see illustration)	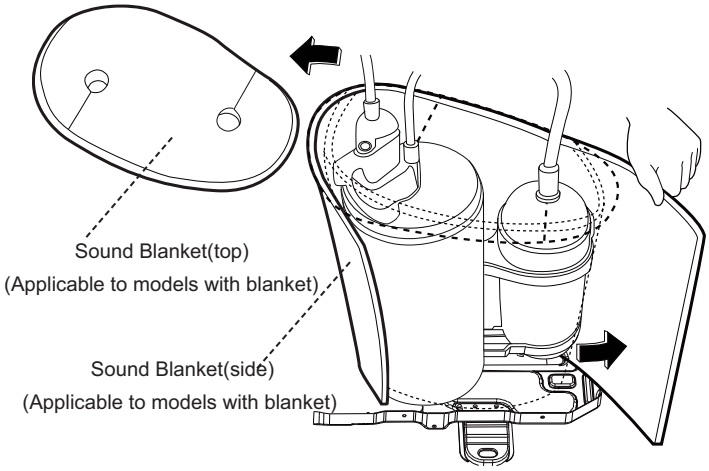

All Size Units, Disassembly - Four-Way Valve (For Heat Pump Models

⚠ WARNING

FIRE HAZARD

Evacuate the system and confirm that there is no refrigerant left in the system before removing the four-way valve and the compressor. (For R32 & R290, you should evacuate the system with the vacuum pump; flush the system with nitrogen; then repeat the two steps before heating up the brazed parts. The operations above should be implemented by professionals.)

NOTE: Remove the panel plate, connection of four-way valve on PCB (refer to “18K - 36K Unit Disassembly - Panel Plate” on page 84, “18K - 36K Unit Disassembly - Panel Plate” on page 84, “48K - 55K Unit Disassembly - Panel Plate” on page 87, or “48K - 55K Unit Disassembly - Panel Plate” on page 87 and “18K - 36K Disassembly - Electrical Parts” on page 90) before disassembling sound blanket.

PROCEDURES	ILLUSTRATION
1. Heat up the brazed parts and then detach the the four-way valve and the piper. (see illustration) 2. Remove the four-way valve assembly with pliers. (see illustration)	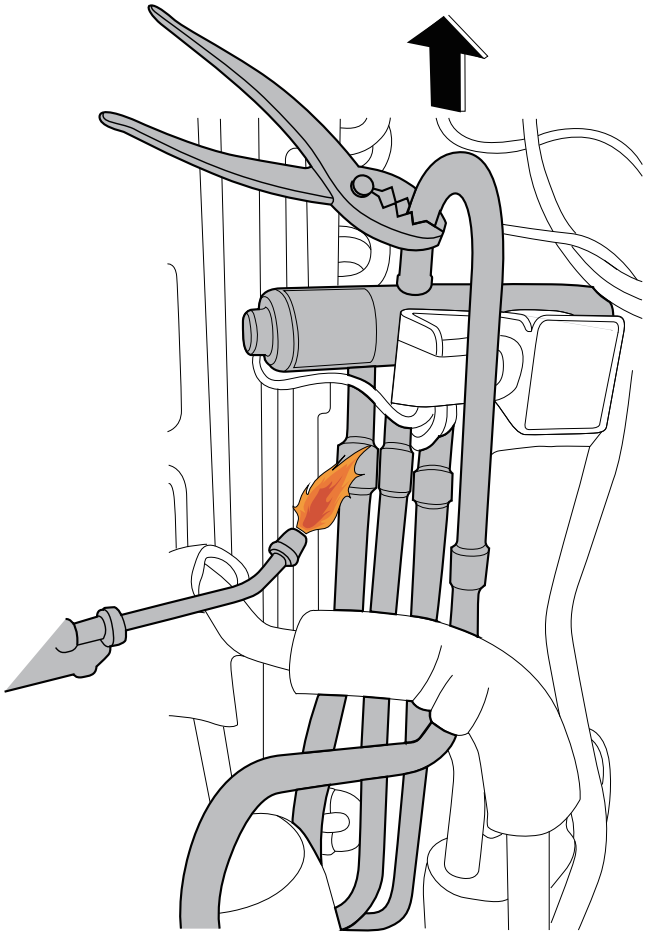

All Size Units, Disassembly - Compressor

⚠ WARNING

EXPLOSION RISK

Evacuate the system and confirm that there is no refrigerant left in the system before removing the four-way valve and the compressor. (For R32 & R290, you should evacuate the system with the vacuum pump; flush the system with nitrogen; then repeat the two steps before heating up the brazed parts. The operations above should be implemented by professionals.)

NOTE: Remove the panel plate, connection of four-way valve on PCB (refer to “18K - 36K Unit Disassembly - Panel Plate” on page 84, “18K - 36K Unit Disassembly - Panel Plate” on page 84, “48K - 55K Unit Disassembly - Panel Plate” on page 87, or “48K - 55K Unit Disassembly - Panel Plate” on page 87 and “18K - 36K Disassembly - Electrical Parts” on page 90) before disassembling sound blanket.

PROCEDURES	ILLUSTRATION
1. Remove the flange nut of terminal cover and remove the terminal cover (see illustration)	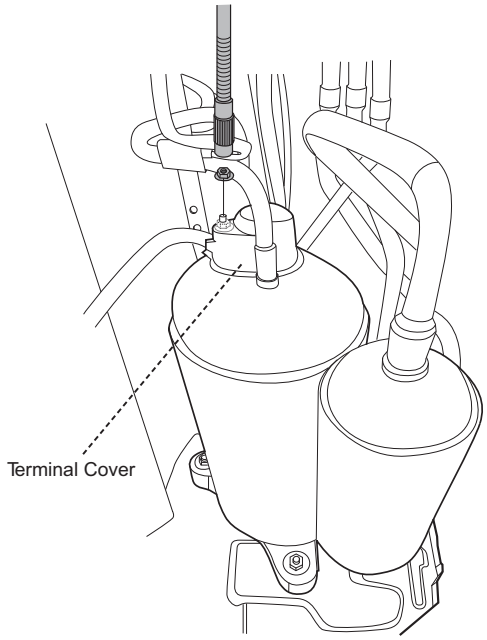
2. Disconnect the connectors	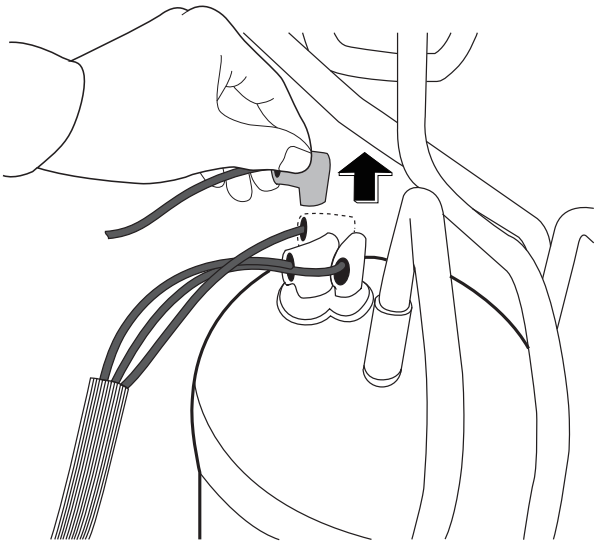

PROCEDURES	ILLUSTRATION
3. Remove the hex nuts and washers securing the compressor, located on the bottom plate. (see illustration)	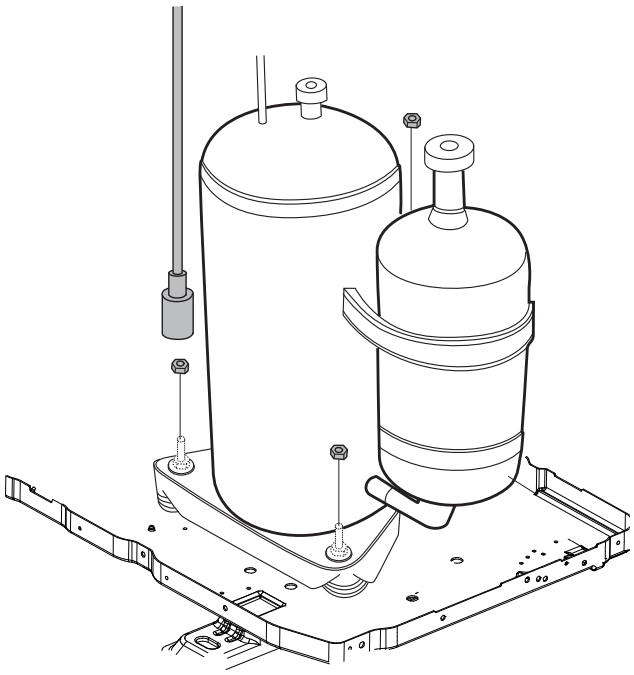
4. Heat up the brazed parts and then remove the the discharge pipe and the suction pipe. (see illustration) 5. Lift the compressor from the base pan assembly with pliers. (see illustration)	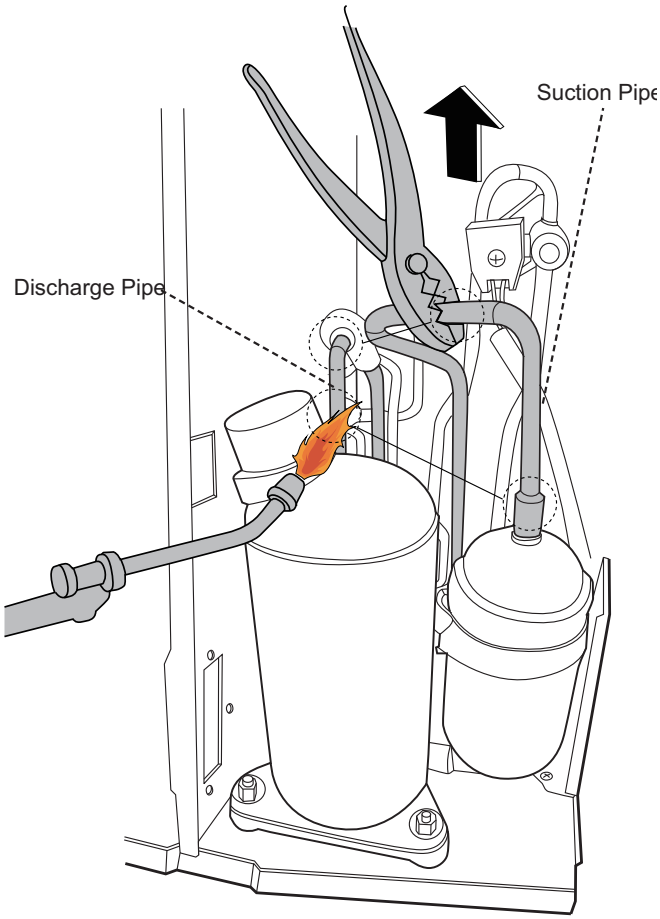

APPENDIX

Temperature Sensor Resistance Value Table for TP (°C - K)

°C	°F	K Ohm	°C	°F	K Ohm	°C	°F	K Ohm	°C	°F	K Ohm
-20	-4	542.7	20	68	68.66	60	140	13.59	100	212	3.702
-19	-2	511.9	21	70	65.62	61	142	13.11	101	214	3.595
-18	0	483	22	72	62.73	62	144	12.65	102	216	3.492
-17	1	455.9	23	73	59.98	63	145	12.21	103	217	3.392
-16	3	430.5	24	75	57.37	64	147	11.79	104	219	3.296
-15	5	406.7	25	77	54.89	65	149	11.38	105	221	3.203
-14	7	384.3	26	79	52.53	66	151	10.99	106	223	3.113
-13	9	363.3	27	81	50.28	67	153	10.61	107	225	3.025
-12	10	343.6	28	82	48.14	68	154	10.25	108	226	2.941
-11	12	325.1	29	84	46.11	69	156	9.902	109	228	2.86
-10	14	307.7	30	86	44.17	70	158	9.569	110	230	2.781
-9	16	291.3	31	88	42.33	71	160	9.248	111	232	2.704
-8	18	275.9	32	90	40.57	72	162	8.94	112	234	2.63
-7	19	261.4	33	91	38.89	73	163	8.643	113	235	2.559
-6	21	247.8	34	93	37.3	74	165	8.358	114	237	2.489
-5	23	234.9	35	95	35.78	75	167	8.084	115	239	2.422
-4	25	222.8	36	97	34.32	76	169	7.82	116	241	2.357
-3	27	211.4	37	99	32.94	77	171	7.566	117	243	2.294
-2	28	200.7	38	100	31.62	78	172	7.321	118	244	2.233
-1	30	190.5	39	102	30.36	79	174	7.086	119	246	2.174
0	32	180.9	40	104	29.15	80	176	6.859	120	248	2.117
1	34	171.9	41	106	28	81	178	6.641	121	250	2.061
2	36	163.3	42	108	26.9	82	180	6.43	122	252	2.007
3	37	155.2	43	109	25.86	83	181	6.228	123	253	1.955
4	39	147.6	44	111	24.85	84	183	6.033	124	255	1.905
5	41	140.4	45	113	23.89	85	185	5.844	125	257	1.856
6	43	133.5	46	115	22.89	86	187	5.663	126	259	1.808
7	45	127.1	47	117	22.1	87	189	5.488	127	261	1.762
8	46	121	48	118	21.26	88	190	5.32	128	262	1.717
9	48	115.2	49	120	20.46	89	192	5.157	129	264	1.674
10	50	109.8	50	122	19.69	90	194	5	130	266	1.632
11	52	104.6	51	124	18.96	91	196	4.849	?	?	?
12	54	99.69	52	126	18.26	92	198	4.703	?	?	?
13	55	95.05	53	127	17.58	93	199	4.562	?	?	?
14	57	90.66	54	129	16.94	94	201	4.426	?	?	?
15	59	86.49	55	131	16.32	95	203	4.294	?	?	?
16	61	82.54	56	133	15.73	96	205	4.167	?	?	?
17	63	78.79	57	135	15.16	97	207	4.045	?	?	?
18	64	75.24	58	136	14.62	98	208	3.927	?	?	?
19	66	71.86	59	138	14.09	99	210	3.812	?	?	?

Manufacturer reserves the right to change, at any time, specifications and designs without notice and without obligations.

Other Temperature Sensors Resistance Value Table (°C - K)

°C	°F	K Ohm	°C	°F	K Ohm	°C	°F	K Ohm	°C	°F	K Ohm
-20	-4	115.266	20	68	12.6431	60	140	2.35774	100	212	0.62973
-19	-2	108.146	21	70	12.0561	61	142	2.27249	101	214	0.61148
-18	0	101.517	22	72	11.5	62	144	2.19073	102	216	0.59386
-17	1	96.3423	23	73	10.9731	63	145	2.11241	103	217	0.57683
-16	3	89.5865	24	75	10.4736	64	147	2.03732	104	219	0.56038
-15	5	84.219	25	77	10	65	149	1.96532	105	221	0.54448
-14	7	79.311	26	79	9.55074	66	151	1.89627	106	223	0.52912
-13	9	74.536	27	81	9.12445	67	153	1.83003	107	225	0.51426
-12	10	70.1698	28	82	8.71983	68	154	1.76647	108	226	0.49989
-11	12	66.0898	29	84	8.33566	69	156	1.70547	109	228	0.486
-10	14	62.2756	30	86	7.97078	70	158	1.64691	110	230	0.47256
-9	16	58.7079	31	88	7.62411	71	160	1.59068	111	232	0.45957
-8	18	56.3694	32	90	7.29464	72	162	1.53668	112	234	0.44699
-7	19	52.2438	33	91	6.98142	73	163	1.48481	113	235	0.43482
-6	21	49.3161	34	93	6.68355	74	165	1.43498	114	237	0.42304
-5	23	46.5725	35	95	6.40021	75	167	1.38703	115	239	0.41164
-4	25	44	36	97	6.13059	76	169	1.34105	116	241	0.4006
-3	27	41.5878	37	99	5.87359	77	171	1.29078	117	243	0.38991
-2	28	39.8239	38	100	5.62961	78	172	1.25423	118	244	0.37956
-1	30	37.1988	39	102	5.39689	79	174	1.2133	119	246	0.36954
0	32	35.2024	40	104	5.17519	80	176	1.17393	120	248	0.35982
1	34	33.3269	41	106	4.96392	81	178	1.13604	121	250	0.35042
2	36	31.5635	42	108	4.76253	82	180	1.09958	122	252	0.3413
3	37	29.9058	43	109	4.5705	83	181	1.06448	123	253	0.33246
4	39	28.3459	44	111	4.38736	84	183	1.03069	124	255	0.3239
5	41	26.8778	45	113	4.21263	85	185	0.99815	125	257	0.31559
6	43	25.4954	46	115	4.04589	86	187	0.96681	126	259	0.30754
7	45	24.1932	47	117	3.88673	87	189	0.93662	127	261	0.29974
8	46	22.5662	48	118	3.73476	88	190	0.90753	128	262	0.29216
9	48	21.8094	49	120	3.58962	89	192	0.8795	129	264	0.28482
10	50	20.7184	50	122	3.45097	90	194	0.85248	130	266	0.2777
11	52	19.6891	51	124	3.31847	91	196	0.82643	131	268	0.27078
12	54	18.7177	52	126	3.19183	92	198	0.80132	132	270	0.26408
13	55	17.8005	53	127	3.07075	93	199	0.77709	133	271	0.25757
14	57	16.9341	54	129	2.95896	94	201	0.75373	134	273	0.25125
15	59	16.1156	55	131	2.84421	95	203	0.73119	135	275	0.24512
16	61	15.3418	56	133	2.73823	96	205	0.70944	136	277	0.23916
17	63	14.6181	57	135	2.63682	97	207	0.68844	137	279	0.23338
18	64	13.918	58	136	2.53973	98	208	0.66818	138	280	0.22776
19	66	13.2631	59	138	2.44677	99	210	0.64862	139	282	0.22231

Manufacturer reserves the right to change, at any time, specifications and designs without notice and without obligations.

System Pressure Table-R454B

Pressure			Temperature		Pressure			Temperature	
Kpa	bar	PSI	°C	°F	Kpa	bar	PSI	°C	°F
58.196	0.58	8.44	-60	-76	935.23	9.35	135.64	8	46.4
61.517	0.62	8.92	-59	-74.2	963.75	9.64	139.78	9	48.2
64.988	0.65	9.43	-58	-72.4	992.93	9.93	144.01	10	50
68.615	0.69	9.95	-57	-70.6	1022.8	10.23	148.34	11	51.8
72.402	0.72	10.50	-56	-68.8	1053.3	10.53	152.76	12	53.6
76.354	0.76	11.07	-55	-67	1084.5	10.85	157.29	13	55.4
80.478	0.80	11.67	-54	-65.2	1116.4	11.16	161.91	14	57.2
84.776	0.85	12.30	-53	-63.4	1149	11.49	166.64	15	59
89.256	0.89	12.95	-52	-61.6	1182.3	11.82	171.47	16	60.8
93.923	0.94	13.62	-51	-59.8	1216.3	12.16	176.40	17	62.6
98.781	0.99	14.33	-50	-58	1251.1	12.51	181.45	18	64.4
103.84	1.04	15.06	-49	-56.2	1286.6	12.87	186.60	19	66.2
109.1	1.09	15.82	-48	-54.4	1322.8	13.23	191.85	20	68
114.56	1.15	16.61	-47	-52.6	1359.9	13.60	197.23	21	69.8
120.25	1.20	17.44	-46	-50.8	1397.7	13.98	202.71	22	71.6
126.15	1.26	18.30	-45	-49	1436.3	14.36	208.31	23	73.4
132.28	1.32	19.18	-44	-47.2	1475.7	14.76	214.02	24	75.2
138.64	1.39	20.11	-43	-45.4	1515.9	15.16	219.85	25	77
145.24	1.45	21.06	-42	-43.6	1557	15.57	225.82	26	78.8
152.09	1.52	22.06	-41	-41.8	1598.9	15.99	231.89	27	80.6
159.18	1.59	23.09	-40	-40	1641.6	16.42	238.09	28	82.4
166.54	1.67	24.15	-39	-38.2	1685.2	16.85	244.41	29	84.2
174.15	1.74	25.26	-38	-36.4	1729.7	17.30	250.86	30	86
182.04	1.82	26.40	-37	-34.6	1775	17.75	257.43	31	87.8
190.2	1.90	27.59	-36	-32.8	1821.3	18.21	264.15	32	89.6
198.65	1.99	28.81	-35	-31	1868.4	18.68	270.98	33	91.4
207.39	2.07	30.08	-34	-29.2	1916.5	19.17	277.95	34	93.2
216.42	2.16	31.39	-33	-27.4	1965.6	19.66	285.08	35	95
225.76	2.26	32.74	-32	-25.6	2015.5	20.16	292.31	36	96.8
235.41	2.35	34.14	-31	-23.8	2066.5	20.67	299.71	37	98.6
245.37	2.45	35.59	-30	-22	2118.4	21.18	307.24	38	100.4
255.67	2.56	37.08	-29	-20.2	2171.3	21.71	314.91	39	102.2
266.29	2.66	38.62	-28	-18.4	2225.2	22.25	322.73	40	104
277.25	2.77	40.21	-27	-16.6	2280.2	22.80	330.70	41	105.8
288.56	2.89	41.85	-26	-14.8	2336.1	23.36	338.81	42	107.6
300.22	3.00	43.54	-25	-13	2393.2	23.93	347.09	43	109.4
312.24	3.12	45.28	-24	-11.2	2451.3	24.51	355.52	44	111.2
324.63	3.25	47.08	-23	-9.4	2510.4	25.10	364.09	45	113
337.39	3.37	48.93	-22	-7.6	2570.7	25.71	372.84	46	114.8
350.54	3.51	50.84	-21	-5.8	2632.1	26.32	381.74	47	116.6
364.08	3.64	52.80	-20	-4	2694.7	26.95	390.82	48	118.4
378.02	3.78	54.83	-19	-2.2	2758.3	27.58	400.04	49	120.2
392.37	3.92	56.91	-18	-0.4	2823.2	28.23	409.46	50	122
407.13	4.07	59.05	-17	1.4	2889.3	28.89	419.04	51	123.8

Manufacturer reserves the right to change, at any time, specifications and designs without notice and without obligations.

System Pressure Table-R454B (Continued)

Pressure			Temperature		Pressure			Temperature	
Kpa	bar	PSI	°C	°F	Kpa	bar	PSI	°C	°F
422.31	4.22	61.25	-16	3.2	2956.5	29.57	428.79	52	125.6
437.92	4.38	63.51	-15	5	3025	30.25	438.72	53	127.4
453.98	4.54	65.84	-14	6.8	3094.7	30.95	448.83	54	129.2
470.47	4.70	68.23	-13	8.6	3165.7	31.66	459.13	55	131
487.43	4.87	70.69	-12	10.4	3238.1	32.38	469.63	56	132.8
504.84	5.05	73.22	-11	12.2	3311.7	33.12	480.30	57	134.6
522.73	5.23	75.81	-10	14	3386.7	33.87	491.18	58	136.4
541.1	5.41	78.48	-9	15.8	3463	34.63	502.25	59	138.2
559.95	5.60	81.21	-8	17.6	3540.7	35.41	513.52	60	140
579.31	5.79	84.02	-7	19.4	3619.9	36.20	525.00	61	141.8
599.16	5.99	86.90	-6	21.2	3700.5	37.01	536.69	62	143.6
619.54	6.20	89.85	-5	23	3782.7	37.83	548.61	63	145.4
640.43	6.40	92.88	-4	24.8	3866.3	38.66	560.74	64	147.2
661.86	6.62	95.99	-3	26.6	3951.5	39.52	573.10	65	149
683.82	6.84	99.18	-2	28.4	4038.3	40.38	585.69	66	150.8
706.34	7.06	102.44	-1	30.2	4126.8	41.27	598.52	67	152.6
729.41	7.29	105.79	0	32	4217	42.17	611.60	68	154.4
753.06	7.53	109.22	1	33.8	4309	43.09	624.95	69	156.2
777.28	7.77	112.73	2	35.6	4402.9	44.03	638.56	70	158
802.08	8.02	116.33	3	37.4	4498.7	44.99	652.46	71	159.8
827.48	8.27	120.01	4	39.2	4596.5	45.97	666.64	72	161.6
853.49	8.53	123.78	5	41	4696.5	46.97	681.15	73	163.4
880.11	8.80	127.64	6	42.8	4798.9	47.99	696.00	74	165.2
907.35	9.07	131.60	7	44.6	4904.1	49.04	711.25	75	167

Manufacturer reserves the right to change, at any time, specifications and designs without notice and without obligations.

© 2025 Carrier. All rights reserved.
Edition Date: 08/25
Catalog No: **D5CMHA-01SM**

A Proud Member of the Carrier Family
Replaces: New

Manufacturer reserves the right to change, at any time, specifications and designs without notice and without obligations.