D5FSCAH / D5FLCAH

Installation Instructions

Split-Type Four-Way Cassette Indoor Unit Ductless System
Sizes 9K, 12K, 18K, 24K, 36K, 48K

NOTE: Read the entire instruction manual before starting the installation.

TABLE OF CONTENTS

SAFETY CONSIDERATIONS 1
ACCESSORIES 6
DIMENSIONS 7
CLEARANCE 9
PRODUCT INSTALLATION 11
ELECTRICAL DATA 16
CONNECTION DIAGRAMS 16
CAPACITY SETTING 17
DIP SWITCH SETTINGS 17
DRAINPIPE INSTALLATION 18
REFRIGERANT PIPING CONNECTION 19
WIRING PRECAUTIONS 22
INDOOR UNIT WIRING 22
PANEL INSTALLATION 23
TEST RUN 24
PACKING AND UNPACKING THE UNIT 25
TROUBLESHOOTING 26
DUCTLESS START-UP CHECKLIST - Single Zone 27

SAFETY CONSIDERATIONS

Installing, starting up, and servicing air-conditioning equipment can be hazardous due to system pressures, electrical components, and equipment location (roofs, elevated structures, etc.).

Only trained, qualified installers and service mechanics should install, start-up, and service this equipment.

Untrained personnel can perform basic maintenance functions such as coil cleaning. All other operations should be performed by trained service personnel.

When working on the equipment, observe precautions in the literature and on tags, stickers, and labels attached to the equipment.

Follow all safety codes. Wear safety glasses and work gloves. Keep a quenching cloth and fire extinguisher nearby when brazing. Use care in handling, rigging, and setting bulky equipment.

Read these instructions thoroughly and follow all warnings or cautions included in literature and attached to the unit. Consult local building codes and National Electrical Code (NEC) for special requirements. Recognize safety information.

This is the safety-alert symbol ⚠.

When you see this symbol on the unit and in instructions or manuals, be alert to the potential for personal injury. Understand these signal words: **DANGER**, **WARNING**, and **CAUTION**. These words are used with the safety-alert symbol.

DANGER identifies the most serious hazards which will result in severe personal injury or death.

WARNING signifies hazards which could result in personal injury or death.

CAUTION is used to identify unsafe practices which may result in minor personal injury or product and property damage.

NOTE is used to highlight suggestions which will result in enhanced installation, reliability, or operation. The following symbols may be seen on the unit.

Explanation of symbols displayed on the indoor unit or outdoor unit

A2L	WARNING	This symbol shows that this appliance used a flammable refrigerant. If the refrigerant is leaked and exposed to an external ignition source, there is a risk of fire.
	CAUTION	This symbol shows that the operation manual should be read carefully.
	CAUTION	This symbol shows that a service personnel should be handling this equipment with reference to the installation manual.
	CAUTION	
	CAUTION	This symbol shows that information is available such as the operating manual or installation manual.

WARNING

ELECTRICAL SHOCK HAZARD

Failure to follow this warning could result in personal injury or death.

Before installing, modifying, or servicing system, the main electrical disconnect switch must be in the OFF position. There may be more than 1 disconnect switch. Lock out and tag switch with a suitable warning label.

WARNING

EXPLOSION HAZARD

Failure to follow this warning could result in personal injury or death. Before installing, modifying, or servicing system, the main electrical disconnect switch must be in the OFF position. There may be more than 1 disconnect switch. Lock out and tag switch with a suitable warning label.

CAUTION

EQUIPMENT DAMAGE HAZARD

Failure to follow this caution may result in equipment damage or improper operation.

Do not bury more than 36 in. (914 mm) of refrigerant pipe in the ground. If any section of pipe is buried, there must be a 6 in. (152 mm) vertical rise to the valve connections on the outdoor units. If more than the recommended length is buried, refrigerant may migrate to the cooler buried section during extended periods of system shutdown. This causes refrigerant slugging and could possibly damage the compressor at start-up.

WARNING

This appliance is not intended for use by persons (including children) with reduced physical, sensory or mental capabilities, or lack of experience and knowledge, unless they have been given supervision or instruction concerning use of the appliance by a person responsible for their safety. Children should be supervised to ensure that they do not play with the appliance.

WARNING

Only use the specified wire. If the wire is damaged, it must be replaced by the manufacturer, its service agent or similarly qualified persons in order to avoid a hazard. The product must be properly grounded at the time of installation, or electric shock may occur.

For all electrical work, follow all local and national wiring standards, regulations, and the Installation Manual. Connect the cables tightly, and clamp them securely to prevent external forces from damaging the terminal. Improper electrical connections can overheat and cause fire, and may also cause shock. All electrical connections must be made according to the Electrical Connection Diagram located on the panels of the indoor and outdoor units.

All wiring must be properly arranged to ensure that the control board cover can close properly. If the control board cover is not closed properly, it can lead to corrosion and cause the connection points on the terminal to heat up, catch fire, or cause electrical shock.

Disconnection must be incorporated in the fixed wiring in accordance with NEC, CSA, and Local Codes. Do not share the electrical outlet with other appliances. Improper or insufficient power supply can cause fire or electric shock.

If connecting power to fixed wiring, an all-pole disconnection device which has at least 3mm clearances in all poles, and have a leakage current that may exceed 10mA, the residual current device (RCD) having a rated residual operating current not exceeding 30mA, and disconnection must be incorporated in the fixed wiring in accordance with NEC, CSA, and Local Codes.

⚠ WARNING

Turn of the unit and disconnect the power before performing any installation or repairing. Failure to do so can cause electric shock.

Installation must be performed by an authorized dealer or specialist. Defective installation can cause water leakage, electrical shock, or fire. Installation must be performed according to the installation instructions.

Improper installation can cause water leakage, electrical shock, or fire. Contact an authorized service technician for repair or maintenance of this unit. This appliance shall be installed in accordance with national wiring regulations.

Only use the included accessories, parts, and specified parts for installation. Using non-standard parts can cause water leakage, electrical shock, fire, and can cause the unit to fail.

Install the unit in a firm location that can support the unit's weight. If the chosen location cannot support the unit's weight, or the installation is not done properly, the unit may drop and cause serious injury and damage. Install drainage piping according to the instructions in this manual. Improper drainage may cause water damage to your home and property.

For units that have an auxiliary electric heater, do not install the unit within 3 feet (1 meter) of any combustible materials.

If combustible gas accumulates around the unit, it may cause fire.

Do not turn on the power until all work has been completed.

When moving or relocating the unit, consult experienced service technicians for disconnection and re-installation of the unit.

How to install the appliance to its support, please read the information for details in "indoor unit installation" and "outdoor unit installation" sections.

NOTE: The air conditioner's circuit board (PCB) is designed with a fuse to provide overcurrent protection. The specifications of the fuse are printed on the circuit board, for example: T3.15AL/250VAC, T5AL/250VAC, T3.15A/ 250VAC, T5A/ 250VAC, T20A/250VAC, T30A/250VAC,etc.

NOTE: Only the blast-proof ceramic fuse can be used.

⚠ WARNING

FOR FLAMMABLE REFRIGERANTS

Do not use means to accelerate the defrosting process or to clean, other than those recommended by the manufacturer.

The appliance shall be stored in a room without continuously operating ignition sources (for example: open flames, an operating gas appliance or an operating electric heater).

Do not pierce or burn.

Be aware that refrigerants may not contain an odor.

⚠ WARNING

PERSONAL INJURY AND PROPERTY DAMAGE HAZARD

For continued performance, reliability, and safety, the only approved accessories and replacement parts are those specified by the equipment manufacturer. The use of non-manufacturer approved parts and accessories could invalidate the equipment limited warranty and result in fire risk, equipment malfunction, and failure. Review the manufacturer's instructions and replacement parts catalogs available from your equipment supplier.

⚠ WARNING

PERSONAL INJURY AND PROPERTY DAMAGE HAZARD

For continued performance, reliability, and safety, the only approved accessories and replacement parts are those specified by the equipment manufacturer. The use of non-manufacturer approved parts and accessories could invalidate the equipment limited warranty and result in fire risk, equipment malfunction, and failure. Review the manufacturer's instructions and replacement parts catalogs available from your equipment supplier.

R-454B

Refrigerant Safety Group A2L

R-454B

WARNING – Risk of Fire due to Flammable Refrigerant Used. Follow Handling Instructions Carefully in Compliance with National Regulations

NOTE: Risk of Fire. Flammable refrigerant used. To be repaired only by trained service personnel. Do not puncture refrigerant tubing.

1. **Installation (where refrigerant pipes are allowed)**

Any person who is involved with working on or breaking into a refrigerant circuit should hold a current valid certificate from an industry-accredited assessment authority, which authorizes their competence to handle refrigerants safely in accordance with an industry recognized assessment specification.

Maintenance and repair requiring the assistance of other skilled personnel shall be carried out under the supervision of the person competent in the use of flammable refrigerants.

That the installation of pipe-work shall be kept to a minimum.

That pipe-work shall be protected from physical damage.

Where refrigerant pipes shall be compliance with national gas regulations.

That mechanical connections shall be accessible for maintenance purposes.

Be more careful that foreign matter (oil, water, etc) does not enter the piping. Also, when storing the piping, securely seal the opening by pinching, taping, etc.

All working procedure that effects safety means shall only be carried by competent persons.

Appliance shall be stored in a well ventilated area where the room size corresponds to the room area as specific for operation.

Joints shall be tested with detection equipment with a capability of 1/8 oz (5g)/year of refrigerant or better, with the equipment in standstill and under operation or under a pressure of at least these standstill or operation conditions after installation.

In cases that require mechanical ventilation, ventilation openings shall be kept clear of obstruction.

LEAK DETECTION SYSTEM installed. Unit must be powered except for service. For the unit with refrigerant sensor, when the refrigerant sensor detects refrigerant leakage, the indoor unit will display a error code and emit a buzzing sound, the compressor of outdoor unit will immediately stop, and the indoor fan will start running. The service life of the refrigerant sensor is 15 years. When the refrigerant sensor malfunctions, the indoor unit will display the error code FHCC. The refrigerant sensor can not be repaired and can only be replaced by the manufacture. It shall only be replaced with the sensor specified by the manufacture.

2. **Because a FLAMMABLE REFRIGERANT is used**

The requirements for installation space of appliance and/or ventilation requirements are determined according to:

– the mass charge amount (M) used in the appliance,

–-the installation location,

–-the type of ventilation of the location or of the appliance.

–-piping material, pipe routing, and installation shall include protection from physical damage in operation and service, and be in compliance with national and local codes and standards, such as ASHRAE 15 or CSA B52. All field joints shall be accessible for inspection prior to being covered or enclosed.

–-that protection devices, piping, and fittings shall be protected as far as possible against adverse environmental effects, for example, the danger of water collecting and freezing in relief pipes or the accumulation of dirt and debris;

–-that piping in refrigeration systems shall be so designed and installed to minimize the likelihood of hydraulic shock damaging the system;

–-that steel pipes and components shall be protected against corrosion with a rustproof coating before applying any insulation;

–-that precautions shall be taken to avoid excessive vibration or pulsation;

–-the minimum floor area of the room shall be mentioned in the form of a table or a single figure without reference to a formula;

–-after completion of field piping for split systems, the field pipework shall be pressure tested with an inert gas and then vacuum tested prior to refrigerant charging, according to the following requirements:

a. The required nitrogen pressure is 500 psi

b. The test pressure after removal of pressure source shall be maintained for at least 1 hour with no decrease of pressure indicated by the test gauge, with test gauge resolution not exceeding 5% of the test pressure.

c. During the evacuation test, after achieving a vacuum level specified in the manual or less, the refrigeration system shall be isolated from the vacuum pump and the pressure shall not rise above 1500 microns within 10 min. The vacuum pressure level shall be specified in the manual, and shall be the lessor of 500 microns or the value required for compliance with national and local codes and standards, which may vary between residential, commercial, and industrial buildings.

–Field-made refrigerant joints indoors shall be tightness tested according to the following requirements: The test method shall have a sensitivity of 1/8 oz (5 g) per year of refrigerant or better under a pressure of at least 125% of the maximum allowable pressure. No leak shall be detected.

3. **Qualification of Workers**

Any maintenance, service and repair operations must be performed by skilled and authorized personnel. Every working procedure that effects safety means shall only be carried out by competent persons that joined the training and achieved competence should be documented by a certificate. The training of these procedures is carried out by national training organizations or manufacturers that are accredited to teach the relevant national competency standards that may be set in legislation. Examples for such working procedures are:

- breaking into the refrigerating circuit;
- opening of sealed components;
- opening of ventilated enclosures.

4. **Ventilated area**

Ensure that the area is in the open or that it is adequately ventilated before breaking into the system or conducting any hot work. A degree of ventilation shall continue during the period that the work is carried out. The ventilation should safely disperse any released refrigerant and preferably expel it externally into the atmosphere.

5. **Cabling**

Check that cabling is not subjected to wear, corrosion, excessive pressure, vibration, sharp edges or any other adverse environmental effects. The check shall also take into account the effects of aging or continual vibration from sources such as compressors or fans.

6. **Detection of flammable refrigerants**

Under no circumstances shall potential sources of ignition be used in the searching for or detection of refrigerant leaks. A halide torch (or any other detector using a naked flame) shall not be used.

The following leak detection methods are deemed acceptable for refrigerant systems. Electronic leak detectors that have a sensitivity of 1/8 oz (5g)/year may be used to detect leaks of flammable refrigerants. (Detection equipment shall be calibrated in a refrigerant-free area.) Ensure that the detector is not a potential source of ignition and is suitable for the refrigerant used. Leak detection equipment shall be set at a percentage of the LFL of the refrigerant and shall be calibrated to the refrigerant employed, and the appropriate percentage of gas (25% maximum) is confirmed. Leak detection fluids are also suitable for use in external leak detection.

NOTE Examples of leak detection fluids are:

–- bubble method,

— fluorescent method agents.

If a leak is suspected, all open flames shall be removed/extinguished.

If a leakage of refrigerant is found which requires brazing, all of the refrigerant shall be recovered from the system, or isolated (by means of shut off valves) in a part of the system remote from the leak. See the following instructions of removal of refrigerant.

7. Evacuation

When breaking into the refrigerant circuit to make repairs or for any other purpose, conventional procedures shall be used. However, for flammable refrigerants it is important that best practice be followed, since flammability is a consideration. The following procedure shall be adhered to:

- safely remove refrigerant following local and national regulations; evacuate
- purge the circuit with nitrogen
- evacuate (requirement)
- continuously flush or purge with nitrogen when using flame to open circuit
- open the circuit

The refrigerant charge shall be recovered into the correct recovery cylinders. Charging must be performed by liquid charging method. For appliances containing flammable refrigerants, the system shall be purged with oxygen-free nitrogen to render the appliance safe for flammable refrigerants. This process might need to be repeated several times. Compressed air or oxygen shall not be used for purging refrigerant systems.

For appliances containing flammable refrigerants, refrigerants purging shall be achieved by breaking the vacuum in the system with oxygen-free nitrogen and continuing to fill until the working pressure is achieved, then venting to atmosphere, and finally pulling down to a vacuum (requirement). This process shall be repeated until no refrigerant is within the system (requirement). When the final oxygen-free nitrogen charge is used, the system shall be vented down to atmospheric pressure to enable work to take place. The outlet for the vacuum pump shall not be close to any potential ignition sources, and ventilation shall be available.

Recovery: When removing refrigerant from a system, either for servicing or decommissioning, it is recommended good practice that all refrigerants are removed safely.

When transferring refrigerant into cylinders, ensure that only appropriate refrigerant recovery cylinders are employed. Ensure that the correct number of cylinders for holding the total system charge is available. All cylinders to be used are designated.

8. Charging procedures

In addition to conventional charging procedures, the following requirements shall be followed:

- Work shall be undertaken with appropriate tools only (In case of uncertainty, please consult the manufacturer of the tools for use with flammable refrigerants).
- Ensure that contamination of different refrigerants does not occur when using charging equipment. Hoses or lines shall be as short as possible to minimize the amount of refrigerant contained in them.
- Charging must be performed by liquid charging method.
- Ensure that the refrigeration system is grounded prior to charging the system with refrigerant.
- Label the system when charging is complete (if not already).
- Extreme care shall be taken not to overfill the refrigeration system.
- Prior to recharging the system it shall be pressure tested with oxygen free nitrogen (OFN). The system shall be leak tested on completion of charging but prior to commissioning. A follow up leak test shall be carried out prior to leaving the site.

Manufacturer reserves the right to change, at any time, specifications and designs without notice and without obligations.

ACCESSORIES

The unit system comes with the following accessories. Use all of the installation parts and accessories to install the unit. Improper installation may result in water leakage, electrical shock and fire, or cause the equipment to fail. The items are not included with the unit must be purchased separately.

Table 1 — Accessories

Name of Accessory	Quantity	Image
Manual	2	
Soundproof/insulation sheath	1	
Soundproof/insulation sheath	1	
Outlet pipe sheath	1	
Wire tie	6	
Remote controller	1	
Magnetic ring (9K/12K/18K)	2	
Wireless module cable	1	
Remote controller holder	1	
Drain joint	1	
Seal ring	1	
Brass nut	2	
Tapping screw	6	
Drain clamp	2	
Conduit installation plate	1	
Batteries	2	
Rubber block (24K/36K/48K)	1	

Optional Accessories

There are two types of remote controls: wired and wireless.

Select a remote controller based on customer preferences and requirements and install in an appropriate place.

Refer to catalogs and technical literature for guidance on selecting a suitable remote controller.

Table 2 — Pipe Specification

Name	Model	Liquid Side	Gas Side	Remarks
Connecting Pipe Assembly	9K	Φ1/4 in (Φ6.35mm)	Φ3/8 in (Φ9.52mm)	Pipes are not included in the accessories. They must be purchased separately from the local dealer.
	12K	Φ1/4 in (Φ6.35mm)	Φ3/8 in (Φ9.52mm)	
	18K	Φ1/4 in (Φ6.35mm)	Φ1/2 in (Φ12.7mm)	
	24K	Φ3/8 in (Φ9.52mm)	Φ5/8 in (Φ16mm)	
	36K	Φ3/8 in (Φ9.52mm)	Φ3/4 in (Φ19mm)	
	48K	Φ3/8 in (Φ9.52mm)	Φ3/4 in (Φ19mm)	

NOTE: Panel installation should be performed after wiring and piping have been completed.

Table 3 — Model Numbers

TONS	BTUH	VOLTAGE	MODEL #
0.75/1.00	9/12	208/230V	D5FSCAH12XAK
1.50	18	208/230V	D5FSCAH18XAK
2	24	208/230V	D5FSCAH24XAK
3	36	208/230V	D5FSCAH36XAK
4	48	208/230V	D5FSCAH48XAK

Table 4 — Required Accessories

Model	Description
45MBCQ01XXX3	Cassette panel for units 09–18
45MBCQ02XXX4	Cassette panel for units 24–48

Manufacturer reserves the right to change, at any time, specifications and designs without notice and without obligations.

DIMENSIONS

Table 5 — Dimensions Indoor

System Size		12K	18K	24K	36K	48K
		(208/230 V)	(208/230 V)	(208/230 V)	(208/230 V)	(208/230 V)
Height (H)	in (mm)	9.65(245)	9.65(245)	8.07(205)	9.65(245)	11.30(287)
Width (W)	in (mm)	22.44(570)	22.44(570)	32.68(830)	32.68(830)	32.68(830)
Depth (D)	in (mm)	22.44(570)	22.44(570)	32.68(830)	32.68(830)	32.68(830)
Weight -Net	lbs. (kg)	35.27(16)	35.27(16)	47.18(21.4)	59.30(26.9)	64.59(29.3)
Packaging						
Height	in (mm)	11.61(295)	11.61(295)	9.84(250)	11.42(290)	12.99(330)
Width	in (mm)	28.15(715)	28.15(715)	35.83(910)	35.83(910)	35.83(910)
Depth	in (mm)	25.20(640)	25.20(640)	35.83(910)	35.83(910)	35.83(910)
Weight-Gross	lbs. (kg)	41.89(19)	41.89(19)	59.08(26.8)	71.43(32.4)	76.06(34.5)
Carton Drawing No.	--	ZXW-700*625*280S-NS	ZXW-700*625*280S-NS	ZX-895*895*235S-NS1	ZX-895*895*275S-NS1	ZX-895*895*315S-NS1
Carton Material	--	Double corrugated cardboard				
Material Thickness	in (mm)	0.295(7.5)	0.295(7.5)	0.295(7.5)	0.295(7.5)	0.295(7.5)

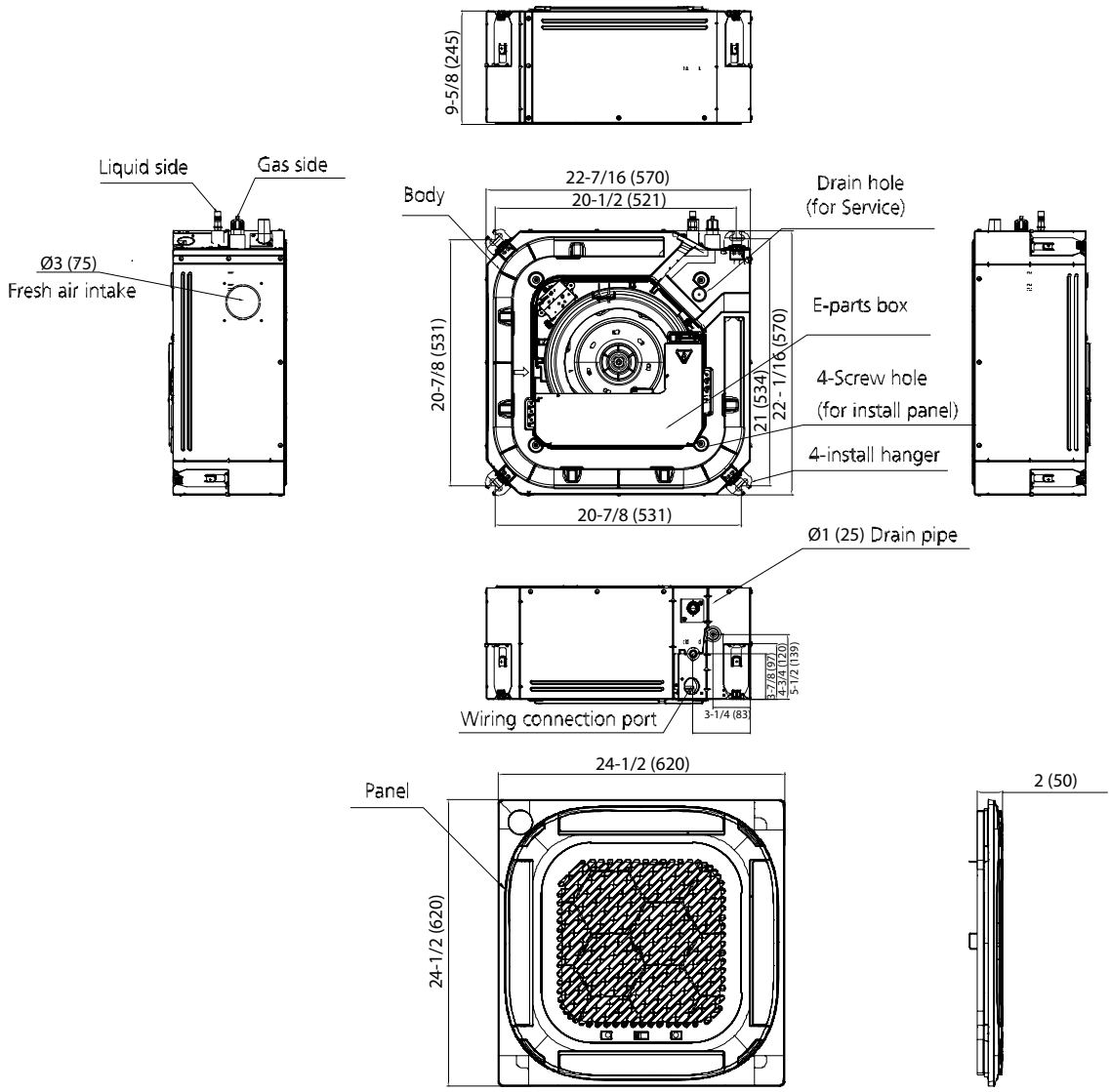

Fig. 1 —Indoor Unit (Sizes 12-18K)

DIMENSIONS (CONT.)

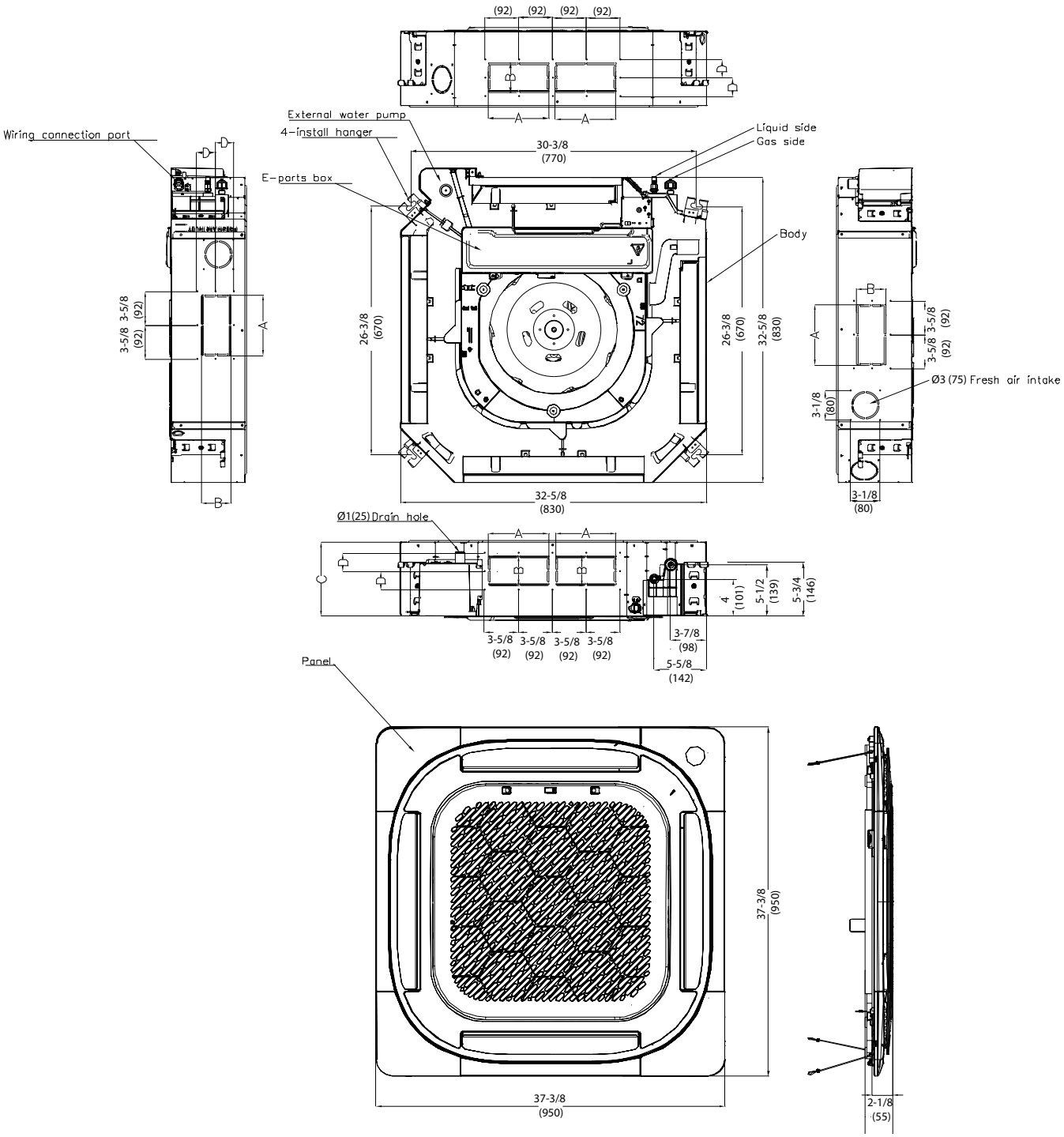

Fig. 2 — Indoor Unit (Sizes 24K,36K,48K)

Table 6 — Models

Model (KBtu/h)	Unit	A	B	C	D
24	inches	6-1/2	3-1/8	8	2
	mm	165	80	205	50
36	inches	6-1/2	3-7/8	9-5/8	2-1/4
	mm	165	100	245	60
48	inches	6-1/2	3-7/8	11-1/4	2-1/4
	mm	165	100	287	60

CLEARANCE

The distance between the mounted indoor unit and the internal ceiling should meet the following specifications.

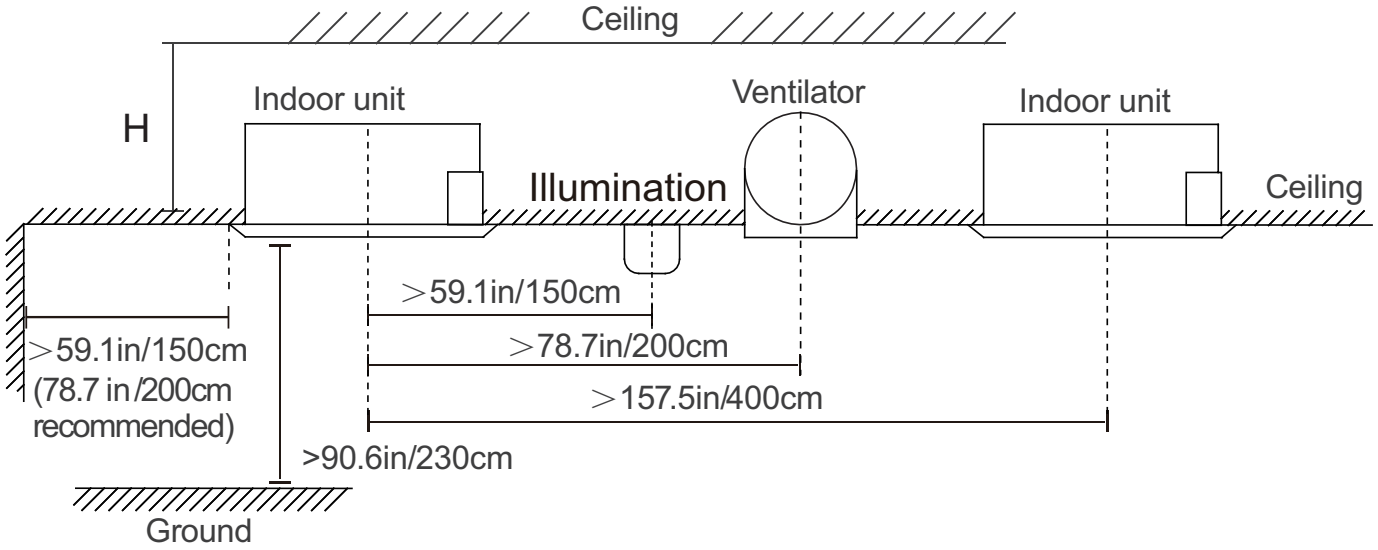

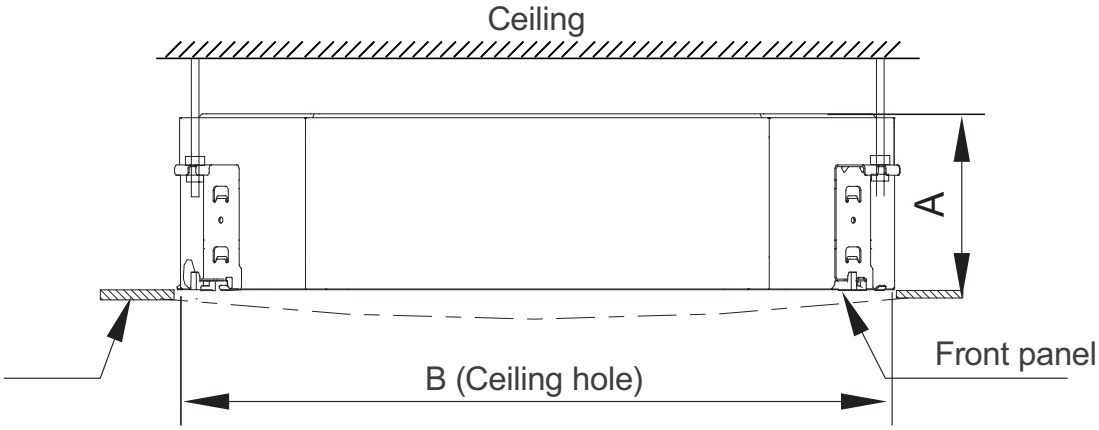

Fig. 3 —Recommended Distance Between Indoor Unit and Ceiling

Table 7 — Distance from Ceiling Relative to Height of Indoor Unit

Model	Length of A	Length of H	Length of B
9K/12K/18K	9.6in (245mm)	>10.8in (275mm	26.3in (600mm)
24K	8.03in (205mm)	9.06in (230mm)	35.4in (900mm)
36K	9.65in (245mm)	10.7in (271mm)	
48K	11.3in (287mm	12.3in (313mm)	

For R-454B Refrigerant Charge Amount and Minimum Room Area:

The unit you purchased may be one of the types in the table below. The indoor and outdoor units are designed to be used together. Please check the unit you purchased: The indoor unit should be installed at least 7.6 feet / 2.3 meters above the floor; the height of the room cannot be less than 7.3 feet / 2.2 meters; and the minimum room area of operating or storage should be specified in Table 3.

Table 8 — A (min)

hinst: Height Above Floor Level to Center of Indoor Unit / feet (meters							
MC or Mrel Refrigerant Charge Amount pounds (kilograms)		≤ 7.2 (2.2)	7.5 (2.3)	7.9 (2.4)	8.5 (2.6)	9.2 (2.8)	9.8 (3.0)
	≤ 3.91 (1.776)	12 (1.10)					
	4.0 (1.8)	60 (5.53)	57 (5.29)	55 (5.07)	50 (4.68)	47 (4.34)	44 (4.05)
	4.4 (2.0)	66 (6.14)	63 (5.88)	61 (5.63)	56 (5.2)	52 (4.83)	48 (4.5)
	4.9 (2.2)	73 (6.76)	70 (6.46)	67 (6.19)	62 (5.72)	57 (5.31)	53 (4.95)
	5.3 (2.4)	79 (7.37)	76 (7.05)	73 (6.76)	67 (6.24)	62 (5.79)	58 (5.41)
	5.7 (2.6)	86 (7.99)	82 (7.64)	79 (7.32)	73 (6.76)	68 (6.27)	63 (5.86)
	6.2 (2.8)	93 (8.6)	89 (8.23)	85 (7.88)	78 (7.28)	73 (6.76)	68 (6.31)
	6.6 (3.0)	99 (9.21)	95 (8.81)	91 (8.45)	84 (7.8)	78 (7.24)	73 (6.76)
	7.1 (3.2)	106 (9.83)	101 (9.4)	97 (9.01)	90 (8.32)	83 (7.72)	78 (7.21)
	7.5 (3.4)	112 (10.44)	108 (9.99)	103 (9.57)	95 (8.84)	88 (8.2)	82 (7.66)
	7.9 (3.6)	119 (11.06)	114 (10.58)	109 (10.14)	101 (9.36)	94 (8.69)	87 (8.11)
	8.4 (3.8)	126 (11.67)	120 (11.16)	115 (10.7)	106 (9.88)	99 (9.17)	92 (8.56)
	8.8 (4.0)	132 (12.29)	126 (11.75)	121 (11.26)	112 (10.4)	104 (9.65)	97 (9.01)
	9.3 (4.2)	139 (12.9)	133 (12.34)	127 (11.82)	117 (10.91)	109 (10.14)	102 (9.46)
	9.7 (4.4)	145 (13.51)	139 (12.93)	133 (12.39)	123 (11.43)	114 (10.62)	107 (9.91)
	10.1 (4.6)	152 (14.13)	145 (13.51)	139 (12.95)	129 (11.95)	119 (11.1)	112 (10.36)
	10.6 (4.8)	159 (14.74)	152 (14.1)	145 (13.51)	134 (12.47)	125 (11.58)	116 (10.81)
	11.0 (5.0)	165 (15.36)	158 (14.69)	152 (14.08)	140 (12.99)	130 (12.07)	121 (11.26)

A-min: Required Minimum Room Area / Square Feet (Square Meters)

AREA FORMULA

Amin is the required minimum room area in ft^2 /m^2
mc is the actual refrigerant charge in the system in ft/kg
mREL is the refrigerant releasable charge in ft/kg
hinst is the height of the center of the appliance relative to the floor of the room after installation.
WARNING: The minimum room area or minimum room area of conditioned space is based on releasable charge or total system refrigerant charge.

AIRFLOW INFORMATION

When the unit detects a refrigerant leak, the minimum airflow of the indoor unit is as follows (applicable to the units with refrigerant sensors only):

Table 9 — Airflow

MODEL	9K	12K	18K	24K	36K	48K
NOMINAL AIR VOLUME CFM (M^3/H)	353 (600)	418 (710)	448 (760)	765 (1300)	1042 (1770)	1236 (2100)

PRODUCT INSTALLATION

PRODUCT OVERVIEW

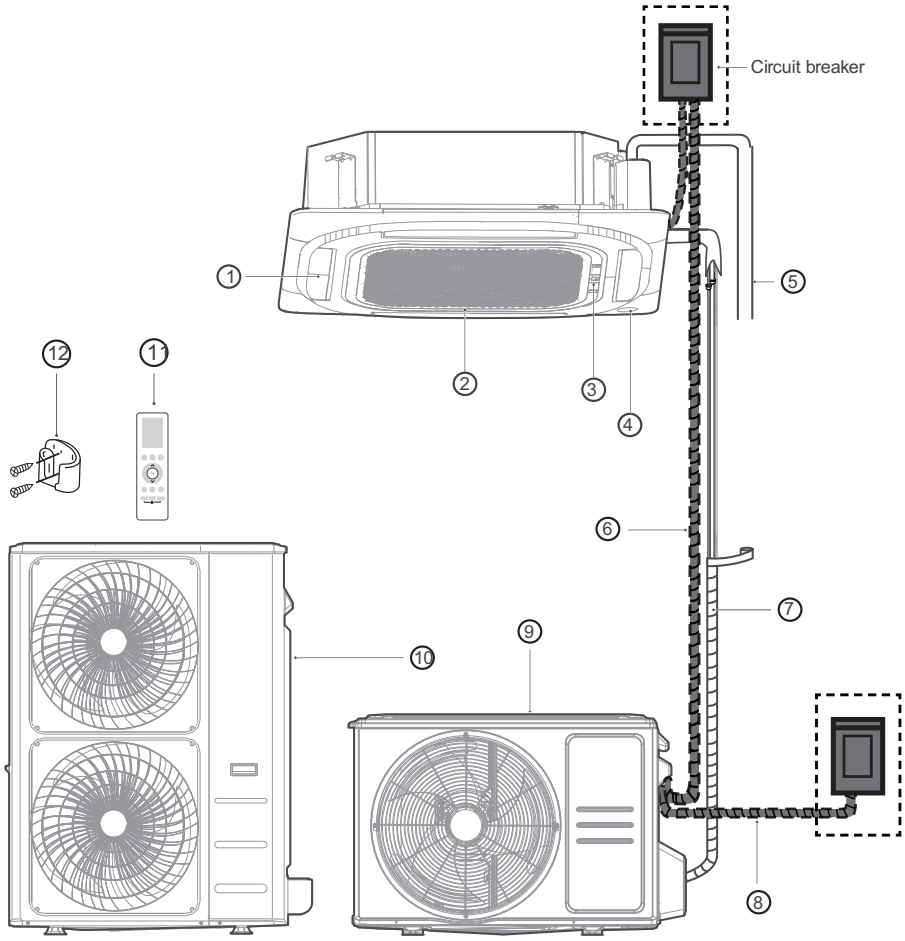

1	Air outlet
2	Air inlet
3	Front grille
4	Display panel
5	Drain pipe (purchase separately)
6	Connection cable (purchase separately)
7	Refrigerant piping (purchase separately)
8	Outdoor unit power cable (purchase separately)
9	Outdoor unit (A)
10	Outdoor unit (B)
11	Remote controller
12	Remote controller holder (purchase separately)

Fig. 4 —System Breakdown with Callouts

INDOOR UNIT INSTALLATION

1. Select Installation Location

NOTE: Before installing the indoor unit, refer to the label on the product box to make sure that the model number of the indoor unit matches the model number of the outdoor unit.
When installing optional accessories, review the optional accessories list in the installation manual. Depending on field conditions, it may be easier to install optional accessories before the indoor unit is installed (except for the decoration panel). However, for an existing ceiling, install the fresh air inlet component kit (field Supplied) before installing the unit.

Panel installation should be performed after piping and wiring have been completed.

Proper Installation Locations Must Meet the Following Standards

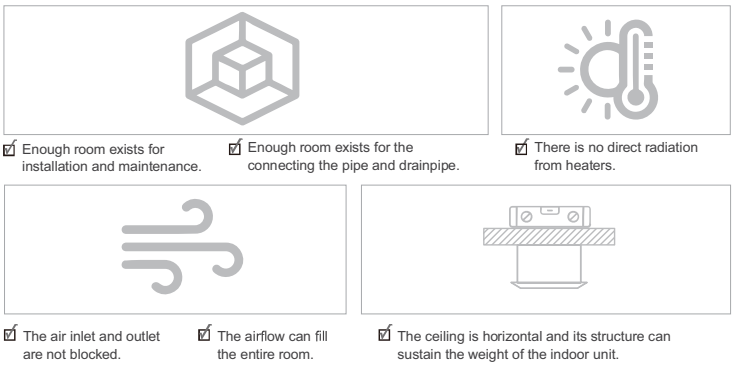

Fig. 5 —Standards for Indoor Unit Installation

<u>DO NOT install unit in the following locations</u>

- Areas with oil drilling or fracking
- Coastal areas with high salt content in the air
- Areas with caustic gases in the air, such as hot springs
- Areas that experience power fluctuations, such as factories
- Enclosed spaces, such as cabinets
- Areas with strong electromagnetic waves
- Areas that store flammable materials or gas
- Rooms with high humidity, such as bathrooms or laundry rooms

2. Confirm various sizes and the recommended distances between the indoor unit and the ceiling. See Fig. 3.

Hang the Indoor Unit

1. Use the included paper template to cut a rectangular hole in the ceiling, leaving at least 39in (1m) on all sides. The cut hole size should be 16in (4cm) larger than the body size. Be sure to mark the areas where ceiling hook holes will be drilled.

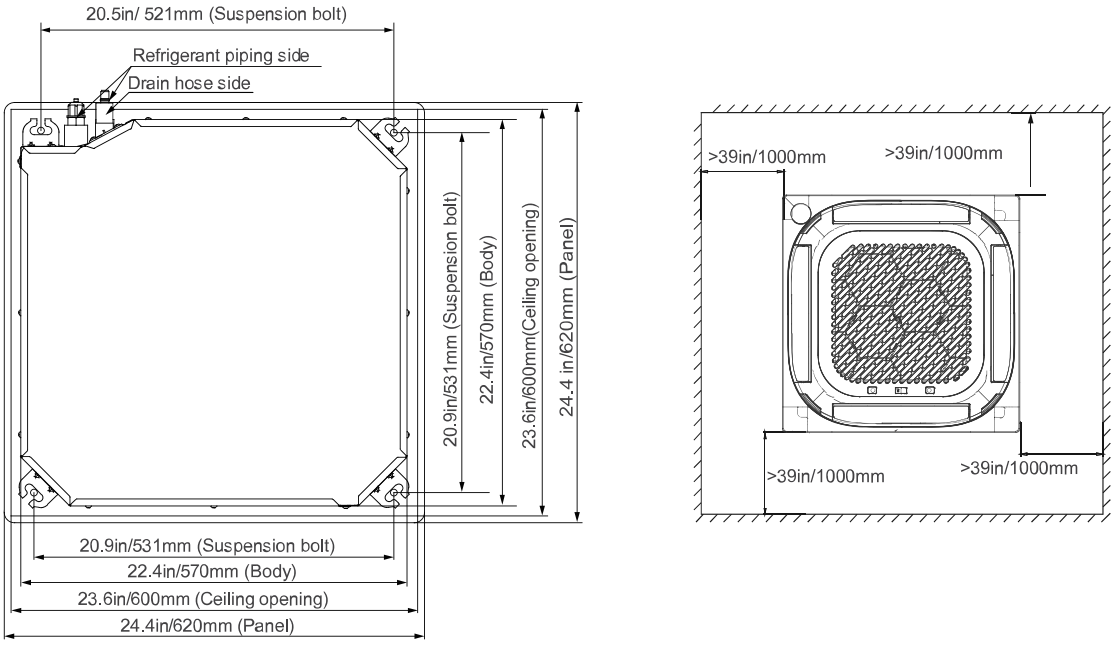

Fig. 6 —Hang Indoor Unit - Models 9K/12K/18K

CAUTION

The unit body should align perfectly with the hole. Ensure that the unit and the hole are the same size before moving on.

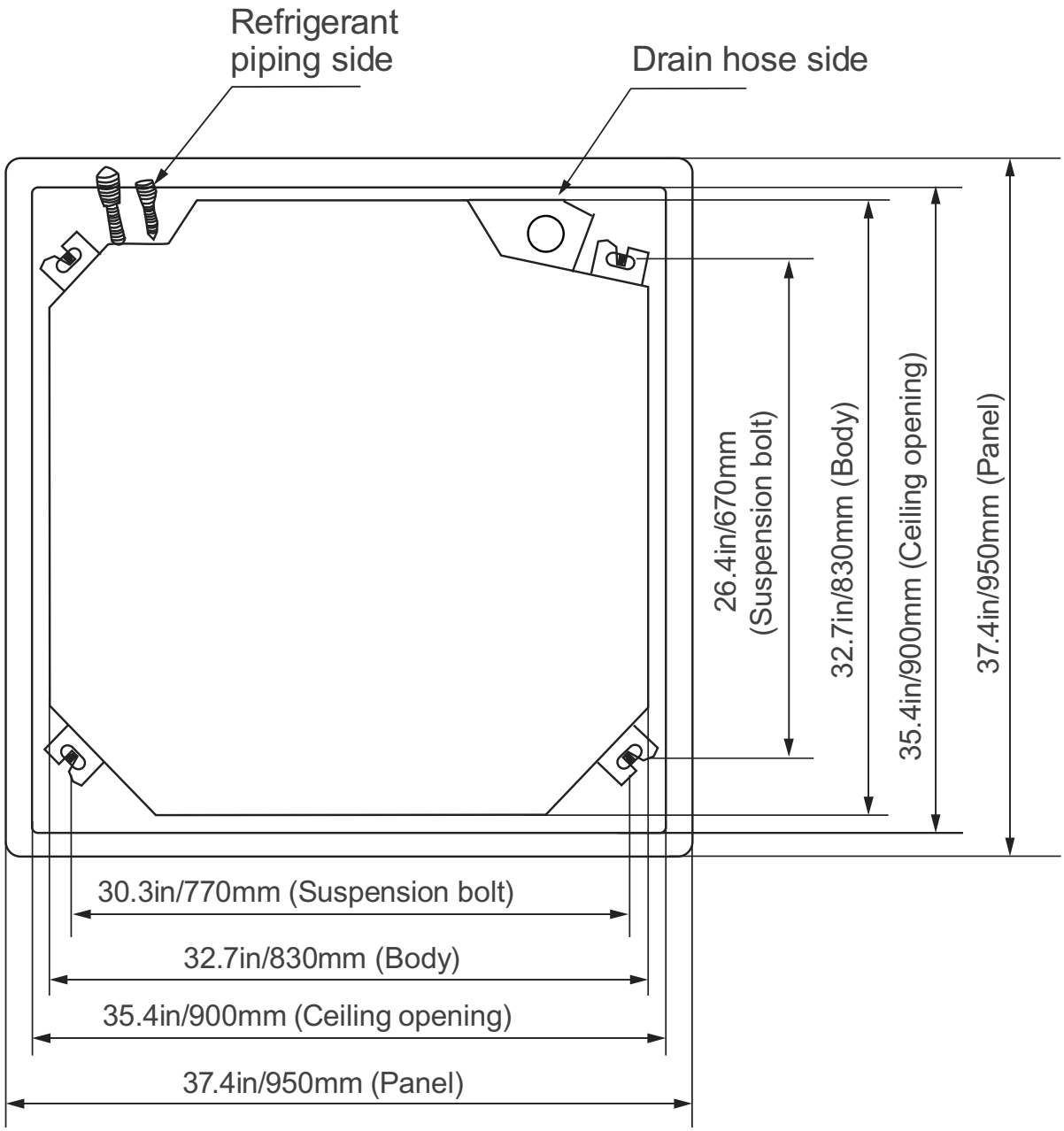

Fig. 7 —Hang Indoor Unit - Models 24K/36K/48K

2. Drill 4 holes 4.7in-6.1in (12cm-15.5cm) deep at the ceiling hook positions in the internal ceiling. Be sure to hold the drill at a 90°angle to the ceiling.
3. Using a hammer, insert the ceiling hooks into the pre-drilled holes. Secure the bolt using the included washers and nuts.

4. Install the four suspension bolts.

Fig. 8 —Install Ceiling Hook and Bolt

5. Mount the indoor unit. You will need two people to lift and secure it. Insert suspension bolts into the unit's hanging holes. Fasten them using the included washers and nuts.

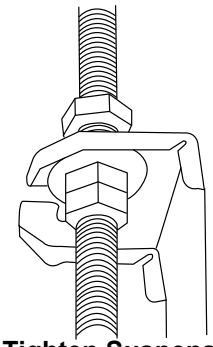

Fig. 9 —Tighten Suspension Bolts

NOTE: The bottom of the unit should be 0.4-0.98in (10-25mm) higher than the ceiling board. Generally, L (indicated in Figure 10) should be half the length of the suspension bolt or long enough to prevent the nuts from coming off.

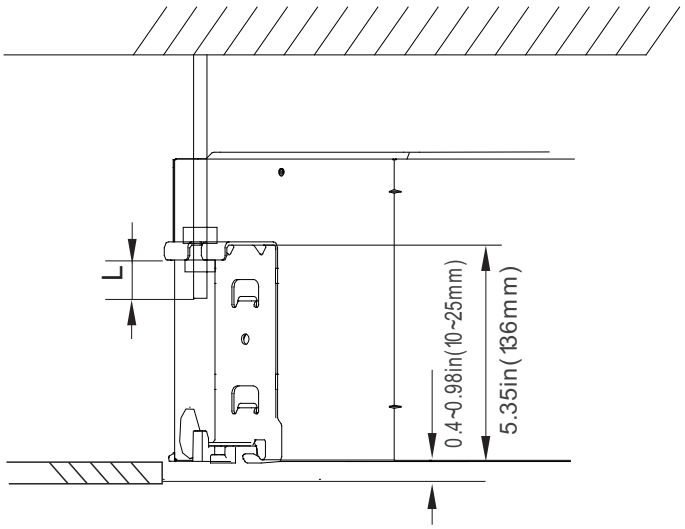

Fig. 10 —Mount the Indoor Unit

CAUTION

Ensure that the unit is completely level. Improper installation can cause the drain pipe to back up into the unit or water leakage.

NOTE: Ensure that the indoor unit is level. The unit is equipped with a built-in drain pump and float switch. If the unit is tilted against the direction of condensate flows (the drainpipe side is raised), the float switch may malfunction and cause water to leak.

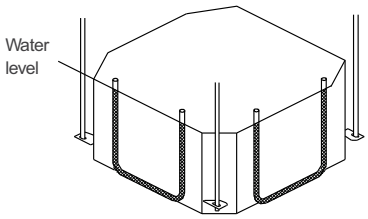

Fig. 11 —Level Unit to Avoid Water Leakage

NOTE FOR NEW HOME INSTALLATION:

When installing the unit in a new home, the ceiling hooks can be embedded in advance. Make sure that the hooks do not come loose due to concrete shrinkage. After installing the indoor unit, fasten the installation paper template onto the unit with bolts to determine in advance the dimension and position of the opening on the ceiling. Follow the instructions above for the remainder of the installation.

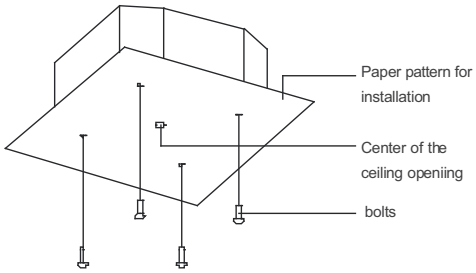

Fig. 12 —New Home Installation

Drill Wall Hole for Connective Piping

1. Determine the location of the wall hole based on the location of the outdoor unit.
2. Drill a hole in the wall, 9K, 12K, 18K model using a 2.56in (65mm) core drill, 24K, 36K, 48K model using a 3.54in (90mm) core drill. Make sure that the hole is drilled at a slight downward angle, so that the outdoor end of the hole is lower than the indoor end by about 0.5in (12mm). This will ensure proper water drainage.
3. Place the protective wall cuff in the hole. This protects the edges of the hole and will help seal it when you finish the installation process.

⚠ CAUTION

When drilling the wall hole, make sure to avoid wires, plumbing, and other sensitive components.

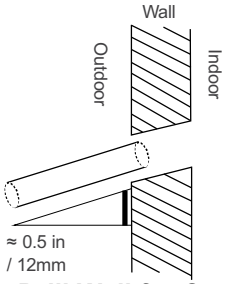

Fig. 13 —Drill Wall for Connective Piping

Connect Drain Hose

The drainpipe is used to drain water away from the unit. Improper installation may cause unit and property damage.

⚠ CAUTION

- Insulate all piping to prevent condensation, which could lead to water damage.
- If the drainpipe is bent or installed incorrectly, water may leak and cause a water-level switch malfunction.
- In HEAT mode, the outdoor unit will discharge water. Ensure that the drain hose is placed in an appropriate area to avoid water damage and slippage.
- DO NOT pull the drainpipe forcefully. This could disconnect it.

NOTE ON PURCHASING PIPES

Installation requires a polyethylene tube

(exterior diameter = 1in (25mm)), which can be obtained at your local hardware store or dealer.

ELECTRICAL DATA

UNIT SIZE	OPER. VOLTAGE MAX / MIN*	INDOOR FAN				MAX FUSE CB AMP
		V-PH-HZ	FLA	HP	W	
9/12	253 / 187	208--230/1/60	0.146	0.061	46	Refer to outdoor unit installation instructions — Indoor unit powered by the outdoor unit
18			0.146	0.061	46	
24			0.332	0.057	58	
36			0.8	0.169	1421	
48			1.6	0.231	232	

*Permissible limits of the voltage range at which the unit will operate satisfactorily.

LEGEND

FLA - Full Load Amps

CONNECTION DIAGRAMS

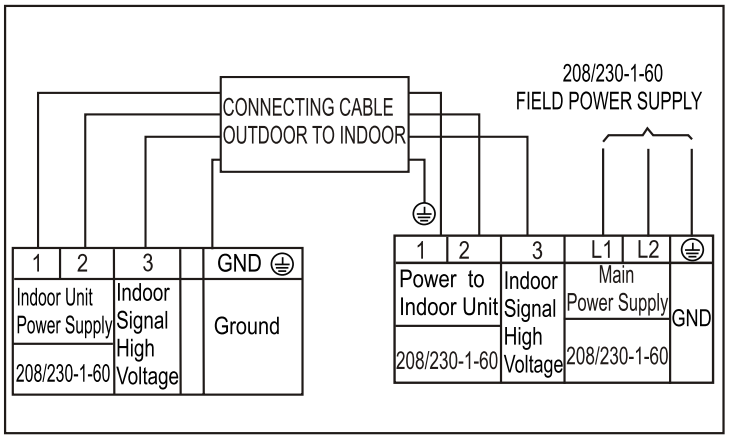

Fig. 14 — Connection Diagrams (Sizes 12−24)

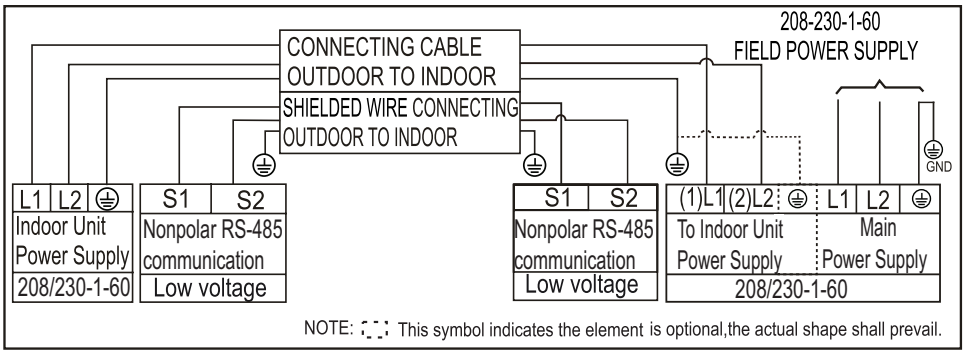

Fig. 15 — Connection Diagram (Size 36)

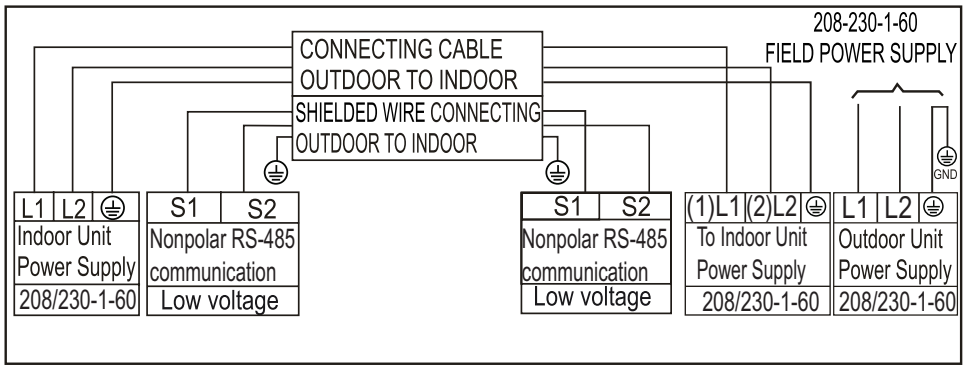

Fig. 16 — Connection Diagrams (Size 48)

NOTES:

1. **Do not use the thermostat wire for any connection between indoor and outdoor units.**

2. **All connections between the indoor and outdoor units must be as shown. The connections are sensitive to polarity and will result in a fault code.**

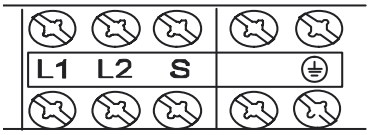

Fig. 17 —Control and Power Wiring on Indoor Unit

CAPACITY SETTING

12K to 9K Setting

The default capacity of 45MBCAQ12XA3 is 12K BTUH, to downsize it to a 9K model.

1. The default ENC1 setting for 12K unit is 0.

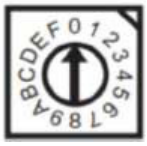

2. Disconnect the power first.
3. Open the electronic control box, change ENC1 to 2. Then close the electronic control box.

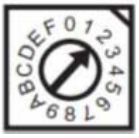

Fig. 18 —Capacity Setting (12K to 9K)

4. Connect the power again, the capacity of the unit has changed to 9K.

DIP SWITCH SETTINGS

No.	DIAL CODE	FUNCTION	ON	OFF	1 ON AND 2 OFF	1 ON AND 2 ON	1 OFF AND 2 ON	1 OFF AND 2 OFF
1	S1+Rotary Switch S2	Central control address selection	N/A	N/A	S2 + 48	S2 + 16	S2 + 32	S2
2	SW1	Indoor fan stop temperature (TEL0) for normal anti-cold air function in the HEATING mode	N/A	N/A	According to EEROM setting	15°C	8°C	[Default] 24°C
3	SW3	Auto-restart setting	Do not remember the setting status	[Default] Remember the setting status	N/A	N/A	N/A	N/A
4	SAW6	Heating temperature compensation	N/A	N/A	According to EEROM setting	4°C	2°C	[Default] 6°C
5	Rotary Switch ENC1	Capacity selection	[Default] Auto detection: 9K: ENC1=2; 12K:ENC1=0					

NOTE: Capacity selection is applicable for 9K and 12K. All other capacity will be in factory setting.

DRAINPIPE INSTALLATION

1. Install the drainpipe as illustrated in the following Figure.

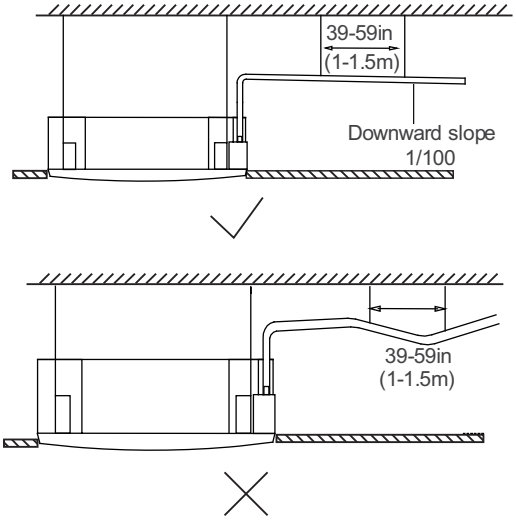

Fig. 19 —Install the Drain Pipe (1)

NOTES ON DRAINPIPE INSTALLATION

- **When using an extended drainpipe, tighten the indoor connection with an additional protection tube to prevent it from pulling loose.**
- **The drainpipe should slope downward at a gradient of at least 1/100 to prevent water from flowing back into the unit.**
- **To prevent the pipe from sagging, space hanging wires every 39-59in (1-1.5m).**
- **If the outlet of the drainpipe is higher than the body's pump joint, provide a lift pipe for the exhaust outlet of the indoor unit. The lift pipe must be installed no higher than 29.5in (75cm) from the ceiling board and the distance between the unit and the lift pipe must be less than 11.8in (30cm). Incorrect installation could cause water to flow back into the unit and flood.**
- **To prevent air bubbles, keep the drain hose level or slightly tiled up (3in/ <75mm).**

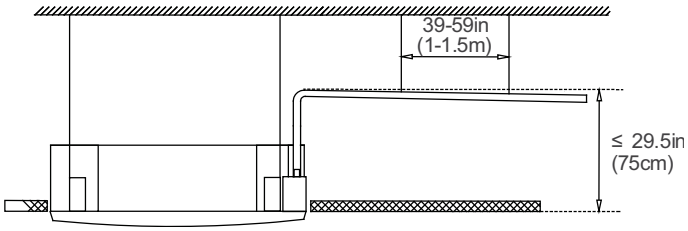

Fig. 20 —Install the Drain Pipe (2)

NOTE: When connecting multiple drainpipes, install the pipes as illustrated in the following Figure.

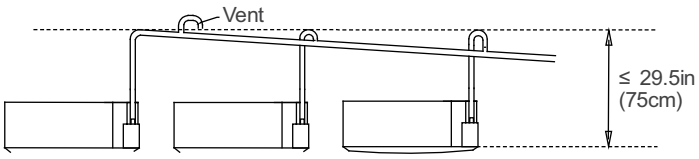

Fig. 21 —Connecting Multiple Drain Pipes

2. Pass the drain hose through the wall hole. Make sure the water drains to a safe location where it will not cause water damage or a slipping hazard.

NOTE: The drainpipe outlet should be at least 1.9in(5cm) above the ground. If it touches the ground, the unit may become blocked and malfunction. If you discharge the water directly into a sewer, make sure that the drain has a U or S pipe to catch odors that might otherwise come back into the house.

How to Install the Conduit Installation Plate (if supplied)

1. Fix the sheath connector (not supplied) on the wire hole of the conduit installation plate.
2. Fix the conduit installation plate on the chassis of the unit.

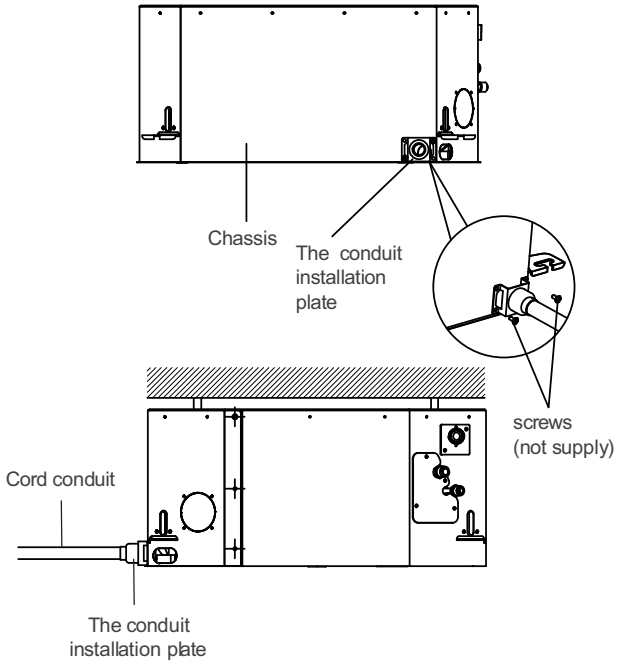

Fig. 22 —Install the Conduit Installation Plate

REFRIGERANT PIPING CONNECTION

When connecting refrigerant piping, DO NOT let substances or gases other than the specified refrigerant enter the unit. The presence of other gases or substances will lower the unit's capacity, and can cause abnormally high pressure in the refrigeration cycle. This can cause explosion and injury.

Notes on Pipe Length and Elevation

Table 10 — Maximum Length and Drop Height

Model	Length of Piping	Maximum drop height
9K/12K	82ft/25m	49.2ft/15m
18K	98.4ft/30m	65.6ft/20m
24K	164ft/50m	82ft/25m
36K/48K	246ft/75m	98.4ft/30m

Ensure that the length of the refrigerant pipe, the number of bends, and the drop height between the indoor and outdoor units meets the requirements shown in the table next to it.

Connection Instructions—Refrigerant Piping

CAUTION

- DO NOT install the connecting pipe until both indoor and outdoor units have been installed.
- Insulate both the gas and liquid piping to prevent condensation.

Step 1: Cut pipes

When preparing refrigerant pipes, take extra care to cut and flare them properly. This will ensure efficient operation and minimize the need for future maintenance.

1. Measure the distance between the indoor and outdoor units.
2. Using a pipe cutter, cut the pipe a little longer than the measured distance.
3. Make sure that the pipe is cut at a perfect 90° angle.

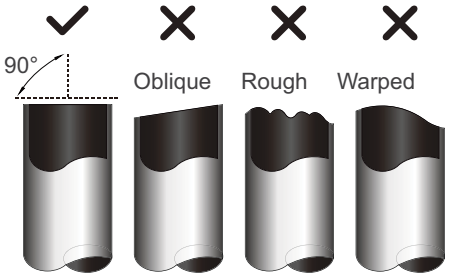

Fig. 23 —Cut Pipes

CAUTION

DO NOT DEFORM PIPE WHILE CUTTING

Be extra careful not to damage, dent, or deform the pipe while cutting. This will drastically reduce the heating

Step 2: Remove burrs

Burrs can affect the air-tight seal of refrigerant piping connection. They must be completely removed.

1. Hold the pipe at a downward angle to prevent burrs from falling into the pipe.
2. Using a reamer or deburring tool, remove all burrs from the cut section of the pipe.

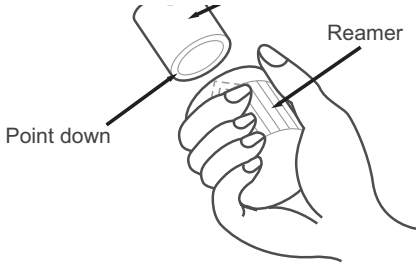

Fig. 24 —Remove Burrs

Step 3: Flare pipe ends

Proper flaring is essential to achieve an airtight seal.

1. After removing burrs from cut pipe, seal the ends with PVC tape to prevent foreign materials from entering the pipe.
2. Sheath the pipe with insulating material.
3. Place flare nuts on both ends of pipe. Make sure they are facing in the right direction, because you cannot put them on or change their direction after flaring.

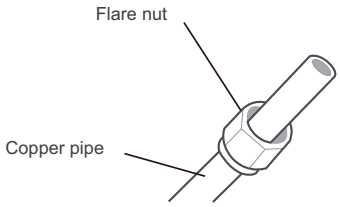

Fig. 25 —Place Flare Nuts on Pipe

4. Remove PVC tape from ends of pipe when ready to perform flaring work.
5. Clamp flare from on the end of the pipe. The end of the pipe must extend beyond the flare form.

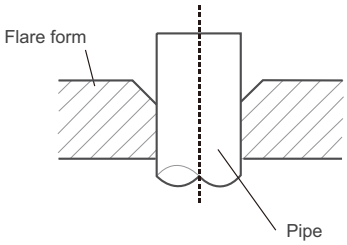

Fig. 26 —Clamp Flare

6. Place flaring tool onto the form.
7. Turn the handle of the flaring tool clockwise until the pipe is fully flared.

Table 11 — Piping Extension Beyond Flare Form

Pipe Gauge	Tightening Torque	Flare Dimension (A)	Flare Shape
Ø1/4” (Ø6.35MM)	13.25 -14.75 ft-lbs (18 - 20 N.m)	0.33~0.34" (8.4~8.7mm)	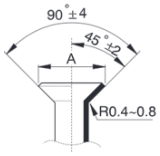
Ø3/8” (Ø9.52MM)	23.6 - 28.75 ft-lbs (32 - 39 N.m)	0.52~0.53" (13.2~13.5mm)	
Ø1/2” (Ø12.7MM)	36 - 43.5 ft-lbs (49 - 59 N.m)	0.64~0.65" (16.2~16.5mm)	
Φ5/8in (Φ16mm)	42 - 52.4 (57 - 71 N.m)	0.76~0.78in (19.2~19.7mm)	
Φ3/4in (Φ19mm)	49.4 - 74.5 (67-101 N.m)	0.91~0.93in (23.2~23.7mm)	

8. Remove the flaring tool and flare form, then inspect the end of the pipe for cracks and even flaring.

Step 4: Connect pipes

Connect the copper pipes to the indoor unit first, then connect it to the outdoor unit. You should first connect the low-pressure pipe, then the high pressure pipe.

1. When connecting the flare nuts, apply a thin coat of refrigeration oil to the flared ends of the pipes.
2. Align the center of the two pipes that you will connect.

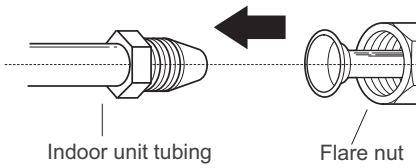

Fig. 27 —Align Center of Pipes

3. Tighten the flare nut snugly by hand.
4. Using a wrench, grip the nut on the unit tubing.
5. While firmly gripping the nut, use a torque wrench to tighten the flare nut according to the torque values in above table.

NOTE: Use both a spanner and a torque wrench when connecting or disconnecting pipes to/from the unit.

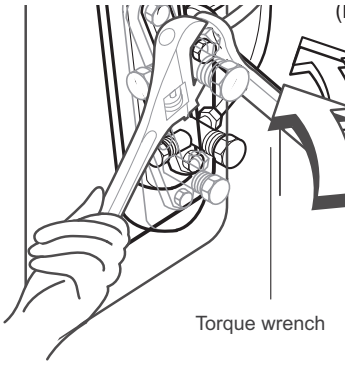

Fig. 28 —Connect Pipes to/from Unit

CAUTION

Ensure to wrap insulation around the piping. Direct contact with the bare piping may result in burns or frostbite.

Make sure the pipe is properly connected. Over tightening may damage the bell mouth and under tightening may lead to leakage.

6. Bend the tubing.

NOTE: Carefully bend the tubing in the middle according to the diagram below.

DO NOT bend the tubing more than 90° or more than 3 times.

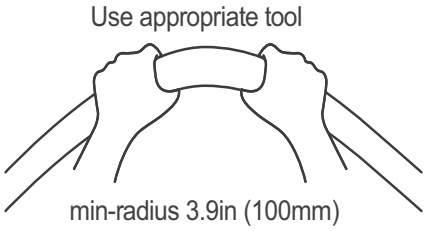

Fig. 29 —Bend the Tubing

7. After connecting the copper pipes to the indoor unit, wrap the power cable, signal cable and the piping together with binding tape.

NOTE: DO NOT intertwine signal cable with other wires. While bundling these items together.

DO NOT intertwine or cross the signal cable with any other wiring.

WIRING PRECAUTIONS

⚠ WARNING

BEFORE PERFORMING ANY ELECTRICAL WORK, READ THE FOLLOWING WARNINGS.

• All wiring must comply with local and national electrical codes, regulations and must be installed by a licensed electrician.

• All electrical connections must be made according to the Electrical Connection Diagram located on the panels of the indoor and outdoor units.

• If there is a serious safety issue with the power supply, stop work immediately. Explain your reasoning to the client, and refuse to install the unit until the safety issue is properly resolved.

• Power voltage should be within 90-110% of rated voltage. Insufficient power supply can cause malfunction, electrical shock, or fire.

• Installation of an external surge suppressor at the outdoor disconnect is recommended.

• If connecting power to fixed wiring, a switch or circuit breaker that disconnects all poles and has a contact separation of at least 1/8in (3mm) must be incorporated in the fixed wiring. The qualified technician must use an approved circuit breaker or switch.

• Only connect the unit to an individual branch circuit. Do not connect another appliance to that outlet.

• Make sure to properly ground the unit.

• Every wire must be firmly connected. Loose wiring can cause the terminal to overheat, resulting in product malfunction and possible fire.

• Do not let wires touch or rest against refrigerant tubing, the compressor, or any moving parts within the unit.

• If the unit has an auxiliary electric heater, it must be installed at least 40in (1 m) away from any combustible materials.

• To avoid getting an electric shock, never touch the electrical components soon after the power supply has been turned Off. After turning off the power, always wait 10 minutes or more before you touch the electrical components.

• Make sure that you do not cross your electrical wiring with your signal wiring. This may cause distortion, interference or possibly damage to circuit boards.

• No other equipment should be connected to the same power circuit.

• Connect the outdoor wires before connecting the indoor wires.

⚠ WARNING

Before performing any electrical or wiring work, turn off the main power to the system.

See Figs. 14 and 16 for Connection Diagrams.

NOTE ON CIRCUIT BREAKER: The unit should be wired according to NEC and CEC requirements.

INDOOR UNIT WIRING

1. Prepare the cable for connection
   a. Using wire strippers, strip the rubber jacket from both ends of the signal cable to reveal about 5.9in (15cm) of the wire.
   b. Strip the insulation from the ends of the wires.
   c. Using a wire crimper, crimp the u-lugs to the ends of the wires.
2. Open the front panel of the indoor unit. Using a screw driver, remove the cover of the electric control box on your indoor unit.
3. Thread the power cable and the signal cable through the wire outlet.
4. Connect the u-lugs to the terminals.

   Match the wire colors/labels with the labels on the terminal block. Firmly screw the u-lug of each wire to its corresponding terminal. Refer to the Serial Number and Wiring Diagram located on the cover of the electric control box.

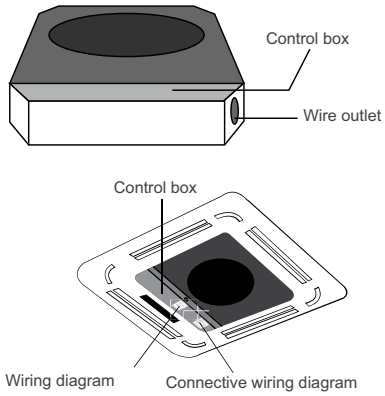

Fig. 30 —Super-Slim Models

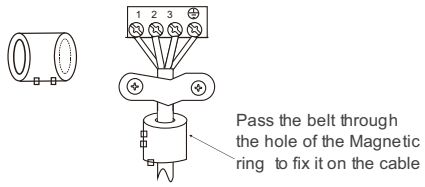

Fig. 31 —Magnetic Ring
(if supplied and packed with the accessories)

NOTE: The actual shape of your unit may be slightly different. The actual shape shall prevail.

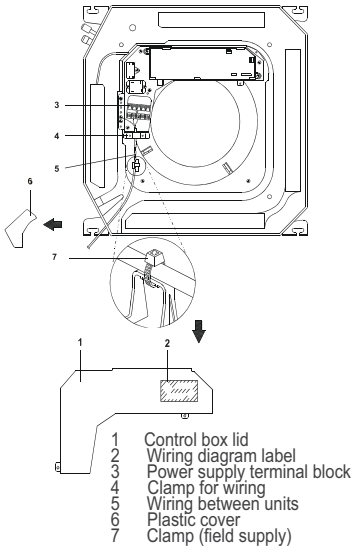

Fig. 32 —Compact Models

⚠ CAUTION

- While connecting the wires, please strictly follow the wiring diagram.
- The refrigerant circuit can become very hot. Keep the interconnection cable away from the copper tube.

5. Clamp down the cable with the cable clamp. The cable must not be loose or pull on the u-lugs.
6. Reattach the electric box cover.

PANEL INSTALLATION

⚠ CAUTION

DO NOT place the panel facedown on the floor, against a wall, or on uneven surfaces.

Step 1: Remove the front grille.

1. Push both of the tabs towards the middle simultaneously to unlock the hook on the grille.

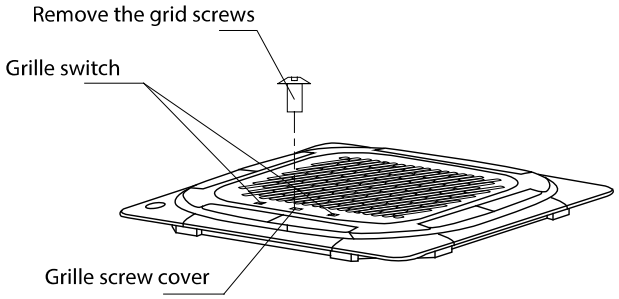

Fig. 33 —Unlock Hooks and Grill

2. Hold the grille at a 45° angle, lift it up slightly and detach it from the main body.

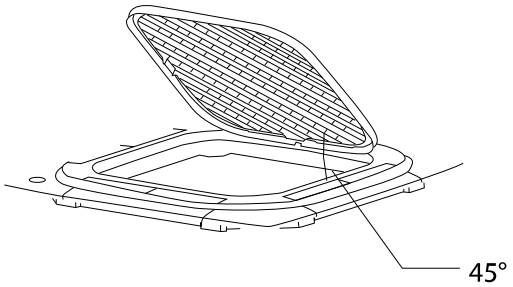

Fig. 34 —Detach Grill from Body

Step 2: The panel hook is pre-hung to the indoor unit flow guide ring, as shown.

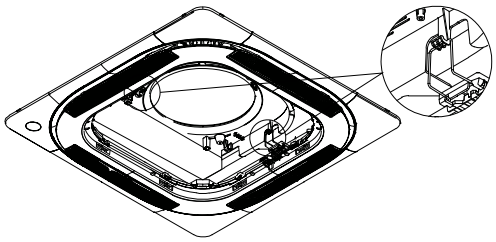

Fig. 35 —Panel Hook

Step 3: Install the panel with four screws (M5), as shown.

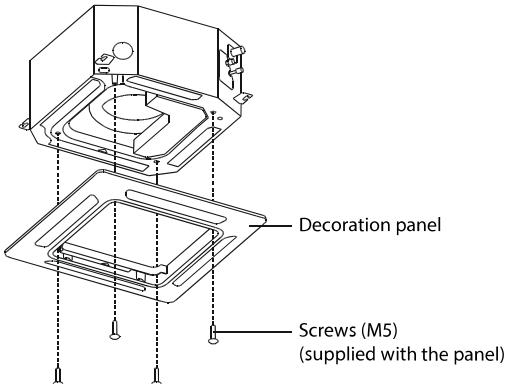

Fig. 36 —Install Panel

NOTE: If the height of the indoor unit needs to be adjusted, you can do so through the openings at the panel's four corners. Make sure that the internal wiring and drainpipe are not affected by this adjustment.

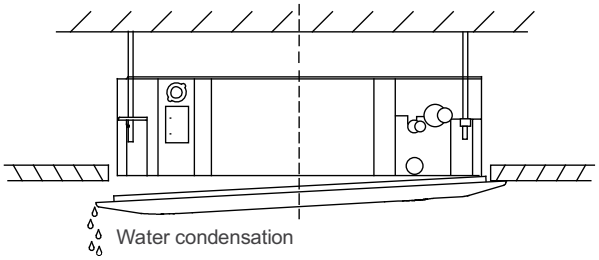

Fig. 37 —Adjust Height of Indoor Unit

⚠ CAUTION

Failure to tighten screws can cause water leakage.

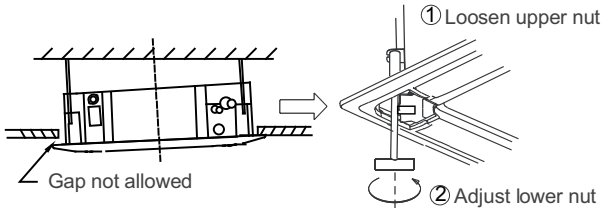

Fig. 38 —Tighten Screws to Avoid Water Leakage

☆

CAUTION

If the unit is not hung correctly and a gap exists, the unit's height must be adjusted to ensure proper function. The unit's height can be adjusted by loosening the upper nut, and adjusting the lower nut.

1. Hang the intake grille on the panel, and then connect the lead connectors of the louver motor and the control box on the panel to the corresponding connectors of the main body.

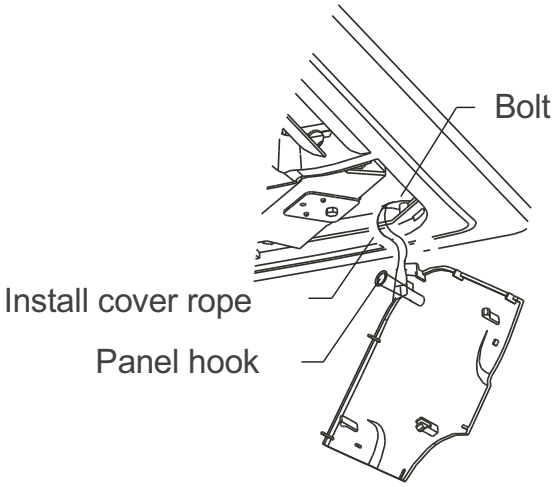

Fig. 39 —Connect Lead Connectors of Louver Motor and Control Box

2. Re-installed into the style grid.
3. Reinstall the installation cover.
4. Fix the installation cover plate rope to the pillar of the installation cover plate, and gently press the installation cover plate into the panel.

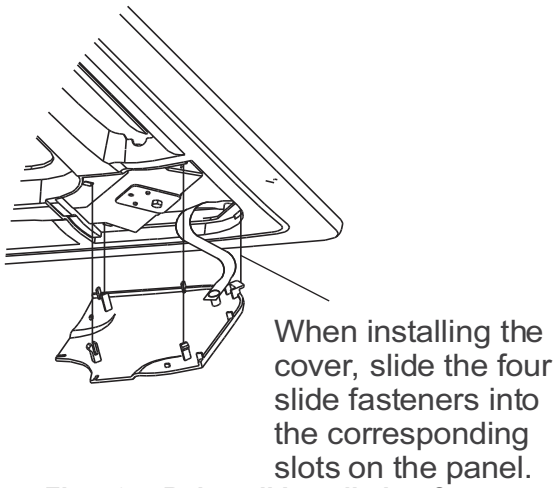

Fig. 40 —Reinstall Installation Cover

NOTE: After installation, the butt plugs of display, swing, water pump and other wire bodies must be placed in the electric control box.

TEST RUN

CAUTION

Failure to perform the test run may result in unit damage, property damage, or personal injury.

Before Test Run

A test run must be performed after the entire system has been completely installed. Confirm the following points before performing the test:

- Indoor and outdoor units are properly installed.
- Piping and wiring are properly connected.
- No obstacles near the inlet and outlet of the unit that might cause poor performance or product malfunction.
- Refrigeration system does not leak.
- Drainage system is unimpeded and draining to a safe location.
- Heating insulation is properly installed.
- Grounding wires are properly connected.
- Length of the piping and additional refrigerant capacity have been recorded.
- Power voltage is the correct voltage for the unit.

Test Run Instructions

1. Open the liquid and gas stop valves.
2. Turn on the main power switch and allow the unit to warm up.
3. Set the unit to COOL mode.
4. For the Indoor Unit:
   a. Ensure the remote control and its buttons work properly.
   b. Ensure the louvers move properly and can be changed using the remote control.
   c. Double check to see if the room temperature is being registered correctly.
   d. Ensure the indicators on the remote control and the display panel on the indoor unit work properly.
   e. Ensure the manual buttons on the indoor unit works properly.
   f. Check to see that the drainage system is unimpeded and draining smoothly.
   g. Ensure there is no vibration or abnormal noise during operation.
5. For the Outdoor Unit:
   a. Check to see if the refrigeration system is leaking.
   b. Make sure there is no vibration or abnormal noise during operation.
   c. Ensure the wind, noise, and water generated by the unit does not disturb your neighbors or pose a safety hazard.
6. Drainage Test
   a. Ensure the drainpipe flows smoothly. New buildings should perform this test before finishing the ceiling.
   b. Remove the test cover. Add 2,000ml of water to the tank through the attached tube.
   c. Turn on the main power switch and run the unit in COOL mode.
   d. Listen to the sound of the drain pump to see if it makes any unusual noises.
   e. Check to see that the water is discharged. It may take up to one minute before the unit begins to drain depending on the drainpipe.
   f. Make sure that there are no leaks in any of the piping.
   g. Stop the unit. Turn off the main power switch and reinstall the test cover.

NOTE: If the unit malfunctions or does not operate according to your expectations, refer to the Troubleshooting section of the Owner's Manual before calling customer service.

PACKING AND UNPACKING THE UNIT

Unpacking Indoor Unit:

1. Cut the packing belt.
2. Unpack the package.
3. Take out the packing cushion and packing support.
4. Remove the packing film.
5. Take out the accessories.
6. Lift the unit and lay it flat.

Unpacking Outdoor Unit:

1. Cut the packing belt.
2. Take the unit out of the package.
3. Remove the foam from the unit.
4. Remove the packing film from the unit.

Packing Indoor Unit:

1. Put the indoor unit into the packing film.
2. Put the accessories in.
3. Place the packing cushion and packing support.
4. Put the indoor unit into the package.
5. Close the package and seal it.
6. Use the packing belt if necessary.

Packing Outdoor Unit:

1. Put the outdoor unit into the packing film.
2. Put the bottom foam into the box.
3. Put the outdoor unit into the package, then put the upper packaging foam on the unit.
4. Close the package and seal it.
5. Use the packing belt if necessary.

NOTE: Keep all packaging items if you may need in the future.

TROUBLESHOOTING

For ease of service, the systems are equipped with diagnostic code display LEDs on both the indoor and outdoor units. The outdoor diagnostic display consists of two LEDs (Red and Green) on the outdoor unit board and is limited to a few errors.

The indoor diagnostic display is a combination of flashing LEDs on the display panel or the front of the unit. If possible, always check the diagnostic codes displayed on the indoor unit first.

The diagnostic codes displayed on the indoor unit are listed in Table 12.

INDOOR UNIT DIAGNOSTIC GUIDES

Table 12 — Error Codes

Display	Malfunction and Protection Indication
EC07	ODU Fan Speed Out of Control
EC51	ODU EEPROM Parameter Error
EC52	ODU Coil Temperature Sensor(T3) error
EC53	ODU Ambient Temperature Sensor (T4) Error
EC54	COMP. Discharge Temperature Sensor (TP) Error
EC56	IDU Coil Temperature Sensor (T2B) Error
ECC1	Other IDU Refrigerant Sensor Detects Leakage (Multi-zone)*
EH00	IDU EEPROM Malfunction
EH03	IDU Fan Speed Out of Control
EH0A	IDU EEPROM Parameter Error
EH0E	Water Level Alarm Malfunction
EH12	Main Unit or Secondary Units Malfunction
EH3A	External Fan DC bus voltage is too low protection
EH3b	External Fan DC bus voltage is too high fault
EH60	IDU Room Temperature (T1) Error
EH61	IDU Coil Temperature Sensor (T2) Error
EHba	Communication Error between the indoor unit and the external fan module
EHC1	Refrigerant Sensor Detects Leakage
EHC2	Refrigerant Sensor is out of range and a leak is detected
EHC3	Refrigerant Sensor is out of range*
EL01	IDU and ODU Communication Error
ELOC	System lacks refrigerant
EL11	Communication Malfunction between the main and secondary units
FH07	IDU lift panel communication failure/IDU opening and closing failure
FHCC	Refrigerant Sensor Error*
PC00	ODU IPM Module Protection
PC01	ODU Voltage Protection
PC02	Compressor To (or IPM Module Protection
PC03	Pressure Protection (Low or High Pressure)
PC04	Inverter Compressor Drive Error
PCOL	Low Ambient Temperate Protection
NOTE: The digital tube will display **FC** in the **FORCED COOLING** mode. **FC is NOT an error code.** *Applicable to the units with refrigerant sensors only.	

Table 13 — Refrigerant Leak Detection Error Codes

EHC1	Refrigerant Sensor detects a leak
EHC2	Working condition of the refrigerant sensor is out of range and a leak is detected

If **you receive one of the codes in Table 13, call a technician as soon as possible. No need to panic, the unit goes into TURBO mode until the error code clears. There is a "beeping" noise coming from the indoor unit, which is normal in this case.**

For additional diagnostic information, refer to the Service Manual..

DUCTLESS START-UP CHECKLIST - Single Zone

Installation Data:

Site Address:_____

City:_____ State:_____ Zip Code:_____

Installing Contractor:_____ Contractor Contact #: ( ) _____-_____

Job Name:_____ Start-up Date:_____

Distributor:_____

System Details

UNITS	MODEL NO.	SERIAL NO.	CONTROLLER
OUTDOOR UNIT			
INDOOR UNIT A			

Are the outdoor unit and indoor unit compatible? YES:_____ NO:_____

Wiring Electrical

Wire Size and Type Used? AWG:_____ TYPE:_____

Are there any breaks, splices, wire nuts or butt connectors between the outdoor unit and the indoor unit? YES:_____ NO:_____

Was the wiring from the outdoor unit port to the correct indoor unit verified? YES:_____ NO:_____

REMARKS:_____

_____

Voltage Check

Wiring: Single Zone

Outdoor Unit Disconnect	1(L1):GND		Outdoor Unit Terminal Block	1(L1):GND		NOTES:_____
	2(L2):GND			2(L2):GND		
	1(L1):L2(2)			1(L1):2(L2)		
Indoor Unit Voltage Check @ Outdoor Unit	1(L1):GND		Indoor Unit Voltage Check @ Indoor Unit	1(L1):GND		NOTES:_____
	2(L2):GND			2(L2):GND		
	1(L1):2(L2)			1(L1):2(L2)		
	2(L2):3(S)			2(L2):3(S)		

Outdoor Unit Disconnect	1(L1):GND		Outdoor Unit Terminal Block	1(L1):GND		NOTES:_____
	2(L2):GND			2(L2):GND		
	1(L1):L2(2)			1(L1):2(L2)		
Indoor Unit Voltage Check @ Outdoor Unit	1(L1):GND		Indoor Unit Voltage Check @ Indoor Unit	1(L1):GND		NOTES:_____
	2(L2):GND			2(L2):GND		
	1(L1):2(L2)			1(L1):2(L2)		
	2(L2):3(S)			2(L2):3(S)		

DUCTLESS START-UP CHECKLIST (CONT)

Piping

Leak Check:

System held 500 psig (max. 550psi) for a minimum of 30 minutes using dry nitrogen. YES:_____ NO:_____

Evacuation Method:

Was the Triple Evacuation Method used as outlined in the installation manual? YES:_____ NO:_____
Was the Deep Vacuum Method used as outlined in the installation manual? YES:_____NO:_____
Did the System Hold 500 microns for 1 hour? YES:_____NO:_____
Does the line set match the diameter of the evaporator connections? YES:_____NO:_____
For Conventional Fan Coils, does the line set match the outdoor unit size? YES:_____NO:_____

Single Zone Piping:

Has the liquid pipe length been measured and the additional charge calculated? Size:_____ Length:_____ Charge:_____

NOTES:

Final Charge Amount MUST be Recorded

PORT	LIQUID SIZE		SUCTION SIZE		LENGTH	CHARGE	NOTES:_____
A							

Performance Check

For 1:1 Single Zone Systems: Adjust the set-point to create an operational call for the desired testing operation. Allow the system to run for a minimum of 10 min. and record the following details:

(Operational data recorded on applicable heads with the wireless remote controller's Point Check function)

UNIT	SET-POINT	MODE	T1	T2	T3	T4	Tb	Tp	Th	LA/Lr
A										

NOTE:

- **T1 - Ambient Space Temperature Sensor**
- **T2 - IDU Coil Temperature Sensor**
- **T3 - Outdoor Coil Temperature Sensor**
- **T4 - Outdoor Ambient Temperature**
- **Tb - Suction Line Temperature @PMV**
- **Tp - Discharge Temperature Sensor**
- **Th - IPM Board Temperature**
- **LA/Lr - PMV Temperature**

Error Codes

Were there any error codes present at start-up? YES:_____ NO:_____

Indoor Unit Error Code:		Notes:
Outoor Unit Error Code:		
Wall Controller:		
24V Interface:		

Comments:

_____
_____
_____

© 2025 Carrier. All rights reserved.
Edition Date: 06/25
Catalog No: D5FSCLCAH-02SI
Replaces: D5FSCLCAH-01SI

Manufacturer reserves the right to change, at any time, specifications and designs without notice and without obligations.