D5FUAAH

Owner's Manual

Crossover Air Handler - Sizes 18 to 60

TABLE OF CONTENTS

PAGE

A NOTE ABOUT SAFETY 2
GENERAL 2
ACCESSORIES 7
INDOOR UNIT PARTS AND MAJOR FUNCTIONS 7
CONTROLS OPTIONS 8
WIRELESS REMOTE CONTROL 9
OPERATION INSTRUCTIONS 15
CARE AND MAINTENANCE 16
TROUBLESHOOTING 18
ERROR CODES 20

NOTE TO EQUIPMENT OWNER:

Please read this Owner's Information Manual carefully before installing and using this appliance and keep this manual for future reference.

For your convenience, please record the model and serial numbers of your new equipment in the spaces provided. This information, along with the installation data and dealer contact information, will be helpful should your system require maintenance or service.

UNIT INFORMATION

Model # _____

Serial # _____

INSTALLATION INFORMATION

Date Installed _____

DEALERSHIP CONTACT INFORMATION

Company Name: _____

Address:_____

Phone Number:_____

Technician Name:_____

Specifications subject to change without notice.

A NOTE ABOUT SAFETY

This is the safety-alert symbol ⚠.

Anytime you see this symbol in manuals, instructions, and on the unit, be aware of the potential for personal injury. There are three levels of precaution:

1. **DANGER** identifies the most serious hazards which will result in severe personal injury or death.
2. **WARNING** signifies hazards which could result in personal injury or death.
3. **CAUTION** is used to identify unsafe practices which may result in minor personal injury or product and property damage.

NOTE is used to highlight suggestions which will result in enhanced installation, reliability, or operation.

⚠ WARNING

PERSONAL INJURY AND PROPERTY DAMAGE HAZARD

For continued performance, reliability, and safety, the only approved accessories and replacement parts are those specified by the equipment manufacturer. The use of non-manufacturer approved parts and accessories could invalidate the equipment limited warranty and result in fire risk, equipment malfunction, and failure.

Review the manufacturer's instructions and replacement parts catalogs available from your equipment supplier.

NOTE: Risk of Fire. Flammable refrigerant used. To be repaired only by trained service personnel. Do not puncture refrigerant tubing.

⚠ WARNING

PERSONAL INJURY, DEATH AND / OR PROPERTY DAMAGE HAZARD

Failure to follow this warning could result in personal injury, death or property damage.

Improper installation, adjustment, alteration, service, maintenance, or use can cause explosion, fire, electrical shock, or other conditions which may cause personal injury or property damage. Consult a qualified installer, service agency, or your distributor or branch for information or assistance. The qualified installer or service agency must use factory-authorized kits or accessories when modifying this product.

Read and follow all instructions and warnings, including labels shipped with or attached to the unit before operating your new air conditioner.

⚠ WARNING

This appliance is not intended for use by persons (including children) with reduced physical, sensory or mental capabilities, or lack of experience and knowledge, unless they have been given supervision or instruction concerning use of the appliance by a person responsible for their safety. Children should be supervised to ensure that they do not play with the appliance.

⚠ WARNING

WARNING FOR USING FLAMMABLE REFRIGERANTS

- Do not use means to accelerate the defrosting process or to clean, other than those recommended by the manufacturer.
- The appliance shall be stored in a room without continuously operating ignition sources (for example: open flames, an operating gas appliance, or an operating electric heater).
- Do not pierce or burn.
- Be aware that refrigerants may not contain an odor.

GENERAL

The indoor unit provides quiet, maximum comfort. In addition to cooling and/or heating, the indoor unit matched with an outdoor condensing unit filters and dehumidifies the air in the room to provide maximum comfort.

IMPORTANT: The indoor unit should be installed by authorized personnel only; using approved tubing and accessories. If technical assistance, service or repair is needed, contact the installer. The indoor unit can be set up and operated from the remote control (provided). If the remote is misplaced, the system can be operated from the "Auto" setting on the unit.

Operating Modes:

The indoor unit has five operating modes:

- **FAN Only**
- **AUTO**
- **HEATING (heat pumps only)**
- **COOLING**
- **DEHUMIDIFICATION**

FAN Only

In the FAN Only mode, the system filters and circulates the room air without changing room air temperature.

AUTO

In the AUTO mode, the system automatically cools or heats the room according to the user-selected set point.

NOTE: HEATING is the system's priority mode. Simultaneous HEATING and COOLING is not allowed.

HEATING

In the HEATING mode, the system heats and filters the room air.

COOLING

In the COOLING mode, the system cools, dries and filters the room air.

DEHUMIDIFICATION (DRY)

In DEHUMIDIFICATION mode, the system dries, filters and slightly cools the room air temperature. This mode prioritizes air dehumidification but it does not take the place of a dehumidifier.

WARNING - RISK OF FIRE DUE TO FLAMMABLE REFRIGERANT USED. FOLLOW HANDLING INSTRUCTIONS CAREFULLY IN COMPLIANCE WITH NATIONAL REGULATIONS.

R-454B Refrigerant Safety Group **A2L** R-454B

FCC

This device complies with part 15 of the FCC Rules. Operation is subject to the following two conditions: (1) This device may not cause harmful interference, and (2) this device must accept any interference received, including interference that may cause undesired operation.

FOR CLASS B DIGITAL DEVICE

NOTE: This equipment has been tested and found to comply with the limits for a Class B digital device, pursuant to part 15 of the FCC Rules. These limits are designed to provide reasonable protection against harmful interference in a residential installation. This equipment generates, uses and can radiate radio frequency energy and, if not installed and used in accordance with the instructions may cause harmful interference to radio communications. However, there is no guarantee that interference will not occur in a particular installation. If this equipment does cause harmful interference to radio or television reception, which can be determined by turning the equipment off and on, the user is encouraged to try t o correct the interference by one or more of the following measures:

• Reorient or relocate the receiving antenna

• Increase the distance between the equipment and the receiver

• Connect the equipment into an outlet on a circuit different from that to which the receiver is connected.

• Consult the dealer or an experienced radio/TV technician for assistance.

MODIFICATION: Any changes or modifications not expressly approved by the grantee of this device could void the user's authority to operate this device.

Minimum Room Area Requirements

Refer to the Installation Manual for Amin Table

Table 1 – Compatibility Tables

D5CUHAH Model Compatibility		
Model	**Indoor**	**Outdoor**
18k	D5FUAAH18XAK	D5CUHAH18AAK
24k	D5FUAAH24XAK	D5CUHAH24AAK
30k	D5FUAAH30XAK	D5CUHAH30AAK
36k	D5FUAAH36XAK	D5CUHAH36AAK
48k	D5FUAAH48XAK	D5CUHAH48AAK
60k	D5FUAAH60XAK	D5CUHAH60AAK

D5CURAH Model Compatibility		
Model	**Indoor**	**Outdoor**
18k	D5FUAAH18XAK	D5CURAH18AAK
24k	D5FUAAH24XAK	D5CURAH24AAK
30k	D5FUAAH30XAK	D5CURAH30AAK
36k	D5FUAAH36XAK	D5CURAH36AAK
48k	D5FUAAH48XAK	D5CURAH48AAK
60k	D5FUHAH60XAK	D5CURAH60AAK

AIRFLOW INFORMATION

When the unit detects a refrigerant leak, the minimum airflow of the unit is as follows:

Table 3 — Airflow

Model	18K	24K	30K	36K	48K	60K
Nominal Air Volume	400CFM (680m3/h)	400CFM (680m3/h)	447CFM (760m3/h)	541CFM (920m3/h)	706CFM (1200m3/h)	795CFM (1350m3/h)

ROOM SIZE RESTRICTIONS

The appliances are connected via an air duct system to one or more rooms. The bottom of the air outlet of the air duct in the room should be at a height of >7.3ft/2.2m from the floor. In UL/CSA 60335-2-40, the R454B refrigerant belongs to mildly flammable refrigerants, which will limit the room area of the system service. Similarly, the total amount of refrigerant in the system should be less than or equal to the maximum allowable refrigerant charge, which depends on the room are serviced by the system.

1. **Installation (where refrigerant pipes are allowed)**
   –Any person who is involved with working on or breaking into a refrigerant circuit should hold a current valid certificate from an industry-accredited assessment authority, which authorizes their competence to handle refrigerants safely in accordance with an industry recognized assessment specification.
   –Maintenance and repair requiring the assistance of other skilled personnel shall be carried out under the supervision of the person competent in the use of flammable refrigerants.
   –That the installation of pipe-work shall be kept to a minimum.
   –That pipe-work shall be protected from physical damage.
   –Where refrigerant pipes shall be compliance with national gas regulations.
   –That mechanical connections shall be accessible for maintenance purposes.
   –Be more careful that foreign matter (oil, water, etc) does not enter the piping. Also, when storing the piping, securely seal the opening by pinching, taping, etc.
   –Appliance shall be stored in a well ventilated area where the room size corresponds to the room area as specific for operation.
   –Joints shall be tested with detection equipment with a capability of 1/8 oz (5g)/year of refrigerant or better, with the equipment in standstill and under operation or under a pressure of at least these standstill or operation conditions after installation.
   –In cases that require mechanical ventilation, ventilation openings shall be kept clear of obstruction.

   LEAK DETECTION SYSTEM installed. Unit must be powered except for service. For the unit with refrigerant sensor, when the refrigerant sensor detects refrigerant leakage, the indoor unit will display a error code and emit a buzzing sound, the compressor of outdoor unit will immediately stop, and the indoor fan will start running. The service life of the refrigerant sensor is 15 years. When the refrigerant sensor malfunctions, the indoor unit will display the error code FHCC. The refrigerant sensor can not be repaired and can only be replaced by the manufacture. It shall only be replaced with the sensor specified by the manufacture.

2. **Because a FLAMMABLE REFRIGERANT is used**

   The requirements for installation space of appliance and/or ventilation requirements are determined according to:
   – the mass charge amount (M) used in the appliance,
   –-the installation location,
   –-the type of ventilation of the location or of the appliance.
   –-piping material, pipe routing, and installation shall include protection from physical damage in operation and service, and be in compliance with national and local codes and standards, such as ASHRAE 15, IAPMO Uniform Mechanical Code, ICC International Mechanical Code, or CSA B52. All field joints shall be accessible for inspection prior to being covered or enclosed.
   –-that protection devices, piping, and fittings shall be protected as far as possible against adverse environmental effects, for example, the danger of water collecting and freezing in relief pipes or the accumulation of dirt and debris;
   –-that piping in refrigeration systems shall be so designed and installed to minimize the likelihood of hydraulic shock damaging the system;
   –-that steel pipes and components shall be protected against corrosion with a rustproof coating before applying any insulation;
   –-that precautions shall be taken to avoid excessive vibration or pulsation;
   –-the minimum floor area of the room shall be mentioned in the form of a table or a single figure without reference to a formula;
   –-after completion of field piping for split systems, the field pipework shall be pressure tested with an inert gas and then vacuum tested prior to refrigerant charging, according to the following requirements:
   a. The minimum test pressure for the low side of the system shall be the low side design pressure and the minimum test pressure for the high side of the system shall be the high side design pressure, unless the high side of the system cannot be isolated from the low side of the system in which case the entire system shall be pressure tested to the low side design pressure.
   b. The test pressure after removal of pressure source shall be maintained for at least 1 hour with no decrease of pressure indicated by the test gauge, with test gauge resolution not exceeding 5% of the test pressure.
   c. During the evacuation test, after achieving a vacuum level specified in the manual or less, the refrigeration system shall be isolated from the vacuum pump and the pressure shall not rise above 1500 microns within 10 minutes. The vacuum pressure level shall be specified in the manual, and shall be the lessor of 500 microns or the value required for compliance with national and local codes and standards, which may vary between residential, commercial, and industrial buildings.
   –field-made refrigerant joints indoors shall be tightness tested according to the following requirements: The test method shall have a sensitivity of 1/8 oz (5g)/year of refrigerant or better under a pressure of at least 125% of the maximum allowable pressure. No leak shall be detected.

3. **Qualification of workers**

   Any maintenance, service and repair operations must be required qualification of the working personnel. Every working procedure that effects safety means shall only be carried out by competent persons that joined the training and achieved competence should be documented by a certificate. The training of these procedures is carried out by national training organizations or manufacturers that are accredited to teach the relevant national competency standards that may be set in legislation. Examples for such working procedures are:
   - breaking into the refrigerating circuit;
   - opening of sealed components;
   - opening of ventilated enclosures.

Information Servicing

1. Checks to the area

   Prior to beginning work on systems containing flammable refrigerants, safety checks are necessary to ensure that the risk of ignition is minimized. For repair to the refrigerating system, the following precautions shall be complied with prior to conducting work on the system.
2. Work procedure

   Works shall be undertaken under a controlled procedure so as to minimize the risk of a flammable gas or vapor being present while the work is being performed.
3. General work area

   All maintenance staff and others working in the local area shall be instructed on the nature of work being carried out. work in confined spaces shall be avoided.
4. Checking for presence of refrigerant

   The area shall be checked with an appropriate refrigerant detector prior to and during work to ensure the technician is aware of potentially flammable atmospheres. Ensure that the leak detection equipment is suitable for use with flammable refrigerants (no sparking, adequately sealed, or intrinsically safe).

5. Presence of fire extinguisher

   If any hot work is to be conducted on the refrigeration equipment or any associated parts, appropriate fire extinguishing equipment shall be available to hand. Have a dry power or CO2 fire extinguisher adjacent to the charging area.

6. No ignition sources

   No person carrying out work in relation to a REFRIGERATING SYSTEM which involves exposing any pipe work shall use any sources of ignition in such a manner that it may lead to the risk of fire or explosion. All possible ignition sources, including cigarette smoking, should be kept sufficiently far away from the site of installation, repairing, removing and disposal, during which refrigerant can possibly be released to the surrounding space. Prior to work taking place, the area around the equipment is to be surveyed to make sure that there are no flammable hazards or ignition risks. "No Smoking" signs shall be displayed.

7. Ventilated area

   Ensure that the area is in the open or that it adequately ventilated before breaking into the system or conducting any hot work. A degree of ventilation shall continue during the period that the work is carried out. The ventilation should safely disperse any released refrigerant and preferably expel it externally into the atmosphere.

8. Checks to the refrigeration equipment

   Where electrical components are being changed, they shall be fit for the purpose and to the correct specification. At all times the manufacturer's maintenance and service guidelines shall be followed. If in doubt consult the manufacturer's technical department for assistance. The following checks shall be applied to installations using FLAMMABLE REFRIGERANTS:

- The actual refrigerant charge is in accordance with the room size within which the refrigerant containing parts are installed;
- The ventilation machinery and outlets are operating adequately and are not obstructed;
- If an indirect refrigerating circuit is being used, the secondary circuits shall be checked for the presence of refrigerant;
- Marking to the equipment continues to be visible and legible, marking and signs that are illegible shall be corrected;
- Refrigeration pipe or components are installed in a position where they are unlikely to be exposed to any substance which may corrode refrigerant containing components, unless the components are constructed of materials which are inherently resistant to being corroded or are suitably protected against being so corroded.

9. Checks to electrical devices

   Repair and maintenance to electrical components shall include initial safety checks and component inspection procedures. If a fault exists that could compromise safety, then no electrical supply shall be connected to the circuit until it is satisfactorily dealt with. If the fault cannot be corrected immediately but it is necessary to continue operation, and adequate temporary solution shall be used. This shall be reported to the owner of the equipment so all parties are advised. Initial safety checks shall include:

- That capacitors are discharged: this shall be done in a safe manner to avoid possibility of sparking
- That there no live electrical components and wiring are exposed while charging, recovering or purging the system
- That there is continuity of earth bonding

10. Sealed electrical components shall be replaced.
11. Intrinsically safe components must be replaced.
12. Cabling

    Check that cabling is not subjected to wear, corrosion, excessive pressure, vibration, sharp edges or any other adverse environmental effects. The check shall also take into account the effects of aging or continual vibration from sources such as compressors or fans.

13. Detection of flammable refrigerants

    Under no circumstances shall potential sources of ignition be used in the searching for or detection of refrigerant leaks. A halide torch (or any other detector using a naked flame) shall not be used.

    The following leak detection methods are deemed acceptable for refrigerant systems. Electronic leak detectors that have a sensitivity of 1/8 oz (5g) may be used to detect refrigerant leaks but, in the case of FLAMMABLE REFRIGERANTS, the sensitivity may not be adequate, or may need re-calibration. (Detection equipment shall be calibrated in a refrigerant-free area.) Ensure that the detector is not a potential source of ignition and is suitable for the refrigerant used. Leak detection equipment shall be set at a percentage of the LFL of the refrigerant and shall be calibrated to the refrigerant employed, and the appropriate percentage of gas (25% maximum) is confirmed.

    Leak detection fluids are also suitable for use in external leak detection.

NOTE: Examples of leak detection fluids are as follows:

- **Bubble method**
- **Fluorescent method agents**

If a leak is suspected, all naked flames shall be removed/extinguished.

If a leakage of refrigerant is found which requires brazing, all of the refrigerant shall be recovered from the system, or isolated (by means of shut off valves) in a part of the system remote from the leak. See the following instructions of removal of refrigerant.

14. Removal and evacuation

    When breaking into the refrigerant circuit to make repairs - or for any other purpose conventional procedures shall be used. However, for flammable refrigerants it is important that best practice be followed, since flammability is a consideration.

    The following procedure shall be adhered to:

    a. safely remove refrigerant following local and national regulations;
    b. evacuate;
    c. purge the circuit with nitrogen;
    d. evacuate;
    e. continuously flush or purge with nitrogen when using flame to open circuit; and open the circuit.

The refrigerant charge shall be recovered into the correct recovery cylinders. Charging must be performed by liquid charging method. For appliances containing flammable refrigerants, the system shall be purged with oxygen-free nitrogen to render the appliance safe for flammable refrigerants. This process might need to be repeated several times. Compressed air or oxygen shall not be used for purging refrigerant systems.

For appliances containing flammable refrigerants, refrigerants purging shall be achieved by breaking the vacuum in the system with oxygen-free nitrogen and continuing to fill until the working pressure is achieved, then venting to atmosphere, and finally pulling down to a vacuum (optional for A2L). This process shall be repeated until no refrigerant is within the system (optional for A2L). When the final oxygen-free nitrogen charge is used, the system shall be vented down to atmospheric pressure to enable work to take place.

The outlet for the vacuum pump shall not be close to any potential ignition sources, and ventilation shall be available.

15. Charging procedures

    In addition to conventional charging procedures, the following requirements shall be followed:

- Works shall be undertaken with appropriate tools only. If uncertain, consult the manufacturer of the tools for use with flammable refrigerants.
- Ensure that contamination of different refrigerants does not occur when using charging equipment. Hoses or lines shall be as short as possible to minimize the amount of refrigerant contained in them.
- Charging must be performed by liquid charging method.
- Ensure that the refrigeration system is grounded prior to charging the system with refrigerant.
- Label the system when charging is complete.
- Extreme care shall be taken to avoid overfilling the refrigeration system.
- Prior to recharging the system, it shall be pressure tested with oxygen free nitrogen (OFN). The system shall be leak tested on completion of charging but before commissioning. A follow up leak test shall be carried out prior to leaving the site.

16. Decommissioning

    Before carrying out this procedure, it is essential that the technician is completely familiar with the equipment and all its detail. It is recommended good practice that all refrigerants are recovered safely. Prior to the task being carried out, an oil and refrigerant sample shall be taken in case analysis is required prior to re-use of recovered refrigerant. It is essential that electrical power is available before the task is commenced.

    a. Become familiar with the equipment and its operation
    b. Isolate system electrically
    c. Before attempting the procedure, ensure the following:
        - Mechanical handling equipment is available, if required, for handling refrigerant cylinders
        - All personal protective equipment is available and being used correctly
        - The recovery process is supervised at all times by a competent person
        - Recovery equipment and cylinders conform to the appropriate standards
    d. Pump down refrigerant system, if possible.
    e. If a vacuum is not possible, make a manifold so that refrigerant can be removed from various parts of the system.
    f. Ensure the cylinder is situated on the scales before recovery takes place.
    g. Start the recovery machine and operate in accordance with instructions.
    h. Do not overfill cylinders (no more than 80% volume liquid charge).
    i. Never exceed the maximum working pressure of the cylinder.
    j. When the cylinders have been filled correctly and the process complete, make sure that the cylinders and the equipment are removed from site promptly and all isolation valves on the equipment are closed off.
    k. Recovered refrigerant shall not be charged into another refrigeration system unless it has been cleaned and checked.

17. Labeling

    Equipment shall be labeled stating that it has been decommissioned and emptied of refrigerant. The label shall be dated and signed. For appliances containing FLAMMABLE REFRIGERANTS, ensure that there are labels on the equipment stating the equipment contains FLAMMABLE REFRIGERANT.

18. Recovery

    When removing refrigerant from a system, either for servicing or decommissioning, it is recommended good practice that all refrigerants are removed safely.

    When transferring refrigerant into cylinders, ensure that only appropriate refrigerant recovery cylinders are employed. Ensure that the correct number of cylinders for holding the total system charge is available. All cylinders to be used are designated for the recovered refrigerant and labeled for that refrigerant (i. e. special cylinders for the recovery of refrigerant). Cylinders shall be complete with pressure-relief valve and associated shut-off valves in good working order. Empty recovery cylinders are evacuated and, if possible, cooled before recovery occurs.

    The recovery equipment shall be in good working order with a set of instructions concerning the equipment that is at hand and shall be suitable for the recovery of the flammable refrigerant. If in doubt, the manufacturer should be consulted. In addition, a set of calibrated weighing scales shall be available and in good working order. Hoses shall be complete with leak-free disconnect couplings and in good condition.

    The recovered refrigerant shall be processed according to local legislation in the correct recovery cylinder, and the relevant waste transfer note arranged. Do not mix refrigerants in recovery units and especially not in cylinders.

    If compressors or compressor oils are to be removed, ensure that they have been evacuated to an acceptable level to make certain that flammable refrigerant does not remain within the lubricant. The compressor body shall not be heated by an open flame or other ignition sources to accelerate this process. When oil is drained from a system, it shall be carried out safely.

19. Transportation, marking, and storage for units

    a. Transport of equipment containing flammable refrigerants.
        Compliance with the transport regulations.
    b. Marking of equipment using signs.
        Compliance with local regulations.
    c. Disposal of equipment using flammable refrigerants.
        Compliance with national regulations.
    d. Storage of equipment/appliances
        The storage of equipment should be in accordance with the manufacturer's instructions.
    e. Storage of packed (unsold) equipment
        Storage package protection should be constructed such that mechanical damage to the equipment inside the package will not cause a leak of the refrigerant charge. The maximum number of pieces of equipment permitted to be stored together will be determined by local regulations.

Table 2 — Symbols on the indoor unit or outdoor unit

A2L	**WARNING**	This symbol shows that this appliance used a flammable refrigerant. If the refrigerant is leaked and exposed to an external ignition source, there is a risk of fire.
	CAUTION	This symbol shows that the operation manual should be read carefully.
	CAUTION	This symbol shows that a service personnel should be handling this equipment with reference to the installation manual.
	CAUTION	
	CAUTION	This symbol shows that information is available such as the operating manual or installation manual.

ACCESSORIES

The system is shipped with the following accessories (see Table 3). Keep the owner's manual in a safe place and do not discard any accessories until the installation has been completed.

Table 3 — Accessories

Name	Image	Quantity
Owner's and Installation Manual		2
Remote Controller		1
Batteries	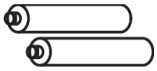	2
Suction Line Flare to Braze Adapter 3/4" (18K-48K) 7/8" (60K)	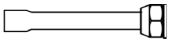	1
Liquid Line Flare to Braze Adapter 3/8" (All Sizes)		1
Insulation Sleeve	N/A	1
Fastening Belt		2
Sponge		4
Flare Nut (18K-60K)		2

INDOOR UNIT PARTS AND MAJOR FUNCTIONS

Unit Parts

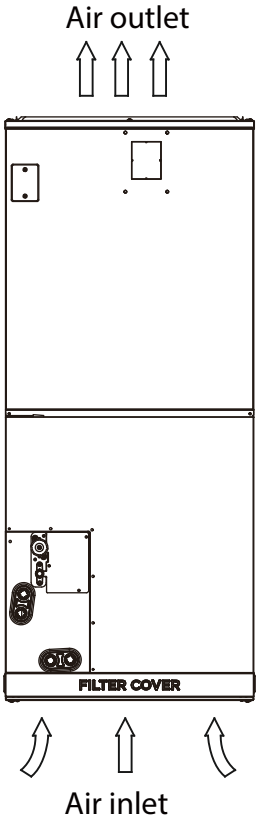

Fig. 1 — Unit Parts

Operating Conditions

Use the system under the following temperatures for safe and effective operation. If the air conditioner is used under different conditions, it may malfunction or become less efficient.

Table 4 — Inverter Split Type

	COOL Mode	HEAT Mode	Dry Mode
Room Temperature	60°F - 90°F (16°C - 32°C)	32°F - 86°F (0°C - 30°C)	50°F - 90°F (10°C - 32°C)
Outdoor Temperature	-22°F - 122°F (-30°C - 50°C) (For Hyper Heat Series)	-22°F - 75°F (-30°C - 24°C) (For Hyper Heat Series)	32°F - 122°F (0°C - 50°C)
	-13°F - 122°F (-25°C - 50°C) (For Regular Heat Series)	-13°F - 75°F (-25°C - 24°C) (For Regular Heat Series)	

For Outdoor Units With Auxiliary Electric Heater

When the outside temperature is below 32°F (0°C), we strongly recommend keeping the outdoor unit powered at all times to prevent damage to the equipment.

NOTE: Room relative humidity less than 80%. If the air conditioner operates in excess of this figure, the surface of the air conditioner may attract condensation.

To further optimize the performance of the unit, perform the following steps:

- Keep doors and windows closed.
- Limit energy usage by using TIMER ON and TIMER OFF functions.
- Do not block air inlets or outlets.
- Regularly inspect and clean air filters.

ENERGY SAVING TIPS

- **DO NOT set the unit to excessive temperature levels.**
- **While cooling, close the curtains to avoid direct sunlight.**
- **Doors and windows should be kept closed to keep cool or warm air in the room.**
- **DO NOT place objects near the air inlet and outlet of the unit.**
- **Replace the air FILTER every 30 to 90 days depending on thickness and MERV.**

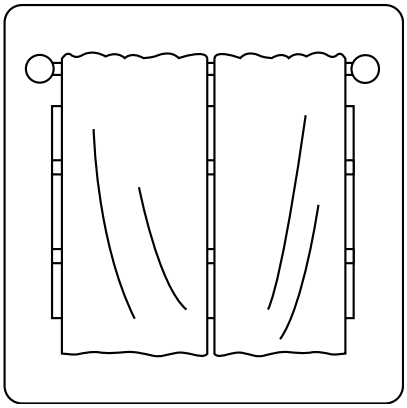

Fig. 2 —Closing curtains during heating helps keep heat in

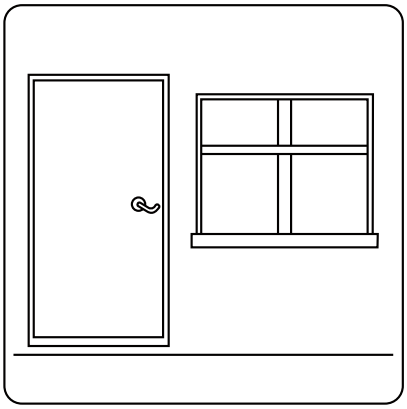

Fig. 3 —Doors and windows should be kept closed

CONTROLS OPTIONS

The air handler fan coil unit can be controlled mainly through the following methods.

1. **Wired controller (Optional) - KSACN1401AAA**
   Non-polarity controller used to operate all functions. The wired controller is equipped with an infrared receiver and can be used in conjunction with the wireless controller.

x

Fig. 4 – Wired Controller

2. **Wireless controller (Included)**
   Hand-held wireless remote provides the same functionality as the wired controller and can be used independently or in conjunction with the wired controller.
3. **Third party heat pump thermostat (Not Included)**
   Allows the control of the air handler via the built-in 24V interface.

NOTE: The wired controller and wireless remote cannot be used when a third party thermostat is used.

WIRELESS REMOTE CONTROL

Before you begin using your new unit, familiarize yourself with the remote control. See page 10 through page 14 for more information on these controls.

ON/OFF
Turns the unit on or off.

TEMP ∧
Increases temperature in 1°F (0.5°C) increments. Max. temperature is 86°F (30°C).
NOTE: Press together ∨ & ∧ buttons at the same time for 3 seconds to alternate the temperature display between the °F and °C.

SET
Scroll through operation functions as follows:
Active clean( )→ Fresh( )→Sleep( )→ Follow Me( )→AP mode ( )→Active clean( )…….
The selected symbol flashes on the display area, press OK to confirm.

TEMP ∨
Decreases temperature in 1°F (0.5°C) increments.
Min. temperature is 60°F(16°C)

FAN SPEED
Selects fan speeds in the following order: AU→ 20% → 40%→ 60%→80% → 100%.
Press the TEMP ∧ or ∨ to increase/decrease the fan speed in 1% increments.

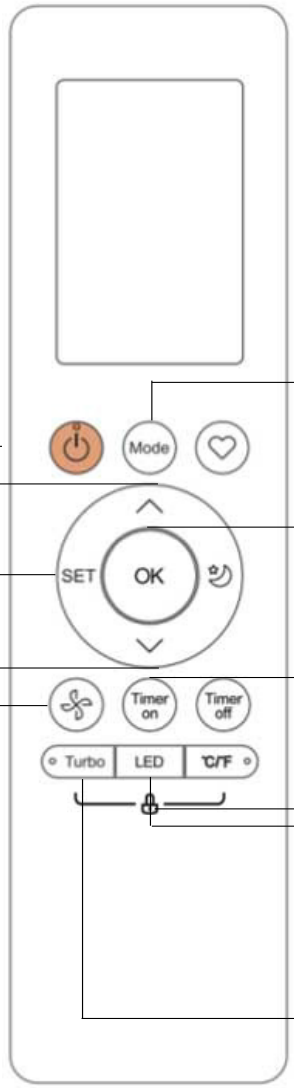

MODE
Scroll through operation modes as follows: AUTO → COOL→ DRY→ HEAT → FAN

OK
Use to confirm the selected functions.

TIMER
Set timer to turn unit on or off

LOCK

LED
Turns indoor unit's LED display and air conditioner buzzer on and off, which creates a comfortable and quiet environment.

TURBO
Enables unit to reach preset temperature in shortest possible time.

Fig. 5 —Remote Control Functions (RG10F8(2)/BGEFU1)

NOTE: Intelligence Sensor and Vertical Swing functions are not available on this unit.

NOTE: Hold TURBO and °C/°F button for five seconds to lock or unlock the wireless remote controller.

NOTE: The wired controller and wireless remote cannot be used when a third party thermostat is used.

Wireless Remote Control LCD Screen Indicators

Information appears when the remote controller is powered up.

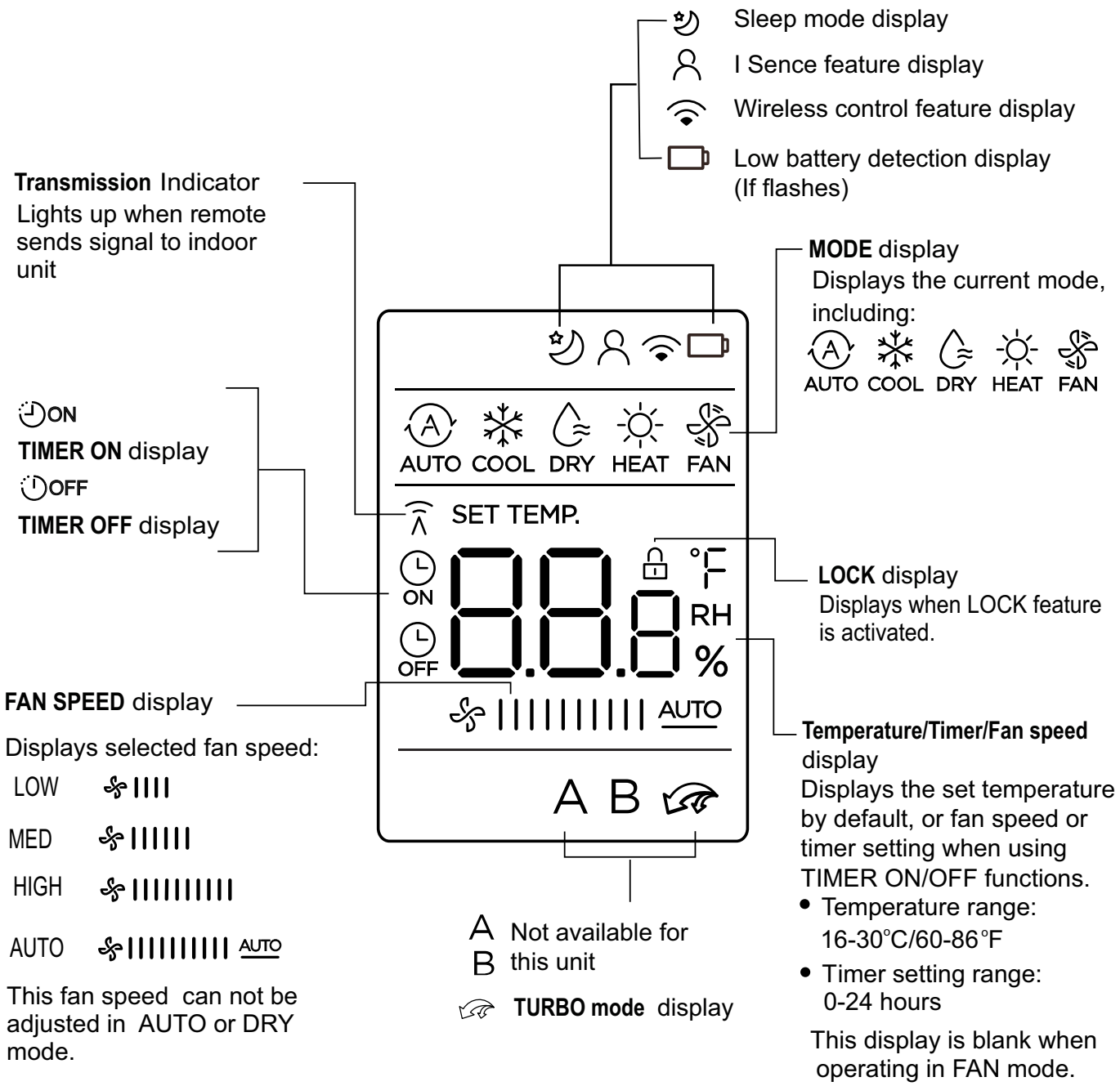

Fig. 6 —Wireless Remote Control Indicators

REMOTE CONTROL

NOTE: All features may not be available. This remote is shared across other indoor units.

CAUTION

EQUIPMENT DAMAGE HAZARD

Failure to follow this caution may result in equipment damage. Handle the control with care and avoid getting the control wet.

IMPORTANT: The remote control can operate the unit from a distance of up to 26 ft. (8 m) as long as there are no obstructions. When the timer function is used, the remote control should be kept in the vicinity of the fan coil (within 26 ft. / 8 m).

The remote control can perform the following basic functions:

- **Turn the system ON and OFF**
- **Select the operating mode**
- **Adjust room air temperature set point and fan speed**
- **Adjust right-left airflow direction**

Refer to the ""BASIC REMOTE CONTROL OPERATION" on page 12" for a detailed description of all the capabilities of the remote control.

Refer to the Wireless Remote Control manual (RG10F8).

Battery Installation

Two AAA 1.5v alkaline batteries (included) are required for remote control operation.

To install or replace batteries:

1. Slide the back cover off the control to open the battery compartment.
2. Insert the batteries. Follow the polarity markings inside the battery compartment.
3. Replace the battery compartment cover.

NOTES:

1. When replacing batteries, do not use old batteries or a different type battery. This may cause the remote control to malfunction.
2. If the remote is not going to be used for several weeks, remove the batteries. Otherwise, battery leakage may damage the remote control.
3. The average battery life under normal use is about 6 months.
4. Replace the batteries when there is no audible beep from the indoor unit or if the Transmission Indicator fails to light.
5. When batteries are removed, the remote control erases all programmed settings. The control must be reprogrammed after the insertion of new batteries.

Remote Control Operation - Quick Start

NOTE: When transmitting a command from the remote control to the unit, be sure to point the control toward the right side of the unit. The unit confirms receipt of a command by sounding an audible beep.

1. Turn the unit on by pushing ON/OFF.

NOTE: If there is a preference for °C rather than °F (default), press and hold the + and - temperature set point buttons together for approximately 3 seconds.

2. Select the desired mode by pushing MODE.

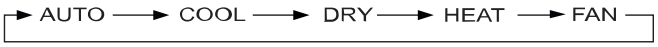

Fig. 7 —Modes

3. Select the temperature set point by pointing the control toward the unit and pressing the increase/decrease temperature set point buttons until the desired temperature appears on screen.
4. Press FAN to select the desired fan speed.

NOTE: If the unit is operating in DRY or AUTO mode, the fan speed will be automatically set and cannot be adjusted.

Fig. 8 —Remote Controller

BASIC REMOTE CONTROL OPERATION

Before operation, ensure the unit is plugged in and power is available.

COOL Mode

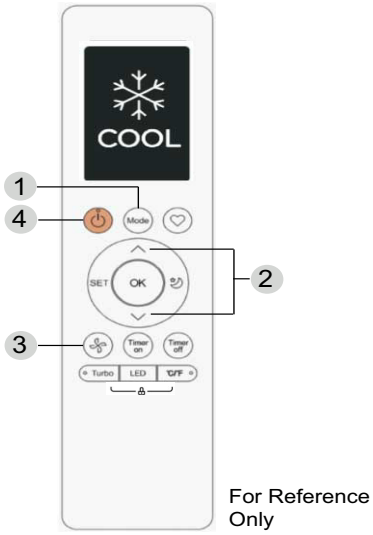

Fig. 9 —COOL Mode

1. Press MODE to select the COOL mode.
2. Set your desired temperature using TEMP or TEMP .
3. Press FAN to select the fan speed in a range of AU'100%,
4. Press ON/OFF to start the unit.

Setting Temperature

The operating temperature range for units is 60-86°F (16-30°C)/68-82 °F (20-28°C) (depends on model). You can increase or decrease the set temperature in 1°F (0.5°C) increments.

HEAT Mode

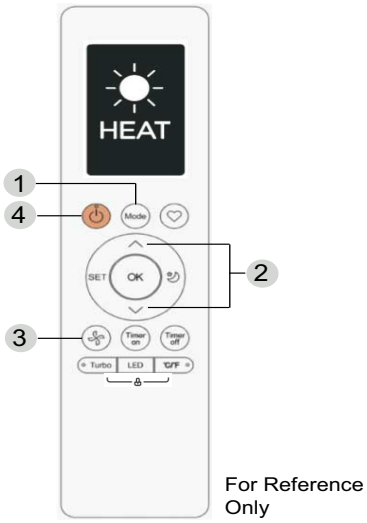

Fig. 10 —HEAT Mode

1. Press MODE to select the HEAT mode.
2. Set your desired temperature using TEMP or TEMP .
3. Press FAN to select the fan speed in the range of AU-100%.

NOTE: As the outdoor temperature drops, the performance of your unit's HEAT function may be affected. In such instances, we recommend using this air conditioner in conjunction with other heating appliances.

AUTO Mode

In AUTO mode, the unit automatically selects the COOL, FAN, or HEAT operation based on the set temperature.

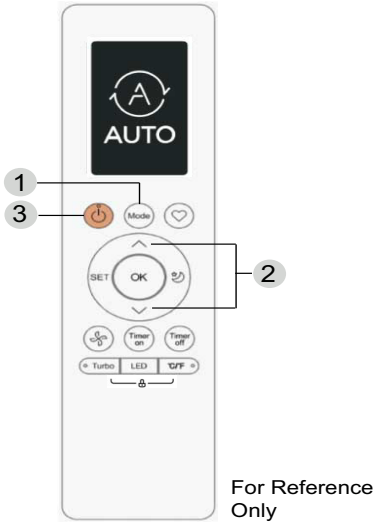

Fig. 11 —AUTO Mode

1. Press MODE to select AUTO.
2. Set your desired temperature using TEMP or TEMP .
3. Press ON/OFF to start the unit.

NOTE: FAN Speed can not be set in the AUTO mode.

DRY Mode

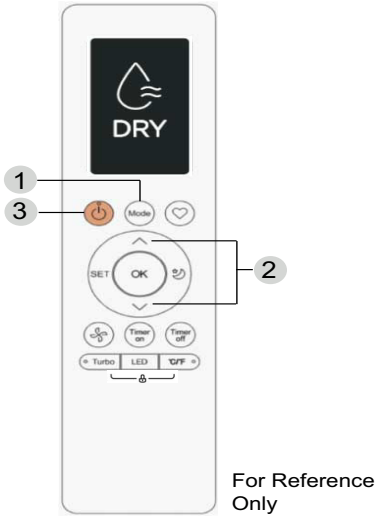

Fig. 12 —DRY Mode

1. Press MODE to select the DRY mode.
2. Set your desired temperature using TEMP or TEMP .
3. Press ON/OFF to start the unit.

FAN Mode

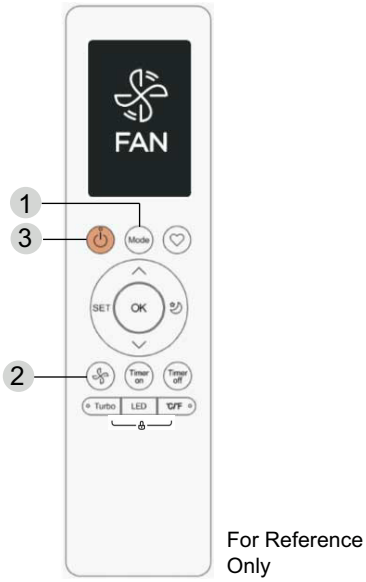

Fig. 13 —FAN Mode

1. Press MODE to select the FAN mode.
2. Press FAN to select the fan speed in the range of AU-0%.
3. Press ON/OFF to start the unit.

REMOTE CONTROL FUNCTIONS

Press ON/OFF

When the air conditioner is not in operation, the remote control displays the last set point and mode.

- **Press ON/OFF to start the unit.**
  - The unit starts in the last operating mode and set point.
  - The ON/OFF indicator appears.
- **Press ON/OFF to stop the unit.**
  - All the indicator lights on the unit go out, and the remote control displays the set point and mode.

NOTE: If ON/OFF is pressed too soon after a stop, the compressor will not start for 3 to 4 minutes due to the inherent protection against frequent compressor cycling. The unit only emits an audible beep when the signals are received correctly.

Selecting the Operating Mode

Select OPERATING mode to select one of the available modes.

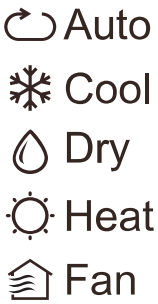

Fig. 14 —Display

Setting the Room Temperature Set Point

Press TEMP or TEMP to raise or lower the temperature. The unit confirms the signal receipt with a beep and the value of the set temperature appears on the display and changes accordingly. The temperature can be set between 62°F (17°C) and 86°F (30°C) in increments of 1°F or 1°C.

NOTE: In the COOLING mode, if the temperature selected is higher than the room temperature, the unit will not start. The same applies for the HEATING mode if the selected temperature is lower than the room temperature.

Selecting the Fan Speed

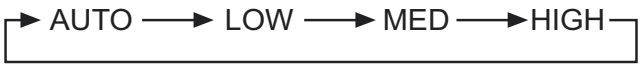

Fan Speeds

Press FAN to select the fan speed.

NOTE: When the unit is on, the fan runs continuously in COOLING or HEATING mode. When in the HEATING mode, there might be situations where the fan will slow down or shut off to prevent cold blow.

Timer Function

TIMER ON (to start the unit) and TIMER OFF (to stop the unit) can be used separately or together.

Timer ON only

This function allows the unit to start automatically at the set time. The TIMER ON can be set while the unit is on or off.

UNIT ON

1. Press TIMER ON to initiate the auto-on time sequence. The set time is displayed in the remote control display. Every time TIMER ON is pressed, the time increases by 30 minutes, up to 10 h. It increases by 60 minutes, afterwards, until the time setting reaches 24 h.
2. When TIMER ON is set, the light on the unit illuminates. The unit continues to run at the set time.

UNIT OFF

1. Set the timer described in the UNIT ON section. The unit starts at the set time.
2. Adjust the TIMER ON settings to 0.0 to cancel this option.

Timer OFF only

This function allows the unit to stop automatically at the set time. The timer can be set while the unit is on or while it is off.

UNIT ON

1. Press TIMER OFF to initiate the auto-off time sequence. The set time appears on the remote control display. Every time TIMER OFF is pressed, the time increases by 30 minutes, up to 10 h. It increases by 60 minutes, afterwards, until the time settings reach 24 h.
2. When TIMER OFF is set, the timer light on the unit illuminates and the unit turns off automatically at the set time.

UNIT OFF

1. Set the TIMER to off as described in the UNIT ON section. The TIMER display on the unit illuminates and the unit remains off.
2. Adjust the TIMER ON settings to 0.0 to cancel this option.

Timer ON and Timer OFF

Use both functions to program the unit to turn on and shut off at specified times.

UNIT OFF

1. Set TIMER ON as previously described.
2. Set TIMER OFF as previously described. The unit starts automatically at the set TIME ON and turns off at the set TIME OFF.

UNIT ON

1. Set TIME OFF as previously described.
2. Set TIME ON as previously described. The unit turns off automatically at the set TIME OFF and turns on at the set TIME ON.

SLEEP Mode

The SLEEP mode is used to conserve energy and can be used when the unit is in the COOL, HEAT or AUTO mode only.

COOL Mode

Push SLEEP. After 1 hour the set point raises by 2°F (1°C). After another hour, the set point raises by another 2°F (1°C) and the fan runs in a low speed. The unit shuts off 5 hours after setting the SLEEP mode. The SLEEP mode cancels if either the MODE, TEMP, FAN, TIMER, or ON/OFF buttons on the remote control are pressed.

HEAT Mode

Same as the COOLING mode however the set points are lowered by 2°F (1°C).

TURBO Mode

Use the TURBO mode to cool or heat the room rapidly.

Press TURBO (an audible "beep" is heard if the indoor unit supports this function). The fan runs on super high speed. The TURBO mode terminates automatically 20 minutes after pressing TURBO.

The mode can be terminated immediately by pressing TURBO again. When the TURBO mode is terminated, the unit reverts to the original setting.

CLEAN Mode

Press CLEAN to activate or deactivate the self-cleaning function. Under this function, the air conditioner automatically cleans and dries the evaporator. The cleaning cycle takes 30 minutes, after which the unit turns off automatically. Press CLEAN on the middle of the cycle to cancel the operation and turn off the unit. This function can be activated only in the COOL or DRY mode.

LED Light

Press LED to turn the display light on and off.

Resetting the Remote Control

If the batteries in the remote control are removed, the current settings will be canceled and the control returns to the initial settings and enter the STANDBY mode. Push TURBO to activate.

Time Delay

If ON/OFF is pressed too soon after a stop, the compressor will not start for 3 to 4 minutes due to the inherent protection against frequent compressor cycling. The unit only emits an audible beep when the signals are received correctly.

Heating Features

If the unit is in the heating mode, there is a delay when the fan starts. The fan starts only after the coil is warmed up to prevent cold blow.

Auto Defrost Operation

In HEATING mode, if the outdoor coil is frosted, the indoor fan and outdoor fan turns off while the system removes the frost on the outdoor coil. The system automatically reverts to normal operation when frost is removed from the outdoor unit.

Auto Start

If the power fails while the unit is operating, the unit stores the operating condition, and the unit starts the stored operation automatically when the power is restored.

OPERATION INSTRUCTIONS

NOTES:

- **Different models have different front panel and display window. Not all the indicators describing below are available for the air conditioner you purchased. Check the indoor display window of the unit you purchased.**
- **Illustrations in this manual are for explanatory purposes. The actual shape of your indoor unit may be slightly different. See Fig. 15. The actual shape shall prevail.**
- **This display panel on the indoor unit can be used to operate the unit in case the remote control has been misplaced or is out of batteries. See Fig. 15.**

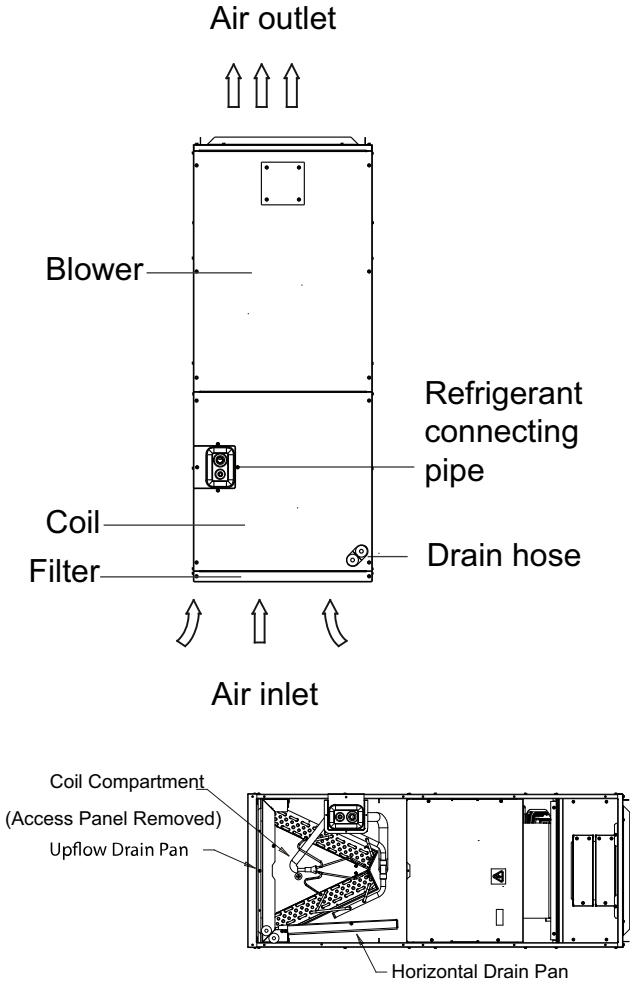

Fig. 15 —Indoor Unit Representation

- **FORCED COOL mode: In FORCED COOL mode, the Operation light flashes. The system will then turn to AUTO after it has cooled with a high wind speed for 30 minutes. The remote control will be disabled during this operation.**
- **OFF mode: When the controller is turned off, the unit turns off and will not come back on until the controller is turned back on**

BUILT-IN 24V INTERFACE STANDARD

Allows the control of the air handler with a third party thermostat (field supplied).

Other Features

Default Setting

When the unit restarts after a power failure, it will default to the factory settings (AUTO mode, AUTO fan, 76°F (24°C)). This may cause inconsistencies on the remote control and unit panel. Use your remote control to update the status.

Auto-Restart

In case of power failure, the system will immediately stop. When power returns, the Operation light on the indoor unit flashes. To restart the unit, press ON/OFF on the remote control. If the system has an auto restart function, the unit will restart using the same settings.

Three-Minute Protection Feature

A protection feature prevents the unit from being activated for approximately 3 minutes when it restarts immediately after operation.

Heat Exchanger Dust Removal Function

This feature helps keep the outdoor coil cleaner and may extend the duration between regular maintenance intervals depending on local conditions. When the unit is turned off, a 10 seconds delay occurs and the outdoor fan runs in reverse rotation for 70 seconds to blow off loose accumulated dust and debris.

Sleep Operation

The SLEEP function is used to decrease energy use while you sleep (and you do not need the same temperature settings to stay comfortable). This function can only be activated via remote control. And the Sleep function is not available in FAN or DRY mode.

Press SLEEP when you are ready to go to sleep. When in COOL mode, the unit will increase the temperature by 2°F (1°C) after 1 hour, and will increase an additional 2°F (1°C) after another hour.

When in HEAT mode, the unit will decrease the temperature by 2°F (1°C) after 1 hour, and will decrease an additional 2°F (1°C) after another hour.

The sleep feature will stop after 8 hours and the system will keep running with final situation.

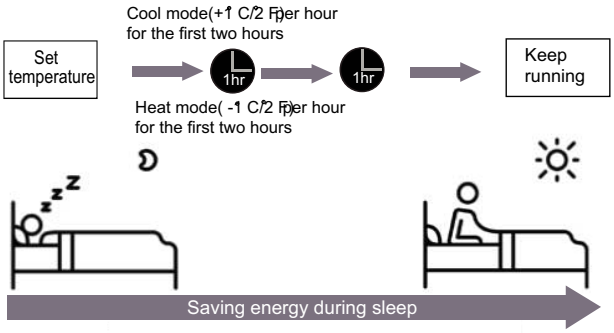

Fig. 16 —Sleep Operation

Refrigerant Leakage Detection

- **When the system detects a malfunction of the refrigerant, the indoor unit will automatically display the following error codes:**

  "EL0C (System lacks refrigerant)" ,

  "EHC1 (Refrigerant sensor detects leakage)",

  "EHC2 (Working condition of the refrigerant sensor is out of range and leakage is detected)", "EHC3 (Working condition of the refrigerant sensor is out of range)", or

  "ECC1 (Other indoor unit refrigerant sensor detects leakage (Multi-zone)".
- **When "EHC1" error occurs, the buzzer will continue to beep for 5 to 6 minutes before stopping. You can also press any button on the remote controller to stop the buzzer.**

CARE AND MAINTENANCE

CLEANING THE INDOOR UNIT

CAUTION

BEFORE CLEANING OR MAINTENANCE

Always TURN OFF your AC system and disconnect its power supply before cleaning or maintenance.

Use an authorized service technician for repair or maintenance. Improper repair and maintenance may cause water leakage, electrical shock, or fire, and may void your warranty.

Do not substitute a blown fuse with a higher or lower amperage rating fuse, as this may cause circuit damage or an electrical fire. Replacement Fuse must be identical to one removed.

Make sure the drain hose is set up according to the instructions. Failure to do so could cause leakage and result in personal property damage, fire, or electric shock.

Make sure that all wires are connected properly. Failure to connect wires according to instructions can result in electrical shock or fire.

CAUTION

Maintaining the Unit

Only use a soft, dry cloth to wipe the unit clean. If the unit is especially dirty, you can use a cloth soaked in warm water to wipe it clean.

Do not use chemicals or chemically treated cloths to clean the unit.

Do not use benzene, paint thinner, polishing powder or other solvents to clean the unit. They can cause the plastic surface to crack or deform. Use of volatile cleaners may cause fire, resulting in injury or death.

Do not use water hotter than 104°F (40°C) to clean the front panel. This can cause the panel to deform or become discolored.

Do not wash the unit under running water. Doing so creates an electrical hazard.

Clean the unit using a damp, lint-free cloth and neutral detergent. Dry the unit with a dry, lint-free cloth.

NOTE: Inspect and clean or replace air filter each month or as required. The user needs to purchase a standard filter that meets the requirements of UL900. For questions about the selection of filters, consult the manufacturer.

CAUTION

CLEANING AND MAINTENANCE WARNINGS

Turn off the device and disconnect the power before cleaning. Failure to do so can cause electric shock.

DO NOT clean the air conditioner with excessive amounts of water.

DO NOT clean the air conditioner with combustible cleaning agents. Combustible cleaning agents can cause fire or deformation.

Cleaning Your Indoor Unit (Air Filter)

CAUTION

Before changing the filter or cleaning, turn off the unit and disconnect its power supply.

When removing filter, do not touch metal parts in the unit. The sharp metal edges can cut you.

Do not use water to clean the inside of the indoor unit. This can destroy insulation and cause electrical shock.

Do not expose filter to direct sunlight when drying. This can shrink the filter.

Any maintenance and cleaning of outdoor unit should be performed by an authorized dealer or a licensed service provider.

Any unit repairs should be performed by an authorized dealer or a licensed service provider.

1. Remove the filter cover.
2. Remove the air filter.
3. Clean the air filter by vacuuming the surface or washing the filter in warm water with mild detergent.

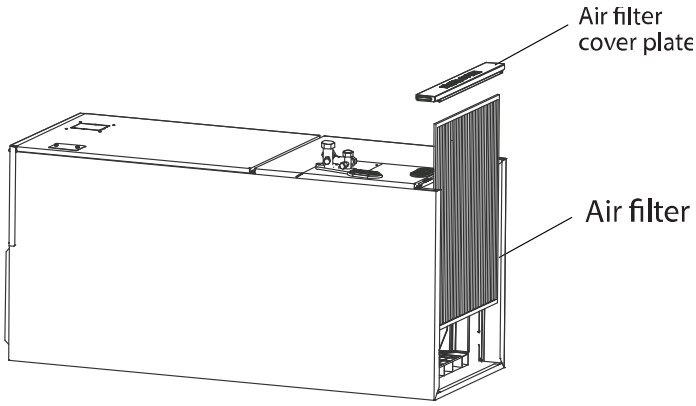

Fig. 17 —Remove Air Filter Cover

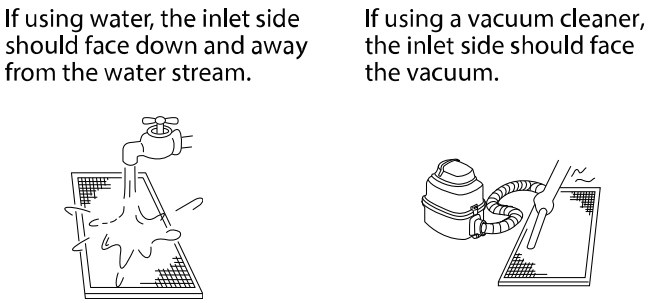

Fig. 18 —Cleaning Filter with Water or Vacuum

Maintaining the Unit

Maintenance –Long Periods of Non-Use

If you plan not to use your unit for an extended period of time, perform the following steps:

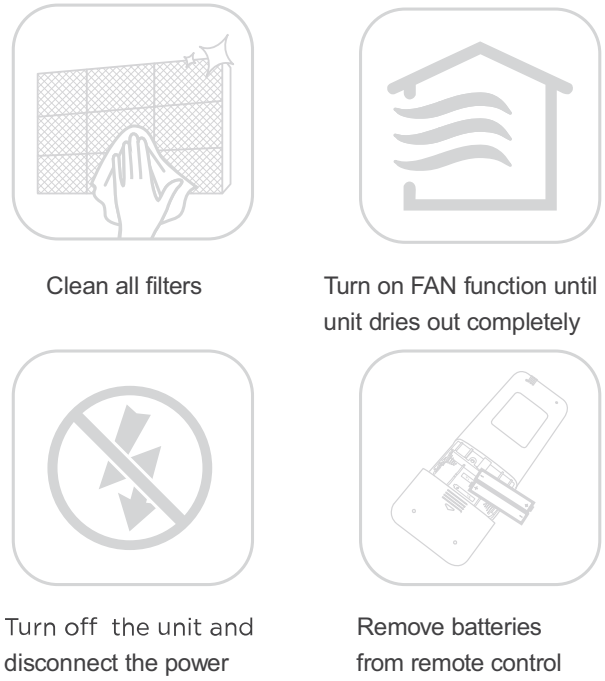

Fig. 19 —Maintenance - Long Periods of Non-Use

Maintenance – Pre-Season Inspection

After long periods of non-use, or before periods of frequent use, do the following:

Fig. 20 —Maintenance – Pre-Season Inspection

TROUBLESHOOTING

⚠ CAUTION

If any of the following conditions occurs, turn off your unit immediately.

- **The field wiring cable is damaged or abnormally warm**
- **You smell a burning odor**
- **The unit emits loud or abnormal sounds**
- **A power fuse blows or the circuit breaker frequently trips**
- **Water or other objects fall into or out of the unit**

DO NOT ATTEMPT TO FIX THESE YOURSELF. CONTACT AN AUTHORIZED SERVICE PROVIDER IMMEDIATELY.

Table 5 — Common Issues

Issue	Possible Causes
Unit does not turn on when pressing ON/OFF button	The Unit has a 3-minutes protection feature that prevents the unit from overloading. The unit cannot be restarted within three minutes of being turned off.
	Cooling and Heating Models: If the Operation light and PRE-DEF (Pre-heating/Defrost) indicators are lit up, the outdoor temperature is too cold and the unit's anti-cold wind is activated in order to defrost the unit.
	In Cooling-only Models: If the "Fan Only" indicator is lit up, the outdoor temperature is too cold and the unit's anti-freeze protection is activated in order to defrost the unit.
The unit changes from COOL/ HEAT mode to FAN mode	The unit may change its setting to prevent frost from forming on the unit. Once the temperature increases, the unit will start operating in the previously selected mode again.
	The set temperature has been reached, at which point the unit turns off the compressor. The unit will continue operating when the temperature fluctuates again.
The indoor unit emits white mist	In humid regions, a large temperature difference between the room's air and the conditioned air can cause white mist.
Both the indoor and outdoor units emit white mist	When the unit restarts in HEAT mode after defrosting, white mist may be emitted due to moisture generated from the defrosting process.
The indoor unit makes noises	A rushing air sound may occur when the louver resets its position.
	A squeaking sound is heard when the system is OFF or in COOL mode. The noise is also heard when the drain pump (optional) is in operation.
	A squeaking sound may occur after running the unit in HEAT mode due to expansion and contraction of the unit's plastic parts.
Both the indoor unit and outdoor unit make noises	Low hissing sound during operation: This is normal and is caused by refrigerant gas flowing through both indoor and outdoor units.
	Low hissing sound when the system starts, has just stopped running, or is defrosting: This noise is normal and is caused by the refrigerant gas stopping or changing direction.
	Squeaking sound: Normal expansion and contraction of plastic and metal parts caused by temperature changes during operation can cause squeaking noises.
The outdoor unit makes noises	The unit will make different sounds based on its current operating mode.
Dust is emitted from either the indoor or outdoor unit	The unit may accumulate dust during extended periods of non-use, which will be emitted when the unit is turned on. This can be mitigated by covering the unit during long periods of inactivity.
The unit emits a bad odor	The unit may absorb odors from the environment (such as furniture, cooking, cigarettes, etc.) which will be emitted during operations.
	The unit's filters have become moldy and should be cleaned.
The fan of the outdoor unit does not operate	During operation, the fan speed is controlled to optimize product operation.
Leak Detection	**Leak Detection System** installed. Unit must be powered except for service. For the unit with refrigerant sensor, when the refrigerant sensor detects refrigerant leakage, the indoor unit will display a error code and emit a buzzing sound, the compressor of outdoor unit will immediately stop, and the indoor fan will start running. The service life of the refrigerant sensor is 15 years. When the refrigerant sensor malfunctions, the indoor unit will display the error code FHCC. The refrigerant sensor can not be repaired and can only be replaced by the manufacture. It shall only be replaced with the sensor specified by the manufacture.

NOTE: If problem persists, contact a local dealer or your nearest customer service center. Provide them with a detailed description of the unit malfunction as well as your model number.

Table 6 — Other Issues

When troubles occur, check the following points before contacting a repair company.

Problem	Possible Causes	Solution
Poor Cooling Performance	Temperature setting may be higher than ambient room temperature	Lower the temperature setting
	The heat exchanger on the indoor or outdoor unit is dirty	Clean the affected heat exchanger
	The air filter is dirty	Remove the filter and clean it according to instructions
	The air inlet or outlet of either unit is blocked	Turn the unit off, remove the obstruction and turn it back on
	Doors and windows are open	Make sure that all doors and windows are closed while operating the unit
	Excessive heat is generated by sunlight	Close windows and curtains during periods of high heat or bright sunshine
	Too many sources of heat in the room (people, computers, electronics, etc.)	Reduce amount of heat sources
	Low refrigerant due to leak or long-term use	Check for leaks, re-seal if necessary and top off refrigerant
The unit is not working	Power failure	Wait for the power to be restored
	The power is turned off	Turn on the power
	The fuse is burned out	Replace the fuse
	Remote control batteries are dead	Replace batteries
	The Unit's 3-minutes protection has been activated	Wait three minutes after restarting the unit
	Timer is activated	Turn timer off
The unit starts and stops frequently	There is too much or too little refrigerant in the system	Check for leaks and recharge the system with refrigerant.
	Incompressible gas or moisture has entered the system.	Evacuate and recharge the system with refrigerant
	System circuit is blocked	Determine which circuit is blocked and replace the malfunctioning piece of equipment
	The compressor is broken	Replace the compressor
	The voltage is too high or too low	Install a manostat to regulate the voltage
Poor heating performance	The outdoor temperature is extremely low	Use auxiliary heating device
	Cold air is entering through doors and windows	Make sure that all doors and windows are closed during use
	Low refrigerant due to leak or long-term use	Check for leaks, re-seal if necessary and top off refrigerant
Indicator lamps continue flashing Error code appears and begins with the letters as the following in the window display of indoor unit: • E(x), P(x), F(x) • EH(xx), EL(xx), EC(xx) • PH(xx), PL(xx), PC(xx)	The unit may stop operation or continue to run safely. If the indicator lamps continue to flash or error codes appear, wait for about 10 minutes. The problem may resolve itself. If not, disconnect the power, then connect it again. Turn the unit on. If the problem persists, disconnect the power and contact your nearest customer service center.	

NOTE: If the problem persists after performing checks and diagnostics above, turn off your unit immediately and contact an authorized service center.

The design and specifications are subject to change without prior notice for product improvement. Consult with the sales agency or manufacturer for details. Any updates to the manual will be uploaded to the service website, please check for the latest version.

ERROR CODES

Table 7 — Error Codes

DISPLAY	MALFUNCTION AND PROTECTION INDICATION
EC07	ODU fan speed out of control
EC0d	ODU malfunction
EC51	ODU EEPROM parameter error
EC52	ODU coil temp sensor error
EC53	ODU ambient temp sensor error
EC54	COMP. discharge temp sensor error
EC56	IDU coil outlet temp sensor error
ECC1	Other IDU refrigerant sensor detects leakage (multi-zone)
EH00	IDU EEPROM malfunction
EH03	IDU fan speed out of control
EH0A	IDU EEPROM parameter error
EH0b	IDU main control and display boards communication error
EH0E	Water-level alarm malfunction
EH3A	External fan DC bus voltage is too low protection
EH3b	External fan DC bus voltage is too high fault
EH60	IDU room temp. sensor (T1) error
EH61	IDU coil temp. sensor (T2) error
EH62/EH66	Evap coil inlet temp sensor (T2B) open circuit or short circuit
EH65	Evap coil inlet temp. sensor (T2A) open ciruit or short circuit
EHbA	Communication error between indoor unit and external fan module
EHb3	Communication error between wire and master control
EHC1	Refrigerant sensor detects leakage
EHC2	Refrigerant sensor is out of range and leakage is detected
EHC3	Refrigerant sensor is out of range
EL01	IDU & ODU communication error
EL0C	System lacks refrigerant
EL16	Communication malfunction between adapter board and outdoor main board
FHCC	Refrigerant sensor error
FL09	Mismatch between the new and old platforms
PC00	ODU IPM module protection
PC01	ODU voltage protection
PC02	Compressor top (or IPM) temp. protection
PC03	Pressure protection (low or high pressure)
PC04	Inverter compressor drive error
PC0L	Low ambient temp. protection
----	IDUs mode conflict
NOTE: The display will show DF in defrost mode and FC in forced cooling mode. DF and FC are not error codes.	

Table 8 — Leak Detection Error Codes

EHC1	Refrigerant Sensor detects a leak
EHC2	Working condition of the refrigerant sensor is out of range and a leak is detected

If you receive one of the codes in Table 8, call a technician as soon as possible. Don't panic...The unit will go into turbo mode until the error code is cleared. A beeping noise will come from the unit, which is normal. For additional diagnostic information, refer to the Service Manual.

© 2025 Carrier. All rights reserved.

Manufacturer reserves the right to change, at any time, specifications and designs without notice and without obligations.