538T*R
Multi–Zone Ductless System
Sizes 18, 27, 36 and 48

Installation Instructions

NOTE: Read the entire instruction manual before starting the installation.

NOTE: Image for illustration purposes only. Actual model may be slightly different.

TABLE OF CONTENTS

	PAGE
SAFETY CONSIDERATIONS	2
GENERAL	2
PARTS LIST	3
SYSTEM REQUIREMENTS	4
PIPING REQUIREMENTS	4
DIMENSIONS	6
CLEARANCES	10
INSTALLATION GUIDE	11
INSTALLATION TIPS	11
OUTDOOR UNIT INSTALLATION	11
ELECTRICAL DATA	12
CONNECTION DIAGRAMS	13
START–UP	17
OUTDOOR UNIT DIAGNOSTIC GUIDES	17

SAFETY CONSIDERATIONS

Installing, starting up, and servicing air−conditioning equipment can be hazardous due to system pressures, electrical components, and equipment location (roofs, elevated structures, etc.).

Only trained, qualified installers and service mechanics should install, start−up, and service this equipment.

Untrained personnel can perform basic maintenance functions such as cleaning coils. All other operations should be performed by trained service personnel.

When working on the equipment, observe precautions in the literature and on tags, stickers, and labels attached to the equipment.

Follow all safety codes. Wear safety glasses and work gloves. Keep quenching cloth and fire extinguisher nearby when brazing. Use care in handling, rigging, and setting bulky equipment.

Read these instructions thoroughly and follow all warnings or cautions included in literature and attached to the unit. Consult local building codes and current editions of the National Electrical Code (NEC) NFPA 70. In Canada, refer to current editions of the Canadian electrical code CSA 22.1.

Recognize safety information. This is the safety−alert symbol ⚠ . When you see this symbol on the unit and in instructions or manuals, be alert to the potential for personal injury. Understand these signal words: DANGER, WARNING, and CAUTION. These words are used with the safety−alert symbol. DANGER identifies the most serious hazards which **will** result in severe personal injury or death. WARNING signifies hazards which **could** result in personal injury or death. CAUTION is used to identify unsafe practices which **may** result in minor personal injury or product and property damage. NOTE is used to highlight suggestions which **will** result in enhanced installation, reliability, or operation.

⚠ WARNING

ELECTRICAL SHOCK HAZARD

Failure to follow this warning could result in personal injury or death.

Before installing, modifying, or servicing system, main electrical disconnect switch must be in the OFF position. There may be more than 1 disconnect switch. Lock out and tag switch with a suitable warning label.

⚠ CAUTION

EQUIPMENT DAMAGE HAZARD

Failure to follow this caution may result in equipment damage or improper operation.

Do not bury more than 36 in. (914 mm) of refrigerant pipe in the ground. If any section of pipe is buried, there must be a 6 in. (152 mm) vertical rise to the valve connections on the outdoor units. If more than the recommended length is buried, refrigerant may migrate to the cooler buried section during extended periods of system shutdown. This causes refrigerant slugging and could possibly damage the compressor at start−up.

GENERAL

These instructions cover the installation, start−up and servicing of the multi−zone outdoor unit connected to up to five indoor fan coil units. For approved combinations, please refer to the Product Data.

PARTS LIST

Part No.	Name of Part	Qty
1	Oudoor Unit	1
-	Literature package including installation instructions and warranty	1
-	Grommett to help fix the outdoor unit (helps with vibration prevention during operation)	4
-	Drain Hose and Drain Joint	1

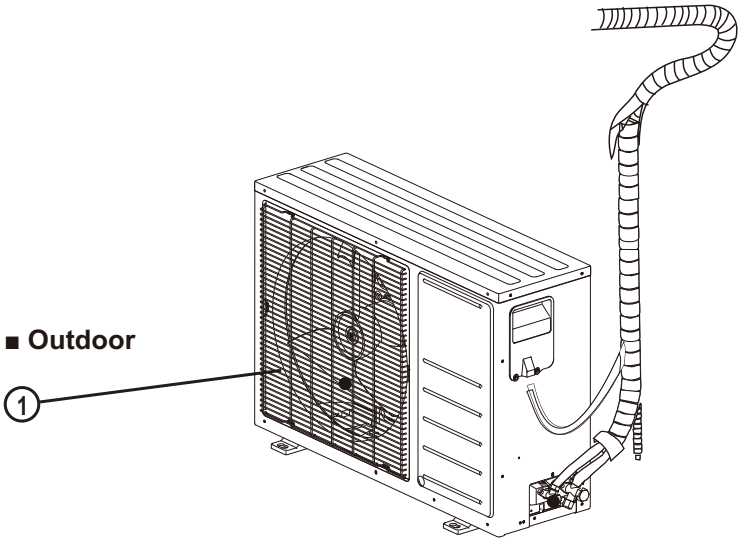

Fig. 1 – Parts List

The following units are covered in these installation instructions.

Table 1—Unit Sizes

SYSTEM TONS	kBTUh	VOLTAGE – PHASE	OUTDOOR MODEL
1.50	18,000	208/230–1	538TEQ018RCMA
2.25	27,000	208/230–1	538TEQ027RDMA
3.00	36,000	208/230–1	538TEQ036RFMA
4.00	48,000	208/230–1	538TEQ048RFMA

SYSTEM REQUIREMENTS

Allow sufficient space for airflow and service of the unit. See Fig. 2 for the required minimum distances between the unit, walls or ceilings.

PIPING REQUIREMENTS

IMPORTANT: **Both refrigerant lines must be insulated separately.**

The minimum refrigerant line length between the indoor and outdoor units is 10 ft. (3 m). The following lengths are allowed.

Table 2—Piping Lengths

SYSTEM SIZE			18K	27K	36K	48K
Piping	Min. Piping Length per each indoor unit	ft (m)	10 (3)	10 (3)	10 (3)	10 (3)
	Standard Piping Length per each indoor unit	ft (m)	25 (7.5)	25 (7.5)	25 (7.5)	25 (7.5)
	Max. outdoor−indoor height difference (OU higher than IU)	ft (m)	32(10)	32(10)	32(10)	32(10)
	Max. outdoor−indoor height difference (IU higher than OU)	ft (m)	49(15)	49(15)	49(15)	49(15)
	Max. height different between indoor units	ft (m)	32(10)	32(10)	32(10)	32(10)
	Max. Length per each indoor unit	ft (m)	66(20)	82(25)	98(30)	98(30)
	Max. Piping Length with no additional refrigerant charge per System (Standard Piping length x No. of Zones)	ft (m)	49(15)	74(22.5)	98(30)	123(37.5)
	Total Maximum Piping Length per system	Ft. (m)	98(30)	147(45)	196(60)	245(75)
	Additional refrigerant charge (between Standard – Max piping length)	Oz/ft (g/m)	0.16(15)	0.16(15)	0.16(15)	0.16(15)
	Gas Pipe Size	in (mm)	3/8*2 (9.52*2)	3/8*2 (9.52*3)	1/2 *1 (12.7*1) + 3/8*3 (9.5*3)	1/2 *2 (12.7*2) + 3/8*3 (9.5*3)
Refrigerant	Liquid Pipe Size	in (mm)	1/4 *2 (6.35*2)	1/4 *3 (6.35*3)	1/4 *4 (6.35*4)	1/4 *5 (6.35*5)
	Refrigerant Type		R410A	R410A	R410A	R410A
	Charge Amount	Lbs (kg)	4.19 (1.9)	6.17 (2.8)	7.94 (3.6)	10.14 (4.6)

NOTE: **The refrigerant charge included is adequate for the outdoor unit's maximum number of zones multiplied by the standard piping length per zone.**

Table 3—Indoor High Wall

	SIZE		9	12	18	24
Indoor High Wall 619P*B	Pipe Connection Size – Liquid	in.	1/4"	1/4"	1/4"	3/8"
	Pipe Connection Size – Suction	in.	3/8"	1/2"	1/2"	5/8"

Table 4—Indoor Cassette

	SIZE		9	12	18
Indoor Cassette 619R*C	Pipe Connection Size – Liquid	in.	1/4"	1/4"	1/4"
	Pipe Connection Size – Suction	in.	3/8"	1/2"	1/2"

Table 5—Indoor Ducted

	SIZE		9	12	18	24
Indoor Ducted 619R*D	Pipe Connection Size – Liquid	in.	1/4"	1/4"	1/4"	3/8"
	Pipe Connection Size – Suction	in.	3/8"	1/2"	1/2"	5/8"

Table 6—Indoor Floor Console

	SIZE		9	12
Indoor Floor Console 619R*F	Pipe Connection Size – Liquid	in.	1/4"	1/4"
	Pipe Connection Size – Suction	in.	3/8"	1/2"

Refrigerant Piping:

Line sets to be sized based on the connection size of the indoor unit. Each pipe should be insulated individually.

Conversion Joints:

The outdoor unit may include a package of conversion joints to facilitate installation of various sizes of fan coils. These joints are to be connected to the outdoor unit as needed to match the line set size.

Table 7—Conversion Joints

No. of ZONES	SIZE	ADAPTOR	QUANTITY
2 zone	18	3/8”––1/2”	2
3 zone	27	3/8”––1/2”	3
4 zone	36	3/8”––1/2”	3
		1/2”––3/8”	1
5 zone	48	1/2”––3/8”	2
		1/4”––3/8”	2
		1/2”––5/8”	2
		3/8”––1/2”	3

Table 8—Additional Refrigerant Charge

UNIT SIZE	No. of ZONES	CHARGE oz. (kg.)	ADDITIONAL CHARGE REQUIRED AFTER ft. (m)	ADDITIONAL CHARGE oz./ft. (g/m)	TOTAL MAX PIPING LENGTH ft. (m.)
18	2	67.02 (1.9)	49 (15)	0.16 (15)	98 (30)
27	3	98.76 (2.8)	74 (22.5)	0.16 (15)	147 (45)
36	4	126.98 (3.6)	98 (30)	0.16 (15)	196 (60)
48	5	162.26 (4.6)	123 (37.5)	0.16 (15)	245 (75)

Additional Refrigerant Calculation

Sum Total Liquid Pipe ft. (m) – Additional Charge Required After ft. (m.) x Additional Charge oz./ft. (g/m) 0.16 (15)

NOTES:

If the calculation results in a negative number no additional refrigerant is required.

ELECTRONIC EXPANSION VALVES IN THE OUTDOOR UNIT ARE USED AS METERING DEVICES.

Wiring

All wires must be sized per NEC (National Electrical Code) or CEC (Canadian Electrical Code) and local codes. Use the Electrical Data table MCA (minimum circuit amps) and MOCP (maximum over current protection) to correctly size the wires and the disconnect fuse or breakers respectively.

Per caution note, only stranded copper conductors with a 600 volt rating and double insulated copper wire must be used. The use of BX cable is not recommended.

Recommended Connection Method for Power and Communication Wiring – Power and Communication Wiring:

The main power is supplied to the outdoor unit. The field supplied 14/3 power/communication wiring from the outdoor unit to the indoor unit consists of four (4) wires and provides the power for the indoor unit. Two wires are high voltage AC power, one is communication wiring and the other is a ground wire.

Recommended Connection Method for Power and Communication Wiring (To minimize communication wiring interference) Power Wiring:

The main power is supplied to the outdoor unit. The field supplied power wiring from the outdoor unit to the indoor unit consists of three (3) wires and provides the power for the indoor unit. Two wires are high voltage AC power and one is a ground wire. To minimize voltage drop, the factory recommended wire size is 14/2 stranded with a ground.

Communication Wiring:

A separate shielded stranded copper conductor only, with a 600 volt rating and double insulated copper wire, must be used as the communication wire from the outdoor unit to the indoor unit. Please use a separate shielded 16GA stranded control wire.

⚠ CAUTION

EQUIPMENT DAMAGE HAZARD

Failure to follow this caution may result in equipment damage or improper operation.

- Wires should be sized based on NEC and local codes.
- Use copper conductors only with a minimum 600 volt rating and double insulated copper wire.

⚠ CAUTION

EQUIPMENT DAMAGE HAZARD

Failure to follow this caution may result in equipment damage or improper operation.

- Be sure to comply with local codes while running wire from indoor unit to outdoor unit.
- Every wire must be connected firmly. Loose wiring may cause terminal to overheat or result in unit malfunction. A fire hazard may also exist. Therefore, be sure all wiring is tightly connected.
- No wire should be allowed to touch refrigerant tubing, compressor or any moving parts.
- Disconnecting means must be provided and shall be located within sight and readily accessible from the air conditioner.
- Connecting cable with conduit shall be routed through hole in the conduit panel.

DIMENSIONS – OUTDOOR

Table 9—Dimensions

UNIT SIZE		18	27	36	48
Height	in (mm)	27.56(700)	31.89(810)	31.89(810)	36.93(1369)
Width	in (mm)	33.27(845)	37.20(945)	37.20(945)	53.9(938)
Depth	in (mm)	12.60(320)	15.55(395)	15.55(395)	15.43(392)
Weight – Net	lbs (kg)	114.63(52)	154.76(70.2)	169.75(77)	255.50(115.9)

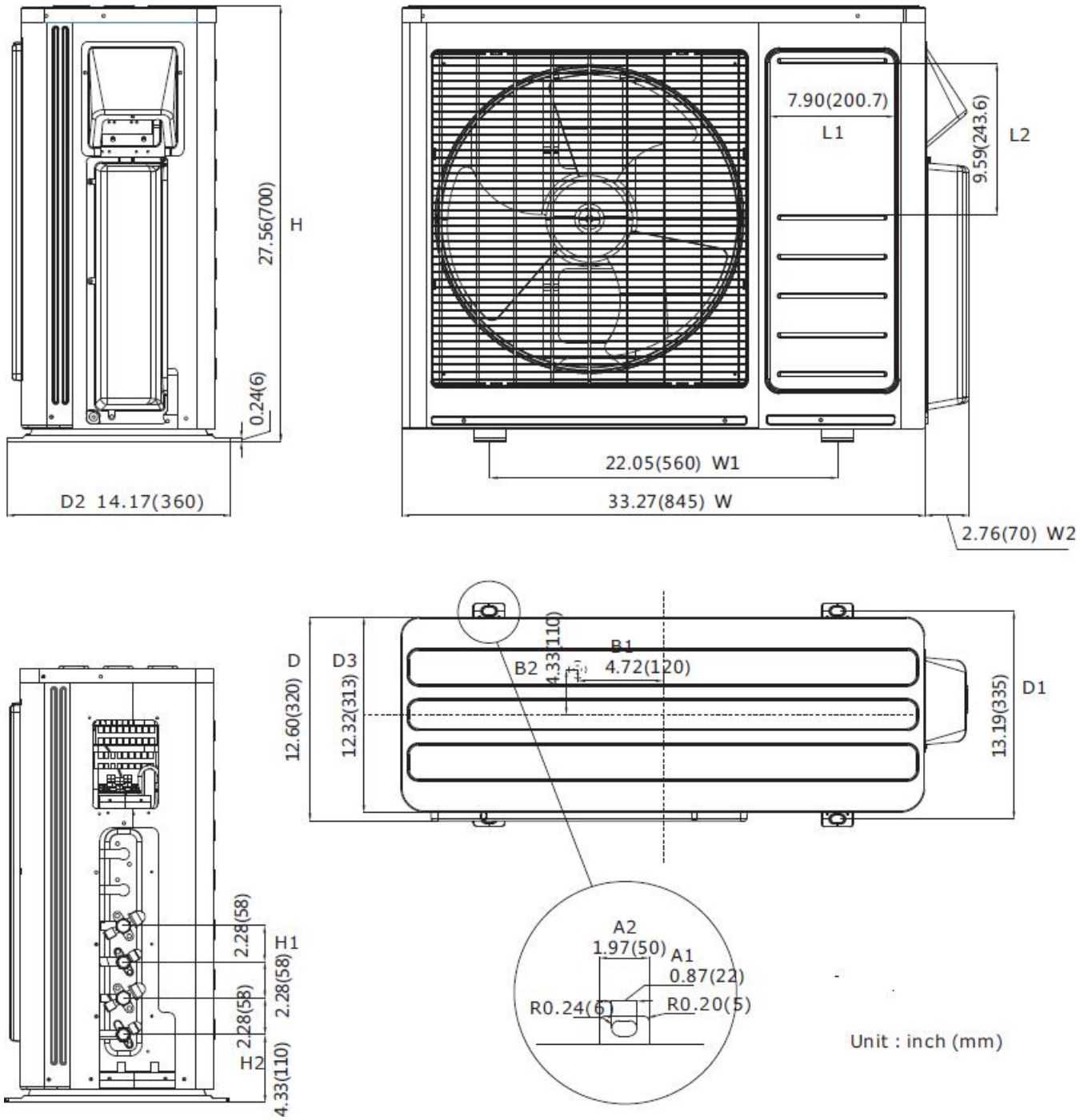

Fig. 2 – Outdoor Dimensions Size 18

NOTE: **No master valves available on Size 18K.**

DIMENSIONS – OUTDOOR (CONTINUED)

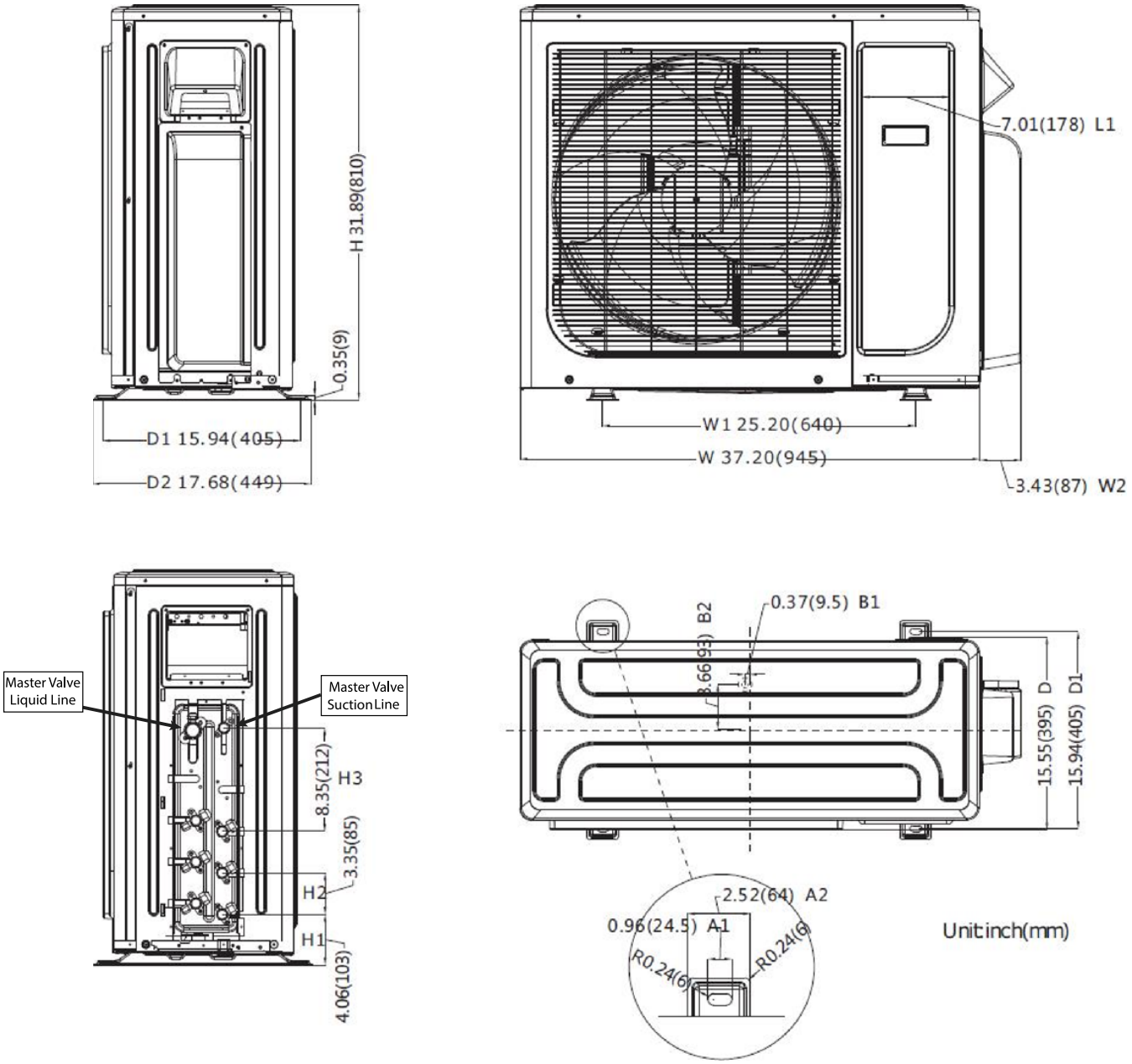

Fig. 3 – Outdoor Dimensions Size 27

DIMENSIONS – OUTDOOR (CONTINUED)

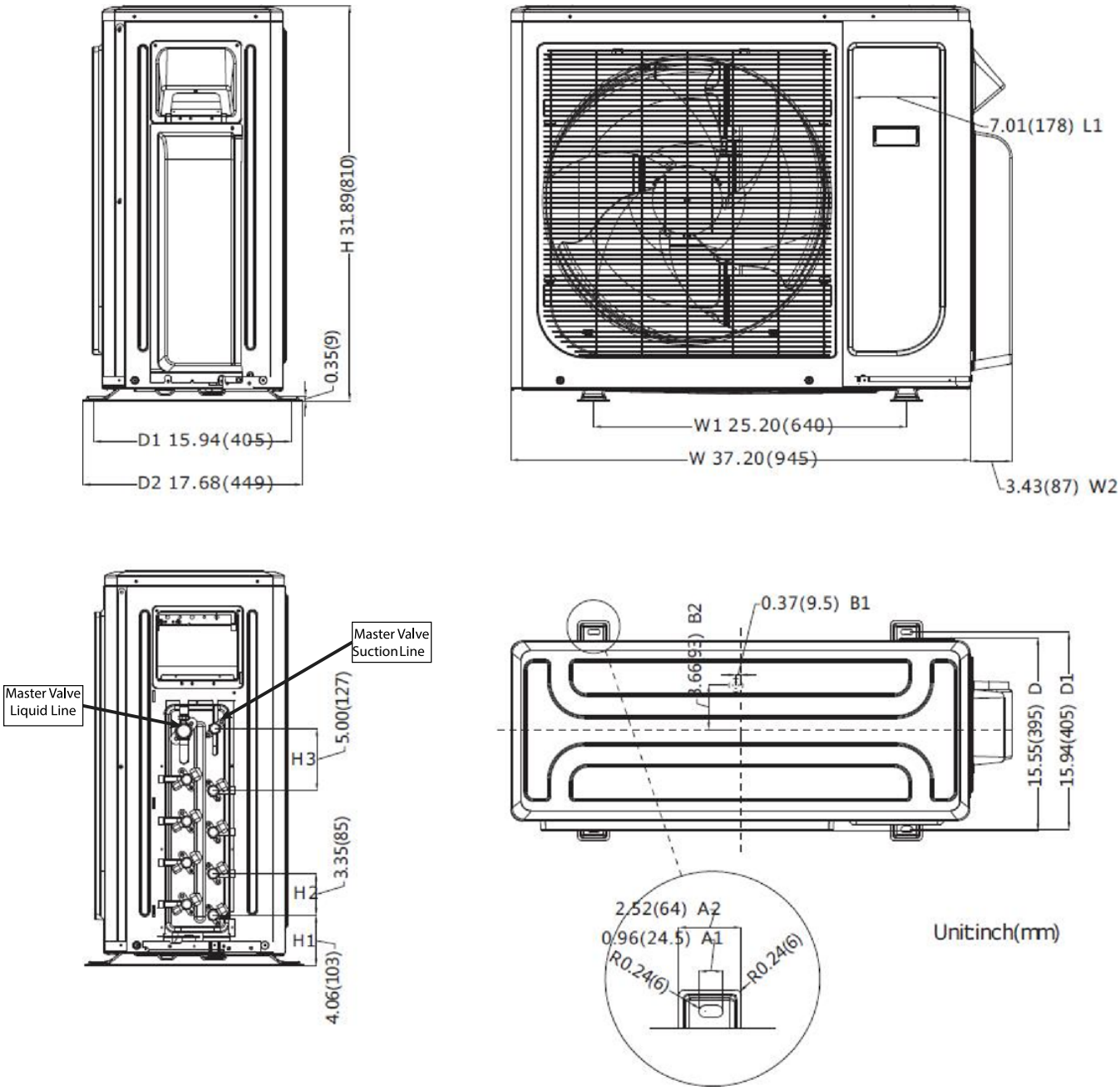

Fig. 4 – Outdoor Dimensions Size 36

DIMENSIONS – OUTDOOR (CONTINUED)

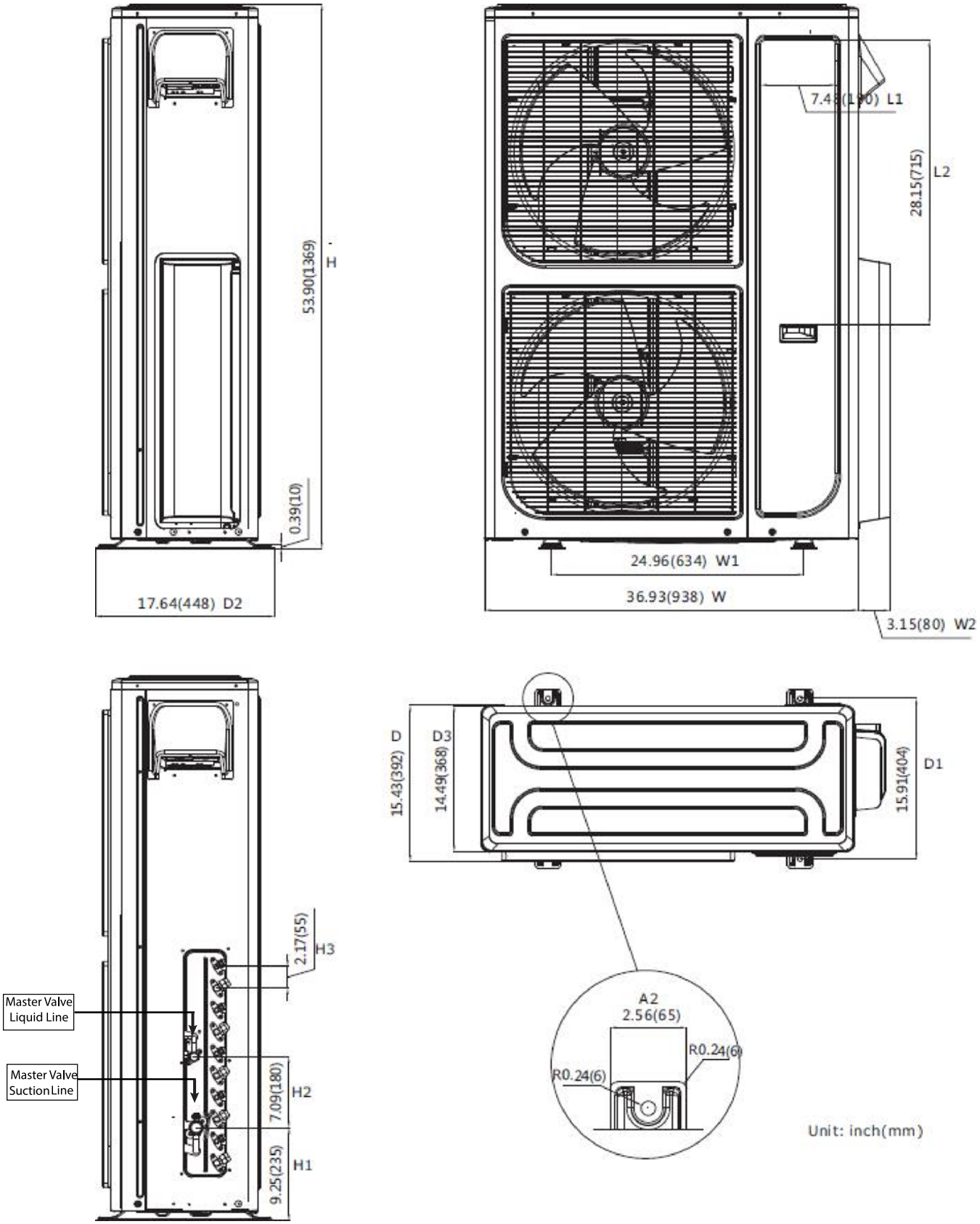

Fig. 5 – Outdoor Dimensions Size 48

CLEARANCES – OUTDOOR

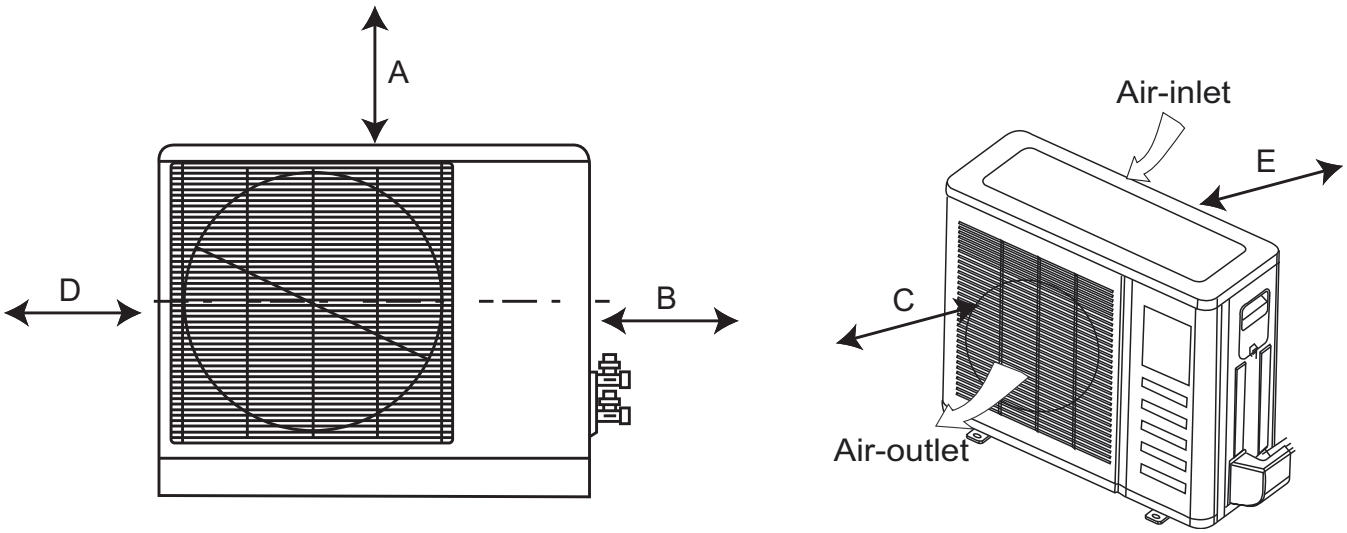

Fig. 6 – Clearances Outdoor

Table 10— Clearances Outdoor Values

UNIT	MINIMUM VALUE in. (mm)
A	24 (609)
B	24 (609)
C	24 (609)
D	4 (101)
E	4 (101)

INSTALLATION GUIDE

Up to five fan coil units can be connected to one outdoor unit. Refer to the Product Data for approved combinations.

INSTALLATION TIPS

Ideal installation locations include:

Outdoor Unit

- A location which is convenient to installation and not exposed to strong wind.
- A location which can bear the weight of the outdoor unit and where the outdoor unit can be mounted in a level position.
- A location with appropriate clearances as outlined in Fig. 6.
- Do not install the indoor or outdoor units in a location with special environmental conditions. For those applications, contact your Ductless representative.

OUTDOOR UNIT INSTALLATION

1. Use a rigid base to support unit in a level position.
2. Locate outdoor unit and connect piping and wiring.

⚠ CAUTION

EQUIPMENT DAMAGE HAZARD

Failure to follow this caution may result in equipment damage or improper operation.

Excessive torque can break flare nut depending on installation conditions.

NOTE: Install the outdoor unit on a rigid base to reduce noise levels and vibration. Determine the optimal air outlet direction to prevent discharged air from being blocked. If the installation site is exposed to strong winds such as a coastal areas, ensure the fan's proper operation by installing the unit lengthwise along the wall or use dust or shield plates. If the unit needs to be suspended, the installation bracket should comply with the suspension requirements in the installation bracket diagram. The installation wall should be solid brick, concrete or the same intensity construction, or take steps to reinforce and dampen the support. The connection between the bracket and the wall as well as the bracket and the air conditioner should be firm, stable and reliable. Ensure there is no obstacle which may block the radiating air.

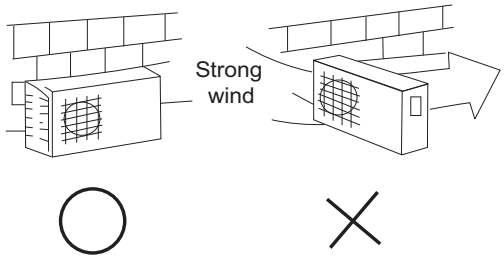

A07350

Fig. 7 — High Wind Installation

MAKE REFRIGERANT PIPING CONNECTIONS (OUTDOOR UNIT)

IMPORTANT: Use refrigeration grade tubing ONLY. No other type of tubing may be used. Use of other types of tubing **will void** the manufacturer's warranty.

Piping Guide:

- Do not open service valves or remove protective caps from tubing ends until all the connections are made.
- Bend tubing with bending tools to avoid kinks and flat spots.
- Keep the tubing free of dirt, sand, moisture, and other contaminants to avoid damaging the refrigerant system.
- Avoid sags in the suction line to prevent the formation of oil traps.

Insulate each tube with minimum 3/8–in. (10 mm) wall thermal pipe insulation. Inserting the tubing into the insulation before making the connections saves time and improves installation quality.

1. The unit is equipped with multiple pairs of service valves. Each pair is clearly marked (color and letter) to identify the indoor unit circuits. In the outdoor unit wiring area, each indoor unit interconnecting terminal block is marked (letter) the same as the corresponding pair of service valves. The indoor units must be piped and wired in matched sets (A to A; B to B, etc.).
2. It is not required to use all of the available fan coil connections if the application does not require them at the current time. The system can be expanded at any time.
3. Conversion joints are supplied with the outdoor unit. They are required for certain fan coil combinations. These joints are to be connected to the outdoor unit as needed to match the line set size.
4. Remove the service connection, if provided with the unit.

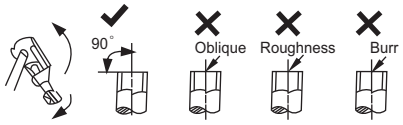

A150767

Fig. 8 — Cut the Pipe

5. Remove all the burrs from the cut cross section of the pipe avoiding any burrs inside the tubes.
6. Remove the flare nuts attached to the indoor and outdoor units.
7. Install the correct size flare nut onto the tubing and make a flare connection. Refer to Table 11 for the flare nut spaces.

Table 11—Flare Nut Spacing

OUTER DIAM. (mm)	A (mm)	
	Max.	Min.
Ø1/4"(6.35)	0.05 (1.3)	0.03(0.7)
Ø3/8"(9.52)	0.06 (1.6)	0.04(1.0)
Ø1/2"(12.7)	0.07 (1.8)	0.04(1.0)
Ø5/8"(15.88)	0.09 (2.2)	0.08(2.0)

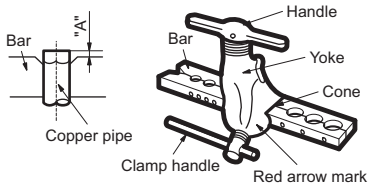

A150768

Fig. 9 — Flare Nut Spacing

8. Apply a small amount of refrigerant oil to the flare connection on the tubing.
9. Align center of the pipes and/or service valve.

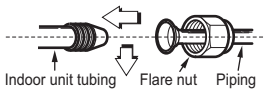

A150769

Fig. 10 — Align Pipe Center

10. Connect both the liquid and gas piping to the indoor unit
11. Tighten the flare nut using a torque wrench as specified in the Table 12.
12. Complete the installation.

Table 12—Tightening Torque

PIPE DIAMETER INCH (mm)	TIGHTENING TORQUE	
	Ft–lb	N–m
Ø1/4" (6.35)	10 to 13	13.6 to 17.6
Ø3/8" (9.52)	24 to 31	32.5 to 42.0
Ø1/2" (12.7)	37 to 46	50.1 to 62.3
Ø5/8" (15.88)	50 to 60	67.7 to 81.3

INSTALL ALL POWER AND INTERCONNECTING WIRING TO OUTDOOR UNIT

1. Mount outdoor power disconnect.
2. Run power wiring from main box to disconnect per NEC and local codes.
3. Remove field wiring cover (if available) from unit by loosening screws.
4. Remove caps on conduit panel.
5. Connect the conduit to the conduit panel (see Fig. 11).
6. Properly connect both power supply and control lines to terminal block per the connection diagram.
7. Ground unit in accordance with NEC and local electrical codes.
8. Use lock nuts to secure conduit.
9. Reinstall field wiring cover.

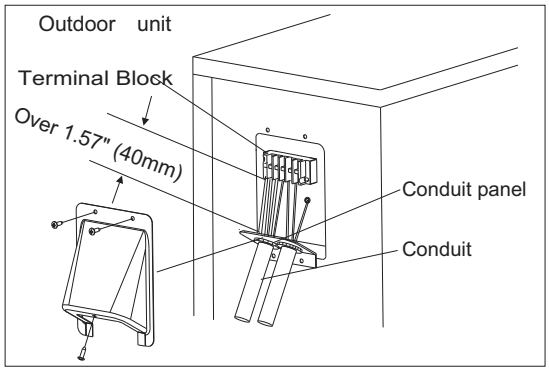

A07455

Fig. 11 – Field Wiring

⚠ CAUTION

EQUIPMENT DAMAGE HAZARD

Failure to follow this caution may result in equipment damage or improper operation.

- Be sure to comply with local codes while running wire from indoor unit to outdoor unit.
- Every wire must be connected firmly. Loose wiring may cause terminal to overheat or result in unit malfunction. A fire hazard may also exist. Therefore, be sure all wiring is tightly connected.
- No wire should be allowed to touch refrigerant tubing, compressor or any moving parts.
- Disconnecting means must be provided and shall be located within sight and readily accessible from the air conditioner.
- Connecting cable with conduit shall be routed through hole in the conduit panel.

ELECTRICAL DATA

Table 13—Multi Zone Outdoor Unit

UNIT SIZE	SYSTEM VOLTAGE	OPERATING VOLTAGE	COMPRESSOR	OUTDOOR FAN			MCA	MAX FUSE/CB AMP
	VOLT / PHASE / HZ	MAX / MIN	RLA	FLA	HP	W		
18	208–230/1/60	253 / 187	9.7	3	0.16	50	15	20
27			8.85	3	0.16	120	19	25
36			13.4	3	0.16	120	27	40
48			13.5	3	0.11	85	29	50

*Permissible limits of the voltage range at which the unit will operate satisfactorily.

LEGEND
FLA - Full Load Amps
MCA - Minimum Circuit Amps
RLA - Rated Load Amps

CONNECTION DIAGRAMS

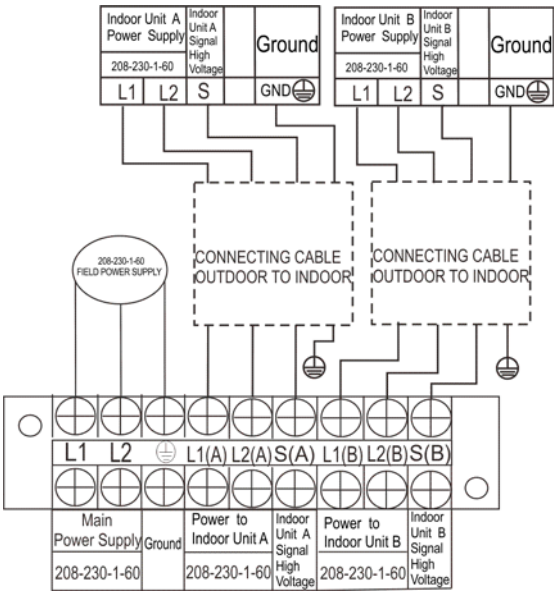

Fig. 12 – Connection Diagram Size 18

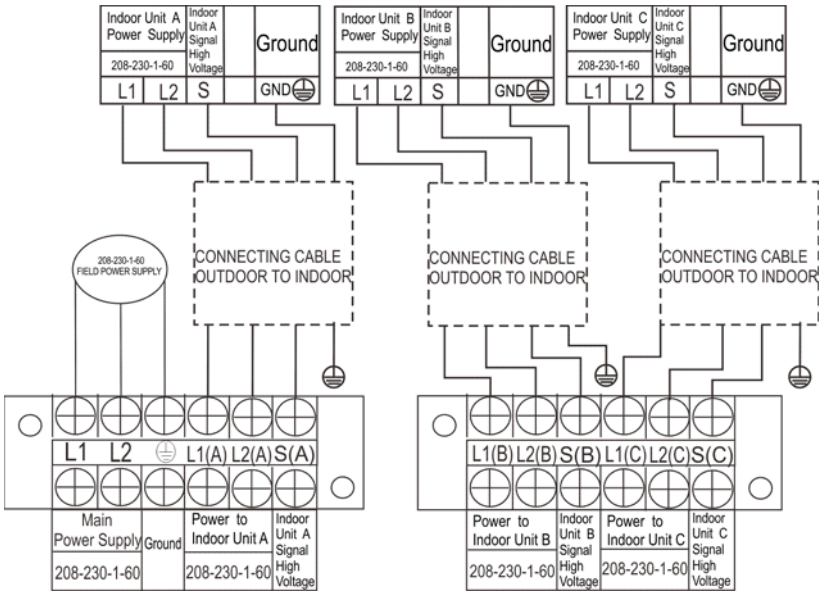

Fig. 13 – Connection Diagram Size 27

CONNECTION DIAGRAMS (CONT)

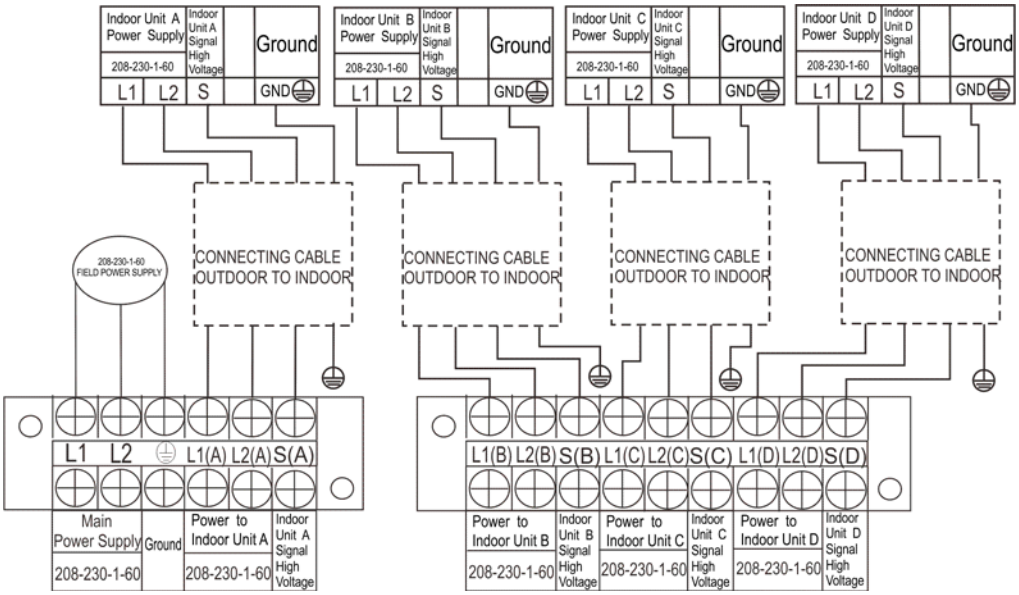

Fig. 14 — Connection Diagram Size 36

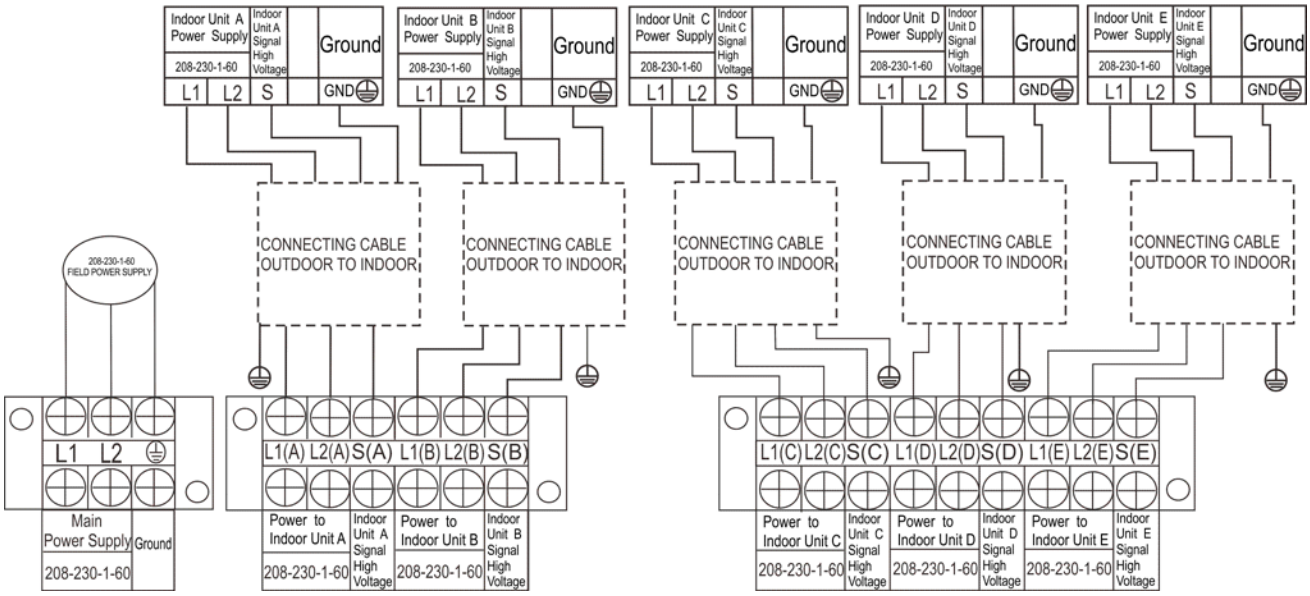

Fig. 15 — Connection Diagram Size 48

Notes:

1. Do not use thermostat wire for any connection between indoor and outdoor units.
2. All connections between indoor and outdoor units must be as shown. **The connections are sensitive to polarity and will result in a fault code.**

DRAIN CONNECTIONS

Install drains must meet local sanitation codes.

Install the outdoor unit drain joint

Fit the seal into the drain joint, then insert the drain joint into the base pan hole of the outdoor unit. Rotate 90° to securely assemble them. Connect the drain joint with an extension drain hose to avoid condensate from draining off the outdoor unit during the heating mode.

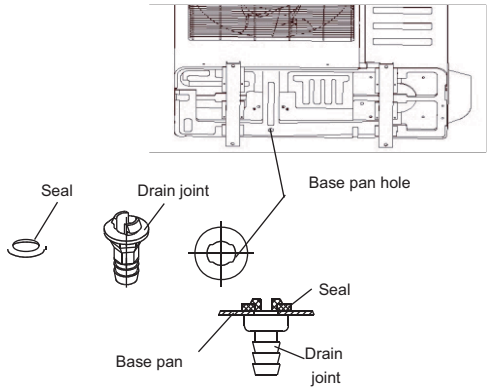

Fig. 16 — Drain Joint

Images are for illustration purposes only.

SYSTEM VACUUM AND CHARGE

⚠ CAUTION

UNIT DAMAGE HAZARD

Failure to follow this caution may result in equipment damage or improper operation.

Never use the system compressor as a vacuum pump.

Refrigerant tubes and indoor coil should be evacuated using the recommended deep vacuum method of 500 microns. The alternate triple evacuation method may be used if the procedure outlined below is followed. Always break a vacuum with dry nitrogen.

NOTE: All units have a Master Suction and Liquid Line Service Valve (excluding the 18,000 BTU unit).

1. Completely tighten the flare nuts A, B, C, D, E. Fully open all circuits service valves, connect the manifold gage charge hose to the charge port of the low side Master service valve to evacuate all circuits at the same time (see Fig. 17).
2. Connect the charge hose to the vacuum pump.
3. Open (fully) the low side of the manifold gage (see Fig. 18).
4. Start the vacuum pump.
5. Evacuate using either deep vacuum or triple evacuation method.
6. After the evacuation is complete, fully close the low side of manifold gage and stop operation of vacuum pump.
7. The factory charge contained in the outdoor unit is good for up to 25 ft. (8 m) of line length. For refrigerant lines longer than 25 ft. (8 m), add refrigerant, up to the allowable length, as specified in the System Requirements section.
8. Disconnect the charge hose from charge connection of the low side service valve.
9. Securely tighten caps of service valves.

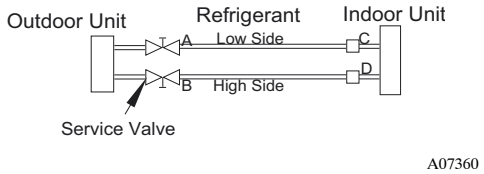

Fig. 17 — Service Valve

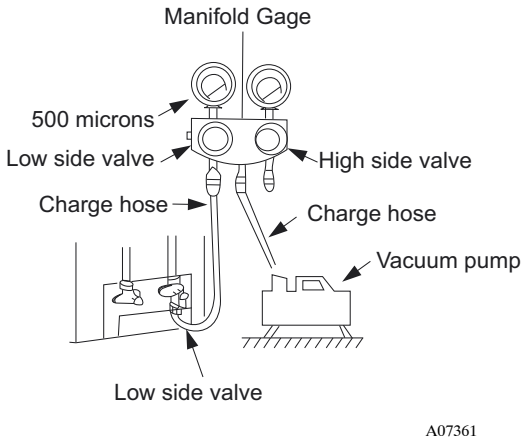

Fig. 18 — Manifold

Deep Vacuum Method

The deep vacuum method requires a vacuum pump capable of pulling a vacuum of 500 microns and a vacuum gage capable of accurately measuring this vacuum depth. The deep vacuum method is the most positive way of assuring a system is free of air and liquid water (see Fig. 19).

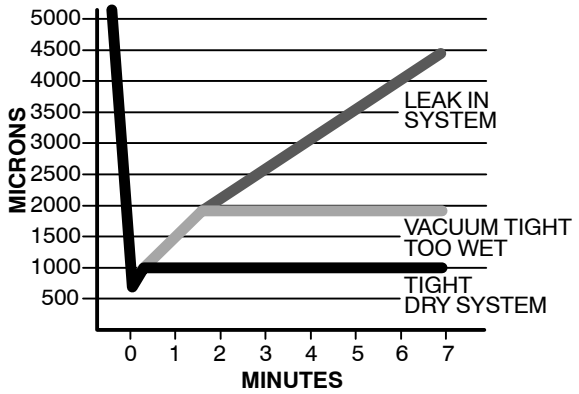

A95424

Fig. 19 — Deep Vacuum Graph

Triple Evacuation Method

The triple evacuation method should only be used when vacuum pump is only capable of pumping down to 28 in. of mercury vacuum and system does not contain any liquid water.

Refer to Fig. 20 and proceed as follows:

1. Pump system down to 28 in. of mercury and allow the pump to continue operating for an additional 15 minutes.
2. Close service valves and shut off vacuum pump.
3. Connect a nitrogen cylinder and regulator to system and open until system pressure is 2 psig.
4. Close service valve and allow system to stand for 1 hr. During this time, dry nitrogen will be able to diffuse throughout the system absorbing moisture.
5. Repeat this procedure as indicated in Fig. 20. System will then be free of any contaminants and water vapor.

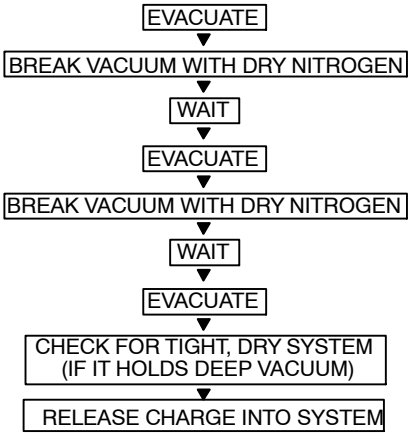

A95425

Fig. 20 — Triple Evacuation Method

Final Tubing Check

IMPORTANT: Check to be certain the factory tubing on both indoor and outdoor unit has not shifted during shipment. Ensure tubes are not rubbing against each other or any sheet metal. Pay close attention to feeder tubes, making sure wire ties on feeder tubes are secure and tight.

START−UP

Test Operation

Perform test operation after completing gas leak and electrical safety check. See the indoor unit installation instructions and owner's manual for additional start up information.

SYSTEM CHECKS

1. Conceal the tubing where possible.
2. Ensure the drain tube slopes downward along its entire length.
3. Ensure all tubing and connections are properly insulated.
4. Fasten tubes to the outside wall, when possible.
5. Seal the hole through which the cables and tubing pass.

OUTDOOR UNIT

1. Are there unusual noises or vibrations during operation?

Explain the Following Items To Customer (with the aid of the Owner's Manual):

2. Explain care and maintenance.
3. Present the Owner's Manual and installation instructions to customer.

OUTDOOR UNIT DIAGNOSTIC GUIDES

This unit has on−board diagnostics. Error codes are displayed on the wired remote controller and the outdoor unit microprocessor board with colored LED lights. Table 14 explains the error codes on both.

Table 14—Outdoor Unit Error Display

DISPLAY	LED STATUS	IDU Error	IDU Error
E0	Outdoor EEPROM malfunction	F4	E6
E2	Communication malfunction between indoor and outdoor units	E1	E2
E3	Communication malfunction between IPM board and outdoor main board	——	——
E4	Open or short circuit of outdoor temperature sensor (T3、T4、T5、T2B)	F2	E6
E5	Voltage protection	P1	P0
E6	PFC module protection	——	——
E8	Outdoor fan speed has been out of control (Only for DC fan motor models)	F5	——
E9	Wrong wiring connection of 24K indoor unit	——	——
F1	No A Indoor unit coil outlet temp. sensor or connector of sensor is defective	——	——
F2	No B Indoor unit coil outlet temp. sensor or connector of sensor is defective	——	——
F3	No C Indoor unit coil outlet temp. sensor or connector of sensor is defective	——	——
F4	No D Indoor unit coil outlet temp. sensor or connector of sensor is defective	——	——
F5	No E Indoor unit coil outlet temp. sensor or connector of sensor is defective	——	——
F6	No F Indoor unit coil outlet temp. sensor or connector of sensor is defective	——	——
P0	Temperature protection of compressor top	P2	P3(P1)
P1	High pressure protection	——	——
P2	Low pressure protection	——	——
P3	Current protection of compressor	——	——(P2)
P4	Temperature protection of compressor discharge	——	——
P5	High temperature protection of condenser	——	——
P6	IPM module protection	P0	E5

©2016 Bryant Heating & Cooling Systems • 7310 W. Morris St. • Indianapolis, IN 46231 Edition Date: 04/16 **Catalog No. II−538TR−03**

Manufacturer reserves the right to discontinue, or change at any time, specifications or designs without notice and without incurring obligations. Replaces: II−538TR−02