AGATWNPUA01A

Twinning Kit for Non-Condensing and Condensing Gas Furnaces with MCT, VCT, FCT or PSC Motors

Installation Instructions

NOTE: Read the entire instruction manual before starting the installation.

TABLE OF CONTENTS

TABLE OF CONTENTS 1
SAFETY CONSIDERATIONS 1
INTRODUCTION 2
DESCRIPTION AND USAGE 5
SECTION 1. 5
DUCT CONNECTIONS - ALL MODELS 5
ELECTROSTATIC DISCHARGE (ESD) PRECAUTION 6
SECTION 2. 6
GENERAL - ALL ORIENTATIONS 6
UPFLOW INSTALLATION 7
DOWNFLOW INSTALLATIONS 8
HORIZONTAL INSTALLATION 8
General 8
Attic Platform Back to Back Installations for Condensing Furnaces and Non-Condensing Furnaces 8
Horizontal Suspended Installation for Condensing Furnaces 9
Horizontal Suspended Installation for Non-Condensing Furnaces 9
Horizontal, Stacked Together for Non-Condensing ONLY 13
SECTION 3. 13
CONNECT ELECTRICAL COMPONENTS 13
TWINNING KIT HARNESS CONNECTIONS 13
CONNECT ELECTRICAL COMPONENTS - COOLING. 17
LEAK DISSIPATION SYSTEM 17
Introduction 17
Connect the Leak Dissipation Control Board 17
Install Power Wire Harness (A2L Leak Dissipation) (from Twinning Kit) 18
THERMOSTAT CONNECTIONS 19
VENTING. 24
GAS SUPPLY PIPING. 24
CONDENSATE DRAIN CONNECTIONS. 24
START-UP AND ADJUSTMENT 24
SEQUENCE OF OPERATION 25
SECTION 4. 26
DISSIPATION SYSTEM OPERATIONAL TEST 26

SAFETY CONSIDERATIONS

⚠ CAUTION

ELECTRICAL SHOCK AND FIRE HAZARD

Failure to follow this warning could result in personal injury, death, and/or property damage.

Turn off the gas and electrical supplies to the furnace and install lockout tag before performing any installation or modification. Follow the operating instructions on the label attached to the furnace.

⚠ WARNING

FIRE, EXPLOSION, ELECTRICAL SHOCK AND CARBON MONOXIDE POISONING HAZARD

Failure to follow this warning could result in personal injury, death and/or property damage.

Improper installation, adjustment, alteration, service, maintenance, or use can cause carbon monoxide poisoning, explosion, fire, electrical shock, other conditions, which could result in personal injury or death. Consult a qualified service agency, local gas supplier, or your distributor or branch for information or assistance. The qualified service agency must use only factory-authorized kits or accessories when modifying this product.

⚠ WARNING

FIRE, EXPLOSION, ELECTRICAL SHOCK AND CARBON MONOXIDE POISONING HAZARD

Failure to follow this warning could result in personal injury, death and/or property damage.

Furnaces shall NOT be twinned (i.e. tandem or staged operation) unless approved in factory technical specifications literature for the furnace. A factory authorized, field-supplied Twinning Kit MUST be used. Consult furnace pre-sale literature for specific models approved for twinning and the correct twinning kit. Twinned furnaces must be installed on both a common supply AND a common return duct system as shown in the Twinning Kit Installation Instructions. Only two furnaces can be twinned on a common supply and return duct system using a factory authorized twinning kit.

Improper installation, adjustment, alteration, service, maintenance, or use can cause explosion, fire, electrical shock, or other conditions which may cause death, personal injury, or property damage. Consult a qualified installer, service agency, or your distributor or branch for information or assistance. The qualified installer or agency must use factory-authorized kits or accessories when modifying this product. Refer to the individual instructions packaged with the kits or accessories when installing.

Follow all safety codes. Wear safety glasses, protective clothing, and work gloves. Have a fire extinguisher available. Read these instructions thoroughly and follow all warnings or cautions include in literature and attached to the unit. Consult local building codes, the current editions of the National Fuel Gas Code (NFGC) NFPA 54/ANSI Z223.1 and the National Electrical Code (NEC) NFPA 70.

In Canada, refer to the current editions of the National Standards of Canada CAN/CSA-B149.1 and .2 Natural Gas and Propane Installation Codes, and Canadian Electrical Code CSA C22.1

Recognize safety information. This is the safety-alert symbol. When you see this symbol on the unit and in instructions or manuals, be alert to the potential for personal injury.

Understand the signal words DANGER, WARNING, and CAUTION. These words are used with the safety-alert symbol. DANGER identifies the most serious hazards which will result in severe personal injury or death. WARNING signifies hazards which could result in personal injury or death. CAUTION is used to identify unsafe practices which may result in minor personal injury or product and property damage. NOTE is used to highlight suggestions which will result in enhanced installation, reliability, or operation.

⚠ CAUTION

CUT HAZARD

Failure to follow this caution may result in personal injury.

Sheet metal parts may have sharp edges or burrs. Use care and wear appropriate protective clothing, safety glasses and gloves when handling parts, and servicing furnaces.

INTRODUCTION

IMPORTANT: This kit now accommodates A2L (R-454B) refrigerant dissipation board connections. If either the main or secondary dissipation system is activated into dissipation mode, both furnaces and both AC systems are impacted by the dissipation control functionality. See the installation manual provided with dissipation control for more details.

⚠ WARNING

Failure to follow this warning could result in personal injury or equipment damage.

When using A2L (R-454B) refrigerant, the Power Wire Harness **must** be used for the agency required leak detection and dissipation system to function properly.

⚠ WARNING

PERSONAL INJURY OR EQUIPMENT DAMAGE HAZARD

Failure to follow this warning could result in dangerous operation, personal injury, death, or property damage.

The Power Wire Harness is only compatible with A2L Dissipation equipment from the same manufacturer of this kit. Do not use A2L Power Wire Harness with other original equipment manufacturer A2L leak detection equipment. See wiring labels and equipment operational checks in section 4 of this document for requirements.

Do NOT use this harness with R-410A refrigerant systems.

This twinning kit permits connection of two multi-speed constant torque (MCT) ECM, variable-speed constant torque (VCT), fixed-speed constant torque (FCT) ECM, or PSC blower motor equipped furnaces controlled by a mechanical thermostat. An electronic User Interface cannot be used and is not approved for twinned furnaces. This furnace twinning kit permits two of the following furnaces of the same size to operate as a single unit on the same duct work. The furnaces must be installed with common supply and return plenums. For upflow installations, the common return plenum or platform must use some or all of the bottom return opening as shown in the DUCT CONNECTIONS section. This kit ensures both furnace blowers operate simultaneously so air flows through the duct work rather than recirculating in a loop between the furnaces.

IMPORTANT: When this kit is installed with A2L (R-454B) cooling systems using the power wire harness provided in this kit, twinned single staged furnaces can only operate as a single unit using a 1-stage thermostat. Staged operation of a 1-stage furnace is not allowed with A2L (R-454B). See THERMOSTAT CONNECTIONS on p19 of this document for details.

When this kit is installed with R-410A cooling systems, twinned single-stage furnaces can operate as a single unit or as staged units. With staged single-stage furnaces, the left-hand furnace is used for first-stage heat, and both furnaces are used for second-stage heat. A field supplied two-stage thermostat is required for staged operation of single-stage furnaces. Staged heating operation of twinned furnaces is permitted only with this twinning kit.

NOTE: As a result of staged heating with single-stage furnaces, the air temperature distribution in the supply plenum may be uneven when only one furnace is heating.

For both R-454B and R-410A cooling systems, twinned two-stage furnaces can only operate as staged units. With the two-stage furnaces, low-heat in both furnaces is used for first-stage heat, and high-heat in both furnaces is used for second-stage heat. Two-stage furnaces can be configured to use a field supplied single-stage thermostat and the furnace control staging algorithm or they can use a field supplied two-stage thermostat to control the staging. Refer to the CONNECT ELECTRICAL COMPONENTS section for two-stage thermostat details.

Cooling units used with twinned furnaces must be single-stage A/C unit(s). Heat pumps cannot be twinned with gas furnaces.

When installing twinned outdoor units with twinned gas furnaces, it is necessary to use a field-supplied 24 VAC pilot-duty relay and a field-supplied 24 VAC/115 VAC transformer as shown in the individual wiring diagrams to prevent overloading furnace 24 VAC/115 VAC transformer.

Table 1 – Twinning Kit Contents

QUANTITY	DESCRIPTION
1	Extension Harness Assembly
1	Main Twinning Harness Assembly
1	Secondary Twinning Harness Assembly
1	Power Wire Harness (A2L Leak Dissipation)
5	Wiring Labels
3	Reference Label
1	Instructions

Table 2 – Condensing Models

90+% Condensing Furnaces				
Single Stage MCT ECM				
59SC6A	916SA	PG96MSAA	(N/R)96MSN	WFSX (Major Series B)
060M17--16	48060M17	48060B	0601716	060B048
080M17--16	48080M17	48080B	0801716	080B048
080M21--20	60080M21	60080C	0802120	080C060
100M21--20	60100M21	60100C	1002120	100C060
120M24--22	66120M24	66120D	1202422	120D066
140M24--22	66140M24	66140D	1402422	140D066

Manufacturer reserves the right to change, at any time, specifications and designs without notice and without obligations.

Table 2 – Condensing Models (Continued)

59SC2E	912SE	PG92MSAA	(N/R)92MSN	WFAX (Major Series B)
060M17--14	42060M17	42060B	0601714	060B042
080M17--16	48080M17	48080B	0801716	080B048
080M21--20	60080M21	60080C	0802120	080C060
100M21--20	60100M21	60100C	1002120	100C060
120M24--20	60120M24	60120D	1202420	120D060

Single Stage VCT ECM		
59SP6B	926SB	N96VSN (Major Series B)
060V17--14	42060V17	0601714
080V17--16	48080V17	0801716
080V21--20	60080V21	0802120
100V21--20	60100V21	1002120
120V24--22	66120V24	1202422

Two Stage VCT ECM					
59TP6C 59TP7A	926TC 927TA	PG96VTAB PG97VTAA	GG96VTAB GG97VTAA	(F,G)96VTN Series B (F,G)97VTN Series A	WFST WFJT
060V17--16	48060V17	48060	48060	0601716	060B048
080V17--16	48080V17	48080	48080	0801716	080B048
080V21--20	60080V21	60080	–	0802120	–
100V21--20	60100V21	60100	60100	1002120	100C060
120V24--22	66120V24	66120	66120	1202422	–

Single Stage PSC										
59SC2 (Series A)	912S (Series A)	PG92SAS	59SC5A	915SA	PG95S_S	N9MSE	N9MSB (Series A)	R9MSB (Series A)	WFAR (Series A)	WFSR
060--10	30060	30060	060-10	30060	30060	0601410	0601412			
060--12	36060	36060	060-14	42060	42060	0601714	0601716	0601716	060B048	060B042
060--14	42060	42060	080-16	48080	48080	0801716	0801716	0801716	080B048	080B048
060--16	48060	48060	080-20	60080	60080	0802120	0802120	–	080C060	080C060
080--16	48080	48080	100-14	42100	42100	1002114	1002116	–	100C048	100C042
080--20	60080	60080	100-16	48100	48100	1002120	1002122	–	–	100C060
100--14	42100	42100	100-20	60100	60100	–	–	–	–	–
100--16	48100	48100	120-20	60120	60120	–	–	–	–	–
100--20	60100	60100	–	–	–	–	–	–	–	–
100--22	66100	66100	–	–	–	–	–	–	–	–
120--20	60120	60120	–	–	–	–	–	–	–	–
120--22	66120	66120	–	–	–	–	–	–	–	–

Single Stage FCT ECM							
59SP5	925S	(F/G)9MXE	59SC5B	915SB	PG95ESAA	(N/R)95ESN	WFSX
060--12	36060	0601412	060E17--14	42060E17	42060B	0601714	060B042
060--14	42060	0601714	080E17--16	48080E17	48080B	0801716	080B048
080--16	48080	0801716	080E21--20	60080E21	60080C	0802120	080C060
080--20	60080	0802120	100E21--20	60100E21	60100C	1002120	100C060
100--16	48100	1002120	120E24--22	66120E24	66120D	1202422	120D066
100--20	60100	1202422	140E24--22	66140E24	66140D	1402422	140D066
120--20	60120	1202422	–	–			
120--22	66120	–	–	–			
59SC2D	**912SD**	**PG92ESAA**	**(N/R)92ESN**	**WFAX**			
060E17--14	42060E17	42060B	0601714	060B042			
080E17--16	48080E17	48080B	0801716	080B048			
080E21--20	60080E21	60080C	0802120	080C060			
100E21--20	60100E21	60100C	1002120	100C060			
120E24--20	60120E24	60120D	1202420	120D060			

Two Stage FCT ECM			
59TP5	925T	PG95X_T	(F/G)9MXT
060--12	36060	36060	0601412
060--14	42060	42060	0601714
080--16	48080	48080	0801716
080--20	48100	48100	0802120
100--16	60080	60080	1002120
100--20	60100	60100	1202422
120--22	66120	66120	1202420

Manufacturer reserves the right to change, at any time, specifications and designs without notice and without obligations.

Table 3 – 80% Non-Condensing Furnaces

Single Stage MCT ECM							
58SC(0/1)	**58SB(0/1)**	**81(0/1)S**	**80(0/1)S**	**PG80MS(A/L)**	**N80MS(N/L)**	**WFE(R/L)**	**R80ES(N/L)**
070M21--16	070M21--16	48070M21	48070M21	48070C	0702116	070C48	0702116
090M21--16	090M21--16	48090M21	48090M21	48090C	0902116	090C48	0902116
090M21--20	090M21--20	60090M21	60090M21	60090C	0902120	090C60	0902120
090M24--20	090M24--20	60090M24	60090M24	60090D	0902420	090D60	0902420
110M21--20	110M21--20	60110M21	60110M21	60110C	1102120	110C60	1102120
110M24--20	110M24--20	60110M24	60110M24	60110D	1102420	110D60	1102420
135M24--20	135M24--20	60135M24	60135M24	60135D	1352420	135D60	1352420
–	155M24--20	60155M24	–	–	–	–	–

Single Stage Ultra Low Nox (ULN)					
58SU0	**830SB**	**PG80MSUA**	**N80MSU**	**WFEU**	**R80MSU**
060M17--16	48060M17	48060	0601716	060B048	0601716
080M21--20	60080M21	60080	0802120	080C060	0802120
100M21--20	60100M21	60100	1002120	100C060	1002120

Single Stage VCT ECM		
58SP(0/1)B	**82(0/1)B**	**N80VSL (B Series)**
070V17--16	48070V17	0701716
090V17--16	48090V17	0901716
090V21--20	60090V21	0902120
110V21--22	66110V21	1102122
135V24--22	66135V24	1352422

Two Stage VCT ECM				
58TP0B/58TP1B	**820TB/821TB**	**PG80VTLB**	**(F/G)80VTL (B Series)**	**WFET**
070V17--16	48070V17	48070B	0701716	070A036
090V17--16	48090V17	48090B	–	–
090V21--20	60090V21	60090C	0902120	–
110V21--22	66110V21	66110C	1102122	110C066
135V24--22	66135V24	66135D	–	–

Single Stage FCT ECM							
58SC(0/1)	**58SB(0/1)**	**81(0/1)S**	**80(0/1)S**	**PG80ES(A/L)**	**N80ES(N/L)**	**WFE(R/L)**	**R80ES(N/L)**
70E21--16	70E21--16	48070E21	48070E21	48070C	0702116	070C48	0702116
90E21--16	90E21--16	48090E21	48090E21	48090C	0902116	090C48	0902116
90E21--20	90E21--20	60090E21	60090E21	60090C	0902120	090C60	0902120
90E24--20	90E24--20	60090E24	60090E24	60090D	0902420	090D60	0902420
110E21--20	110E21--20	60110E21	60110E21	60110C	1102120	110C60	1102120
110E24--20	110E24--20	60110E24	60110E24	60110D	1102420	110D60	1102420
135E24--20	135E24--20	60135E24	60135E24	60135D	1352420	135D60	1352420
–	155E24--20	–	60155E24	60155D	1552420	–	–

Single Stage PSC							
N8MS(N/L)	**58ST(A/X)**	**58DL(A/X)**	**310(A/J)AV**	**311(A/J)AV**	**PG8(M/J)AA**	**WFM(R/L)**	**R8MS(N/L)**
451408	045--08	045--08	024045	024045	024045	045A024	–
451412	045--12	045--12	036045	036045	036045	045A036	451412
701408	070--08	070--08	024070	024070	024070	070A024	–
701412	070--12	070--12	036070	036070	036070	070A036	701412
701716	070--16	070--16	048070	048070	048070	–	–
901714	090--14	090--14	042090	042090	042090	090B042	–
902116	090--16	090--16	048090	048090	048090	090C048	–
902120	090--20	090--20	060090	060090	060090	–	902120
1101712	110--12	110--12	036110	036110	036110	–	–
1102116	110--16	110--16	048110	048110	048110	110C048	–
1102122	110--22	110--22	066110	066110	066110	110C066	1102122
1352116	135--16	135--16	048135	048135	048135	–	–
1352422	135--22	135--22	066135	066135	066135	135D066	–
1552420	155--20	155--20	060155	060155	060155	–	–

Two Stage PSC					
(F/G)8MTL	**(F/G)8MTL**	**58CT(A/X)**	**58CT(A/X)**	**312(A/J)AV**	**312(A/J)AV**
451408	0902120	045-08	090--20	024045	060090
451412	1101712	045-12	110--12	036045	036110
701408	1102116	070-08	110--16	024070	048110
701412	1102122	070-12	110--22	036070	066110
701716	1352116	070-16	135--16	048070	048135
901714	1352422	090-14	135--22	042090	066135
902116	1552420	090-16	155--20	048090	060155

Some sizes are not available for all models shown.

Manufacturer reserves the right to change, at any time, specifications and designs without notice and without obligations.

DESCRIPTION AND USAGE

IMPORTANT: Only the furnace sizes listed in Table 3 can be twinned with this kit. Both furnaces must have the same product number, including heating and cooling sizes, to achieve correct operation. One furnace is the Main furnace and the other furnace is the Secondary furnace. The Main furnace controls the operation of the Secondary furnace. All control connections are made to the Main furnace and Main furnace wiring harness.

Twinned furnaces in these instructions are also referred to as the left-hand furnace (LH) and right hand furnace (RH) or back-to-back.

NOTE: To determine referencing of Left Hand (LH) and Right Hand (RH) furnace:

a. In the Side-by-Side, upflow and downflow applications, reference the furnaces from the front, as you would see them in the upflow application (Fig. 2, Fig. •). The LH furnace is the Main furnace and the RH furnace is the Secondary furnace.

b. In the Back-to-Back, upflow, downflow and horizontal applications, reference the furnaces from the side of the external extension harness. The LH furnace is the Main furnace and the RH furnace is the Secondary furnace, as you would see them in the upflow application (Fig. 1, Fig. •).

Kit contents are shown in Table 1.

NOTE: Refer to the Installation, Start-Up, and Operating Instructions supplied with each furnace for information on venting, clearances, start-up, maintenance, and other information not covered in this manual.

⚠ WARNING

UNIT AND PROPERTY DAMAGE HAZARD

Failure to follow this warning could result in unit and property damage. A non-condensing furnace shall NOT be twinned with a condensing furnace. Two-stage condensing or non-condensing furnaces shall not be twinned with any single-stage furnace. Do not twin furnaces that have a different number of blower motor speed taps together. Furnaces shall only be twinned in the positions shown. Furnaces with variable-speed constant airflow motors (VCA) furnaces shall not be twinned.

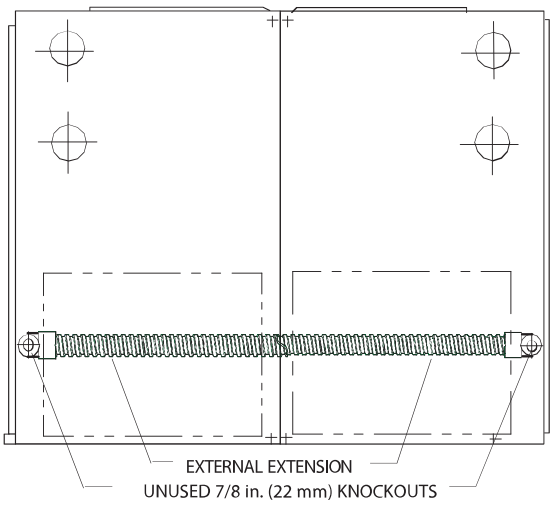

A190244

Fig. 1 – External Extension

SECTION 1

DUCT CONNECTIONS - ALL MODELS

For all furnaces: All furnaces must have a common supply plenum attached to the furnaces or evaporator coils prior to any branch supply trunk or take-off. The height of the plenum should be at least as high (upflow/downflow) or as long (horizontal) as the width of one furnace. Supply air dampers, when used, should be installed in the branch ducts, not in the common plenum. Fire or smoke dampers, when required by code, may be installed in the common plenum. Refer to the damper manufacturer's ratings installation instructions for proper application. The damper should not create undue restriction in the open position.

All furnaces must be installed to ensure sufficient return air to both furnaces:

For upflow furnaces: A combination of one full side of each and bottom inlet plenum or bottom only inlet plenum shall be used for return air to each furnace. The preferred method is to have all return air brought into the bottom of the furnaces through a common bottom plenum. The bottom return-air plenum shall be at least as high as the width of the furnace bottom return-air opening. For example, if two 17 1/2-in. (445 mm) wide furnaces are twinned together, the full height common return air plenum must be at least 17 1/2-in. (445 mm) tall. When there are height limitations, the bottom return-air plenum height can be reduced to 8-in. (203 mm) minimum if one entire side return-air opening of each furnace is used in conjunction with the bottom return opening. The rear of the furnace casing cannot be used for all or part of the return air connection. If rear return air connections are required, connect the return air duct to the rear of the return air plenum. Connect all return trunks or branch return ducts to common return plenum (Fig. 2).

For downflow and horizontal furnaces: All return air must be brought into the bottom opening of the furnace through a common return air plenum. The return-air plenum shall be at least as long (horizontal) or tall (downflow) as the width of the furnace return-air opening. Connect all return trunks or branch return ducts to common return plenum (Fig. •).

NOTE: Throughout these instructions, when the furnace installed side-by-side, the left-hand (LH) side will be referred to as the LH furnace, and the furnace installed on the right-hand (RH) side as the RH furnace. When the furnaces are installed back-to-back, the left-hand (LH) side will be referred to as the LH furnace, and the furnace installed on the right-hand (RH) side as the RH furnace when viewed from the side with the extension harness installed.

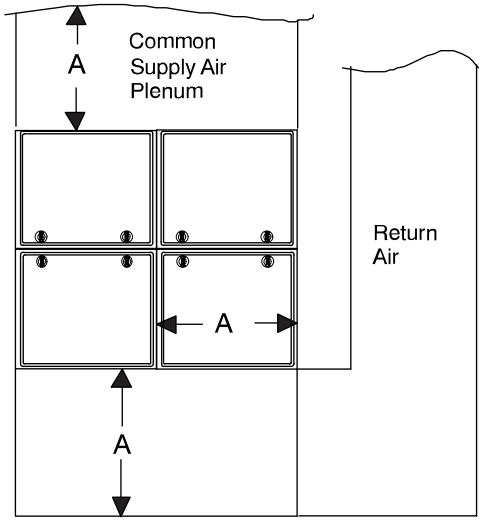

Representative drawing only, some models may vary.

L11F093

NOTE: Upflow - Single Return

Return duct cannot obstruct access to either furnace

Return Air can enter through any combination of:

- Left side only
- Right side only
- Bottom only
- Back of platform when height of platform = Dimension "A" as shown

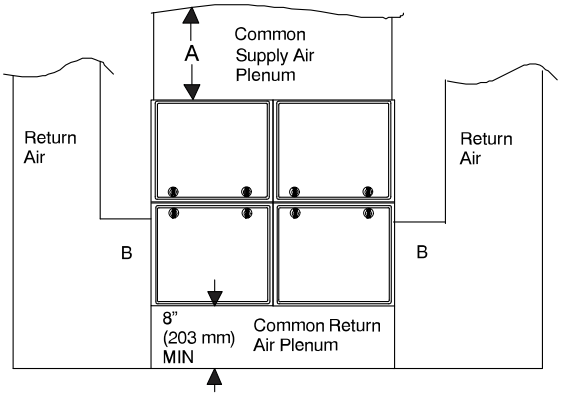

Representative drawing only, some models may vary.

L11F094

NOTE: Upflow - Two Returns

- When furnaces are installed Back-to-Back (not shown) return duct MUST connect to the common return plenum and side inlet of BOTH furnaces
- Return duct cannot obstruct access to either furnace

Fig. 2 – Upflow Ductwork Connections

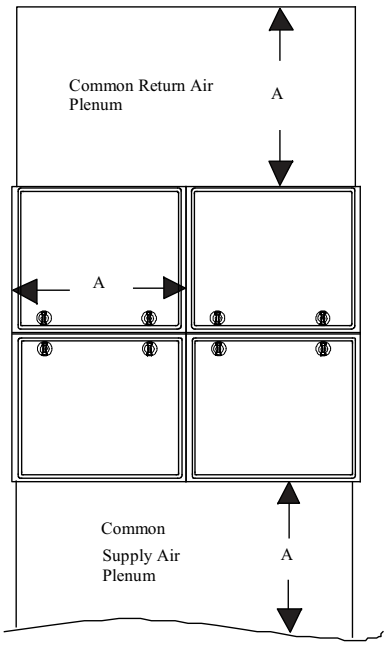

Representative drawing only, some models may vary.

A210136

NOTE: Downflow Application

- Do not connect return air to any side of the furnace
- Connect return air plenum as shown

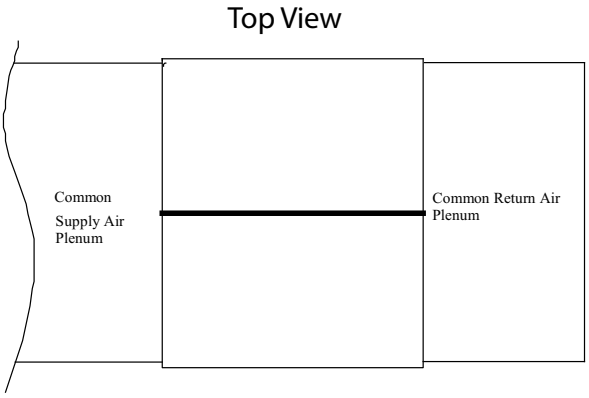

Representative drawing only, some models may vary.

A210137

Fig. 3 – Downflow/Horizontal Ductwork Connections

NOTE: Horizontal Application

- Do not connect return air to any side of the furnace
- Do not stack condensing furnaces on top of each other
- Horizontal stacking only permitted with mid-efficiency furnaces.
- Back-to back, platform or suspended is approved for all models
- For back-to-back installations, Dimension "A" is measured across the front of one furnace, similar to upflow/downflow installations.

ELECTROSTATIC DISCHARGE (ESD) PRECAUTION

⚠ CAUTION

UNIT DAMAGE HAZARD

Failure to follow this caution may result in unit and component damage.

Failure to follow this caution could result in unit and component damage. Electrostatic discharge can affect electronic components. Take Precautions during furnace installation and servicing to protect the furnace electronic control. Precautions will prevent electrostatic discharges from personnel and hand tools which are held during the procedure. These precautions will help to avoid exposing the control to electrostatic discharge by putting the furnace, the control and the person at the same electrostatic potential.

1. Disconnect all power to the furnace. DO NOT TOUCH THE CONTROL OR ANY WIRE CONNECTED TO THE CONTROL PRIOR TO DISCHARGING YOUR BODY'S ELECTROSTATIC CHARGE TO GROUND.
2. Firmly touch a clean, unpainted, metal surface of the furnace chassis which is close to the control. Tools held in a person's hand during grounding will be satisfactorily discharged.
3. After touching the chassis you may proceed to service the control or connecting wires as long as you do nothing that recharges your body with static electricity (for example; DO NOT move or shuffle your feet, DO NOT touch ungrounded objects, etc).
4. If you touch ungrounded objects (recharge your body with static electricity), firmly touch furnace again before touching control or wires.
5. Use this procedure for installed and uninstalled (ungrounded) furnaces.
6. Before removing a new control from its container, discharge your body's electrostatic charge to ground to protect the control from damage. If the control is to be installed in a furnace, follow items 1 through 5 before bringing the control or yourself into contact with the furnace. Put all used AND new controls into containers before touching ungrounded objects.
7. An ESD service kit (available from commercial sources) may also be used to prevent ESD damage.

SECTION 2

GENERAL - ALL ORIENTATIONS

NOTE: ULN furnaces have some specific orientation requirements. See Table 4 below.

Install furnaces

NOTE: Multipoise units can be installed in UPFLOW, DOWNFLOW, or HORIZONTAL configurations.

Table 4 – Ultra Low Nox (ULN) Allowable Orientations

Orientation	80% Non-Condensing
Upflow side-by-side	YES
Upflow back-to-back	YES
Horizontral side-by-side	YES
Horizontal back-to-back	YES
Downflow side-by-side	NO
Downflow back-to-back	YES

Refer to furnace Installation, Start-Up, and Operating Instructions or Product Specifications for appearance and dimensional drawing of twinned furnaces and their connection locations.

NOTE: Follow all clearances for combustibles and service as shown in the individual furnace installation instructions

1. Select two identical heating and airflow furnaces. (See Table 3 or Table 4)
2. Remove bottom closure panels from both furnaces. (See Fig. 5)
   a. Remove main and blower access doors.
   b. Remove screws from front filler panel.
   c. Rotate front filler panel downward to remove.
   d. Remove bottom closure panel and set aside.
   e. Reinstall front filler panel and bottom closure panel (when used)

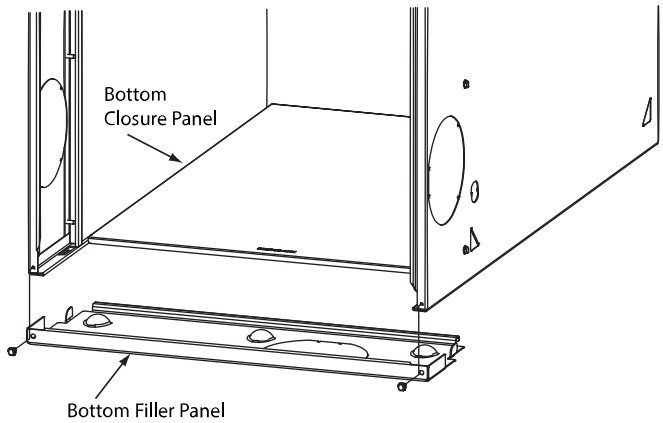

A10273

Fig. 4 – Removing Bottom Closure Panel for Non-Condensing Furnaces

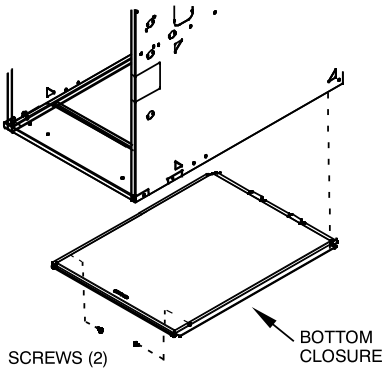

Representative drawing. Models may vary.

1. Lay furnace on the back or side
2. Remove the two (2) screws that secure the bottom closure panel to the furnace casing and remove the panel

A170123

Fig. 5 – Removing Bottom Closure Panel for Condensing Furnaces

3. Apply two factory-supplied foam strips to mating side of one furnace. Locate strips equal distance from top and bottom as shown in Fig. 6.
4. Refer to the appropriate orientation to install the furnaces.

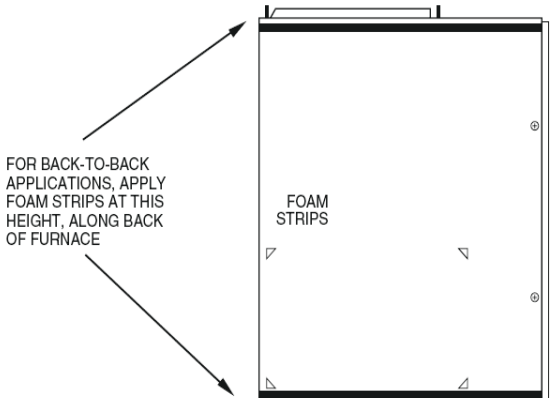

A10274

Fig. 6 – Location of Foam Strips

UPFLOW INSTALLATION

NOTE: When the furnaces are positioned back-to-back, the external extension harness cannot be used on the same side of the furnace that the return air ducts connect to. Locate harness on opposite side of furnace where return air is used.

1. Remove the 7/8-in. (22 mm) knockout in the mating side of each furnace blower compartment. Remove one right side knockout from one furnace and the left side knockout from the other furnace. The furnace with the right side knockout removed will become the Main furnace in side-by-side applications. In back-to-back applications, either furnace can be the Main furnace.
2. For side-by-side applications insert one snap bushing through each 7/8-in. (22 mm) knockout.
3. Position furnaces against each other on common return-air plenum (Fig. 2). For side-by-side installations, adjust and shim each furnace to align 7/8-in. (22 mm) knockout in blower compartment, which will be used for wire routing between furnaces.
4. Drill two 1/8-in. (3 mm) holes, approximately 1-in. (25 mm) below discharge air flange, from inside top of discharge opening and through both furnaces (Fig. 7).
5. Drive 1 factory-supplied No. 6 x 3/4-in. (19 mm) LG screw through each hole and tighten until furnaces are secure and foam strips have sealed gap between furnaces.
6. Bend or remove flanges on supply air outlet of furnace as shown in furnace installation instructions.
7. Install indoor coil(s) and/or common supply plenum on supply air outlet of furnace. Seal all duct connections to furnace with code approved tape or sealant.
8. Connect common return plenum on furnace. Seal all duct connections to furnace with code approved tape or sealant.

⚠ WARNING

UNIT DAMAGE AND FIRE HAZARD

Failure to follow this warning could result in unit damage, fire, personal injury or death.

DO NOT use the back of the furnace for return-air duct connections as limit cycling will occur.

9. Refer to the furnace installation instructions to complete the remaining furnace installation.

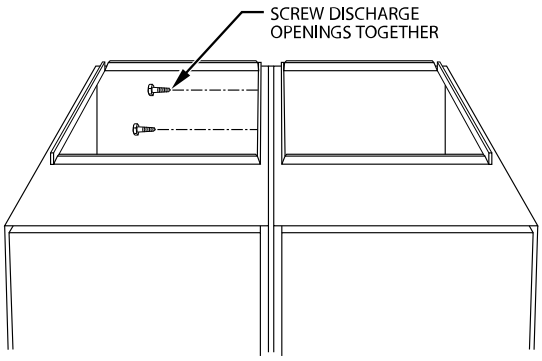

A93539

Fig. 7 – Furnaces Together at Discharge Opening

DOWNFLOW INSTALLATIONS

NOTE: When the furnaces are positioned back-to-back, the external extension harness cannot be used on the same side of the furnace that the return air ducts connect to. Locate harness on opposite side of furnace where return air is used.

1. Remove the 7/8-in. (22 mm) knockout in the mating side of each furnace blower compartment. Remove one right side knockout from one furnace and the left side knockout from the other furnace. The furnace with the right side knockout removed will become the Main furnace in side-by-side applications. In back-to-back applications, either furnace can be the Main furnace.
2. Insert one snap bushing through each 7/8-in. (22 mm) knockout.
3. Bend or remove flanges on supply air outlet of furnace as shown in furnace installation instructions
4. Position furnaces in the downflow position on the entering air-side of indoor coils and or common supply plenum. If no approved cased indoor coil is used, install the furnaces on accessory combustible floor bases. For side-by-side installations, adjust and shim each furnace to align unused 7/8-in. (22 mm) knockout in blower compartment, which will be used for wire routing between furnaces.
5. Drill two 1/8-in. (3 mm) holes, approximately 1-in. (25 mm) below return air flange, from inside top of return air opening and through both furnaces (Fig. 8).
6. Drive 1 factory-supplied No. 6 x 3/4-in. (19 mm) LG screw through each hole and tighten until furnaces are secure and foam strips have sealed gap between furnaces.
7. Connect common return plenum to furnaces. Seal all duct connections to furnace with code approved tape or sealant.

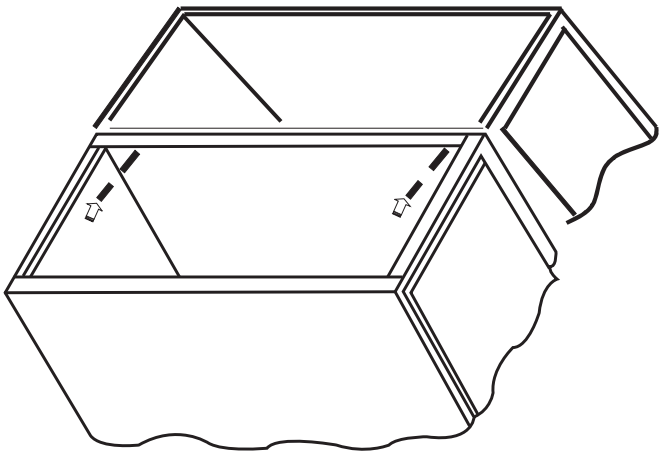

A02219

Fig. 8 – Attaching Furnaces Together at Return Air Opening

WARNING

UNIT DAMAGE AND FIRE HAZARD

Failure to follow this warning could result in unit damage, fire, personal injury or death.

DO NOT use the back or side of the furnace for return-air duct connections as limit cycling will occur.

8. Follow individual furnace installation instructions for downflow applications. This includes, but not limited to: condensate trap, condensate/inducer housing tubing, pressure switch tubing venting and electrical connections.
9. Go to CONNECT ELECTRICAL COMPONENTS on p13.

HORIZONTAL INSTALLATION

General

When twinning furnaces in the horizontal position, consideration must be made to the type of building construction. Attic floors should be constructed to support normal live and dead loads of the furnaces and the person(s) servicing them.

Trusses, wood and metal are engineered for specific applications, and may not support the weight of two (2) furnaces suspended from the top chords or by the bottom chords of the trusses. Long horizontals spans may flex or sag, resulting in damage to the building. Contact the truss manufacturer for additional design and engineering assistance.

Do not suspend furnaces with straps or suspend furnaces from roof decking. Allow a minimum of 2-in. (51 mm) clearance below the unit for condensate drain connections.

Attic Platform Back to Back Installations for Condensing Furnaces and Non-Condensing Furnaces

1. Construct a platform from 3/4-in. (19 mm) (nominal plywood), extending out 30 inches (762 mm) from the front of each furnace (Fig. 9 thru Fig. 11).
2. Maintain all clearances to combustibles per the furnace Installation, Start-up and Operating Instructions.
3. Follow all additional building codes.
4. Long truss spans may require additional support along the bottom chord of the truss. Consult the truss manufacturer's guidelines for engineering assistance.
5. Long rafter or attic joist spans may require additional support along the bottom of the rafter or joist. Consult local or regional building codes for design and loading requirements.
6. Lay both furnaces in the required orientation with the knockouts in the blower compartment facing upward.
7. Drill two 1/8-in. (3 mm) holes, approximately 1-in. (25 mm) below return air flange, from inside top of return air opening and through both furnaces (Fig. 8).
8. Drive 1 factory-supplied No. 6 x 3/4-in. (19 mm) LG screw through each hole and tighten until furnaces are secure and foam strips have sealed gap between furnaces.
9. Drill two 1/8-in. (3 mm) holes, approximately 1-in. (25 mm) below discharge air flange, from inside top of discharge opening and through both furnaces (Fig. 7).
10. Drive 1 factory-supplied No. 6 x 3/4-in. (19 mm) LG screw through each hole and tighten until furnaces are secure and foam strips have sealed gap between furnaces.
11. Install indoor coil(s) and/or common supply plenum on supply air outlet of furnace. Seal all duct connections to furnace with code approved tape or sealant.

12. Connect common return plenum to furnaces. Seal all duct connections to furnace with code approved tape or sealant.
13. Follow individual furnace installation instructions for horizontal applications. This includes, but not limited to: condensate trap, condensate/inducer housing tubing, pressure switch tubing venting and electrical connections.
14. Go to CONNECT ELECTRICAL COMPONENTS on p13.

WARNING

UNIT DAMAGE AND FIRE HAZARD

Failure to follow this warning could result in unit damage, fire, personal injury or death.

DO NOT use the back or side of the furnace for return-air duct connections as limit cycling will occur.

Horizontal Suspended Installation for Condensing Furnaces

1. Furnaces may be suspended using two (2) pieces of 1-1/2-in. x 1-1/2-in. x 1/4-in. (38 mm x 38 mm x 6 mm) thick cold rolled angle iron underneath each furnace and four (4) 3/8-in. (10 mm) diameter threaded rods. Angle iron must be positioned as shown in Fig. 12.
2. Unistrut or similar material may be used, provided that the furnaces do not sag in the middle or bend or twist at the support ends. The support material must be secured to the bottom of each furnace in a manner similar to securing angle iron to the furnace.
3. Each piece of angle iron must be secured to the bottom of each furnace with at least two (2) No..8 x 3/4-in. (19 mm) sheet metal screws.
4. Drill four 5/16-in. (8 mm) holes through the angle iron and through each side of the casing for the suspension rods as shown in Fig. 12.
5. Lay furnaces back-to-back on a flat surface with 7/8 knock-outs facing upward.
6. Drill two 1/8-in. (3 mm) holes, approximately 1-in. (25 mm) below return air flange, from inside top of return air opening and through both furnaces (Fig. 8).
7. Drive one factory-supplied No. 6 x 3/4-in. (19 mm) LG screw through each hole and tighten until furnaces are secure and foam strips have sealed gap between furnaces.
8. Drill two 1/8-in. (3 mm) holes, approximately 1-in. (25 mm) below discharge air flange, from inside top of discharge opening and through both furnaces (Fig. 7).
9. Drive one factory-supplied No. 6 x 3/4-in. (19 mm) LG screw through each hole and tighten until furnaces are secure and foam strips have sealed gap between furnaces.
10. Insert the 1/4-in. (6 mm) threaded rod through each hole in the furnace and through the angle iron. Secure the threaded rod to the angle iron with a washer, lock washer and nut.
11. To prevent the rod from falling out of the furnace, install a washer, lock washer and nut on portion of the threaded rod above the furnace.
12. Raise and suspend the furnaces using the appropriate lift and secure the threaded rod with the appropriate field-supplied hardware. Use locking hardware such as lock washers and jamb nuts to prevent nuts or bolts from loosening.
13. Install indoor coil(s) and/or common supply plenum on supply air outlet of furnace. Seal all duct connections to furnace with code approved tape or sealant.
14. Connect common return plenum to furnaces. Seal all duct connections to furnace with code approved tape or sealant.
15. Follow individual furnace installation instructions for horizontal applications. This includes, but not limited to: condensate trap, condensate/inducer housing tubing pressure switch tubing venting and electrical connections.
16. Go to CONNECT ELECTRICAL COMPONENTS on p13.

WARNING

UNIT DAMAGE AND FIRE HAZARD

Failure to follow this warning could result in unit damage, fire, personal injury or death.

DO NOT use the back or side of the furnace for return-air duct connections as limit cycling will occur.

Horizontal Suspended Installation for Non-Condensing Furnaces

1. Furnaces may be suspended using two (2) pieces of 1-1/2-in. x 1-1/2-in. x 1/4-in. thick cold rolled angle iron underneath each furnace and four (4) 3/8-in. (10 mm) diameter threaded rods (Fig. 13).
2. Allow for at least 9 inches (228 mm) in front of each door for door removal.
3. Each piece of angle iron must be secured to the bottom of each furnace with at least two (2) No. 8 x 3/4-in. (19 mm) sheet metal screws.
4. Maintain all clearances to combustibles per the furnace Installation, Start-up and Operating Instructions.
5. Unistrut or similar material may be used, provided that the furnaces do not sag in the middle or bend or twist at the support ends. The support material must be secured to the bottom of each furnace in a manner similar to securing angle iron to the furnace.
6. For all horizontal applications: Return air can only be connected to bottom opening of furnace. A common return air plenum is required for proper auxiliary limit switch operation.
7. Apply two factory-supplied foam strips to the back of each furnace. Locate strips equal distance from top and bottom as shown in Fig. 6. Trim off excess material.
8. Determine which side of furnace will be used to route external extension harness. Remove 7/8-in. dia. accessory hole knockouts in blower compartment side selected to attach harness (Fig. 1).
9. Position furnaces back-to-back on attic platform or suspended supports. Adjust and shim each furnace to align both furnaces. Follow all clearance to combustible material.

NOTE: DO NOT lay furnace down flat on the side that external extension harness is installed. Raise furnace up a minimum of 1-1/2 inches (38 mm) above deck so harness does not rub on casing or deck.

10. If furnaces are installed closer than 12 inches above a deck made from combustible material, provide rollout protection as shown in the furnace installation instructions. The bottom closure pan may be used for this purpose.
11. Drill two 1/8-in. holes, approximately 1 in. (25 mm) below discharge flange, from inside top of discharge opening and through both furnaces (Fig. 7). Drill two 1/8-in. holes, approximately 1 in. (25 mm) below return air flange, from inside top of return air opening and through both furnaces (see Fig. 8 as an example).
12. Drive one factory-supplied No. 6 x 3/4-in. LG screw through each hole and tighten until furnaces are secure and foam strips have sealed gap between furnaces.
13. Connect return- and supply-air ducts to furnaces. Seal duct connections to prevent air leakage.
14. Move 115V junction box JB in either furnace from left-hand side to right-hand side if required. Refer to furnace installation instructions for complete details.
15. Go to CONNECT ELECTRICAL COMPONENTS on p13.

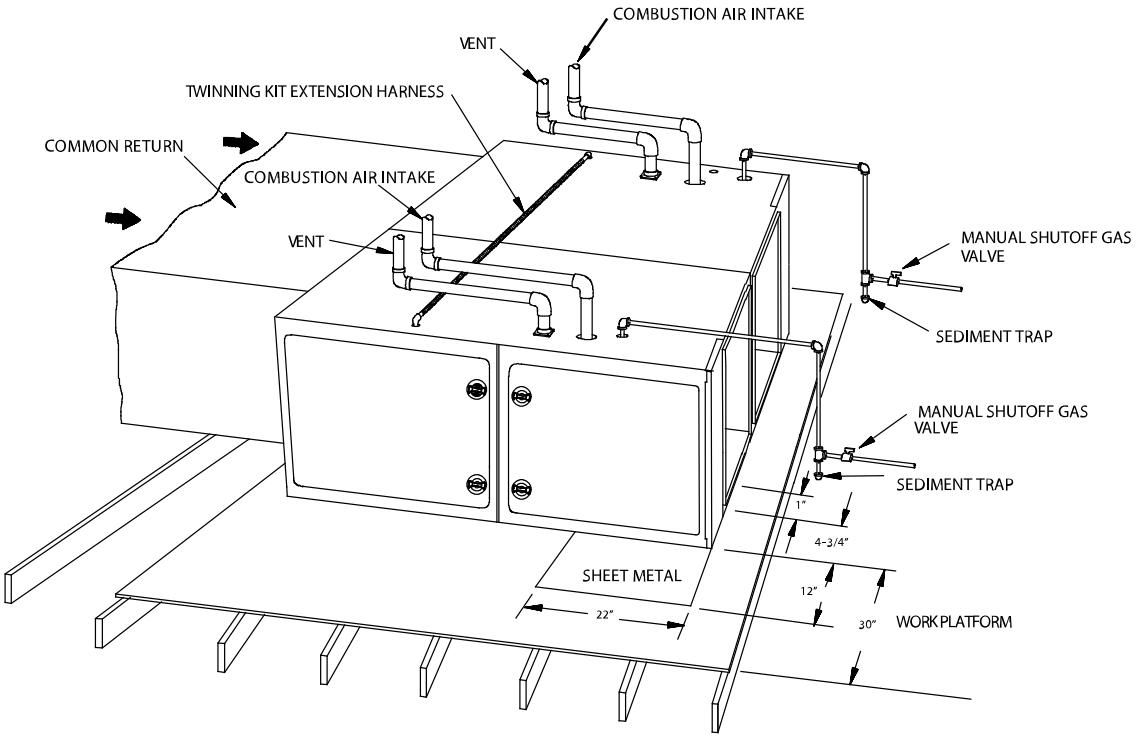

Representative drawing only, some models may vary.

L11F105

Fig. 9 – Attic Installation for Condensing Furnace ONLY

NOTE: Rollout protection required.

Install 12" x 22" (304 x 559 mm) sheet metal in front of and above the burner compartment area. The sheet metal MUST extend above the furnace casing by 1-in. (25 mm with the door removed. A 1-in. (25 mm) clearance minimum between top of furnace and combustible material is required. The entire length of furnace must be supported when furnace is used in horizontal position to ensure proper drainage

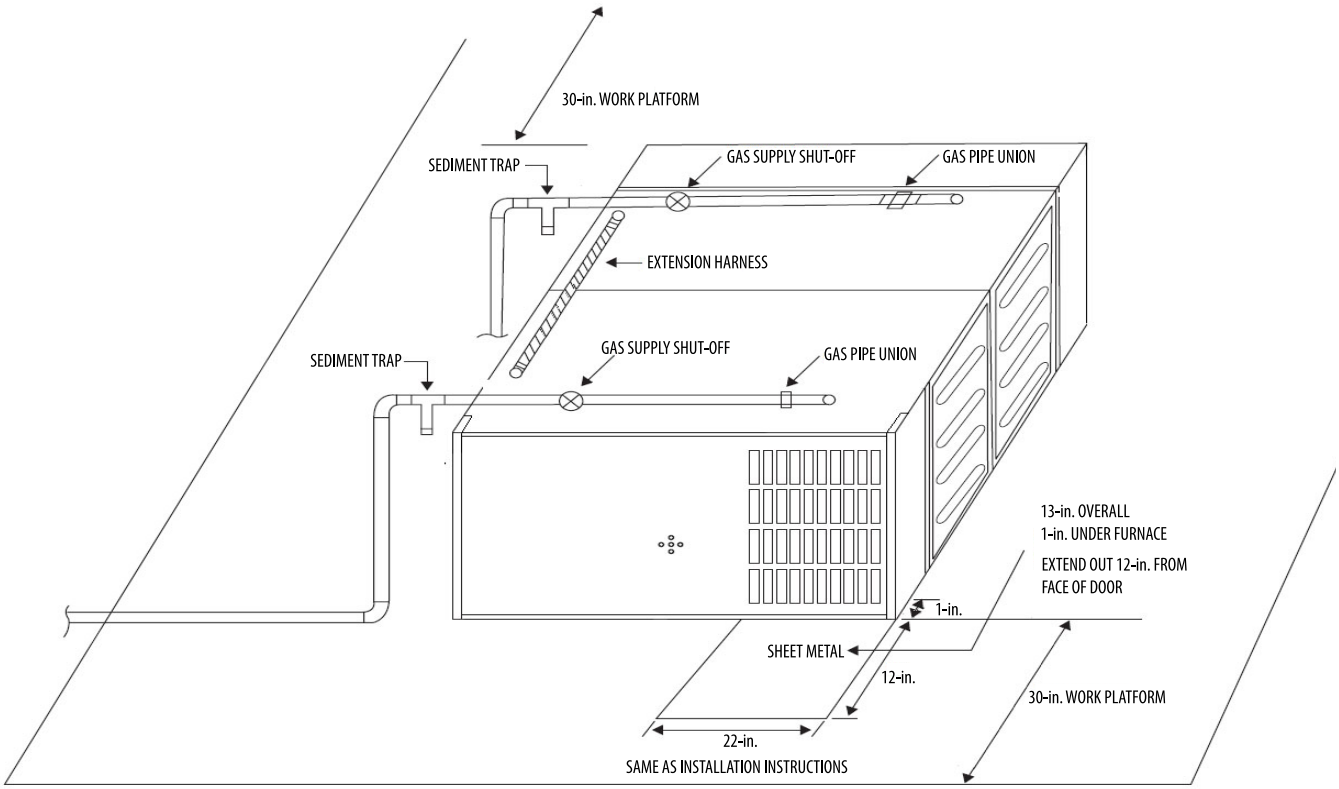

Representative drawing only, some models may vary.

A190218

Fig. 10 – Attic Installation of Non-Condensing Back-to-Back Furnace ONLY

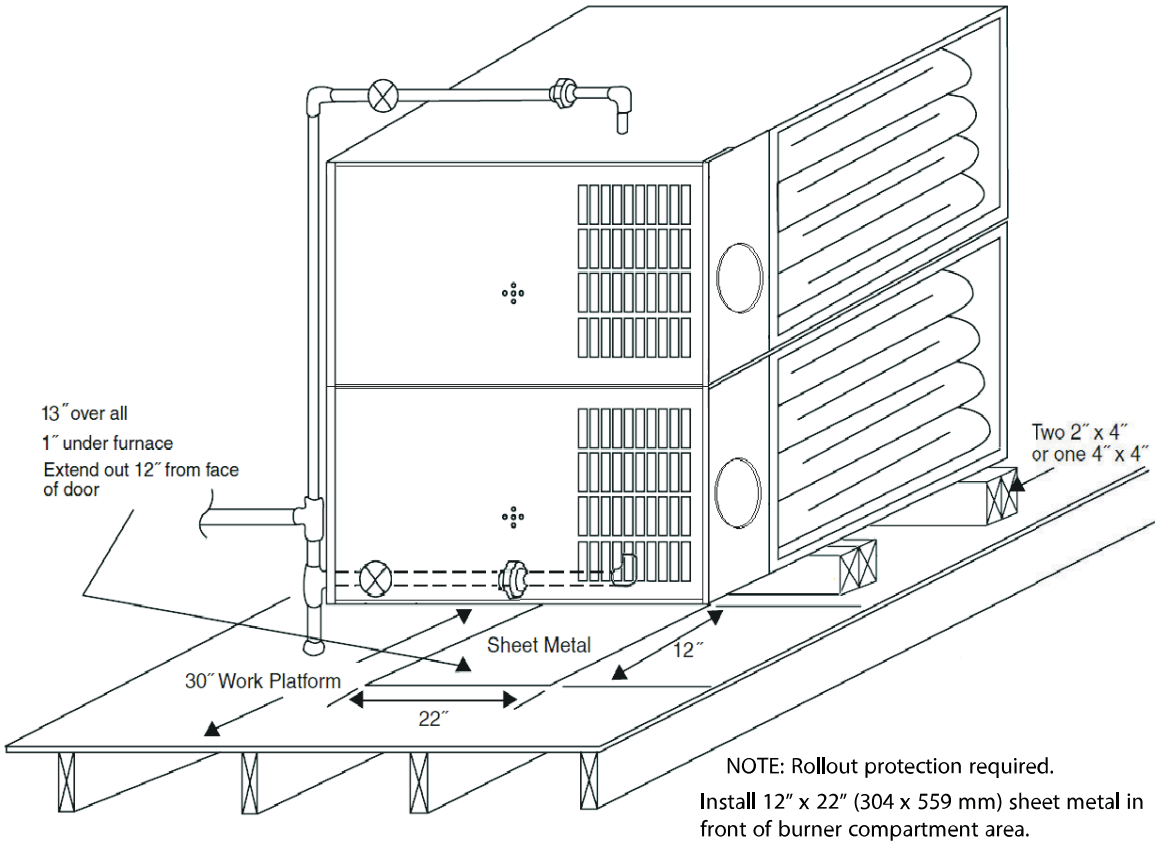

Representative drawing only, some models may vary.

A190217

Fig. 11 – Attic Installation of Non-Condensing Horizontal Furnace Stacked Together ONLY.
NOTE: Rollout protection required.
Install 12" x 22" (304 x 559 mm) sheet metal in front of burner compartment area.

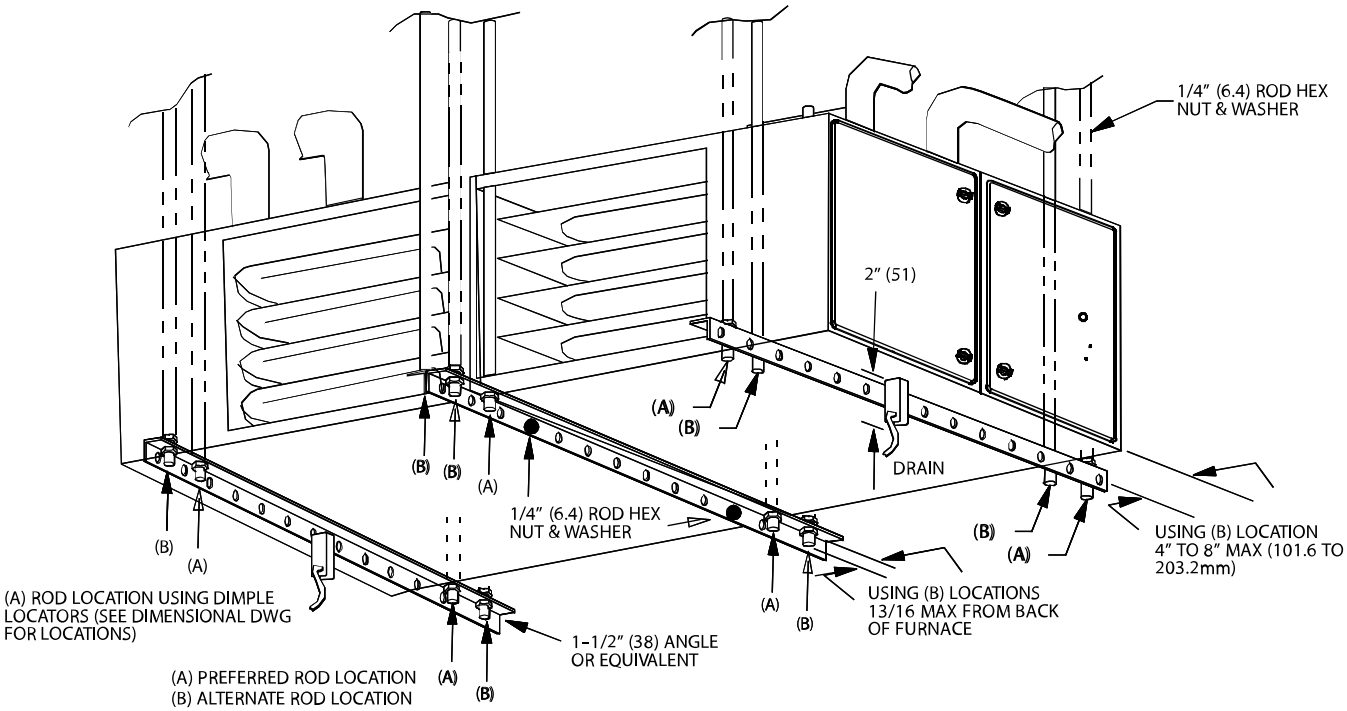

Representative drawing only, some models may vary.

L11F099

Fig. 12 – Suspended Installation for Condensing Furnace ONLY

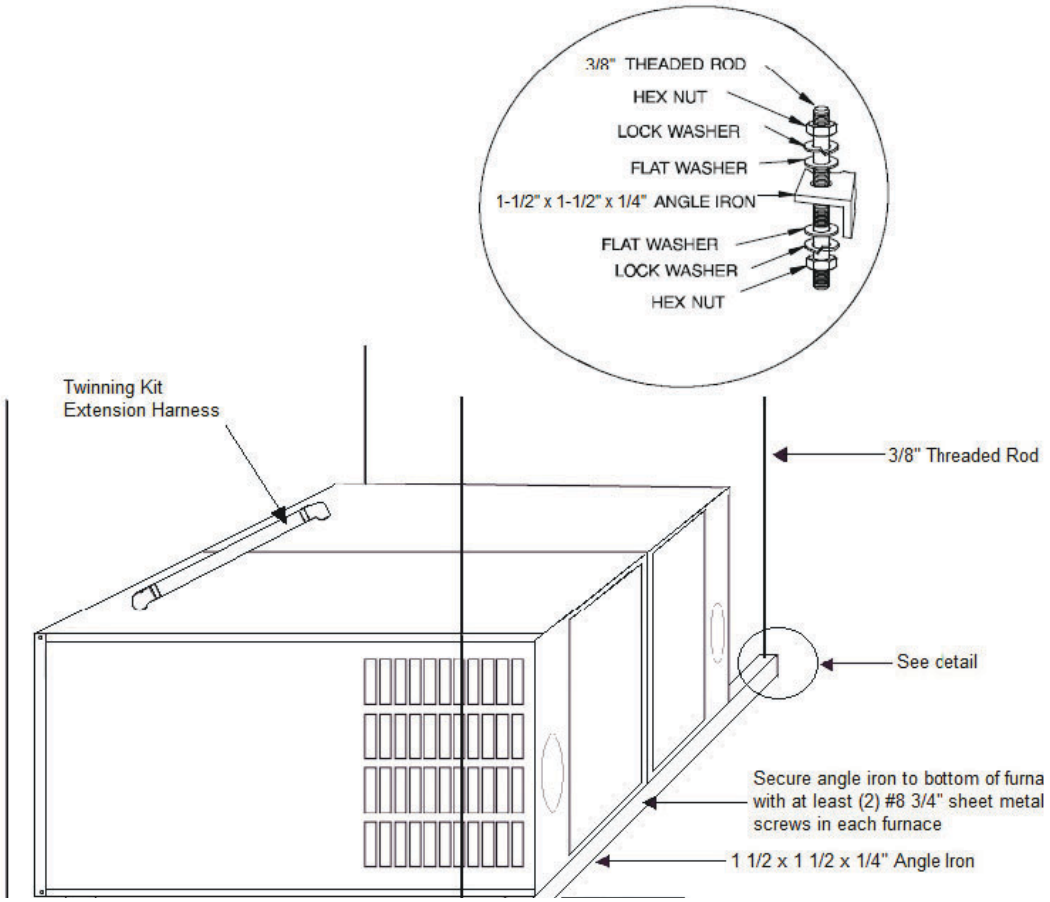

Representative drawing only, some models may vary.

A190232

Fig. 13 – Suspended Back-to-Back Non-Condensing Furnaces ONLY.

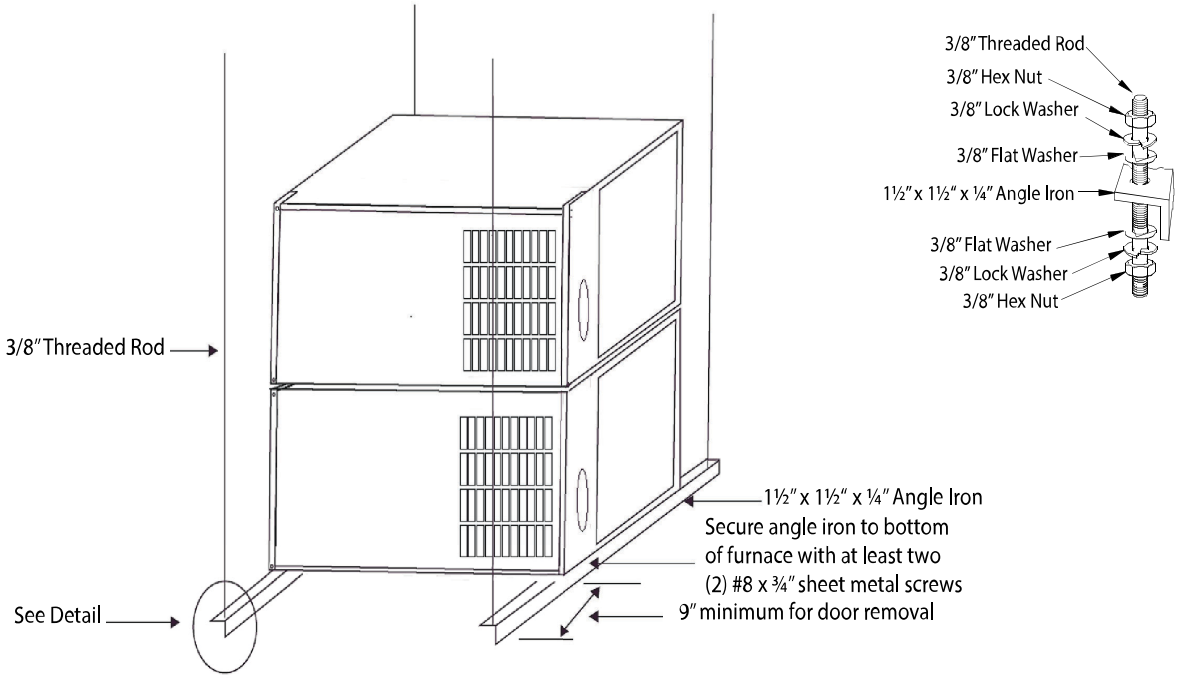

Representative drawing only, some models may vary.

A10278

Fig. 14 – Suspended Installation for Horizontal Furnaces Stacked Together — for Non-Condensing Furnaces ONLY.

Horizontal, Stacked Together for Non-Condensing ONLY

Do not suspend furnaces with straps or suspend from roof decking.

For attic installations on a platform, see Fig. 11:

1. Construct a platform from 3/4-in. (nominal plywood), extending out 30 inches (762 mm) from the front of each furnace.
2. Maintain all clearances to combustibles per the furnace Installation, Start-up and Operating Instructions.
3. Follow all additional building codes.
4. Long truss spans may require additional support along the bottom chord of the truss. Consult the truss manufacturer's guidelines for engineering assistance.
5. Long rafter or attic joist spans may require additional support along the bottom of the rafter or joist. Consult local or regional building codes for design and loading requirements.

For suspended installations, see Fig. 14.

(Not recommended for wood trusses unless approved by the truss manufacturer or other approved engineering methods):

1. Furnaces may be suspended using two (2) pieces of 1-1/2-in. x 1-1/2-in. x 1/4-in. thick cold rolled angle iron underneath the furnaces and four (4) 3/8-in. diameter threaded rods.
2. Allow for at least 9 inches (229 mm) in front of each door for door removal.
3. Each piece of angle iron must be secured to the bottom of each furnace with at least two (2) #8 x 3/4-in. sheet metal screws.
4. Maintain all clearances to combustibles per the furnace Installation, Start-up and Operating Instructions.
5. Unistrut or similar material may be used, provided that the furnaces do not sag in the middle or bend or twist at the support ends. The support material must be secured to the bottom of each furnace in a manner similar to securing angle iron to the furnace.
6. For all horizontal applications: Return air can only be connected to bottom opening of furnace.
7. Apply 2 factory-supplied foam strips to mating side of each furnace. Locate strips equal distance from top and bottom (Fig. 6).
8. Remove 7/8-in. diameter accessory hole knockouts in blower compartment from mating sides of furnaces.
9. Insert a plastic snap bushing through the 7/8-in. K.O. from the outside of the casing.
10. Position furnaces on top of each other on platform or suspended supports. Adjust and shim each furnace to align 7/8-in. diameter holes in both furnaces.
11. Drill two 1/8-in. holes, approximately 1 in. (25 mm) below discharge flange, from inside top of discharge opening and through both furnaces (Fig. 7). Drill two 1/8-in. holes, approximately 1 in. (25 mm) above return air opening flange, from inside blower compartment and through both furnaces (Fig. 8).
12. Drive 1 factory-supplied screw through each hole and tighten until furnaces are secure and foam strips have sealed gap between furnaces.
13. Connect return- and supply-air ducts to furnaces. Seal duct connections to prevent air leakage.
14. Move 115V junction box JB in RH furnace (as viewed from the upflow position) from left-hand side to right-hand side. Refer to furnace installation instructions for complete details.
15. Go to CONNECT ELECTRICAL COMPONENTS on p13.

SECTION 3

CONNECT ELECTRICAL COMPONENTS

WARNING

UNIT DAMAGE AND FIRE HAZARD

Failure to follow this warning could result in fire, personal injury or death.

Make no connections between the R 24 VAC connection in one furnace and the R 24 VAC connection in other furnace.

TWINNING KIT HARNESS CONNECTIONS

NOTE: There are four harnesses included in this kit. If the furnaces are side-by-side, only the Main and Secondary harnesses are required. If the furnaces are installed back-to-back, the extension harness included in the kit must be used. If the unit(s) use A2L (R-454B) refrigerant, a separate Power Wire Harness (Table 1) must be used. See Connect the Leak Dissipation Control Board on p17 for instructions.

WARNING

Failure to follow this warning could result in personal injury or equipment damage.

When using A2L (R-454B) refrigerant, the Power Wire Harness **must** be used for the agency required leak detection and dissipation system to function properly.

Install Extension Harness

Extension harness is shown in Fig. 16.

To install the Extension harness on back-to-back furnace, follow the steps in Fig. 16. For other orientations, omit this step.

The Main furnace end of the harness is identified by a white label marked "MAIN" on the label near the end of the extension harness. The Secondary furnace end of the harness is identified by a white label marked "Secondary" on the label near the end of the extension harness.

1. Verify the knockouts are removed from the same side of each furnace blower compartment.
2. Remove the locknut from each end of the 1/2-in. BX connector
3. Route the 4-pin plug and the 2-pin plug of the Main furnace end of the Extension harness one at a time through the knockout into the Main furnace blower compartment.
4. Insert the plugs through the locknut of the 1/2-in. BX connector and tighten the locknut on the BX connector.
5. Route the 4-pin plug and the 2-pin plug of the Secondary furnace end of the Extension harness one at a time through the knockout into the Secondary furnace blower compartment.
6. Insert the plugs through the locknut of the 1/2-in. BX connector and tighten the locknut on the BX connector.

Install Main Twinning Kit Harness

NOTE: If the furnaces are installed back-to-back, verify which furnace is the Main furnace before installing Twinning Kit Harnesses. Refer to the tag on the ends of the Extension harness used for back-to-back installations.

The Main Twinning Kit harness is identified by a white label marked "MAIN" on the label near the two pin receptacle of the Main Auxiliary Limit Switch (ALS-M) leads. The Twinning Kit Relay (TKR) and Main Auxiliary Limit Switch (ALS-M) mount to the blower housing as shown in Fig. 15. The individual leads are labeled on the harness (Fig. 17). Refer to Fig. 19 for location of control board components. Connect the Main Twinning Kit harness to furnace control board as follows:

7. Connect the Yellow wire labeled “TEST” to the “TEST/TWIN” terminal on the Main furnace control board.
8. Remove the Red transformer lead from the “SEC-1/24 VAC” terminal on the Main furnace control board.
9. Connect the Red transformer lead removed from the Main furnace control board to the Red wire labeled “TRANS” on the Main Twinning Kit harness.
10. Connect the Orange wire labeled “SEC-1/24 VAC” to the “SEC-1/24 VAC” terminal on the Main furnace control board.
11. Connect the Black wire with the fork terminal labeled “C” on the TKR to the “COM/24V” terminal on the thermostat strip of the Main furnace control board.
12. Install the Twinning Kit Relay, (TKR)
    a. For single-stage operation of single-stage furnaces connect the White wire with the fork terminal labeled “W” on the TKR to the “W” terminal on the thermostat strip of the Main furnace control board (Fig. 24).
    b. For staged operation of single-stage furnaces with a two-stage thermostat, remove the fork terminal from the terminal on the TKR and discard. The thermostat W2 lead is spliced into this wire. Refer to Fig. 25 and THERMOSTAT CONNECTIONS on p19 for details.
    c. For operation of two-stage furnaces with a single-stage or two-stage thermostat, connect the White wire with the fork terminal on the TKR to the “W/W1” terminal on the thermostat strip of the Main furnace control board. Refer to Fig. 19 and THERMOSTAT CONNECTIONS on p19 for details.
13. If extension harness is installed, plug 2-pin and 4-pin connectors of the Main Twinning Kit harness into the 2-pin and 4-pin connectors of the Extension Harness. If not using the extension harness, proceed to next step.

Install Secondary Twinning Kit Harness

The Secondary Twinning Kit harness is identified by a white label marked “SECONDARY” on the label near the two pin plug of the Auxiliary Limit Switch (ALS-S) leads. The Door Interlock Relay (ILR) and Secondary Auxiliary Limit Switch (ALS-M) mount to the blower housing as shown in Fig. 15. The individual leads are labeled on the harness (Fig. 18). Connect the Secondary Twinning Kit harness to furnace control board as follows:

1. Connect the Yellow wire labeled “TEST SECONDARY” to the “TEST/TWIN” terminal on the Secondary furnace control board.
2. Connect the Black wire with the fork terminal labeled “C SECONDARY” to the “COM/24V” terminal on the thermostat strip of the Secondary furnace control board.
3. Connect the White wire with the fork terminal labeled “W SECONDARY” to the “W” or “W/W1” terminal on the thermostat strip of the Secondary furnace control board.
4. Connect the Red wire with the fork terminal labeled “R SECONDARY” to the “R” terminal on the thermostat strip of the Secondary furnace control board.
5. Remove the Red transformer lead from the “SEC-1/24 VAC” terminal on the Secondary furnace control board.
6. Connect the Red wire with the piggy-back terminal labeled “SEC-1/24 VAC” on the ILR to the “SEC-1/24 VAC” terminal on the Secondary furnace control board.
7. Connect the Red transformer lead to the piggy back terminal of the Red wire connected to the “SEC-1/24 VAC” terminal on the Secondary furnace control board.
8. Remove the Blue transformer lead from the “SEC-2/COM” terminal on the Secondary furnace control board.
9. Connect the Black wire with the piggy-back terminal labeled “C” on the ILR to the “SEC-2/COM” terminal on the Secondary furnace control board.
10. Connect the Blue transformer lead to the piggy back terminal of the Black wire connected to the “SEC-2/COM” terminal on the Secondary furnace control board.
11. Connect 2-pin and 4-pin connector from Secondary Twinning Kit harness to Extension harness (if used) or route 2-pin and 4-pin connector through knockout and snap bushing previously installed, and plug into 2-pin and 4-pin connector of Main Twinning Kit harness.

NOTE: Representative drawing only, some models may vary. Applies to both Non-Condensing & Condensing Furnaces.

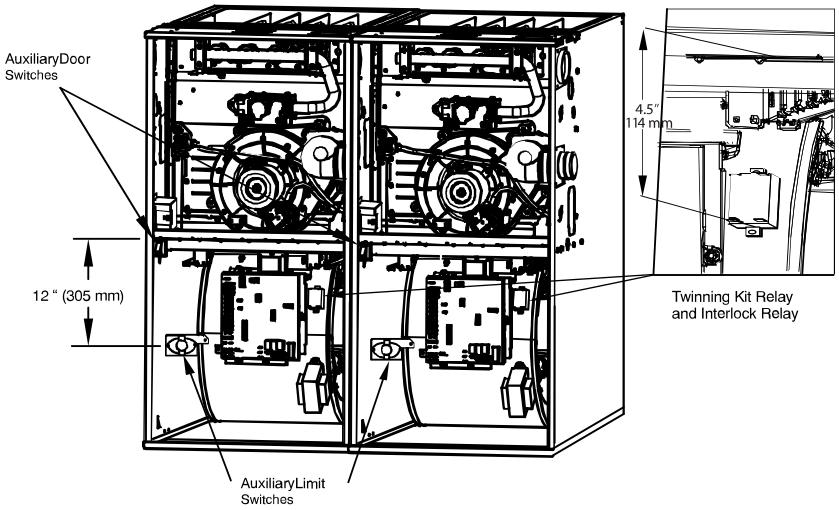

Representative drawing only, some models may vary.

NOTE:

a.Mount Twinning Kit Relay and Interlock Relay on furnace blower housing as shown.

b.Twining Kit Relay (TKR) mounts on LH Furnace blower housing

c.Interlock Relay (ILR) mounts on RH furnace blower housing.

Fig. 15 – Mounting Twinning Kit Relay

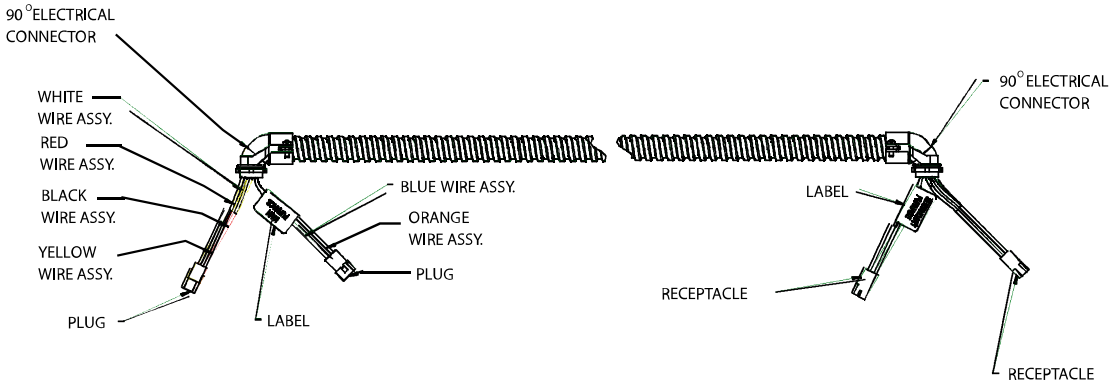

Fig. 16 – Extension Harness

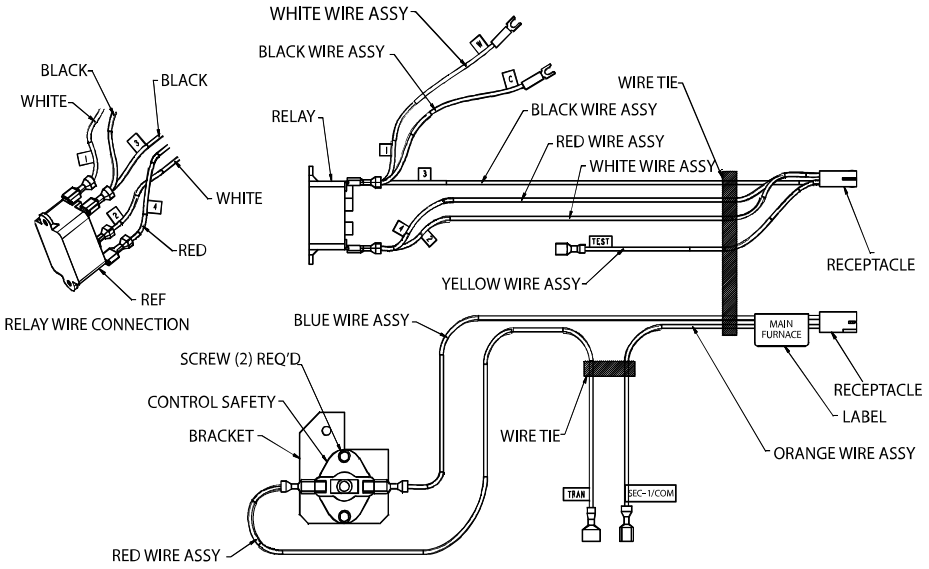

Fig. 17 – Main Harness

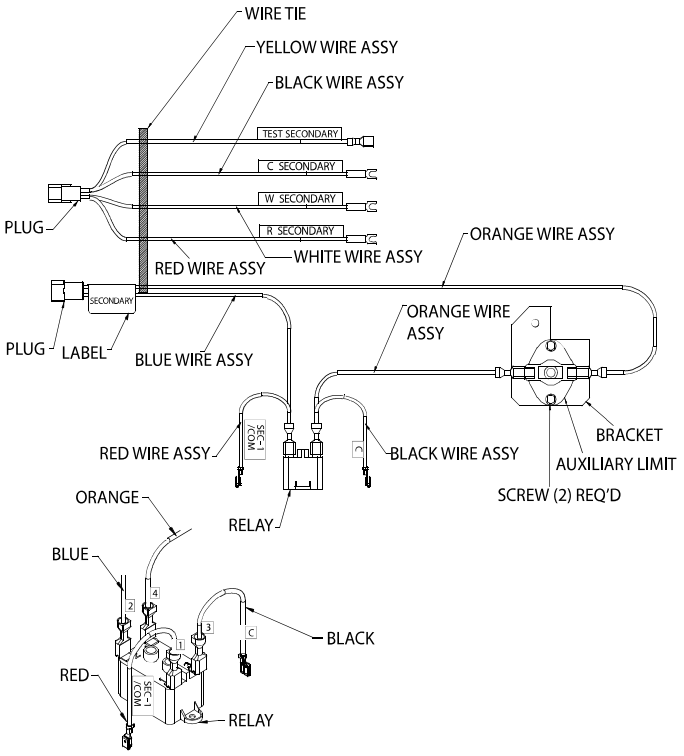

Fig. 18 – Secondary Harness

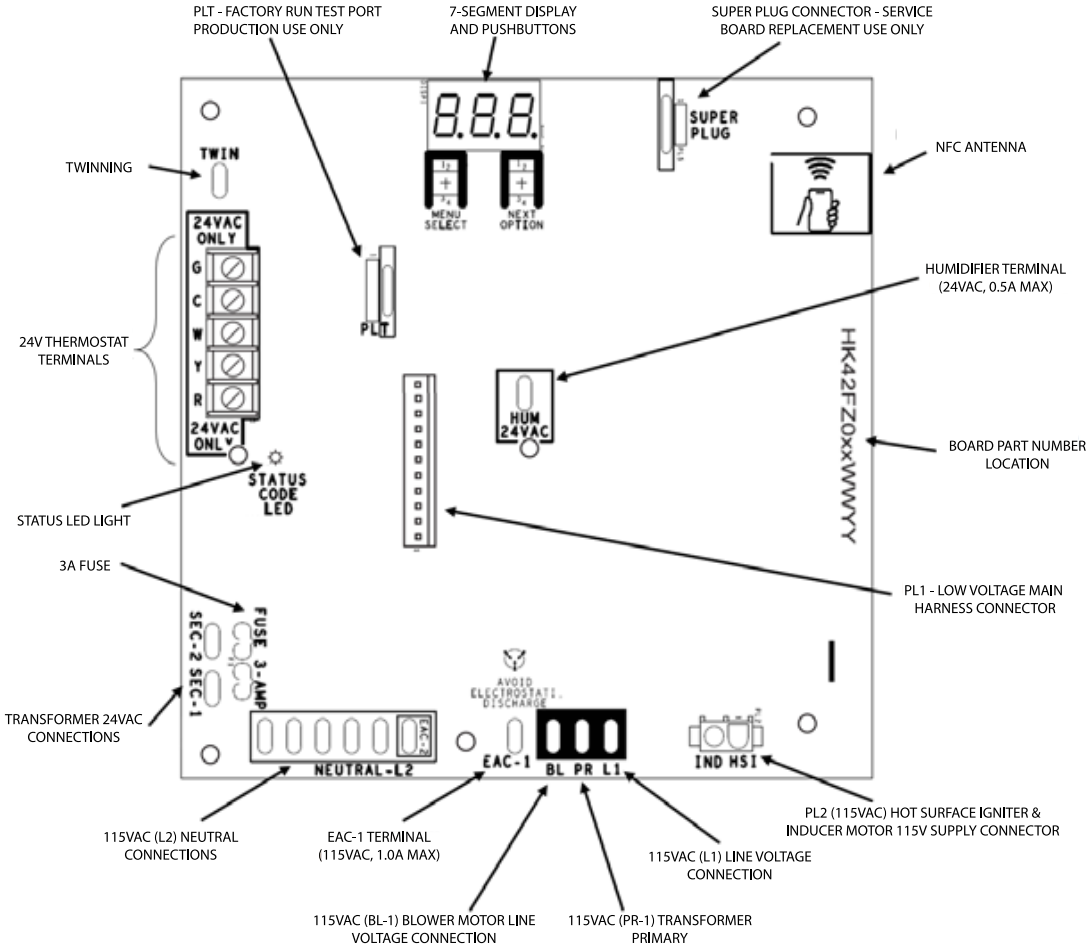

Fig. 19 – Example of Furnace Control

115 VAC Connections to Furnace

⚠ WARNING

ELECTRICAL SHOCK, FIRE OR EXPLOSION HAZARD

Failure to follow this warning could result in personal injury or death, or property damage.

Before installing, modifying, or servicing system, main electrical disconnect switch must be in the OFF position and install a lockout tag. There may be more than one disconnect switch. Check accessories and cooling unit for additional electrical supplies that must be shut off during furnace servicing. Lock out and tag switch with a suitable warning label. Verify proper operation after servicing.

Each furnace shall be connected to its own 115 VAC power supply. The twinning kit installation interconnects the furnaces, allowing them to operate as a single furnace. The L1 (black) connection to each furnace must be connected to circuit breakers connected to the same service panel 115 VAC phase leg.

NOTE: If the furnaces are not connected to the same phase leg of the electrical power supply, the furnaces will not operate properly.

- On single-phase (residential) systems, each furnace circuit breaker should be located directly across from each other in service panel, or each furnace circuit breaker should be located on the same side of service panel, but must skip one space to be connected to the same leg of the single-phase power supply.
- On 3-phase (commercial) systems, each furnace circuit breaker should be located directly across from each other in service panel, or each furnace circuit breaker should be located on the same side of service panel, but must skip two spaces to be connected to the same leg of the 3-phase power supply.

The proper 115 VAC phasing of furnace connections permits 24 VAC transformer phasing as described below.

Phasing of the connected 24 VAC transformer secondary circuits can be determined with the LED status of both furnaces.

See furnace Installation, Start-Up, and Operating Instructions and status code labels on blower doors. The furnaces' transformers' black leads should be connected to PR1 connectors and white leads to L2 connectors on controls. If one or both LEDs are rapidly flashing, disconnect lead at TWIN/TEST terminal of LH furnace and observe LED at each furnace.

To verify that the furnaces are in phase, check from Main furnace L1 to Secondary furnace L1 with a voltmeter. If the furnaces are in phase, the voltage between both furnaces will be ZERO.

IF:

- Both LEDs are on continuously: System phasing is okay.
- One or both LEDs are rapidly flashing:
  - Line voltage polarity is reversed.
  - Furnace(s) are not grounded
  - Transformer polarity is reversed.
- One LED is off, one LED is on continuously:
  - The 24 VAC circuit is inoperative on furnace with LED light off.
  - Check transformers, auxiliary limits, and door switches in both furnaces and correct problem.
  - Reconnect lead at TWIN/TEST terminal of LH furnace and observe LED at each furnace. The LEDs will glow steady for proper phasing.

See Electrostatic Discharge Precaution Section.

NOTE: All electrical power connections must be made through exposed outer side of each furnace. Do not common connect any connection other than supply- and return-air ducts.

- Side-by-side furnaces in the upflow and downflow position, the LH furnace line voltage connections must be made on the left side of the furnace. The RH furnace line voltage connections must be made on the right hand side of the casing.
- Horizontal back-to-back installations, electrical connections should be made on the sides of the furnace facing up.
- Upflow and downflow back-to-back installations can use either side of the furnace for line voltage electrical connections.

CONNECT ELECTRICAL COMPONENTS - COOLING

⚠ WARNING

ELECTRICAL SHOCK, FIRE OR EXPLOSION HAZARD

Failure to follow this warning could result in personal injury or death, or property damage.

Before installing, modifying, or servicing system, main electrical disconnect switch must be in the OFF position and install a lockout tag. There may be more than one disconnect switch. Check accessories and cooling unit for additional electrical supplies that must be shut off during furnace servicing. Lock out and tag switch with a suitable warning label. Verify proper operation after servicing.

NOTE: Cooling units used with twinned furnaces MUST be single-stage A/C units. HEAT PUMPS CANNOT BE TWINNED with gas furnaces.

When installing twinned outdoor units with twinned gas furnaces, it is necessary to use field-supplied 24 VAC pilot-duty relay(s) and a field-supplied 24 VAC/115 VAC transformer as shown in the individual wiring diagrams to prevent overloading furnace 24 VAC/115 VAC transformer. Transformer VA rating must be able to handle the load imposed on it by the outdoor unit contactor(s).

1. Connect the L1 lead of the field-supplied transformer line voltage lead to L1 on Main furnace control board.
2. Connect the Neutral lead of the field-supplied transformer to an open Neutral terminal on the Main furnace control board.

NOTE: If sufficient room is available in the control box of the outdoor unit, a 24 VAC/240-VAC transformer may be used. Connect line voltage leads of the transformer to the appropriate connection locations on the outdoor unit, Refer to the outdoor unit wiring diagram for specific details.

For Single-Stage A/C Operation with Single-Stage Thermostat

See Fig. 22, Fig. 23, or Fig. 24.

In the configuration both A/C units come on together as a single unit. It will be necessary to supply one pilot duty relay for A/C operation.

1. Connect one coil terminal of the field-supplied pilot duty relay to the “COM/24V” terminal of the furnace control board.
2. Connect the other coil terminal of the field-supplied pilot duty relay to the “Y or Y/Y2” terminal of the furnace control board.
3. Connect the R terminal of the field-supplied transformer to the open contract of the pilot duty relay.
4. Connect the other open contact to the wire for Y terminal of the contactor(s).
5. Connect the Common terminal of the contactor(s) to the C terminal of the field supplied transformer.

For Two-Stage A/C Operation with a Two-Stage thermostat (not allowed with A2L systems)

See Fig. 25 or Fig. 26.

In this configuration, the individual A/C unit(s) are staged on and run as controlled by the two-stage thermostat. It will be necessary to supply two pilot duty relays for staged A/C operation. Once A/C unit will be the first stage unit, the other A/C unit will be the second stage unit. Single-stage furnaces are staged individually by the thermostat.

1. Connect one coil terminal of each of the pilot duty relay together.
2. Connect these two terminals to the “COM/24V” terminal of the furnace control board.
3. Select one of the relays to be the relay for first stage cooling. Connect the coil terminal of this relay to the “Y or Y/Y2” terminal of the furnace control board.
4. The other relay is the second stage cooling relay. The coil terminal of this relay will connect to the “Y/Y2” terminal of the thermostat. Do not connect the terminal to the Y1 terminal on the furnace control board.
5. Connect the R terminal of the field-supplied transformer to the open contract of each pilot duty relay.
6. Connect the other open contact of the first stage cooling relay to the wire for Y terminal of the first stage contactor.
7. Connect the other open contact of the first stage cooling relay to the wire for Y terminal of the second stage contactor.
8. Connect the Common terminal of the contactor(s) to the C terminal of the field supplied transformer.

LEAK DISSIPATION SYSTEM

IMPORTANT:

1. **For R-410A (non-A2L) systems:** Skip this section and go to THERMOSTAT CONNECTIONS on p19.
2. **For R-454B (A2L) systems**: This section is **only** for newer units (2023+) shipped with an A2L refrigerant coil and a dissipation control. This system includes an internal sensor to detect refrigerant leaks with an external control board that must be connected to a furnace. This is only compatible with A2L dissipation equipment from the same manufacturer of this twinning kit.

Introduction

The purpose of the dissipation control is to provide specific operation when a leak has been detected and to provide dissipation airflow while the condition remains. If a leak is detected, the dissipation control will lock out cooling (Y-ODU) to the outdoor unit as well as hold off heating for 15 minutes from original leak detection. Cooling is not allowed until leak condition has met minimum level. This operation applies to both units regardless of which dissipation control has sensed a leak.

Connect the Leak Dissipation Control Board

Follow the instructions included with the evaporator (furnace) coil for basic setup and troubleshooting of the dissipation control. A separate wiring label for the Twinning application is provided in the Twinning Kit for this use. See Fig. 22 and Fig. 23.

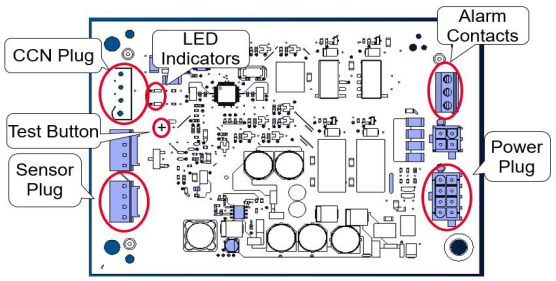

A230455

Fig. 20 – Leak Dissipation Control Board

Install Power Wire Harness (A2L Leak Dissipation) (from Twinning Kit)

WARNING

Failure to follow this warning could result in personal injury or equipment damage.

When using A2L (R-454B) refrigerant, the Power Wire Harness **must** be used for the agency required leak detection and dissipation system to function properly.

CAUTION

UNIT DAMAGE HAZARD

Failure to follow this Caution could cause damage to the equipment.

Do NOT use the POWER WIRE HARNESS that comes with the coil for this installation. Use the Power Wire Harness supplied in the Twinning Kit.

NOTE: Dissipation controls MUST be within 2 feet or less of each other to meet wire harness length available. The A2L Dissipation Power Harness is not used for non-A2L cooling applications.

Table 5 – Wiring Harness Details

Pin #	8-Pin (Main)	Color	8-Pin (Secondary)	Color
1	SEC-1 MAIN	RED	SEC-1 SECONDARY	RED
2	PIN-6 SECONDARY	GREEN/VIOLET	G-MAIN	GREEN/VIOLET
3	W/W1-STAT	WHITE	PIN-7 MAIN	WHITE/VIOLET
4	PIN-5 SECONDARY	YELLOW/VIOLET	Y-ODU	YELLOW/VIOLET
5	Y-MAIN	YELLOW	PIN-4 MAIN	YELLOW/VIOLET
6	G-STAT	GREEN	PIN-2 MAIN	GREEN/VIOLET
7	PIN-3 SECONDARY	WHITE/VIOLET	W/W1 MAIN	WHITE/VIOLET
8	C-MAIN	BLACK	C-SECONDARY	BLACK

The Power Wire Harness (A2L Leak Dissipation) (Fig. 21) has two 8-pin connectors with one labeled as MAIN (for MAIN unit) and the other as SECONDARY (for SECONDARY unit). This is key to wiring correctly so ensure which unit has been set as MAIN and SECONDARY and wire accordingly.

1. Connect 8-pin MAIN connector to MAIN dissipation control.
2. Connect 8-pin SECONDARY connector to SECONDARY dissipation control.

MAIN section of the harness will have the following connections:

- Route wires through the 7/8" hole and plastic bushing (supplied in the kit).
- W/W1 STAT — Using a field-supplied wire nut, connect the A2L Power Harness wire labeled W/W1 STAT to the W/W1 directly from the thermostat.
  - The W/W1 wire from the thermostat does NOT go to the furnace control for this application
- G STAT — Using a field-supplied wire nut, connect the A2L Power Harness wire labeled "G STAT" to the G wire from the thermostat.
  - The G wire from the thermostat does NOT go to the furnace control for this application.
- W/W1 MAIN — Connect the A2L Power Harness wire with fork terminal labeled "W/W1 MAIN" to the W/W1 terminal on the thermostat strip of the main furnace control board.
- G MAIN — Connect the A2L Power Harness wire with fork terminal labeled "G MAIN" to the G terminal on the thermostat strip of the main furnace control board.
- Y MAIN — Connect the A2L Power Harness wire with fork terminal labeled "Y MAIN" to the Y/Y2 terminal on the thermostat strip of the main furnace control board.
- C MAIN — Connect the A2L Power Harness wire with fork terminal labeled "C MAIN" to the C terminal on the thermostat strip of the main furnace control board.
- SEC-1 MAIN — Remove the orange wire from the SEC-1/24VAC terminal on the main furnace control board.
  - Connect the A2L Power Harness wire with the piggy-back terminal labeled "SEC-1 MAIN" to the "SEC-1/24VAC" terminal on the main furnace control board.
  - Connect the orange wire to the piggy-back terminal of the SEC-1 MAIN wire connected to the SEC-1/24VAC terminal on the main furnace control board.
- Y-ODU is to be wired to 24V wire going to the outdoor unit relay.
  - This output is what turns ON the outdoor units for a cooling request.

SECONDARY section of the harness will have the following connections:

- Route wires through the 7/8" hole and plastic bushing (supplied in the kit).
- SEC-1 SECONDARY — Remove the 2 red wires from the SEC-1/24VAC terminal on the secondary furnace control board.
  - Connect the A2L Power Harness wire with the piggy-back terminal labeled "SEC-1 SECONDARY" to the "SEC-1/24VAC" terminal on the secondary furnace control board.
  - Connect the 2 red wires to the piggy-back terminal of the SEC-1 SECONDARY wire connected to the SEC-1/24VAC terminal on the secondary furnace control board.
- C SECONDARY — Connect the A2L Power Harness wire with fork terminal labeled "C SECONDARY" to the C terminal on the thermostat strip of the secondary furnace control board.

After connecting thermostat and proceeding through startup and adjustments, complete the dissipation system operational tests defined in section 4 to ensure proper function of dissipation system.

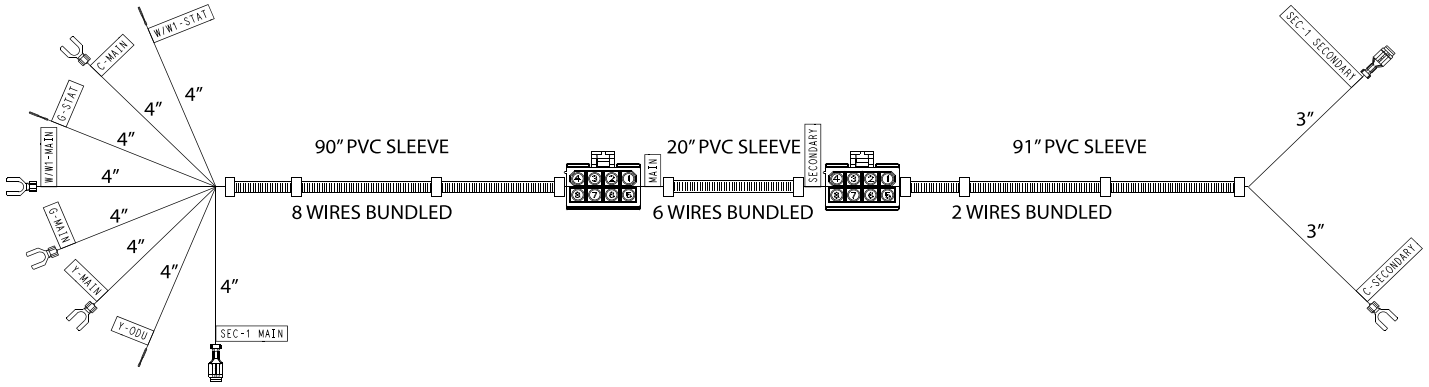

Fig. 21 – Power Wiring Harness (A2L Leak Dissipation)

THERMOSTAT CONNECTIONS

⚠ WARNING

UNIT DAMAGE AND FIRE HAZARD

Failure to follow this warning could result in fire, personal injury or death.

Make no connections between the R 24 VAC connector in one furnace and the R 24 VAC connector in other furnace.

NOTE: All thermostat connections MUST be made at the Main furnace control board. Do not make any thermostat connections to the Secondary furnace control board.

Single-Stage Furnaces with Single-Stage Thermostat (Field Supplied)

⚠ WARNING

Failure to follow this warning could result in personal injury or equipment damage.

When using A2L (R-454B) refrigerant, the Power Wire Harness **must** be used for the agency required leak detection and dissipation system to function properly.

See Fig. 24 and Table 6 for R-410A systems, or

See Fig. 22 and Table 6 for R-454B systems.

NOTE: This application allows both furnaces to operate together as a single unit. See furnace Installation, Start-Up, and Operating Instructions for further details on this heating mode.

1. For A2L systems, using a field-supplied wire nut, connect thermostat W lead to A2L Power Harness wire labeled “W/W1-STAT;” for non-A2L systems, connect thermostat W lead to “W” on the Main furnace control board.
2. Connect thermostat Y lead to “Y or Y/Y2” on the Main furnace control board.
3. For A2L systems, connect the G thermostat lead to the A2L Power Harness wire labeled “G-STAT;” for non-A2L systems connect thermostat lead to “G” terminal on the Main furnace control board.
4. Connect thermostat R lead to “R” terminal on Main furnace control.
5. Connect thermostat C or COM lead to the “COM/24V” terminal on the Main furnace control board.

Single-Stage Furnaces and A/C with Two-Stage thermostat (Field Supplied)

See Fig. 25 and Table 6.

NOTE: This application allows single-stage furnaces to operate with one furnace or with both furnaces as determined by a two-stage thermostat. **This setup cannot be used with A2L (R-454B) Systems.**

1. Connect thermostat W1 lead to “W” on the Main furnace control board.
2. Connect thermostat W2 lead to White wire labeled “W” on the twinning kit relay (TKR).
3. Connect first stage cooling thermostat lead Y1 to “Y or Y/Y2” on the Main furnace control board.
4. Connect the second stage cooling thermostat lead Y/Y2 to the pilot duty relay coil for the second stage contactor.
5. Connect the G thermostat lead to the “G” terminal on the Main furnace control board.
6. Connect thermostat R lead to “R” terminal on Main furnace control.
7. Connect thermostat C or COM lead to the “COM/24V” terminal on the Main furnace control board.
8. Connect the G thermostat lead to the “G” terminal on the Main furnace control board.
9. Connect thermostat R lead to “R” terminal on Main furnace control.
10. Connect thermostat C or COM lead to the “COM/24V” terminal on the Main furnace control board.

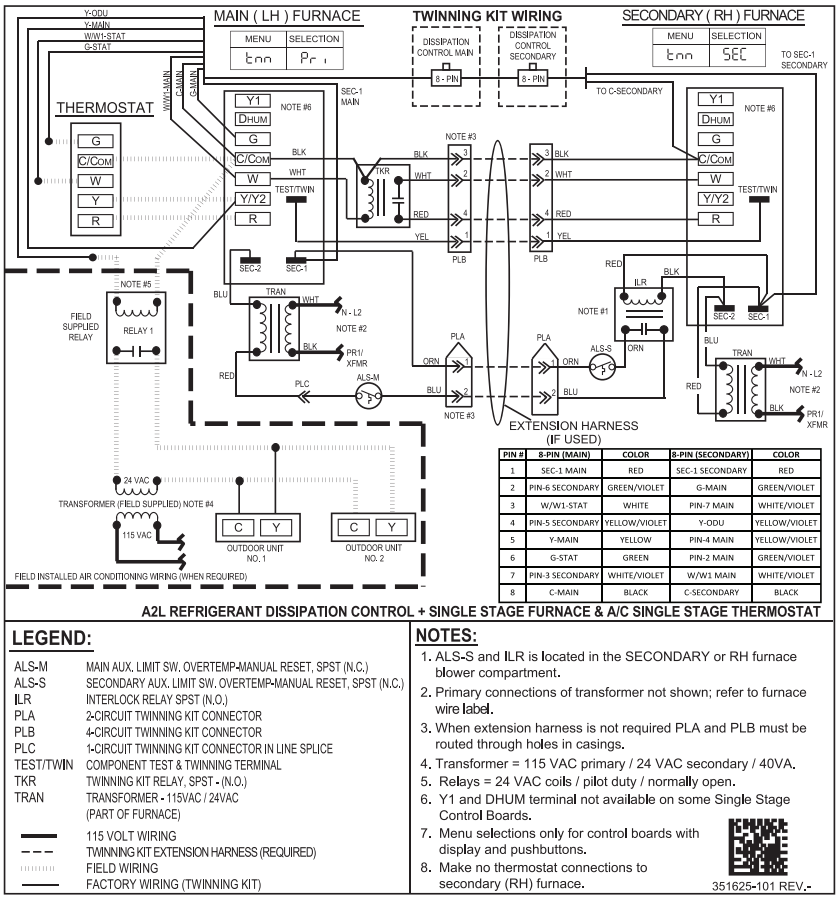

PIN #	8-PIN (MAIN)	COLOR	8-PIN (SECONDARY)	COLOR
1	SEC-1 MAIN	RED	SEC-1 SECONDARY	RED
2	PIN-6 SECONDARY	GREEN/VIOLET	G-MAIN	GREEN/VIOLET
3	W/W1-STAT	WHITE	PIN-7 MAIN	WHITE/VIOLET
4	PIN-5 SECONDARY	YELLOW/VIOLET	Y-ODU	YELLOW/VIOLET
5	Y-MAIN	YELLOW	PIN-4 MAIN	YELLOW/VIOLET
6	G-STAT	GREEN	PIN-2 MAIN	GREEN/VIOLET
7	PIN-3 SECONDARY	WHITE/VIOLET	W/W1 MAIN	WHITE/VIOLET
8	C-MAIN	BLACK	C-SECONDARY	BLACK

A2L REFRIGERANT DISSIPATION CONTROL + SINGLE STAGE FURNACE & A/C SINGLE STAGE THERMOSTAT

LEGEND:

ALS-M	MAIN AUX. LIMIT SW. OVERTEMP-MANUAL RESET, SPST (N.C.)
ALS-S	SECONDARY AUX. LIMIT SW. OVERTEMP-MANUAL RESET, SPST (N.C.)
ILR	INTERLOCK RELAY SPST (N.O.)
PLA	2-CIRCUIT TWINNING KIT CONNECTOR
PLB	4-CIRCUIT TWINNING KIT CONNECTOR
PLC	1-CIRCUIT TWINNING KIT CONNECTOR IN LINE SPLICE
TEST/TWIN	COMPONENT TEST & TWINNING TERMINAL
TKR	TWINNING KIT RELAY, SPST - (N.O.)
TRAN	TRANSFORMER - 115VAC / 24VAC (PART OF FURNACE)
▬▬	115 VOLT WIRING
- - -	TWINNING KIT EXTENSION HARNESS (REQUIRED)
⋮⋮⋮	FIELD WIRING
——	FACTORY WIRING (TWINNING KIT)

NOTES:

1. ALS-S and ILR is located in the SECONDARY or RH furnace blower compartment.
2. Primary connections of transformer not shown; refer to furnace wire label.
3. When extension harness is not required PLA and PLB must be routed through holes in casings.
4. Transformer = 115 VAC primary / 24 VAC secondary / 40VA.
5. Relays = 24 VAC coils / pilot duty / normally open.
6. Y1 and DHUM terminal not available on some Single Stage Control Boards.
7. Menu selections only for control boards with display and pushbuttons.
8. Make no thermostat connections to secondary (RH) furnace.

351625-101 REV.-

Fig. 22 – A2L Single Stage Wiring Diagram

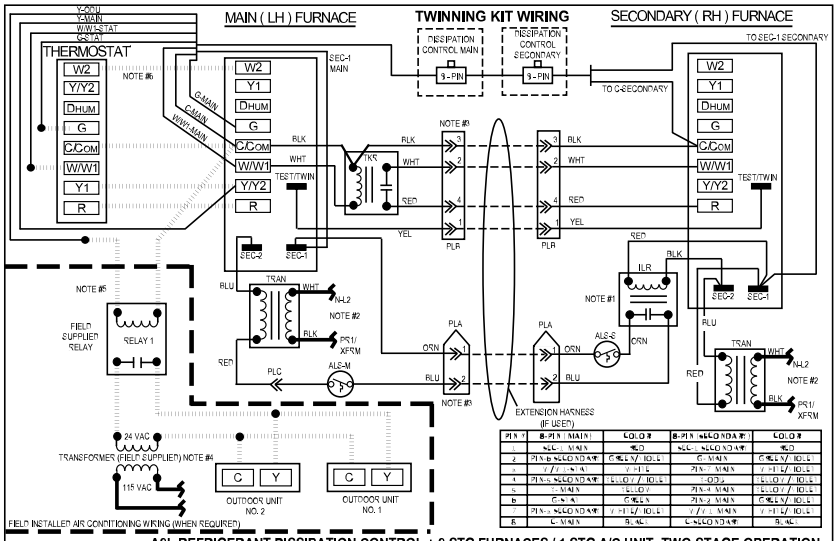

PIN #	8-PIN (MAIN)	COLOR	8-PIN (SECONDARY)	COLOR
1	SEC-1 MAIN	RED	SEC-1 SECONDARY	RED
2	PIN-6 SECONDARY	GREEN/VIOLET	G-MAIN	GREEN/VIOLET
3	W/W1-STAT	WHITE	PIN-7 MAIN	WHITE/VIOLET
4	PIN-5 SECONDARY	YELLOW/VIOLET	Y-ODU	YELLOW/VIOLET
5	Y-MAIN	YELLOW	PIN-4 MAIN	YELLOW/VIOLET
6	G-STAT	GREEN	PIN-2 MAIN	GREEN/VIOLET
7	PIN-3 SECONDARY	WHITE/VIOLET	W/W1 MAIN	WHITE/VIOLET
8	C-MAIN	BLACK	C-SECONDARY	BLACK

A2L REFRIGERANT DISSIPATION CONTROL + 2 STG FURNACES / 1 STG A/C UNIT -TWO STAGE OPERATION

LEGEND:

ALS-M	MAIN AUX. LIMIT SW. OVERTEMP-MANUAL RESET, SPST (N.C.)
ALS-S	SECONDARY AUX. LIMIT SW. OVERTEMP-MANUAL RESET, SPST (N.C.)
ILR	INTERLOCK RELAY (N.O.)
PLA	2-CIRCUIT TWINNING KIT CONNECTOR
PLB	4-CIRCUIT TWINNING KIT CONNECTOR
PLC	1-CIRCUIT TWINNING KIT CONNECTOR IN LINE SPLICE
TEST/TWIN	COMPONENT TEST & TWINNING TERMINAL
TKR	TWINNING KIT RELAY, SPST - (N.O.)
TRAN	TRANSFORMER - 115VAC / 24VAC (PART OF FURNACE)
▬▬	115 VOLT WIRING
- - -	TWINNING KIT EXTENSION HARNESS (REQUIRED)
⋮⋮⋮	FIELD WIRING
——	FACTORY WIRING (TWINNING KIT)

NOTES:

1. ALS-S and ILR is located in the SECONDARY or (RH) furnace blower compartment.
2. Primary connections of transformer not shown; refer to furnace wire label.
3. When extension harness is not required PLA and PLB must be routed through holes in casings.
4. Transformer = 115 VAC primary / 24 VAC secondary / 40VA.
5. Relays = 24 VAC coils / pilot duty / normally open.
6. Two-stage heating can be accomplished by one of the two methods:
   a. Using one stage thermostat and letting the Main Furnace's (LH) algorithm control low and high-heat operation.
   b. Using a two-stage thermostat to control low and high-heat operation. (Apply "W2" Wire)
7. Make no thermostat connections to secondary or RH furnace.

FOR CONTROLS WITH DIP SWITCHES (NO DISPLAY)

	OFF	ON
LHT/ TT		1
OFF		2
DLY		3

THERMOSTAT TYPE	MAIN (LH) LHT/ TT SWITCH 1	SECONDARY (RH) LHT/ TT SWITCH 1
ONE STAGE	OFF	ON
TWO STAGE	ON	ON

FOR CONTROLS WITH DISPLAY AND PUSHBUTTONS

THERMOSTAT TYPE	Menu	Selection Main (LH)	Selection Secondary (RH)
BOTH	tnn	Pr 1	SEC
ONE STAGE	Htt	1St	2St
TWO STAGE	Htt	2St	2St

351634-101 REV.-

Fig. 23 – A2L Two Stage Wiring Diagram

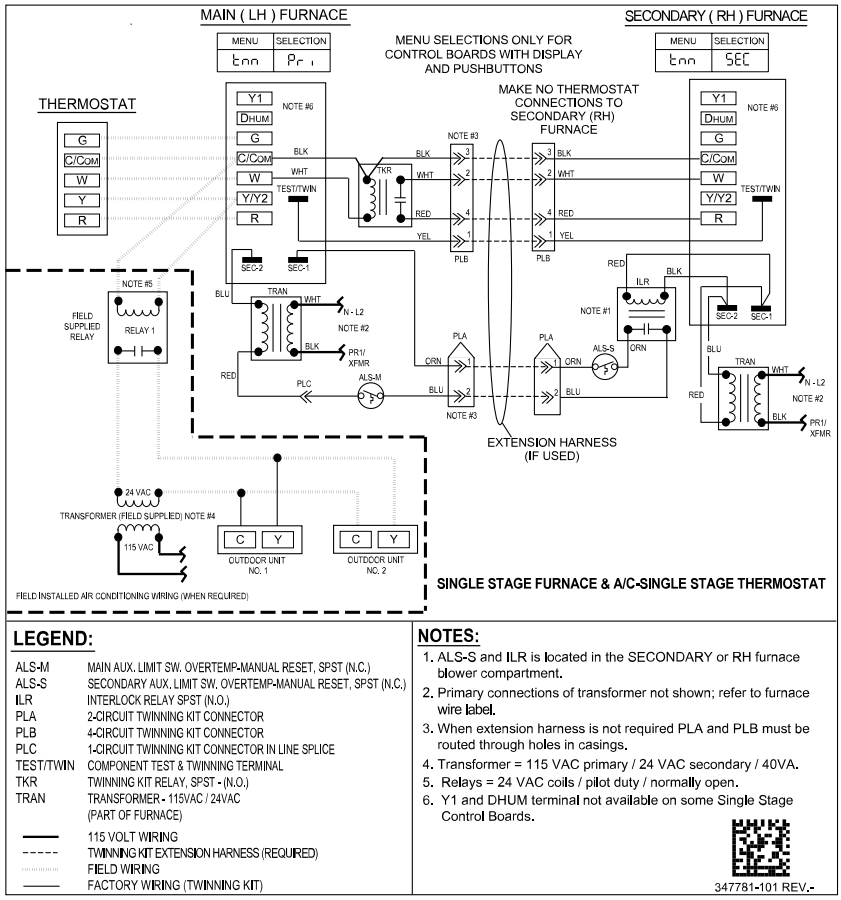

LEGEND:

ALS-M	MAIN AUX. LIMIT SW. OVERTEMP-MANUAL RESET, SPST (N.C.)
ALS-S	SECONDARY AUX. LIMIT SW. OVERTEMP-MANUAL RESET, SPST (N.C.)
ILR	INTERLOCK RELAY SPST (N.O.)
PLA	2-CIRCUIT TWINNING KIT CONNECTOR
PLB	4-CIRCUIT TWINNING KIT CONNECTOR
PLC	1-CIRCUIT TWINNING KIT CONNECTOR IN LINE SPLICE
TEST/TWIN	COMPONENT TEST & TWINNING TERMINAL
TKR	TWINNING KIT RELAY, SPST - (N.O.)
TRAN	TRANSFORMER - 115VAC / 24VAC (PART OF FURNACE)
——	115 VOLT WIRING
- - - - -	TWINNING KIT EXTENSION HARNESS (REQUIRED)
.....	FIELD WIRING
——	FACTORY WIRING (TWINNING KIT)

NOTES:

1. ALS-S and ILR is located in the SECONDARY or RH furnace blower compartment.
2. Primary connections of transformer not shown; refer to furnace wire label.
3. When extension harness is not required PLA and PLB must be routed through holes in casings.
4. Transformer = 115 VAC primary / 24 VAC secondary / 40VA.
5. Relays = 24 VAC coils / pilot duty / normally open.
6. Y1 and DHUM terminal not available on some Single Stage Control Boards.

347781-101 REV.-

Fig. 24 – Single-Stage Furnace with Single-Stage Thermostat

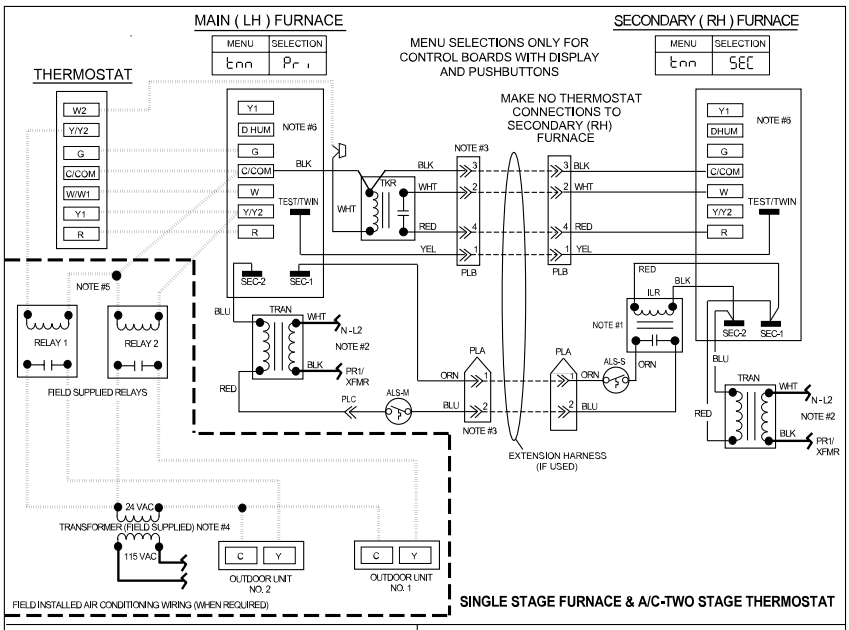

LEGEND:

ALS-M	MAIN AUX. LIMIT SW. OVERTEMP-MANUAL RESET, SPST (N.C.)
ALS-S	SECONDARY AUX. LIMIT SW. OVERTEMP-MANUAL RESET, SPST (N.C.)
ILR	INTERLOCK RELAY SPST (N.O.)
PLA	2-CIRCUIT TWINNING KIT CONNECTOR
PLB	4-CIRCUIT TWINNING KIT CONNECTOR
PLC	1-CIRCUIT TWINNING KIT CONNECTOR IN LINE SPLICE
TEST/TWIN	COMPONENT TEST & TWINNING TERMINAL
TKR	TWINNING KIT RELAY, SPST - (N.O.)
TRAN	TRANSFORMER - 115VAC / 24VAC (PART OF FURNACE)
——	115 VOLT WIRING
- - - - -	TWINNING KIT EXTENSION HARNESS (REQUIRED)
.....	FIELD WIRING
——	FACTORY WIRING (TWINNING KIT)

NOTES:

1. ALS-S and ILR is located in the SECONDARY or RH furnace blower compartment.
2. Primary connections of transformer not shown; refer to furnace wire label.
3. When extension harness is not required PLA and PLB must be routed through holes in casings.
4. Transformer = 115 VAC primary / 24 VAC secondary / 40VA.
5. Relays = 24 VAC coils / pilot duty / normally open.
6. Y1 and DHUM terminal not available on some Single Stage Control Boards.

347780-101 REV.-

Fig. 25 – Single-Stage Furnaces with Two-Stage Thermostat

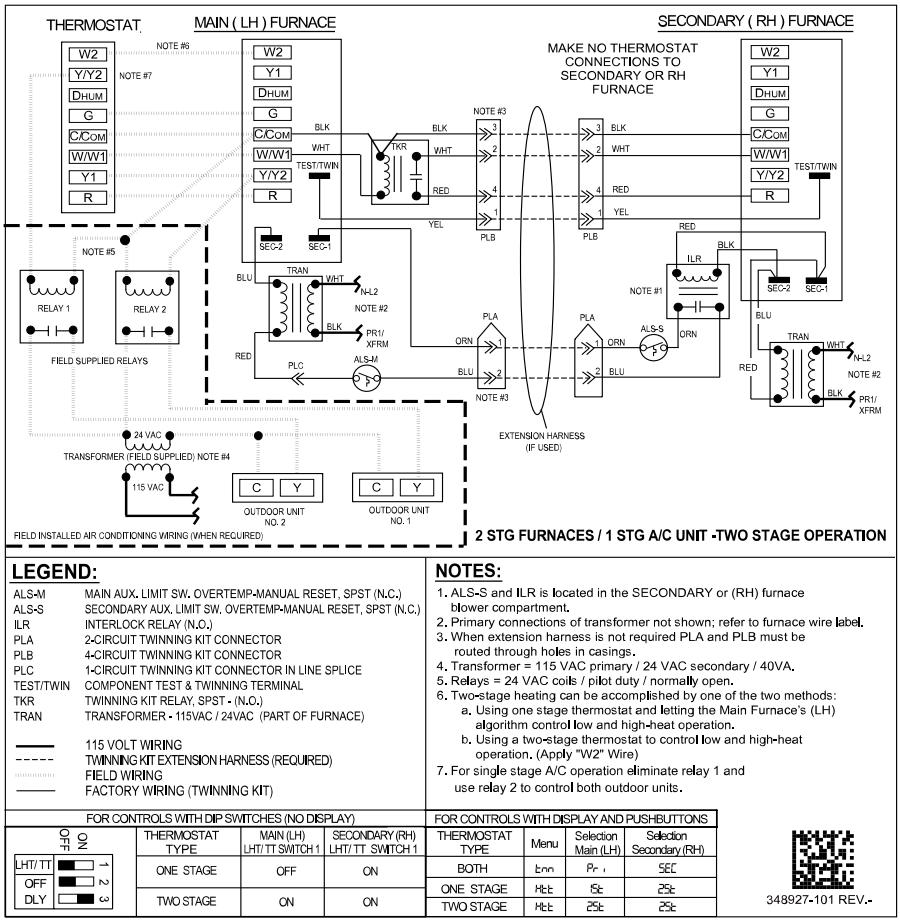

Fig. 26 – Two-Stage Furnace

Two−Stage Furnaces with Single-Stage Thermostat (Field Supplied)

⚠ WARNING

Failure to follow this warning could result in personal injury or equipment damage.

When using A2L (R-454B) refrigerant, the Power Wire Harness **must** be used for the agency required leak detection and dissipation system to function properly.

See Fig. 26 and Table 7 for R-410A systems or

See Fig. 23 and Table 7 for A2L (R-454B) systems.

NOTE: This application allows both two stage furnaces to operate in low heat for first-stage heat mode or both furnaces to operate in high heat for second-stage heat mode as determined by the staging algorithm of the Main furnace control. See furnace Installation, Start-Up, and Operating Instructions for further details on this heating mode.

To operate furnaces in two stage heating mode when a single-stage thermostat controls the staging:

1. For A2L systems, using a field-supplied wire nut, connect thermostat W lead to the A2L Power Harness wire labeled "W/W1-STAT;" for non-A2L systems connect thermostat W lead to "W/W1" on the Main furnace control board.
2. On Main/Primary Furnace Enable 1-stage heating thermostat on control board by:
   a. For boards with DIP switches, turn SW1-2 on furnace control OFF, see Fig. 26.
   b. For boards with 3 digit display, navigate to (HEt) and select (1St), see Fig. 26. See furnace installation manual for additional instructions.
3. On RH/Secondary furnace, enable 2-stage thermostat on control board by:
   a. For boards with DIP switches, turn SW1-2 on furnace control ON, see Fig. 26.
   b. For boards with 3 digit display, navigate to (HEt) and select (2St), see Fig. 26. See furnace installation manual for additional instructions.
4. Connect cooling thermostat lead Y to "Y/Y2" on the Main furnace control board.
5. For A2L systems, using a field-supplied wire nut, connect the G thermostat lead to the A2L Power Harness wire labeled "G-STAT;" for non-A2L systems connect thermostat lead to "G" terminal on the Main furnace control board.
6. Connect thermostat R lead to "R" terminal on Main furnace control.
7. Connect thermostat C or COM lead to the "COM/24V"terminal on the Main furnace control board.

Two−Stage Furnaces with Two−Stage Thermostat (Field Supplied)

⚠ WARNING

Failure to follow this warning could result in personal injury or equipment damage.

When using A2L (R-454B) refrigerant, the Power Wire Harness **must** be used for the agency required leak detection and dissipation system to function properly.

See Fig. 26 and Table 7 for R-410A systems.

See Fig. 23 and Table 7 for A2L (R-454B) systems.

To operate furnaces in two stage heating mode when a two-stage thermostat controls the staging:

1. For A2L systems, using a field-supplied wire nut, connect thermostat W to A2L Power Harness wire labeled “W/W1-STAT;” for non-A2L systems connect the thermostat W lead to “W/W1” on Main furnace control board.
2. Connect thermostat W2 to “W2” on Main furnace control board.
3. On Main/Primary Furnace Enable 2-stage heating thermostat on control board by:
   a. For boards with DIP switches, turn SW1-2 on furnace control ON, see Fig. 26.
   b. For boards with 3 digit display, navigate to (HEt) and select (2St), see Fig. 26. See furnace installation manual for additional instructions.
4. On RH/Secondary furnace, enable 2-stage thermostat on control board by:
   a. For boards with DIP switches, turn SW1-2 on furnace control ON, see Fig. 26.
   b. For boards with 3 digit display, navigate to (HEt) and select (2St), see Fig. 26. See furnace installation manual for additional instructions.
5. Connect first stage cooling thermostat lead Y1 to “Y/Y2”on the Main furnace control board.
6. Connect the second stage cooling thermostat lead Y/Y2 to the pilot duty relay coil for the second stage contactor. (R-410A only; for A2L (R-454B) refrigerant, see Fig. 23.
7. For A2L systems, connect the G thermostat lead to the A2L Power Harness wire labeled “G-STAT;” for non-A2L systems connect thermostat lead to “G” terminal on the Main furnace control board.
8. Connect thermostat R lead to “R” terminal on Main furnace control.
9. Connect thermostat C or COM lead to the “COM/24V” terminal on the Main furnace control board.

Table 6 – Single-Stage Thermostat Connections

Single-Stage Heating and Cooling with Single-Stage Thermostat Using Single-Stage Furnaces*		
THERMOSTAT CONNECTIONS	**CONTROL BOARD CONNECTION**	**ACTION**
C	C	Transformer Common
R	R	Power from control board to thermostat
W	A2L - Harness wire W/W1-STAT Non-A2L - W on Control Board	Starts LH and RH furnaces for heating
Y	Y/Y2 (Y on standard control board)	Energizes accessory cooling relay(s) to start LH and RH A/C for cooling
G	A2L - Harness wire G-STAT Non-A2L - G on Control Board	Starts both indoor fans on continuous fan speed
Dehum†	Dehum†	Reduces airflow in cooling mode when Dehum input is removed. See furnace manual for specifics.
Two-Stage Heating and Cooling with Two-Stage Thermostat Using Single-Stage Furnaces		
THERMOSTAT CONNECTIONS	**CONTROL BOARD CONNECTION**	**ACTION**
C	C	Transformer Common
R	R	Power from control board to thermostat
W1	W	Starts LH furnace for first stage heating
W2	None	Thermostat W2 wired directly to RH accessory relay to start RH Furnace for second stage heating
Y1	Y/Y2 (Y on standard control board)	Energizes accessory cooling relay to start LH and A/C for first stage cooling and cooling speed blower
Y2	None	Thermostat Y2 wired directly to RH accessory relay to start RH and A/C for second stage cooling
G	G	Starts both indoor fans on continuous fan speed
Dehum†	Dehum†	Reduces airflow in cooling mode when Dehum input is removed. See furnace manual for specifics.

*. Check all connections with the applicable twinning wiring diagram on the unit.
†. Dehum is not available on all thermostats or control boards

Table 7 – Two-Stage Furnace Thermostat Connections

THERMOSTAT CONNECTIONS	CONTROL BOARD CONNECTION	ACTION
Two-Stage Heating with Single-Stage Thermostat Using Two-Stage Furnaces		
C	C	Transformer Common
R	R	Power from control board to thermostat
W	A2L - Harness wire W/W1-STAT Non-A2L - W/W1 on Control Board	Starts LH and RH furnaces in low heat or high heat, as determined by LH furnace control board*
Y 1	Y/Y2	Energizes accessory cooling relay to start both A/C units for cooling
Y2	None	Thermostat Y2 wired directly to RH accessory relay to start RH and A/C for second stage cooling
G	A2L - Harness wire G-STAT Non-A2L - G on Control Board	Starts both indoor fans on continuous fan speed
Dehum*	Dehum†	Reduces airflow in cooling mode when Dehum input is removed. See furnace manual for specifics.
Two-Stage Heating with Two-Stage Thermostat Using Two-Stage Furnaces		
C	C	Transformer Common
R	R	Power from control board to thermostat
W1	A2L - Harness wire W/W1-STAT Non-A2L - W/W1 on Control Board	Starts both furnaces in low heat for first stage heating*
W2	W2	Starts both furnaces in high heat for second stage heating*
Y 1	Y/Y2	Energizes accessory cooling relay to start both A/C units for cooling
Y2	None	Thermostat Y2 wired directly to RH accessory relay to start RH and A/C for second stage cooling (R-410A only; for A2L (R-454B) refrigerant, see Fig. 23.
G	A2L - Harness wire G-STAT Non-A2L - G on Control Board	Starts both indoor fans on continuous fan speed
Dehum*	Dehum†	Reduces airflow in cooling mode when Dehum input is removed. See furnace manual for specifics.

*. Do not remove ACRDJ from furnace control boards
†. Dehum is not available on all thermostats or control boards
LHT switches must be in correct configuration

VENTING

Refer to Installation, Start-Up, and Operating Instructions supplied with each furnace for venting information. Each furnace must always be individually vented. Do not common-vent or breach-vent condensing furnaces. For allowable vent installations refer to furnace installation instructions for allowable configurations and proper termination. It is important that vent terminations be made as shown to avoid recirculation of flue gases.

GAS SUPPLY PIPING

All gas connections must be made through exposed outer side of each furnace. Do not common connect any connection other than supply and return-air ducts. Furnaces are recommended to be provided with a single shutoff valve. However, individual shutoff valves may be required by local codes or jurisdictions. Refer to Installation, Start-Up, and Operating Instructions provided with each furnace for additional gas supply information.

CONDENSATE DRAIN CONNECTIONS

For condensing furnaces, the condensate trap is factory installed in the furnace vestibule and factory connected for UPFLOW applications. Install condensate trap such that field drain connections are on the left side for LH (MAIN) furnace and on right side for RH (SECONDARY) furnace.

The condensate trap must be relocated for downflow and horizontal applications.

See furnace Installation, Start-Up, and Operating Instructions for details on relocating the condensate and attaching field drain connections.

START-UP AND ADJUSTMENT

⚠ WARNING

ELECTRICAL SHOCK, FIRE OR EXPLOSION HAZARD

Failure to follow this warning could result in personal injury or death, or property damage.

Before installing, modifying, or servicing system, main electrical disconnect switch must be in the OFF position and install a lockout tag. There may be more than one disconnect switch. Check accessories and cooling unit for additional electrical supplies that must be shut off during furnace servicing. Lock out and tag switch with a suitable warning label. Verify proper operation after servicing.

NOTE: Refer to Installation, Start-Up, and Operating Instructions supplied with furnace for detailed information.

1. Shut off all power and gas to both furnaces.
2. For control boards with display and push-buttons, set the twinning menu item on the Secondary Furnace to SEC as shown on wiring label. For two-stage furnaces, also set the heating thermostat type (HEt) as shown on wiring label.

NOTE: The secondary furnace blower will not run with cooling if this is not set correctly

3. Set the heating blower speed to the same setting or tap on both furnaces. Repeat for cooling and continuous fan speed settings.
4. Attach twinning connection wiring label above the existing furnace wiring label on the inside of the LH furnace blower door. Use the following labels for the following applications:

- Non-A2L with Single-Stage furnaces with single-stage thermostat, 347781-101
- Non-A2L Single-Stage furnaces with two-stage thermostat, 347780-101
- Non-A2L Two-Stage furnaces with single-stage or two-stage thermostat, 348927–101
- A2L AC with Single-Stage furnaces with single-stage thermostat, 351625-101
- A2L AC with Two-Stage furnaces with single-stage or two-stage thermostat, 351634-101

5. Attach ONE twinning reference label 351635-101 on the outside of blower access door of RH furnace. The remaining two labels are used only for A2L systems.
6. Place the remaining reference labels on the front cover of each dissipation control box label as the original label will not be accurate with the new power harness.

A240311

Fig. 27 – Example of Twinning Reference Label

7. Manually close the door switch on both furnaces.
8. Turn on power and gas to furnaces.
9. For control boards with display and pushbuttons, observe the 3 digit display on both furnaces. When the display is showing system status, the dots at the bottom of the display indicate the communication status of the primary and secondary furnaces as shown in Fig. 28.

- Solid light = unit is communicating
- Flashing light = unit has lost communication
- No light = unit is not communicating

If the lights do not activate, check TWIN wire connection and confirm that the twinning (tnn) selection is set correctly on each furnace. See wiring label for correct settings. Next, cycle power.

NOTE: The indicators are not valid while the display is showing a fault code.

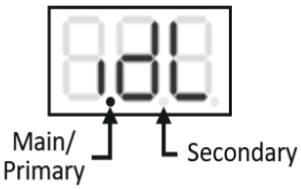

A221466

Fig. 28 – Twinning Communication Indicator

10. Using the appropriate section below, operate furnaces through two cycles in each mode to confirm correct operation by operating only the thermostat.
    a. Single- or two-stage gas heating thermostat R to W/W1 for low-heat. Single-stage thermostat with adaptive heating mode causes furnace to operate in low-heat mode for up to 16 minutes, and then furnace automatically switches to high-heat. First stage of a two-stage thermostat without adaptive heating mode causes furnace to operate in low-heat mode indefinitely.
    b. First and second-stage of two-stage heating thermostat R to W/W1 and W2 for high-heat.
    c. Thermostat R to G for continuous fan (Table 6 or Table 7).
    d. Cooling thermostat R to G and Y or Y/Y2 for single stage cooling blower or for two-stage cooling high-cool blower.
11. Reinstall doors on both furnaces.
12. Instruct user in operation of furnaces and thermostat.

SEQUENCE OF OPERATION

See furnace twinning connection and schematic wiring diagrams while reviewing sequence of operation.

Twinning operation is controlled by LH or MAIN furnace. The TWIN/TEST connection wire ensures the two furnaces coordinate their blower and heating stage operation. When either furnace requires blower operation, both furnace blowers operate at same speed. Both furnaces operate simultaneously in the same mode: heat, cool, or continuous fan. Exceptions can occur if a safety switch on either furnace is opened by a problem (such as pressure switch, flame roll-out switch, main limit switch, twinning kit auxiliary limit switch, or flame-proving sensor). In such a case, the other furnace continues to operate unless open switch is the flame roll-out, main limit, or twinning kit auxiliary limit switch, in which case both furnaces respond.

Before performing component test, disconnect TKR yellow wire labeled TEST from LH furnace control center TWIN/TEST terminal. After removing yellow wire, component test can be initiated on each furnace individually as stated in Installation, Start-Up, and Operating Instructions.

SINGLE-STAGE HEAT, SINGLE-STAGE FURNACES WITH SINGLE-STAGE THERMOSTAT

1. Operation in all modes (sequence of operation) is the same for twinned furnaces as for an individual furnace. See furnace Installation, Start-Up, and Operating Instructions for more information on the sequence of operation.

TWO-STAGE HEAT, SINGLE-STAGE FURNACES WITH TWO-STAGE THERMOSTAT

1. The two-stage thermostat determines if furnaces are operating in first-stage heat (LH furnace operates in heat while RH furnace blower operates but RH furnace is not heating) or if furnaces are operating in second-stage heat (both furnaces operate in heat), depending on how many thermostat stages are calling for heat. If two-stage cooling is used, Y1 from the thermostat will initiate both furnace blowers to the cooling speed and the first A/C unit. Y2 from the thermostat will go directly to the outdoor unit and initiate the second A/C unit.
2. Operation in all modes (sequence of operation) is the same for twinned furnaces as for an individual furnace. See furnace Installation, Start-Up, and Operating Instructions for more information on sequence of operation.

TWO-STAGE HEAT, TWO-STAGE FURNACES WITH SINGLE-STAGE THERMOSTAT

NOTE: See Electrical Connections for control board wiring and HtE menu setting or LHT switch setup switch depending on model (Fig. 29 and Table 8)

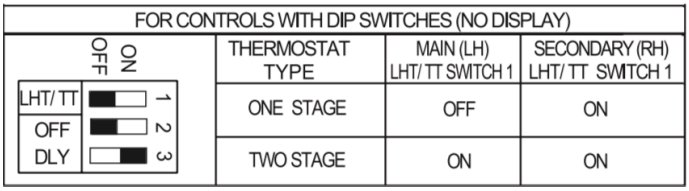

A221465

Fig. 29 – Furnace Thermostat Switch

Table 8 – Setup Selection

For Controls with Display and Pushbuttons			
Thermostat Type	**Menu**	**Selection Main (LH)**	**Selection Secondary (RH)**
Both	tnn	Pri	SEC
One Stage	Htt	1st	2st
Two Stage	Htt	2st	2st

1. LH furnace control determines whether furnaces are both operating in low-heat or high-heat, depending on the control's adaptive gas heating mode when the R-to-W/W1 circuit is closed in LH furnace.
2. Operation in all modes (sequence of operation) is the same for twinned furnaces as for an individual furnace. See furnace Installation, Start-Up, and Operating Instructions for more information on sequence of operation.

TWO-STAGE HEAT, TWO-STAGE FURNACES WITH TWO-STAGE GAS-HEAT THERMOSTAT

NOTE: See Electrical Connections for control board wiring and HtE menu setting or LHT switch setup switch depending on model.(See Fig. 29 and Table 8)

1. The two-stage thermostat (NOT the furnace control's adaptive gas heating mode) determines whether furnaces are both operating in low-heat or high-heat, depending on whether one or both thermostat stages (W/W1 or W/W1 and W2) are calling for heat.
2. Operation in all modes (sequence of operation) is the same for twinned furnaces as for an individual furnace. See furnace Installation, Start-Up, and Operating Instructions for more information on sequence of operation.

SECTION 4

DISSIPATION SYSTEM OPERATIONAL TEST

WARNING

Failure to follow this warning could result in personal injury or equipment damage.

When using A2L (R-454B) refrigerant, the Power Wire Harness **must** be used for the agency required leak detection and dissipation system to function properly.

Proper wiring is essential for this operation so a pre-check after initial wiring of equipment is required to verify correct operation as mentioned above. Use the A2L DISSIPATION CONTROL label diagrams to verify wiring. Simulate leak by pressing Test on dissipation control for 1 second.

Ensure that each component of the system responds as indicated by Off/On designators in Table 9 below. Repeat for each type of thermostat call and then repeat for the second dissipation control.

Table 9 – Required Operational Checks to Ensure Proper Dissipation System Function

Normal Operation				
Test #	**T-Stat Call**	**Compressor**	**Indoor Fan**	**Electric/Gas Heat**
1	None	Off	Off	Off
2	Cool	On	On	Off
3	Heat	Off	On	On
Dissipation Activated				
4	None	Off	On	Off
5	Cool	Off	On	Off
6	Heat	Off	On	Off

© 2026 Carrier. All rights reserved.

Manufacturer reserves the right to change, at any time, specifications and designs without notice and without obligations.