VARIABLE FREQUENCY DRIVE (VFD)
FACTORY-INSTALLED OPTION
2-SPEED MOTOR CONTROL
FOR 2-STAGE COOLING UNITS

bryant®

Installation, Setup & Troubleshooting Supplement

This document provides supplemental installation, setup and troubleshooting information for the Variable Frequency Drive (VFD) factory-installed option. It is to be used with the base unit Installation Instructions for 580J/558J, 548J, 581J/551J, 549J, 524J*A and 524***H 2-Stage cooling units, sizes 07 – 30. Units equipped with the VFD are identified by an indicator in the unit's model number (see the unit's nameplate). Use Table 1 to identify whether or not a given unit is equipped with the factory-installed VFD option.**

NOTE: Read the entire instruction manual before starting the installation.

C11526

Fig. 1 - Variable Frequency Drive (VFD)

TABLE OF CONTENTS

SAFETY CONSIDERATIONS 1
GENERAL 2
Variable Frequency Drive (VFD) Option — 2-Speed Indoor Fan Motor System 2
Identifying Factory Option 2
Unit Installation with VFD Option 2
Pre-Start Check, VFD Option 9
START-UP, VFD Option 9
Cooling with 2-Speed Indoor Fan Motor Option 9
Operating Sequences, 2-Speed Indoor Fan Motor System Option 9
Ventilation (Fan Only) 9
Cooling (FAN switch in AUTO) 9
Heating 10
Operating Fan for Test & Balance 10
Unit without Accessory Keypad 10
Unit with Accessory VFD Keypad 11
Service 12
Central Terminal Board Jumpers (581J/551J/549J/580J/558J/548J-Series Only) 15
VFD ALARMS AND FAULTS TROUBLESHOOTING . . 15
VFD Maintenance 19
APPENDIX - REMOTE VFD KEYPAD REFERENCE . . 20

SAFETY CONSIDERATIONS

⚠ CAUTION

CONFIGURATION OVERRIDE HAZARD

DO NOT USE ABB OR CARRIER START-UP ASSISTANT ON THIS VFD APPLICAITON! Use of start-up assistant will override the factory VFD configurations!

Improper installation, adjustment, alteration, service, maintenance, or use can cause explosion, fire, electrical shock or other conditions which may cause personal injury or property damage. Consult a qualified installer, service agency, or your distributor or branch for information or assistance. The qualified installer or agency must use factory-authorized kits or accessories when modifying this product. Refer to the individual instructions packaged with the kits or accessories when installing.

Follow all safety codes. Wear safety glasses and work gloves. Use quenching cloths for brazing operations and have a fire extinguisher available. Read these instructions thoroughly and follow all warnings or cautions attached to the unit. Consult local building codes and appropriate national electrical codes (in USA, ANSI/NFPA70, National Electrical Code (NEC); in Canada, CSA C22.1) for special requirements.

It is important to recognize safety information. This is the safety-alert symbol ⚠. When you see this symbol on the unit and in instructions or manuals, be alert to the potential for personal injury.

Understand the signal words DANGER, WARNING, CAUTION, and NOTE. These words are used with the safety-alert symbol.

DANGER identifies the most serious hazards which **will** result in severe personal injury or death. WARNING signifies hazards which **could** result in personal injury or death.

CAUTION is used to identify unsafe practices, which **may** result in minor personal injury or product and property damage.

NOTE is used to highlight suggestions which **will** result in enhanced installation, reliability, or operation.

⚠ WARNING

ELECTRICAL SHOCK HAZARD

Failure to follow this warning could cause personal injury or death.

Before performing service or maintenance operations on unit, always turn off main power switch to unit and install lock(s) and lockout tag(s). Unit may have more than one power switch. Ensure electrical service to rooftop unit agrees with voltage an amperage listed on the unit rating plate.

⚠ CAUTION

CUT HAZARD

Failure to follow this caution may result in personal injury.

Sheet metal parts may have sharp edges or burrs. Use care and wear appropriate protective clothing, safety glasses and gloves when handling parts and servicing air conditioning equipment.

GENERAL

Variable Frequency Drive (VFD) Option — 2-Speed Indoor Fan Motor System

The 2-Speed Indoor Fan system utilizes a Fan Speed control board and Variable Frequency Drive (VFD) to automatically adjust the indoor fan motor speed in sequence with the unit's ventilation, cooling and heating operation. Per ASHRAE 90.1 2010standard section 6.4.3.10.b, during the first stage of cooling operation the VFD option will adjust the fan motor to provide two-thirds (2/3) of the design airflow rate for the unit. When the call for the second stage of cooling is required, the VFD option will allow the design airflow rate for the unit established (100%). During the heating mode, the VFD option will allow total design airflow rate (100%) operation. During ventilation mode, the VFD option will operate the fan motor at 2/3 speed.

Identifying Factory Option

This supplement only applies to units that meet the criteria detailed in Table 1. If the unit does not meet that criteria, discard this document.

Table 1 – Model-Size / VFD Option Indicator

Model – Sizes	Position in Model Number	VFD FIOP Indicator
580J/558J*08–30	17	D, E, F
548J*08–24	17	D, E, F
581J/551J*08–28	17	D, E, F
549J*08–12	17	D, E, F
524J*07A–28A	9	2
524J*07H–25H	9	2

NOTE: See Figs. 2 and 3 (on page 3) for examples of typical Model Number Nomenclature.

NOTE: 07 size scheduled for late 2015 production.

Unit Installation with VFD Option

581J/558J, 548J, 581J/551J, 549J Rooftop — Refer to the base unit installation instructions for standard required operating and service clearances.

524J without Remote VFD Keypad — Additional service clearance is required on the rear for 524J fan coil unit equipped with the VFD option. Increase the recommended rear panel clearance to 30 inches.

524J with Remote VFD Keypad — Refer to the base unit installation instructions for standard required operating and service clearances. Install the accessory Remote VFD Keypad before positioning the 524J unit in its final operating location.

NOTE: The Remote VFD Keypad is a field-installed option. It is not included as part of the Factory installed VFD option.

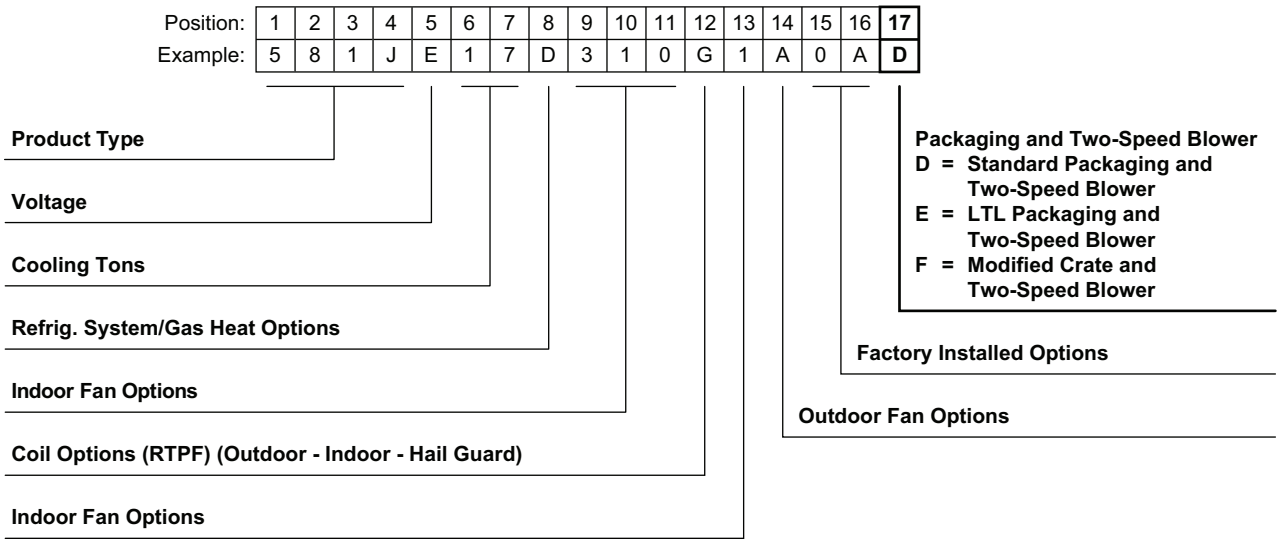

C11546

Fig. 2 - Model Number Nomenclature Example, 580J/558J/548J/581J/551J/549J–Series

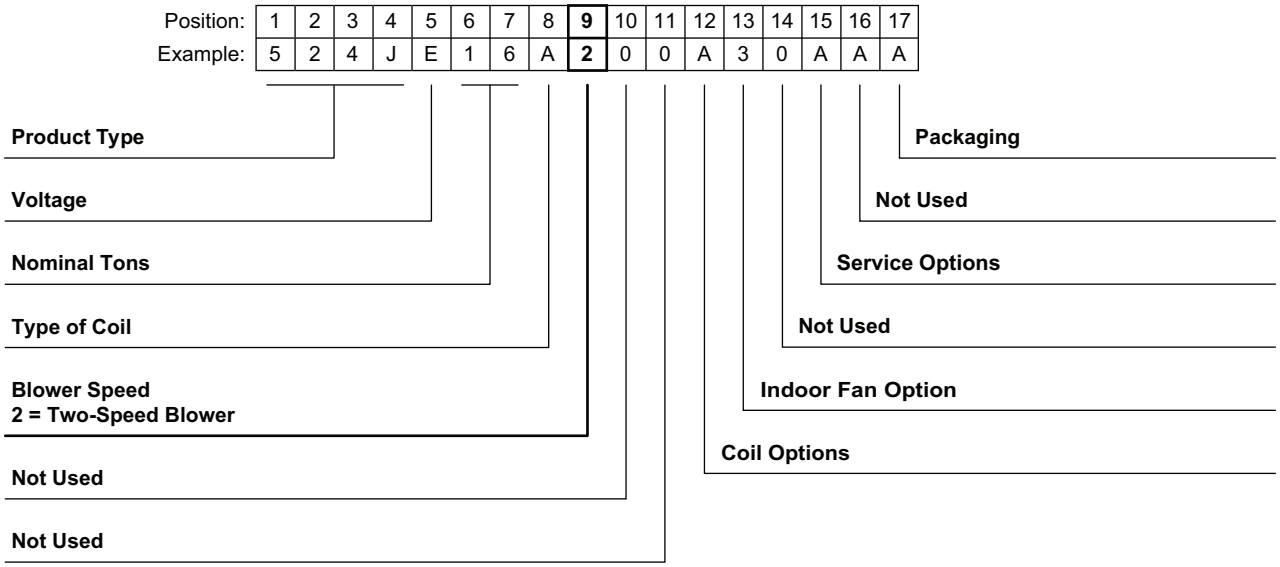

C12037

Fig. 3 - Model Number Nomenclature Example, 524J–Series

IMPORTANT: **Do NOT** change units equipped with the VFD option to operate at less than the pre-set two-thirds minimum Hz setting (40 Hz). For example do not change a unit equipped with a standard static motor to operate at less than 40Hz (which is two-thirds of its 60Hz rating).

Tables 2 through 9 list the minimum recommended CFM per fan motor type (Single Speed or 2-Speed) for the units covered in this document.

Table 2 – 580J Min CFM Per Fan Motor Type

Model – Size	Single Speed Fan Motor	2–Speed Fan Motor (at high speed)	2–Speed Fan Motor (at low speed)
580J*08	2250	2250	1485
580J*09	2550	2873	1896
580J*12	3000	3380	2231
580J*14	3600	4225	2789
580J*16	4500	5625	3713
580J*17	4500	4500	2970
580J*20	5250	5250	3465
580J*24	6000	6000	3960
580J*28	7500	8450	5577
580J*30	8250	8250	5445

Table 3 – 558J Min CFM Per Fan Motor Type

Model – Size	Single Speed Fan Motor	2–Speed Fan Motor (at high speed)	2–Speed Fan Motor (at low speed)
558J*08	2250	2250	1485
558J*09	2550	2873	1896
558J*12	3000	3380	2231
558J*14	3600	4225	2789
558J*16	4500	5625	3713
558J*17	4500	4500	2970
558J*20	5250	5250	3465
558J*24	6000	6000	3960
558J*28	7500	8450	5577
558J*30	8250	8250	5445

Table 4 – 548J Min CFM Per Fan Motor Type

Model – Size	Single Speed Fan Motor	2–Speed Fan Motor (at high speed)	2–Speed Fan Motor (at low speed)
548J*08	2250	2535	1673
548J*09	2550	2873	1896
548J*12	3000	3000	1980
548J*14	3750	4225	2789
548J*17	4500	5070	3346
548J*24	6000	6760	4462

Table 5 – 581J Min CFM Per Fan Motor Type

Model – Size	Single Speed Fan Motor	2–Speed Fan Motor (at high speed)	2–Speed Fan Motor (at low speed)
581J*08	2250	2535	1673
581J*09	2550	2550	1683
581J*11	3000	3380	2231
581J*12	3000	3380	2231
581J*14	3750	4225	2789
581J*17	4500	5070	3346
581J*20	5250	5915	3904
581J*24	6000	7500	4950
581J*28	7500	8450	5577

Table 6 – 551J Min CFM Per Fan Motor Type

Model – Size	Single Speed Fan Motor	2–Speed Fan Motor (at high speed)	2–Speed Fan Motor (at low speed)
551J*08	2250	2535	1673
551J*09	2550	2550	1683
551J*11	3000	3380	2231
551J*12	3000	3380	2231
551J*14	3750	4225	2789
551J*17	4500	5070	3346
551J*20	5250	5915	3904
551J*24	6000	7500	4950
551J*28	7500	8450	5577

Table 7 – 549J Min CFM Per Fan Motor Type

Model – Size	Single Speed Fan Motor	2–Speed Fan Motor (at high speed)	2–Speed Fan Motor (at low speed)
549J*08	2250	2250	1485
549J*09	2550	2873	1896
549J*12	3000	3380	2231

Table 8 – 524J*A Min CFM Per Fan Motor Type**

Model – Size	Single Speed Fan Motor	2–Speed Fan Motor (at high speed)	2–Speed Fan Motor (at low speed)
524J*07A	1800	2030	1338
524J*08A	2250	2535	1673
524J*12A	3000	3380	2231
524J*14A	3750	4225	2789
524J*16A	4500	4500	2970
524J*25A	6000	6000	3960
524J*28A	7500	8450	5577

Table 9 – 524J*H Min CFM Per Fan Motor Type**

Model – Size	Single Speed Fan Motor	2–Speed Fan Motor (at high speed)	2–Speed Fan Motor (at low speed)
524J*07H	1800	2030	1338
524J*08H	2250	2535	1673
524J*12H	3000	3380	2231
524J*16H	4500	4500	2970
524J*25H	6000	6000	3960

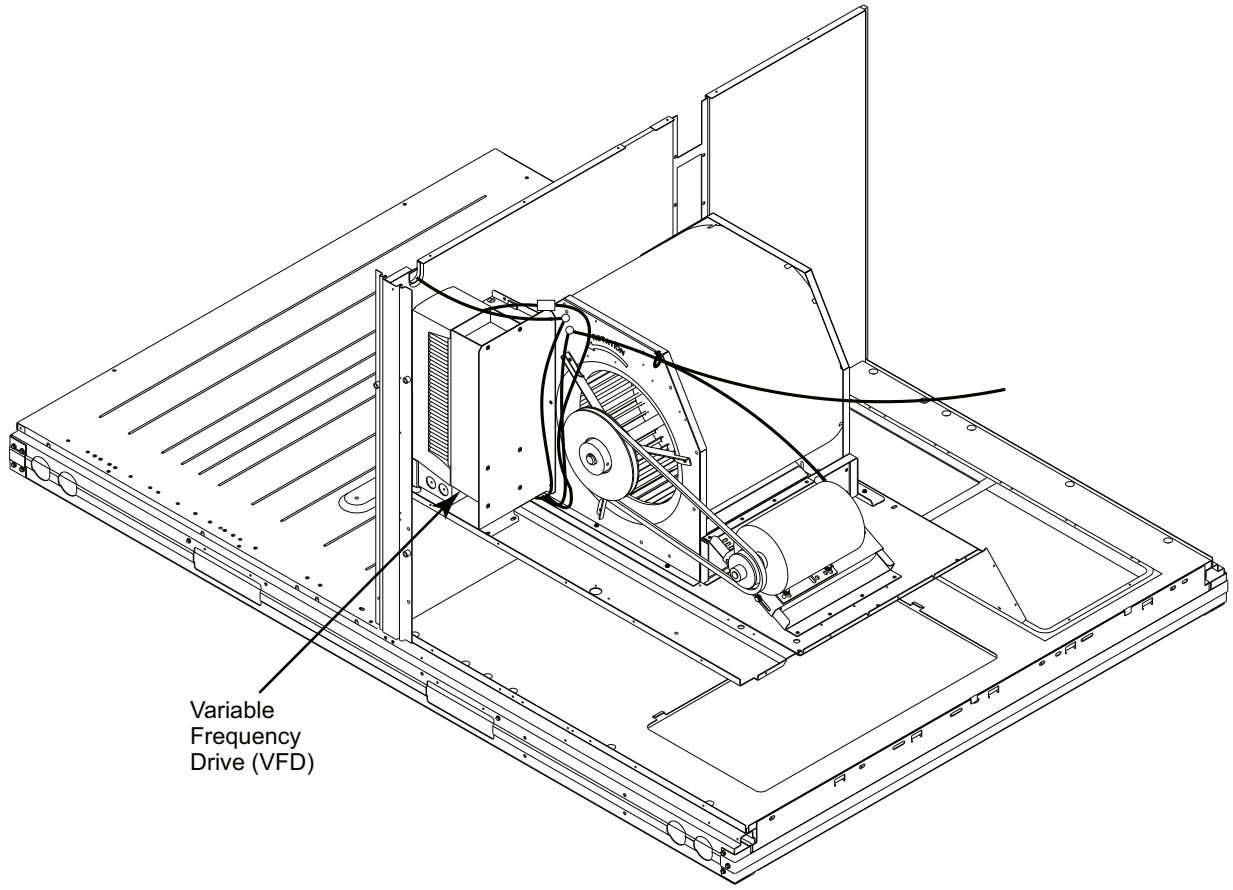

C11528

Fig. 4 - VFD Location for the following units: 580J/558J*08-12, 548J*08-09, 581J/551J*08-09 and 549J*08

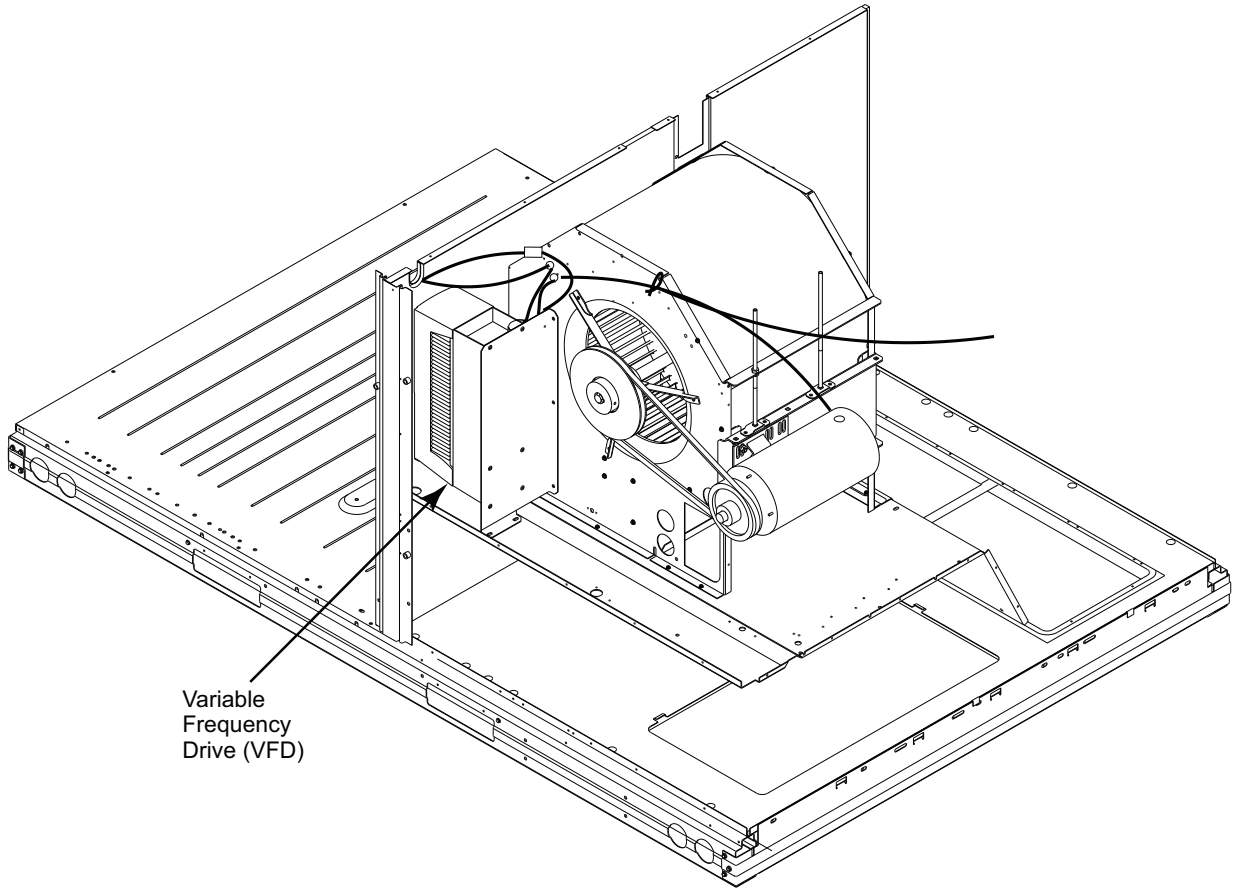

C11529

Fig. 5 - VFD Location for the following units: 580J/558J*14, 548J*12, 581J/551J*12 and 549J*09

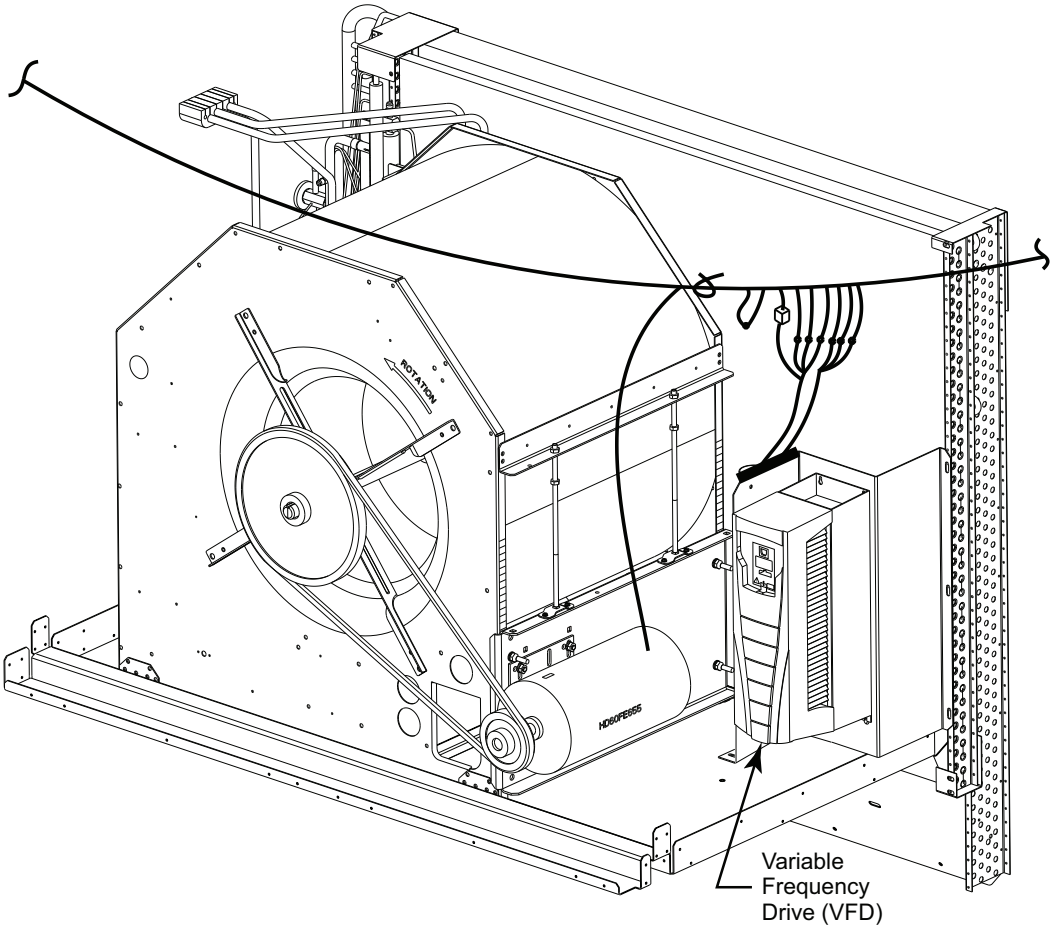

C11530

Fig. 6 - VFD Location for the following units: 580J/558J*16, 548J*14, 581J/551J*14 and 549J*12

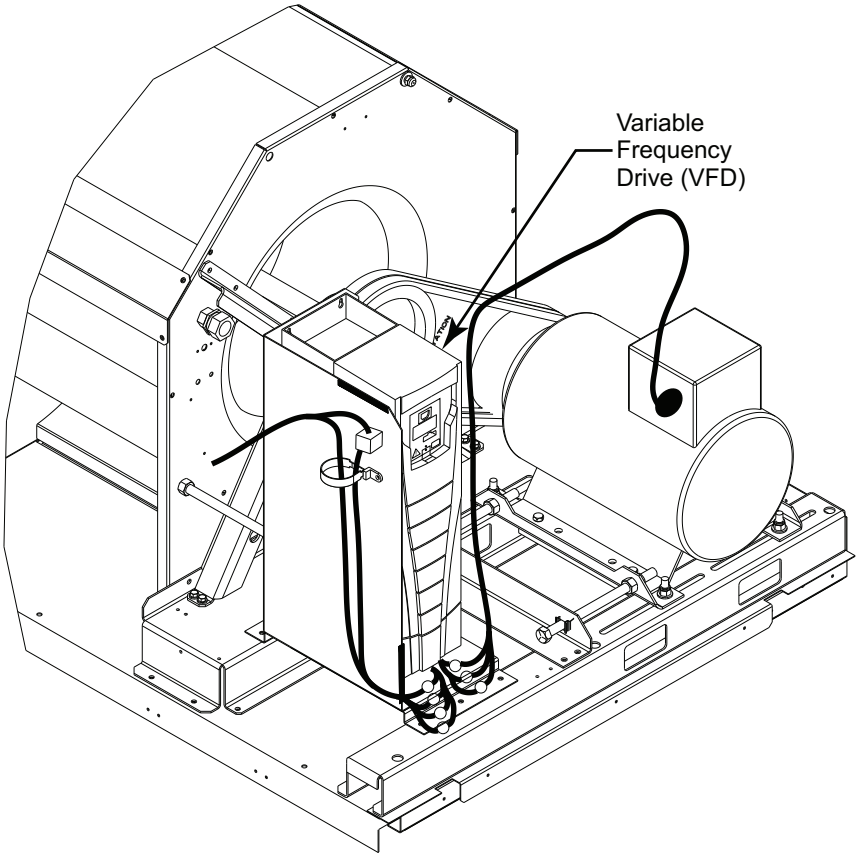

C11531

Fig. 7 - VFD Location for the following units: 580J/558J*17-30, 548J*17-24 and 581J/551J*17-28

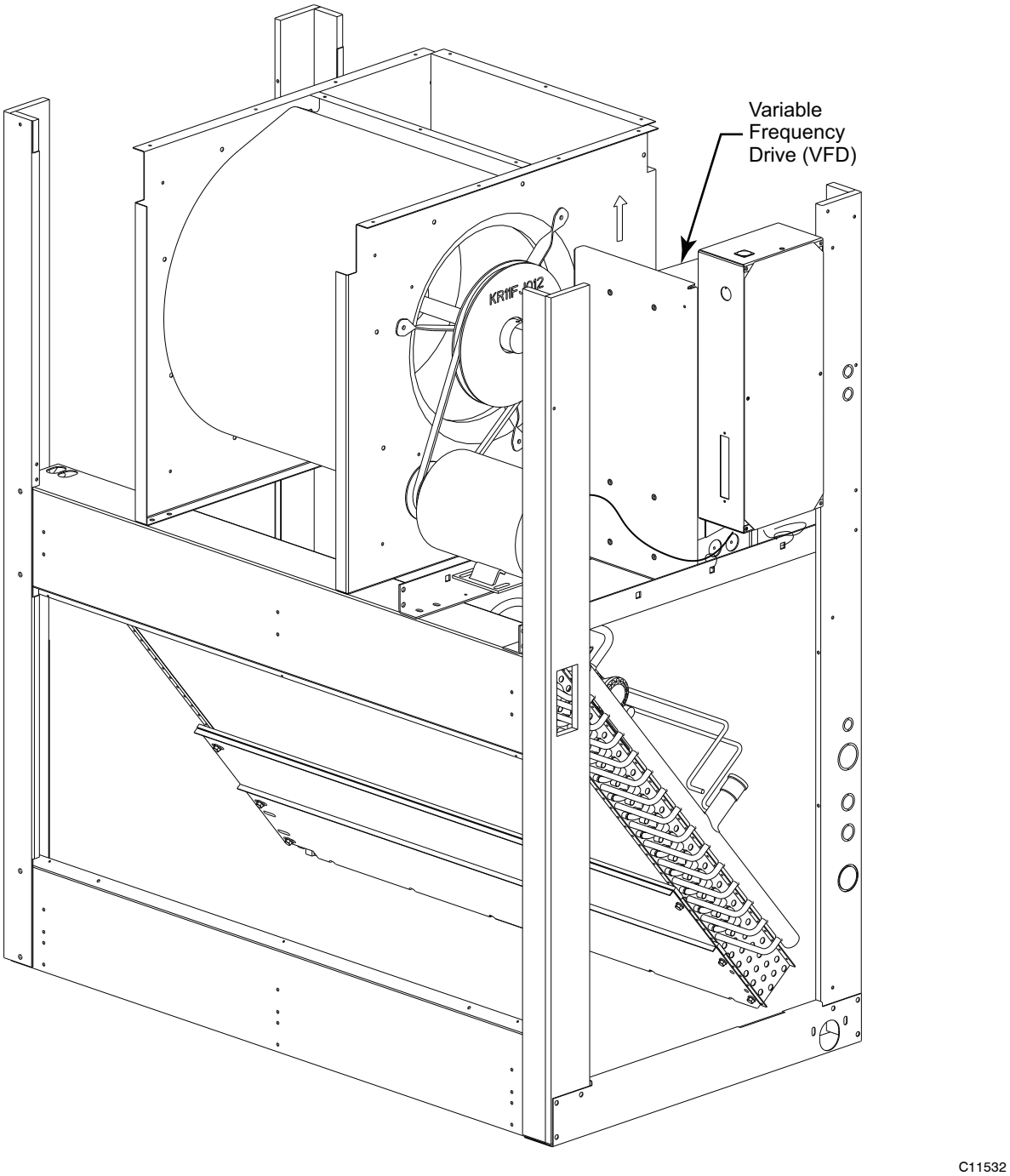

Fig. 8 - VFD Location for the following units: 524J*07-12A and 524J*07-12H

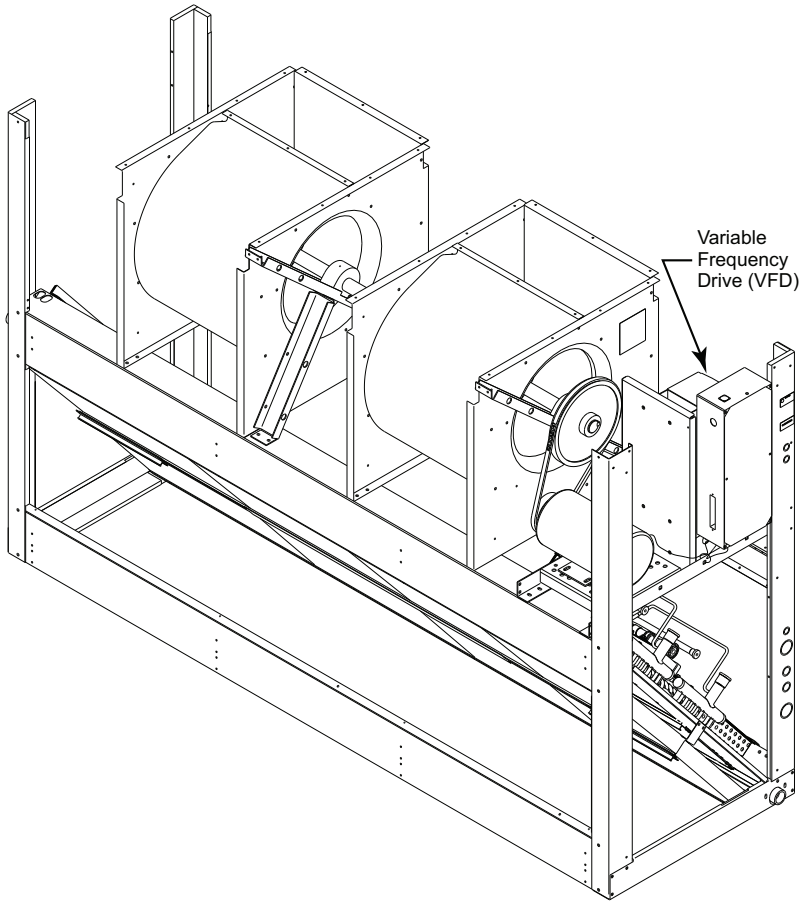

C11533

Fig. 9 - VFD Location for the following units: 524J*14A - 524J*25A and 524J*16H - 524J*25H

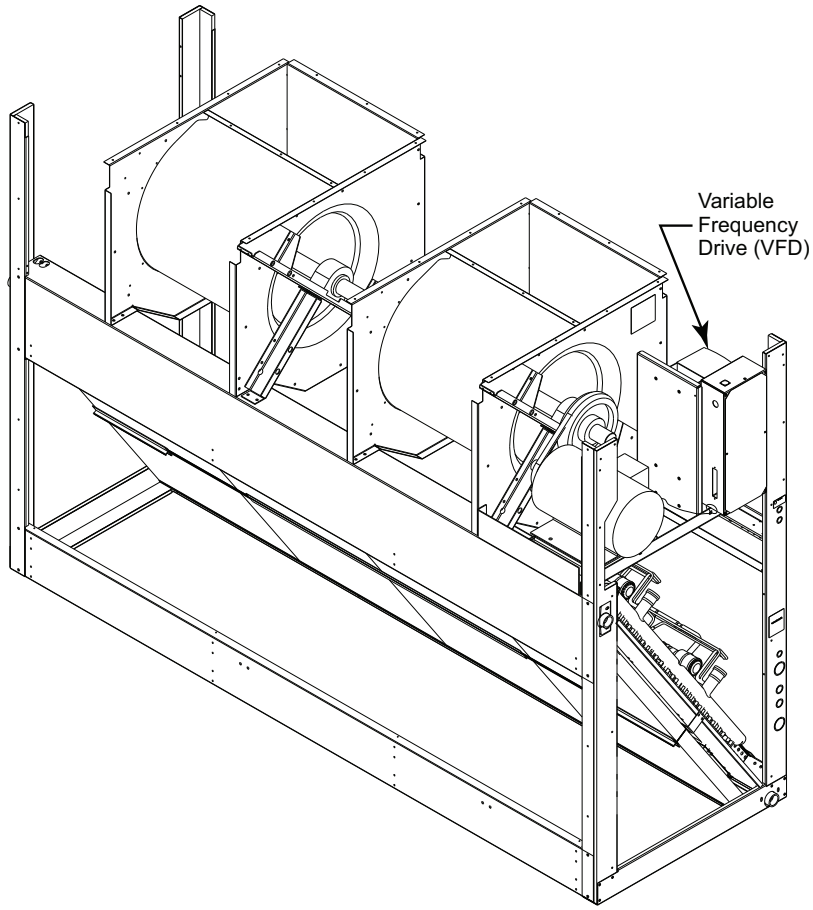

C11534

Fig. 10 - VFD Location for the following unit: 524J*28A

Pre-Start Check, VFD Option

1. Remove the access panel to reach the VFD.
   - 580J/558J/548J/581J/551J/549J Series: Blower compartment panel
   - 524J: Rear access panel

NOTE: See Figs. 4 through 10 for VFD location in the units covered by this document.

2. Read all safety, caution and warning labels.
3. Inspect wiring at the VFD for loose or disconnected wires at the terminal strip and for wires in contact with sharp edges and moving parts (pulley, belt,).

START-UP, VFD Option

Compressor Rotation:

Units equipped with a VFD on the indoor fan motor cannot use rotation direction of the indoor fan motor and fan to visually confirm a correct phase connection to the unit and compressors. Pressure gages MUST BE USED during cooling system start-up to confirm correct compressor rotation and operation.

Indoor Fan Motor:

Raise the cooling set point at the space thermostat to higher than space temperature. Switch the thermostat's FAN switch to CONT (Continuous) position. Fan motor will start, run at reduced speed.

Check for fan rotation direction. To reverse the fan rotation, disconnect all power to unit and then switch two motor power leads between the VFD and the motor. Restore unit power and recheck fan rotation direction.

Check fan motor speed. Motor shaft should be rotating at 1150-1180 RPM (19.2-19.7 r/s).

Switch the thermostat's FAN switch to AUTO position. Fan motor will stop.

Cooling with 2-Speed Indoor Fan Motor Option:

1st Stage (Y1): Set the thermostat FAN switch to AUTO and the SYSTEM switch to COOL. Slowly lower the cooling setpoint until first stage compressor starts. Indoor fan motor also starts, runs at reduced speed.

2nd Stage (Y2): Lower the cooling setpoint until second stage compressor starts. Indoor fan motor will switch to high speed.

Check fan motor speed. Motor shaft should be rotating at 1725-1760 RPM (28.8-29.3 r/s).

Confirm compressors are running at correct rotation by checking suction and discharge pressures. To reverse the compressor rotation, disconnect unit power and switch two of the unit's main power leads. Restore unit power and recheck compressor operation.

Reset thermostat cooling setpoint to a position above space temperature. Both compressors will shut off. Indoor fan motor will stop immediately.

524J, 558J/551J/548J/549J-Series units: Indoor fan motor will stop immediately.

580J/581J-Series units: Indoor fan operation will continue for 45-seconds, then stop.

Operating Sequences, 2-Speed Indoor Fan Motor Option

Ventilation (Fan only)

Ventilation mode occurs when the indoor fan runs without accompanying cooling or heating system operation. The thermostat's FAN selection switch will be in CONT (Continuous) position; no demand for cooling or heating will be present.

580J/581J-Series units: The thermostat's G terminal is energized with 24-v. This signal is conveyed to the 580J/581J-Series unit's Central Terminal Board (CTB) at the field connection TSTAT terminal strip at terminal G. The 24-v signal follows an internal trace path through jumper JMP6 to connector CONTL BOARD pin 1. A harness wire connects pin 1 to IGC board terminal G. The IGC energizes its fan relay, energizing IGC terminal IFO. This 24-v signal follows a harness conductor back to the CTB's CONTL BOARD connector at pin 6 and pin 7. Pin 7 is connected to the Fan Speed Board at connector J1 pin 4. Relay K3 is energized. A 24-VDC signal is passed to the VFD terminal 14. The VFD starts the indoor fan motor and runs it at 40HZ for reduced/low speed operation.

558J/551J-Series units: The thermostat's G terminal is energized with 24-v. This signal is conveyed to the 558J/551J-Series unit's Control Terminal Board (CTB) at the field connection TSTAT terminal strip at terminal G. The 24-v signal follows an internal trace path through jumper JMP6 to connector CONTL BOARD pin 1. A harness wire connects pin 1 to the Fan Speed Board at connector J1 pin 4. Relay K3 is energized. A 24-VDC signal is passed to the VFD terminal 14. The VFD starts the indoor fan motor and runs it at 40HZ for reduced/low speed operation.

548J/549J-Series: The thermostat's G terminal is energized with 24-v. This signal is conveyed to the 548J/549J-Series unit's Control Terminal Board (CTB) at the field connection TSTAT terminal strip at terminal G. The 24-v signal follows an internal trace path to connector REHEAT/DEFROST pin 1. A harness wire connects pin 1 to DFB board terminal P2-3. The DFB energizes its fan relay, energizing DFB terminal P3-8. This 24-v signal follows a harness conductor back to the CTB's REHEAT/DEFROST pin 2. An internal trace path connects pin 2 to CONTL BOARD connector at pin 1. Pin 1 is connected to the Fan Speed Board at connector J1 pin 4. Relay K3 is energized. A 24-VDC signal is passed to the VFD terminal 14. The VFD starts the indoor fan motor and runs it at 40HZ for reduced/low speed operation.

Cooling (FAN switch in AUTO)

1st Stage (Y1): When the thermostat initiates a call for 1st Stage Cooling by closing its Y1 contacts, the thermostat also energizes its G terminal. Follow the sequence under Ventilation above. Fan Speed Relay board relay K3 is energized, causing the VFD to start the indoor fan motor and run at 40HZ for reduced fan speed operation.

When space temperature drops to satisfy the thermostat Y1 demand, contact Y1 opens de-energizing terminal G. Relay K3 is de-energized. The relay board output at J2-2 to the VFD is removed and indoor fan motor ramps down to stop.

2nd Stage (Y2): If space temperature continues to rise, thermostat Y2 demand will be initiated. Contact Y2 will close, sending a 24-v signal to CTB's TSTAT terminal strip at Y2. An internal path passes this signal to connector DDC/TSTAT pin 6. A harness wire carries this signal to Fan Speed Relay board pin J1-3. Relay K2 is energized. The relay board's output to VFD at pin J2-2 is de-energized and the output at J2-3 is energized, causing the VFD to shift its output to the indoor fan motor to 60HZ. The indoor fan motor ramps up to full/high speed operation.

When the space temperature drops to satisfy thermostat Y2 demand, contact Y2 opens de-energizing terminal Y2. Relay K2 is de-energized, removing the VFD input at terminal 15. Fan Speed Board output at pin J2-2 is restored to the VFD at terminal 14; VFD shifts back to 40HZ output to the indoor fan motor and motor shifts back to reduced speed operation.

Heating

When the thermostat initiates a call for 1st Stage Heating by closing its W1 contacts, a 24-v signal is conveyed to the CTB's TSTAT terminal strip at W1. An internal path passes this signal to connector DDC/TSTAT pin 5. A harness wire carries this signal to Fan Speed Relay board pin J1-2. Relay K1 is energized. The relay board's output to VFD at pin J2-3 is energized, providing a 24-VDC signal to VFD terminal 15. The VFD starts the indoor fan motor, runs at 60HZ for full/high speed operation.

When space temperature rises to satisfy the thermostat W1 demand, contact W1 opens de-energizing terminal W1. Relay K1 is de-energized. The relay board output at J2-3 to the VFD is removed.

524J, 558J/551J/548J/549J-Series: Indoor fan motor ramps down to stop.

580J/581J-Series: The IGC's fan-off delay sequence will energize relay K3 for 45-seconds, causing the VFD to operate the indoor fan motor at 40HZ (low speed) for 45-seconds, then indoor fan motor will ramp down to stop.

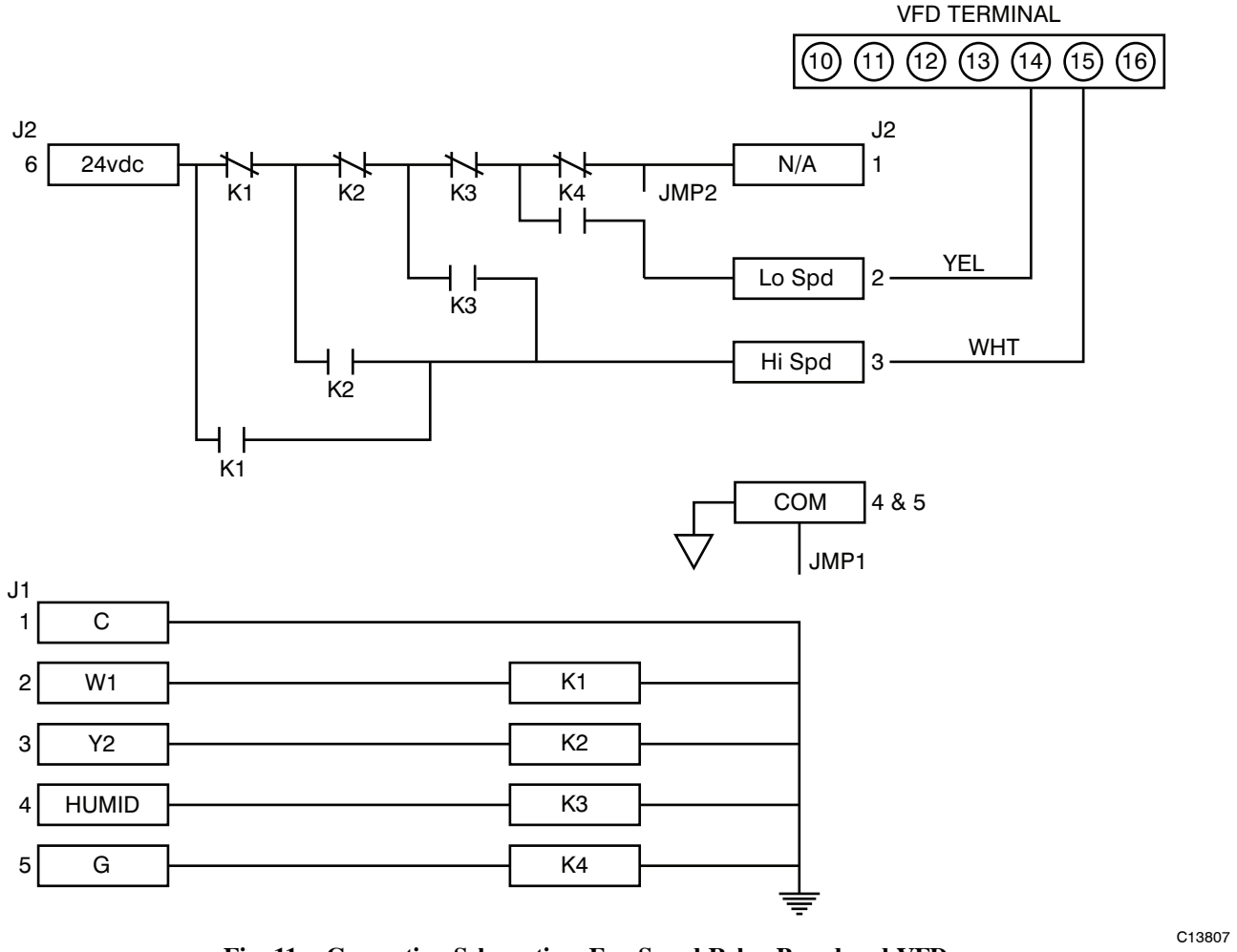

Fig. 11 - Connection Schematic – Fan Speed Relay Board and VFD.

Operating Fan for Test & Balance

During the Test and Balance procedure, it is necessary to operate the supply fan in High Speed without concurrent operation of the Cooling or Heating systems. Use the following procedure to force the fan speed to High.

CAUTION — MOVING PARTS

Unit without Accessory Keypad:

1. Set the space thermostat to SYSTEM OFF and FAN in AUTO.
2. Disconnect unit power. Lock-out/tag out.
3. Open the fan access panel and locate the VFD (see Figs. 4 through 10 for your specific unit).
4. Locate and connect the WHT and YEL wires extending from the VFD. The two wires are bundled together using the label shown in Fig. 12.

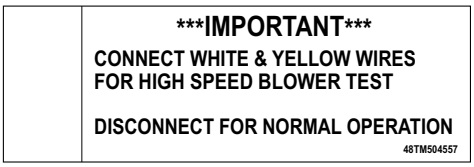

C150116

Fig. 12 - High Speed Test Label

5. Locate pressure ports or pitot tubes in the return duct and supply duct to measure external static pressure. See Fig. 13 for typical locations.
6. Restore unit power.
7. Set the space thermostat to FAN CONT.
8. Check the motor speed with stroboscope or similar tool. Motor shaft speed must be in 1725-1760 RPM (28.8-29.3 r/s) range for High Speed.
9. Replace the fan access panel.
10. Perform Test & Balance procedure.
11. Adjust the supply fan speed according to base unit instructions to deliver the project selection CFM value. Ensure the selection CFM value is not lower that the "Min CFM Per Fan Motor Type" for this unit-size as found in Tables 2 through 9 on page NO TAG.

To restore the unit to ready-to-start condition, disconnect the unit power and lock-out/tag-out, set the space thermostat to FAN AUTO, remove the test pressure ports from the external duct locations, and disconnect the WHT and YEL wires. Replace the supply fan access panel. Restore unit power.

Unit with Accessory VFD Keypad:

1. Set the space thermostat to SYSTEM OFF and FAN in AUTO.
2. Disconnect unit power. Lock-out/tag out.
3. Open the fan access panel (see Figs. 4 through 10 for your specific unit).
4. Locate pressure ports or pitot tubes in the return duct and supply duct to measure external static pressure. See Fig. 13 for typical locations.
5. Restore unit power.
6. Set the space thermostat to FAN CONT.
7. At the VFD keypad, tap the HAND key and then tap the UP arrow button to increase the motor speed until 60.0 is displayed on the display screen.
8. Check the motor speed with stroboscope or similar tool. Motor shaft speed must be in 1725-1760 RPM (28.8-29.3 r/s) range for High Speed.
9. Replace the fan access panel.
10. Perform Test & Balance procedure.
11. Adjust the supply fan speed according to base unit instructions to deliver the project selection CFM value. Ensure the selection CFM value is not lower that the "Min CFM Per Fan Motor Type" for this unit-size as found in Tables 2 through 9 on page 4.

To restore the unit to ready-to-start condition, tap the DOWN arrow button to reduce motor speed until the 40.0 is displayed on the display screen and then tap the AUTO key. Disconnect the unit power and lock-out/tag-out, set the space thermostat to FAN AUTO. Remove the test pressure ports from the external duct locations. Restore unit power.

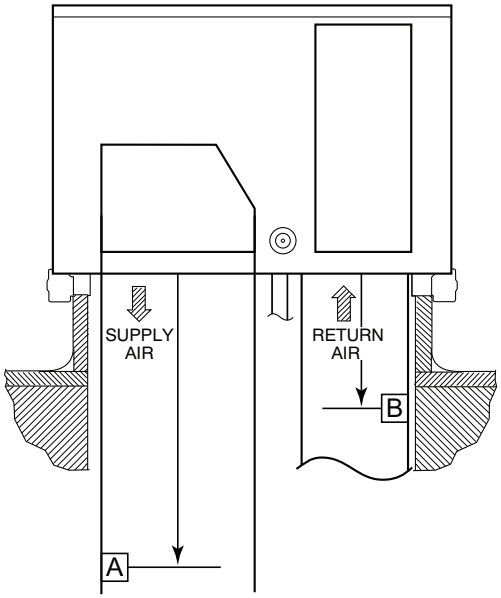

C12013

ARI PRESSURE LOCATIONS					
MODEL	SIZES	IN Supply Air [A]	IN Return Air [B]	MM Supply Air [A]	MM Return Air [B]
581J/551J	04–06	32	10	830	260
	07–12	43.5	12	1100	310
	14	64.5	14	1640	350
	17–28	83	19	2110	490
580J/558J	04–07	32	10	830	260
	08–14	43.5	12	1100	310
	16	64.5	14	1640	350
	17–30	83	19	2110	490
549J	04–06	32	10	1100	310
	07–09	43.5	12	1100	310
	12	44.5	13	1130	330
548J	04–07	32	10	830	260
	08–12	43.5	12	1100	310
	14	44.5	14	1130	350
	17–24	83	19	2110	490

Fig. 13 - Measuring External Static Pressure — Distance Below Unit Base

Service

⚠ CAUTION

EQUIPMENT DAMAGE HAZARD

Failure to follow this caution will result in equipment damage.

Do NOT exceed the recommended minimum Hz or CFM settings. Operating these units at a Hz setting below 40 Hz or at a CFM below the minimums listed in Tables 2 through 9 (see page 4) will result in damage to the unit.

Figs. 4 through 10 show the location of the VDF option in the various units covered by this document.

2-Speed Indoor Fan Motor System Components – The 2-Speed Indoor Fan Motor System factory option is comprised of three major components and related connecting harnesses:

1. Fan Speed Relay Board
2. Variable Frequency Drive
3. Indoor Fan Motor, designed for use with VFD

Fan Speed Relay Board – This board (PNO HK50ZA002) is designated as the VFD Fan Board on the unit wiring diagram labels. It is a small (3.0 x 3.12 in, 76 x 79 mm) printed circuit board with four SPDT control relays. See Fig. 14. There is no software on this board. The relay board is located in the unit's main control box; refer to unit label diagram for Component Location view.

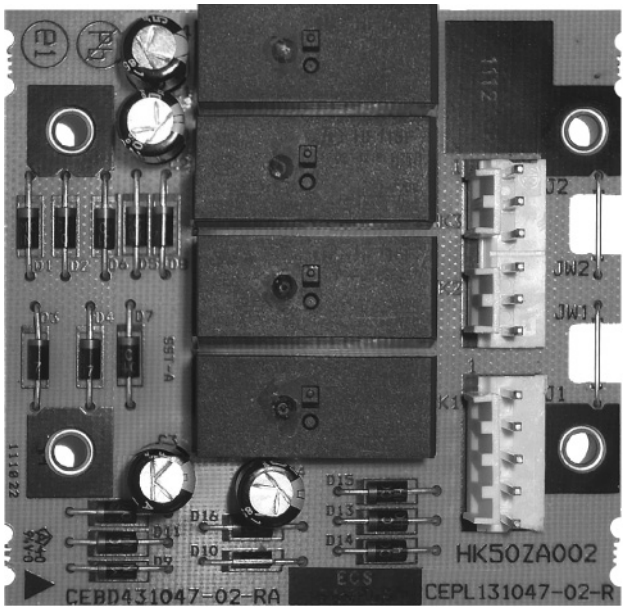

C150081

Fig. 14 - VFD Fan Board

The board is arranged in two separate circuits with individual pin connectors. Connector J1 is connected to the 24-vac input signal circuit with the four relay coils. Connector J2 is connected to the 24-VDC output circuit that connects to the VFD's terminal strip. See Fig. 11 for a simplified connection schematic for Fan Speed Relay board and the VFD.

In this VFD application, there are three inputs to the relay board, originating from the space thermostat's G, Y2 and W1 terminals. An input from terminal G (for continuous fan operation for ventilation or from a Y1 call) will result in the VFD starting the indoor fan motor and running the motor at LOW speed. An input from either Y2 or W1 will result in the VFD running the indoor fan motor at HIGH speed. See Table 10 for relay operation for each unit mode. Relay K4 is not used in this 2-speed application.

Table 10 – Two-Speed Configuration Logic (Thermostat Control)

INPUT	Relay Coil Status			Controlling Output	Fan Motor Speed
	K1	K2	K3		
G	Off	Off	On	K3	Low (40 Hz)
Y1	Off	Off	On	K3	Low (40 Hz)
Y2	Off	On	On	K2	High (60 Hz)
W1	On	On	On	K1	High (60 Hz)

Configuration Jumpers – The relay board has two configuration jumpers, marked JW1 and JW2. For this 2-speed motor application, both jumpers must be cut and open (see Fig. 15). Factory-installed boards will have these jumpers cut. Service replacement boards have these jumpers intact; servicer must cut both jumpers when installing a new service board. Failure to cut these jumpers will cause continuous fan motor operation.

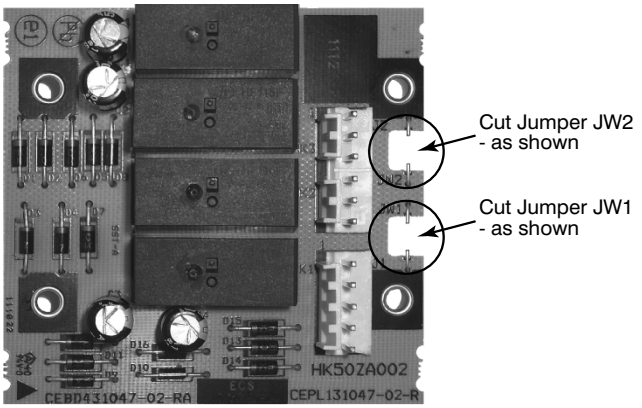

C150082

Fig. 15 - Jumpers JW1 & JW2 Cut for Two-Speed Fan Board Configuration

Variable Frequency Drive – The VFD is used to switch the indoor fan motor speed between full/high speed (60HZ motor operation) and reduced/low speed (40HZ motor operation) as required by ASHRAE 90.1 requirements for two-stage HVAC units. The VFD is factory-configured to match the current and power requirements for each motor selection and all wiring connections are completed by the factory; no field adjustments or connections are necessary.

While the basic VFD retains all of its standard capabilities, the VFD 2-speed application uses only a limited portion of these features to provide two discrete output speeds to the motor. Consequently the VFD is not equipped with a keypad. A keypad is available as an accessory (PNO CRDISKIT001A00) for field-installation or expanded service access to VFD parameter and

troubleshooting tables. Refer to Appendix for expanded discussion on VFD parameters and factory settings.

⚠ CAUTION

CONFIGURATION OVERRIDE HAZARD

DO NOT USE ABB OR CARRIER START-UP ASSISTANT ON THIS VFD APPLICAITON! Use of start-up assistant will override the factory VFD configurations!

The 2-Speed Indoor Fan control circuit inputs to the VFD are 24-VDC signals. This voltage is sourced from the VFD at its terminal 10 (+24 V). SAV speed inputs are received at terminals 14 (DI-2) for low speed (40HZ) motor operation and 15 (DI-3) for high speed (60HZ) motor operation. When neither input is present, the VFD will shut the fan motor off. There is no separate indoor fan contactor required in this application.

The VFD used in the 2-Speed Indoor Fan Motor system has soft start capabilities to slowly ramp up the speeds, eliminating any high inrush of air volume during speed changes. It also has internal over current protection for the fan motor.

Indoor Fan Motor – The indoor fan motors used with the VFD are specially manufactured for use with VFD power circuits. The motor winding insulation is specially formulated to resist breakdown due to voltage stress issues. The motor shaft includes grounding rings to prevent damage to bearings caused by grounding currents. Replace these motors with Factory Authorized Parts available from Replacement Components Division (RCD).

Table 11 – VFD Terminal Designations

TERMINAL	FUNCTION
U1 V1 W1	Three–Phase main circuit input power supply
U2 V2 W2	Three–Phase AC output to motor, 0V to maximum input voltage level
11 (GND) 12 (COMMON)	Factory–supplied jumper
10 (24VDC) 13 (DI–1)	Run (factory–supplied jumper)
10 (24VDC) 16 (DI–4)	Start Enable 1 (factory–supplied jumper). When opened, the drive goes to emergency stop
14 (DI–2) 15 (D1–3)	Factory wired for 24Vdc input from Fan Speed Board

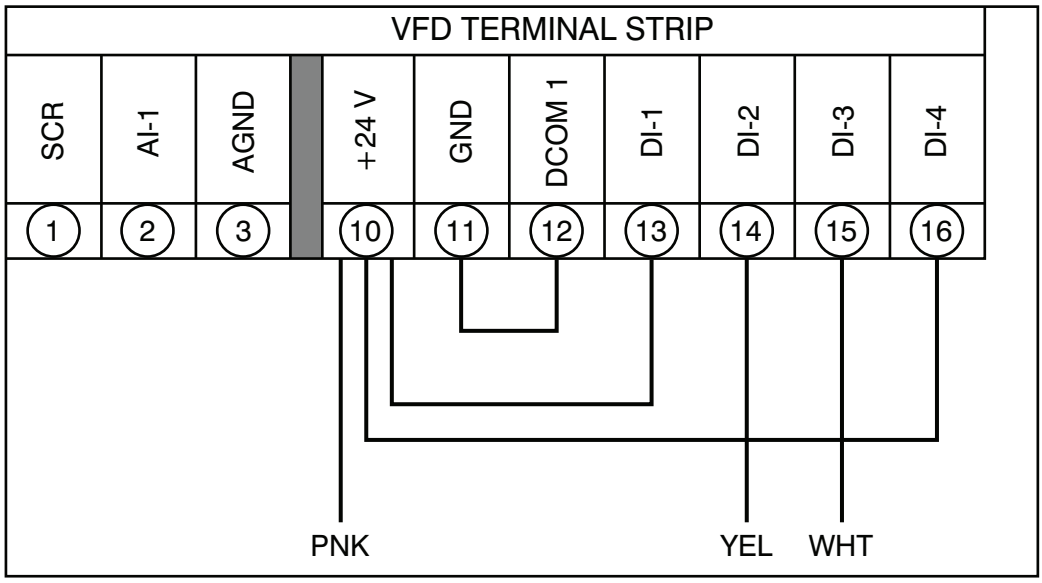

C13808

Fig. 16 - VFD Wiring

Central Terminal Board Jumpers — 581J/551J/549J/580J/558J/548J-Series only

The Central Terminal Board (CTB) is a large printed circuit board that is located in the unit control box. This printed circuit board contains multiple termination strips and connectors to simplify factory control box wiring and field control connections. Terminals are clearly marked on the board surface. See Fig 17 for Part Number HK50AA051.

The CTB contains no software and no logic. But it does include seven configuration jumpers that are cut to configure the board to read external optional and accessory controls, including that the unit is a heat pump.

Table 12 – CTB Jumpers

Jumper	Control Function	Note
JMP1	Phase Monitor	
JMP2	Occupancy Control	
JMP3	Smoke Detector Shutdown	
JMP4	Remote Shutdown	
JMP5	Heat Pump / Reheat	549J, 548J default: Cut
JMP6	Heat Pump / Reheat	549J, 548J default: Cut
JMP7	Heat Pump / Reheat	549J, 548J default: Cut

Jumpers JMP5, JMP6 and JMP7 are located in notches across the top of the CTB (see Fig. 17). These jumpers are intact on units with gas heat or electric heat. These jumpers are factory cut on all heat pump units and on units with Perfect Humidity (reheat) option.

Table 13 – Jumper Configuration

	Unit Type / Model		
Configuration Jumper	Gas Heat 581J, 580J*	Electric Heat 551J, 558J*	Heat Pump 549J, 548J
JMP5	Intact	Intact	Cut
JMP6	Intact	Intact	Cut
JMP7	Intact	Intact	Cut

*Unit without Perfect Humidity (Reheat)

Factory-installed boards will have these jumpers factory-cut where required. Service replacement boards have these jumpers intact; servicer must cut these jumpers as indicated in Table 13 when installing a replacement board.

VFD ALARMS AND FAULTS TROUBLESHOOTING –

The VFD has two LEDs on its front panel that indicate VFD operating status. These LEDs are GREEN and RED.

- GREEN LED ON STEADY: Power ON to VFD
- GREEN LED FLASHING: Alarm condition detected
- RED LED ON (Steady or Flashing): Fault condition detected

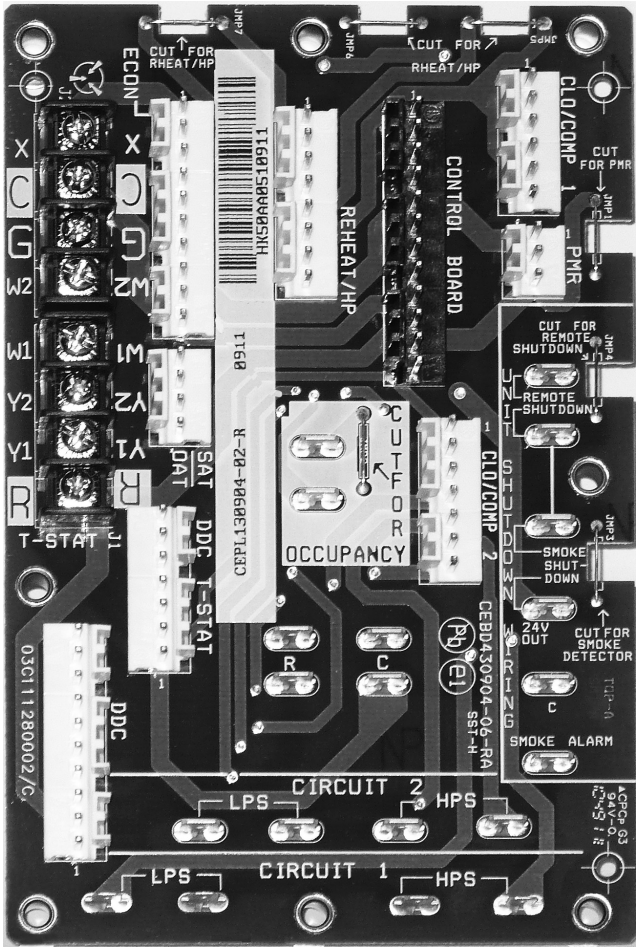

C11509

Fig. 17 - Central Terminal Board (CTB)

Alarms – Alarms are advisory in nature. These indicate a problem has been detected by the VFD's diagnostics but this problem will not require that the VFD and its motor be shut down. Typical fault condition on the 2-Speed Indoor Fan Motor application might be loose connections at the VFD terminal board or damaged conductors between the Fan Speed Board connector J2 and the VFD terminal strip. See Table 20 in the Appendix section for a full list.

Clear the Alarm LED: Shut off power to the VFD for five minutes. Restore power and recheck the GREEN LED. If this LED is still flashing, connect the accessory remote display-keypad kit and follow the troubleshooting instructions in the Appendix, page 26.

Faults – A fault is a significant internal situation for the VFD or its motor. If the motor was running when the fault was detected, it was shutdown. See Table 19 in the Appendix section for a full list of Faults, display codes and troubleshooting guides. Connect the accessory remote display-keypad kit and follow the troubleshooting instructions in the Appendix.

Clear the Fault LED: Shut off power to the VFD for five minutes. Restore power and recheck the RED LED.

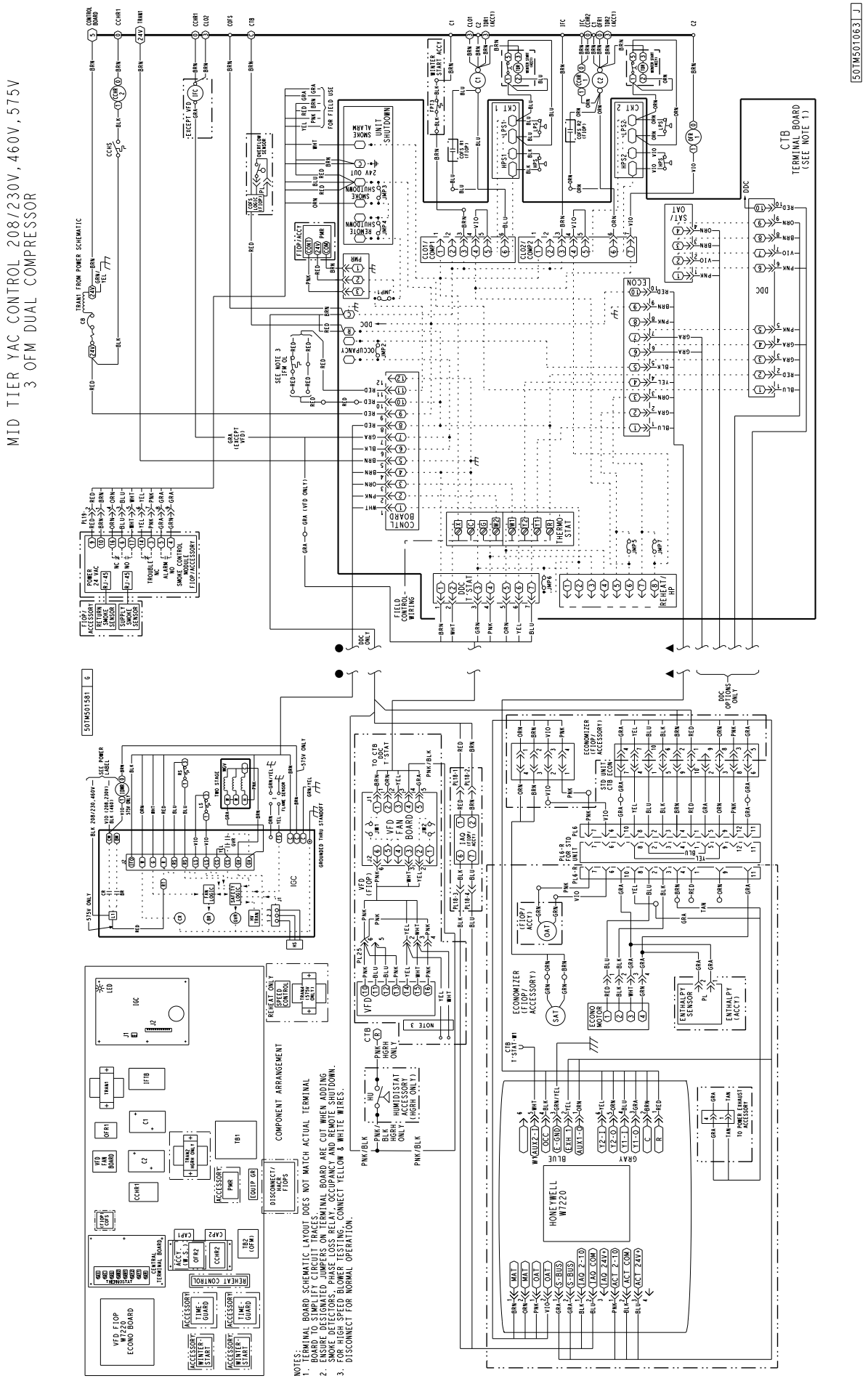

C14348

Fig. 18 - Typical Wiring Diagram - Single Package Rooftop Unit (581J*14 with VFD shown)

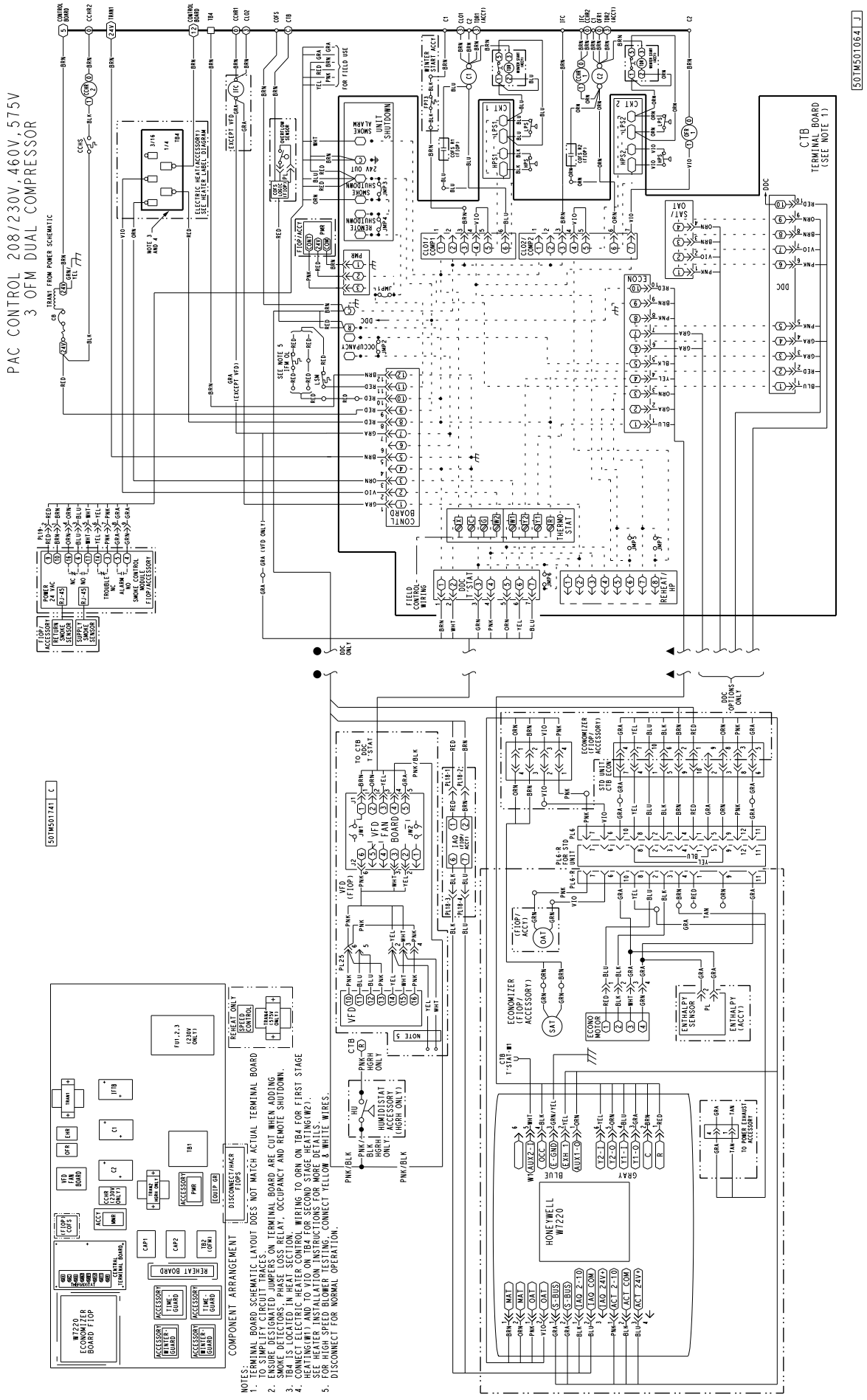

C14349

Fig. 19 - Typical Wiring Diagram - Single Package Rooftop Unit (551J*14 with VFD shown)

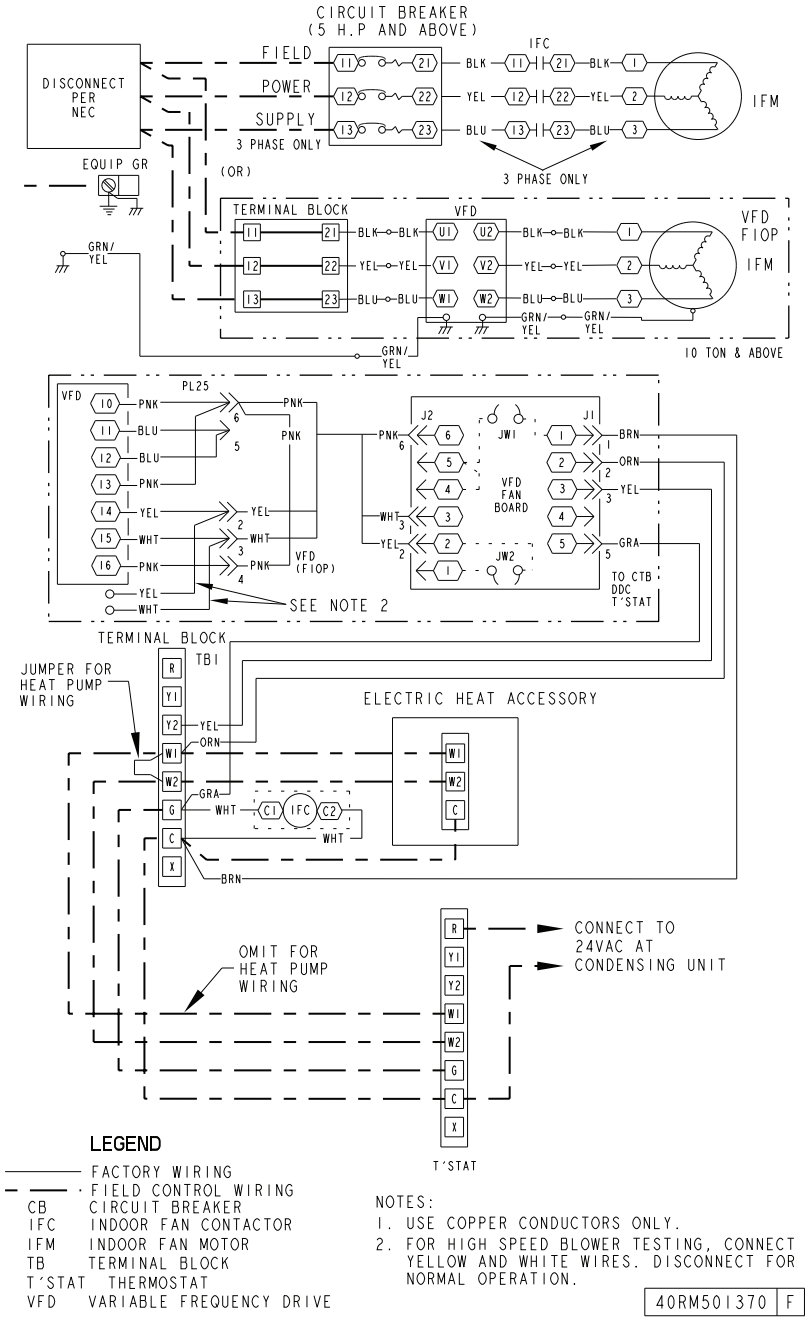

Fig. 20 - Typical Wiring Diagram - Split System Air-Handling Unit (524J with VFD shown)

VFD Maintenance

If installed in an appropriate environment, the VFD requires very little maintenance.

Table 14 lists the routine maintenance intervals recommended by Bryant.

Table 14 – MAINTENANCE INTERVALS

MAINTENANCE	INTERVAL
Heat sink temperature check and cleaning	Every 6 to 12 months (depending on the dustiness of the environment)
Main cooling fan replacement	Every five years
HVAC Control panel battery change	Every ten years

VFD Module Fan Replacement

The main cooling fan of the VFD has a life span of abut 60,000 operating hours at maximum rated operating temperature and drive load. The expected life span doubles for each 18°F drop in the fan temperature (fan temperature is a function of ambient temperatures and drive loads).

The VFD module fan cools the heat sink. Fan failure can be predicted by the increasing noise from fan bearings and the gradual rise in the heat sink temperature in spite of heat sink cleaning. If the drive is operated in a critical part of a process, fan replacement is recommended once these symptoms start appearing. Replacement fans are available from Bryant.

Use the following procedure to replace the VFD module cooling fan:

1. Turn off and lock out unit power.
2. Remove drive cover (see Fig. 24).
3. Press together the retaining clips on the fan cover and lift.
4. Disconnect the fan cable.
5. Install the new fan be reversing Steps 2 to 4.
6. Restore power.

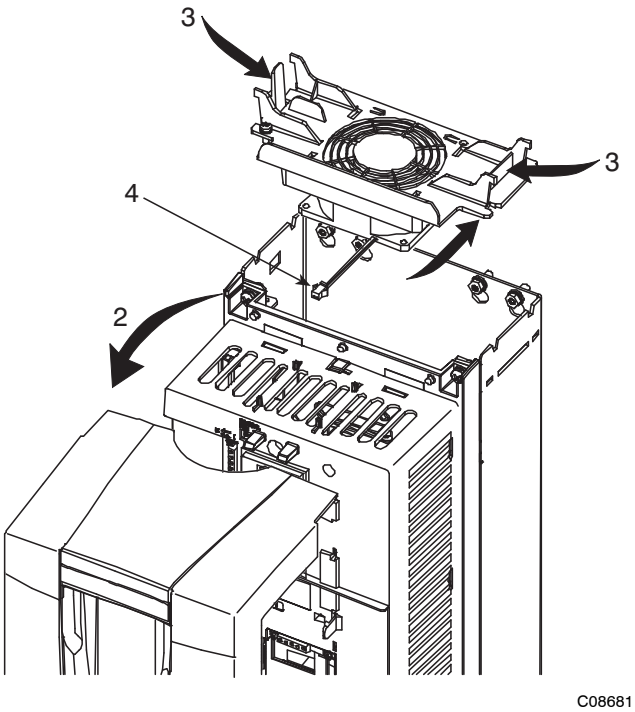

Fig. 21 - VFD Module Fan Replacement

Heat Sink Cleaning

The heat sink fins accumulate dust from the cooling air. In a normal environment check the heat sink annually, in a dusty environment check more often.

Use the following procedure to clean the heat sink:

1. Turn off and lock out unit power.
2. Remove the drive cover.
3. Press together the retaining clips on the fan cover and lift.
4. Blow clean compressed air (not humid) from bottom to top while simultaneously using a vacuum cleaner at the air outlet to trap the dust.
5. Replace the cooling fan.
6. Replace the drive cover
7. Restore power.

NOTE: This Appendix only applies when a unit with the factory-installed VFD option is equipped with the filed-installed Remote VFD Keypad (Part Number: CRDISKKIT001A00).

On single package rooftop units and fan coils equipped with the VFD option (see Table 1), the supply fan speed is controlled by a 3-phase VFD. See Figs. 4 through 10 for the location of the VFD in the units covered by this supplement.

The VFD is powered during normal operation to prevent condensation from forming on the boards during the off mode and is stopped by driving the speed to 0. The units use ABB VFDs. The interface wiring for the VFDs is shown in the Fig. 16. Terminal designations are shown in the Terminal Designation table (see Table 11 on page 13). Configurations are shown in the VFD Parameters tables (see Tables 15 through 18 on pages 20 through 23).

VFD Operation with Remote Keypad

The VFD keypad is shown in Fig. 22. The function of SOFT KEYS 1 and 2 change depending on what is displayed on the screen. The function of SOFT KEY 1 matches the word in the lower left-hand box on the display screen. The function of SOFT KEY 2 matches the word in the lower right-hand box on the display screen. If the box is empty, then the SOFT KEY does not have a function on that specific screen. The UP and DOWN keys are used to navigate through the menus. The OFF key is used to turn off the VFD. The AUTO key is used to change control of the drive to automatic control. The HAND key is used to change control of the drive to local (hand held) control. The HELP button is used to access the help screens.

For the VFD to operate on the units covered by this document, the drive must be set in AUTO mode. The word "AUTO" will appear in the upper left hand corner of the VFD display. Press the AUTO button to set the drive in AUTO mode.

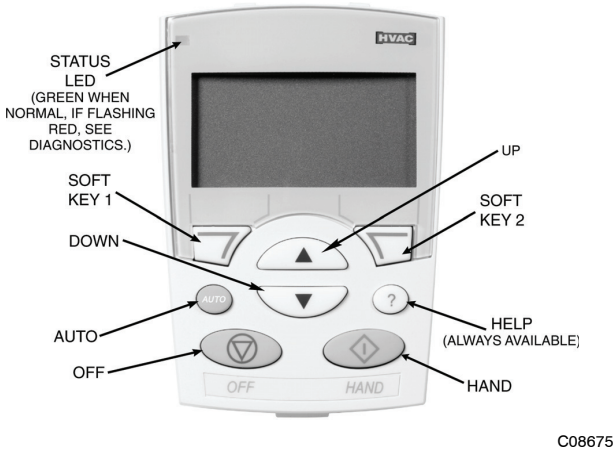

Fig. 22 - VFD Keypad

Start Up with Assistant

Initial start-up has been performed at the factory. Use of the start up assistant will override factory VFD configurations.

⚠ CAUTION

CONFIGURATION OVERRIDE HAZARD

DO NOT USE ABB OR CARRIER START-UP ASSISTANT ON THIS VFD APPLICAITON! Use of start-up assistant will override the factory VFD configurations!

Start Up by Changing Parameters Individually

Initial start-up is performed at the factory. To start up the VFD with by changing individual parameters, perform the following procedure:

1. Select MENU (SOFT KEY 2). The Main menu will be displayed.
2. Use the UP or DOWN keys to highlight PARAMETERS on the display screen and press ENTER (SOFT KEY 2).
3. Use the UP or DOWN keys to highlight the desired parameter group and press SEL (SOFT KEY 2).
4. Use the UP or DOWN keys to highlight the desired parameter and press EDIT (SOFT KEY 2).
5. Use the UP or DOWN keys to change the value of the parameter.
6. Press SAVE (SOFT KEY 2) to store the modified value. Press CANCEL (SOFT KEY 1) to keep the previous value. Any modifications that are not saved will not be changed.
7. Choose another parameter or press EXIT (SOFT KEY 1) to return to the listing of parameter groups. Continue until all the parameters have been configured and then press EXIT (SOFT KEY 1) to return to the main menu.

NOTE: The current parameter value appears above the highlight parameter. To view the default parameter value, press the UP and DOWN keys simultaneously. To restore the default factory settings, select the application macro "HVAC Default."

VFD Modes

The VFD has several different modes for configuring, operating, and diagnosing the VFD. The modes are:

1. Standard Display mode — shows drive status information and operates the drive
2. Parameters mode — edits parameter values individually
3. Start-up Assistant mode — guides the start up and configuration
4. Changed Parameters mode — shows all changed parameters
5. Drive Parameter Backup mode — stores or uploads the parameters
6. Clock Set mode — sets the time and date for the drive
7. I/O Settings mode — checks and edits the I/O settings

APPENDIX - REMOTE VFD KEYPAD REFERENCE (CONT)

Table 15 – VFD Parameters — 580J/558J*08-14, 548J*08-12, 581J/551J*08-12 and 549J*08-09

VFD Part Number	ABB Part Number	Description	Motor Part Number	Voltage (9905)	Nom Amps (9906)	Motor Nom Freq (9907)	Nom RPM (9908)	Nom HP (9909)	Const Speed Sel (1201)	Const Speed 1 (1202)	Const Speed 2 (1203)	Const Speed 3 (1204)	Relay Out 3 (1403)	Max Amps (2003)	Min Freq (2007)	Max Freq (2008)	Switch Freq (2606)	Start Fcn (2101)	Stop Fcn (2102)	Accel/ Decel (2201)	Accel (2202)	Decel (2203)
HK30WA364	ACH550–U0–012A–2	1.7 HP 230V	HD56FR233	230	5.8	60Hz	1725	1.7	DI 2,3	40Hz	60Hz	60Hz	16 FLT/ Alarm	6.7	0Hz	60Hz	4kHz	Auto	Ramp	Not Sel	30 sec	30 sec
HK30WA356	ACH550–U0–012A–2	1.7 HP 460V	HD56FR463	460	2.9	60Hz	1725	1.7	DI 2,3	40Hz	60Hz	60Hz	16 FLT/ Alarm	3.3	0Hz	60Hz	4kHz	Auto	Ramp	Not Sel	30 sec	30 sec
HK30WA366	ACH550–U0–017A–2	1.7 HP 575V	HD56FR579	575	3.1	60Hz	1725	1.7	DI 2,3	40Hz	60Hz	60Hz	16 FLT/ Alarm	3.6	0Hz	60Hz	4kHz	Auto	Ramp	Not Sel	30 sec	30 sec
HK30WA352	ACH550–U0–024A–2	2.4 HP 230V	HD56FE653	230	7.9	60Hz	1725	2.4	DI 2,3	40Hz	60Hz	60Hz	16 FLT/ Alarm	9.1	0Hz	60Hz	4kHz	Auto	Ramp	Not Sel	30 sec	30 sec
HK30WA356	ACH550–U0–06A9–4	2.4 HP 460V	HD56FE653	460	4	60Hz	1725	2.4	DI 2,3	40Hz	60Hz	60Hz	16 FLT/ Alarm	4.6	0Hz	60Hz	4kHz	Auto	Ramp	Not Sel	30 sec	30 sec
HK30WA360	ACH550–U0–06A9–4	2.4 HP 575V	HD56FE577	575	3.4	60Hz	1725	2.4	DI 2,3	40Hz	60Hz	60Hz	16 FLT/ Alarm	3.9	0Hz	60Hz	4kHz	Auto	Ramp	Not Sel	30 sec	30 sec
HK30WA352	ACH550–U0–06A9–4	2.9 HP 230V	HD58FE654	230	9.2	60Hz	1725	2.9	DI 2,3	40Hz	60Hz	60Hz	16 FLT/ Alarm	10.6	0Hz	60Hz	4kHz	Auto	Ramp	Not Sel	30 sec	30 sec
HK30WA356	ACH550–U0–08A8–4	2.9 HP 460V	HD58FE654	460	4.6	60Hz	1725	2.9	DI 2,3	40Hz	60Hz	60Hz	16 FLT/ Alarm	5.3	0Hz	60Hz	4kHz	Auto	Ramp	Not Sel	30 sec	30 sec
HK30WA353	ACH550–U0–012A–4	3.7 HP 230V	HD60FE656	230	11.2	60Hz	1725	3.7	DI 2,3	40Hz	60Hz	60Hz	16 FLT/ Alarm	12.9	0Hz	60Hz	4kHz	Auto	Ramp	Not Sel	30 sec	30 sec
HK30WA357	ACH550–U0–03A9–6	3.7 HP 460V	HD60FE656	460	5.6	60Hz	1725	3.7	DI 2,3	40Hz	60Hz	60Hz	16 FLT/ Alarm	6.4	0Hz	60Hz	4kHz	Auto	Ramp	Not Sel	30 sec	30 sec
HK30WA361	ACH550–U0–06A1–6	3.7 HP 575V	HD58FE577	575	4.2	60Hz	1725	3.7	DI 2,3	40Hz	60Hz	60Hz	16 FLT/ Alarm	4.8	0Hz	60Hz	4kHz	Auto	Ramp	Not Sel	30 sec	30 sec
HK30WA354	ACH550–U0–09A0–6	5.3 HP 230V	HD60FK658	230	13	60Hz	1740	5.3	DI 2,3	40Hz	60Hz	60Hz	16 FLT/ Alarm	150	0Hz	60Hz	4kHz	Auto	Ramp	Not Sel	30 sec	30 sec
HK30WA358	ACH550–U0–07A5–2	5.3 HP 460V	HD60FK658	460	6.4	60Hz	1740	5.3	DI 2,3	40Hz	60Hz	60Hz	16 FLT/ Alarm	7.4	0Hz	60Hz	4kHz	Auto	Ramp	Not Sel	30 sec	30 sec
HK30WA362	ACH550–U0–02A7–6	5.3 HP 575V	HD60FE576	575	5.4	60Hz	1725	5.3	DI 2,3	40Hz	60Hz	60Hz	16 FLT/ Alarm	6.2	0Hz	60Hz	4kHz	Auto	Ramp	Not Sel	30 sec	30 sec

APPENDIX - REMOTE VFD KEYPAD REFERENCE (CONT)

Table 16 – VFD Parameters — 580J/558J*16, 548J*14, 581J/551J*14 and 549J*12

VFD Part Number	ABB Part Number	Description	Motor Part Number	Voltage (9905)	Nom Amps (9906)	Motor Nom Freq (9907)	Nom RPM (9908)	Nom HP (9909)	Const Speed Sel (1201)	Const Speed 1 (1202)	Const Speed 2 (1203)	Const Speed 3 (1204)	Relay Out 3 (1403)	Max Amps (2003)	Min Freq (2007)	Max Freq (2008)	Switch Freq (2606)	Start Fcn (2101)	Stop Fcn (2102)	Accel/ Decel (2201)	Accel (2202)	Decel (2203)
HK30WA352	ACH550–U0–012A–2	2.4 HP 230V	HD56FE653	230	7.9	60Hz	1725	2.4	DI 2,3	40Hz	60Hz	60Hz	16 FLT/ Alarm	9.1	0Hz	60Hz	4kHz	Auto	Ramp	Not Sel	30 sec	30 sec
HK30WA356	ACH550–U0–012A–2	2.4 HP 460V	HD56FE653	460	4	60Hz	1725	2.4	DI 2,3	40Hz	60Hz	60Hz	16 FLT/ Alarm	4.6	0Hz	60Hz	4kHz	Auto	Ramp	Not Sel	30 sec	30 sec
HK30WA360	ACH550–U0–017A–2	2.4 HP 575V	HD56FE577	575	3.4	60Hz	1725	2.4	DI 2,3	40Hz	60Hz	60Hz	16 FLT/ Alarm	3.9	0Hz	60Hz	4kHz	Auto	Ramp	Not Sel	30 sec	30 sec
HK30WA352	ACH550–U0–024A–2	2.9 HP 230V	HD58FE654	230	9.2	60Hz	1725	2.9	DI 2,3	40Hz	60Hz	60Hz	16 FLT/ Alarm	10.6	0Hz	60Hz	4kHz	Auto	Ramp	Not Sel	30 sec	30 sec
HK30WA356	ACH550–U0–024A–2	2.9 HP 460V	HD58FE654	460	4.6	60Hz	1725	2.9	DI 2,3	40Hz	60Hz	60Hz	16 FLT/ Alarm	5.3	0Hz	60Hz	4kHz	Auto	Ramp	Not Sel	30 sec	30 sec
HK30WA353	ACH550–U0–06A9–4	3.7 HP 230V	HD60FE656	230	11.2	60Hz	1725	3.7	DI 2,3	40Hz	60Hz	60Hz	16 FLT/ Alarm	12.9	0Hz	60Hz	4kHz	Auto	Ramp	Not Sel	30 sec	30 sec
HK30WA357	ACH550–U0–06A9–4	3.7 HP 460V	HD60FE656	460	5.6	60Hz	1725	3.7	DI 2,3	40Hz	60Hz	60Hz	16 FLT/ Alarm	6.4	0Hz	60Hz	4kHz	Auto	Ramp	Not Sel	30 sec	30 sec
HK30WA361	ACH550–U0–08A8–4	3.7 HP 575V	HD58FE577	575	4.2	60Hz	1725	3.7	DI 2,3	40Hz	60Hz	60Hz	16 FLT/ Alarm	4.8	0Hz	60Hz	4kHz	Auto	Ramp	Not Sel	30 sec	30 sec
HK30WA354	ACH550–U0–012A–4	5.0 HP 230V	HD60FL657	230	16.7	60Hz	1745	5	DI 2,3	40Hz	60Hz	60Hz	16 FLT/ Alarm	19.2	0Hz	60Hz	4kHz	Auto	Ramp	Not Sel	30 sec	30 sec
HK30WA358	ACH550–U0–012A–4	5.0 HP 460V	HD60FL657	460	8.4	60Hz	1745	5	DI 2,3	40Hz	60Hz	60Hz	16 FLT/ Alarm	9.7	0Hz	60Hz	4kHz	Auto	Ramp	Not Sel	30 sec	30 sec
HK30WA362	ACH550–U0–03A9–6	5.0 HP 575V	HD60FL575	575	5.1	60Hz	1725	5	DI 2,3	40Hz	60Hz	60Hz	16 FLT/ Alarm	5.9	0Hz	60Hz	4kHz	Auto	Ramp	Not Sel	30 sec	30 sec
HK30WA354	ACH550–U0–06A1–6	5.0 HP 230V	HD60FK657	230	14.7	60Hz	1760	5	DI 2,3	40Hz	60Hz	60Hz	16 FLT/ Alarm	16.9	0Hz	60Hz	4kHz	Auto	Ramp	Not Sel	30 sec	30 sec
HK30WA358	ACH550–U0–09A0–6	5.0 HP 460V	HD60FK657	460	6.8	60Hz	1760	5	DI 2,3	40Hz	60Hz	60Hz	16 FLT/ Alarm	7.8	0Hz	60Hz	4kHz	Auto	Ramp	Not Sel	30 sec	30 sec
HK30WA362	ACH550–U0–09A0–6	5.0 HP 575V	HD60FL576	575	5.4	60Hz	1745	5	DI 2,3	40Hz	60Hz	60Hz	16 FLT/ Alarm	6.2	0Hz	60Hz	4kHz	Auto	Ramp	Not Sel	30 sec	30 sec

APPENDIX - REMOTE VFD KEYPAD REFERENCE (CONT)

Table 17 – VFD Parameters — 580J/558J*17-30, 548J*17-24 and 581J/551J*17-28

VFD Part Number	ABB Part Number	Description	Motor Part Number	Voltage (9905)	Nom Amps (9906)	Motor Nom Freq (9907)	Nom RPM (9908)	Nom HP (9909)	Const Speed Sel (1201)	Const Speed 1 (1202)	Const Speed 2 (1203)	Const Speed 3 (1204)	Relay Out 3 (1403)	Max Amps (2003)	Min Freq (2007)	Max Freq (2008)	Switch Freq (2606)	Start Fcn (2101)	Stop Fcn (2102)	Accel/ Decel (2201)	Accel (2202)	Decel (2203)
HK30WA352	ACH550–U0–012A–2	2.9 HP 230V	HD58FE654	230	9.2	60Hz	1725	2.9	DI 2,3	40Hz	60Hz	60Hz	16 FLT/ Alarm	10.6	0Hz	60Hz	4kHz	Auto	Ramp	Not Sel	30 sec	30 sec
HK30WA356	ACH550–U0–017A–2	2.9 HP 460V	HD58FE654	460	4.6	60Hz	1725	2.9	DI 2,3	40Hz	60Hz	60Hz	16 FLT/ Alarm	5.3	0Hz	60Hz	4kHz	Auto	Ramp	Not Sel	30 sec	30 sec
HK30WA353	ACH550–U0–024A–2	3.7 HP 230V	HD60FE656	230	11.2	60Hz	1725	3.7	DI 2,3	40Hz	60Hz	60Hz	16 FLT/ Alarm	12.9	0Hz	60Hz	4kHz	Auto	Ramp	Not Sel	30 sec	30 sec
HK30WA357	ACH550–U0–024A–2	3.7 HP 460V	HD60FE656	460	5.6	60Hz	1725	3.7	DI 2,3	40Hz	60Hz	60Hz	16 FLT/ Alarm	6.4	0Hz	60Hz	4kHz	Auto	Ramp	Not Sel	30 sec	30 sec
HK30WA361	ACH550–U0–024A–2	3.7 HP 575V	HD58FE577	575	4.2	60Hz	1725	3.7	DI 2,3	40Hz	60Hz	60Hz	16 FLT/ Alarm	4.8	0Hz	60Hz	4kHz	Auto	Ramp	Not Sel	30 sec	30 sec
HK30WA354	ACH550–U0–024A–2	5.0 HP 230V	HD60FK657	230	14.7	60Hz	1760	5	DI 2,3	40Hz	60Hz	60Hz	16 FLT/ Alarm	16.9	0Hz	60Hz	4kHz	Auto	Ramp	Not Sel	30 sec	30 sec
HK30WA358	ACH550–U0–024A–2	5.0 HP 460V	HD60FK657	460	6.8	60Hz	1760	5	DI 2,3	40Hz	60Hz	60Hz	16 FLT/ Alarm	7.8	0Hz	60Hz	4kHz	Auto	Ramp	Not Sel	30 sec	30 sec
HK30WA362	ACH550–U0–031A–2	5.0 HP 575V	HD60FL576	575	5.4	60Hz	1745	5	DI 2,3	40Hz	60Hz	60Hz	16 FLT/ Alarm	6.2	0Hz	60Hz	4kHz	Auto	Ramp	Not Sel	30 sec	30 sec
HK30WA354	ACH550–U0–031A–2	7.5 HP 230V	HD62FK654	230	23.5	60Hz	1760	7.5	DI 2,3	40Hz	60Hz	60Hz	16 FLT/ Alarm	27.0	0Hz	60Hz	4kHz	Auto	Ramp	Not Sel	30 sec	30 sec
HK30WA358	ACH550–U0–06A9–4	7.5 HP 460V	HD62FK654	460	11.9	60Hz	1760	7.5	DI 2,3	40Hz	60Hz	60Hz	16 FLT/ Alarm	13.7	0Hz	60Hz	4kHz	Auto	Ramp	Not Sel	30 sec	30 sec
HK30WA362	ACH550–U0–08A8–4	7.5 HP 575V	HD62FL576	575	9.0	60Hz	1750	7.5	DI 2,3	40Hz	60Hz	60Hz	16 FLT/ Alarm	10.4	0Hz	60Hz	4kHz	Auto	Ramp	Not Sel	30 sec	30 sec
HK30WA354	ACH550–U0–012A–4	5.0 HP 230V	HD60FL650	230	16.7	60Hz	1740	5	DI 2,3	40Hz	60Hz	60Hz	16 FLT/ Alarm	19.2	0Hz	60Hz	4kHz	Auto	Ramp	Not Sel	30 sec	30 sec
HK30WA358	ACH550–U0–012A–4	5.0 HP 460V	HD60FL650	460	8.4	60Hz	1740	5	DI 2,3	40Hz	60Hz	60Hz	16 FLT/ Alarm	9.7	0Hz	60Hz	4kHz	Auto	Ramp	Not Sel	30 sec	30 sec
HK30WA362	ACH550–U0–012A–4	5.0 HP 575V	HD60FL575	575	5.1	60Hz	1725	5	DI 2,3	40Hz	60Hz	60Hz	16 FLT/ Alarm	5.9	0Hz	60Hz	4kHz	Auto	Ramp	Not Sel	30 sec	30 sec
HK30WA354	ACH550–U0–012A–4	5.3 HP 230V	HD60FK658	230	13	60Hz	1740	5.3	DI 2,3	40Hz	60Hz	60Hz	16 FLT/ Alarm	150	0Hz	60Hz	4kHz	Auto	Ramp	Not Sel	30 sec	30 sec
HK30WA358	ACH550–U0–012A–4	5.3 HP 460V	HD60FK658	460	6.4	60Hz	1740	5.3	DI 2,3	40Hz	60Hz	60Hz	16 FLT/ Alarm	7.4	0Hz	60Hz	4kHz	Auto	Ramp	Not Sel	30 sec	30 sec
HK30WA362	ACH550–U0–015A–4	5.3 HP 575V	HD60FE576	575	5.4	60Hz	1725	5.3	DI 2,3	40Hz	60Hz	60Hz	16 FLT/ Alarm	6.2	0Hz	60Hz	4kHz	Auto	Ramp	Not Sel	30 sec	30 sec
HK30WA354	ACH550–U0–015A–4	7.5 HP 230V	HD62FL650	230	22.9	60Hz	1745	7.5	DI 2,3	40Hz	60Hz	60Hz	16 FLT/ Alarm	26.3	0Hz	60Hz	4kHz	Auto	Ramp	Not Sel	30 sec	30 sec
HK30WA358	ACH550–U0–06A1–6	7.5 HP 460V	HD62FL650	460	11.5	60Hz	1745	7.5	DI 2,3	40Hz	60Hz	60Hz	16 FLT/ Alarm	13.2	0Hz	60Hz	4kHz	Auto	Ramp	Not Sel	30 sec	30 sec
HK30WA362	ACH550–U0–09A0–6	7.5 HP 575V	HD62FL575	575	8.1	60Hz	1745	7.5	DI 2,3	40Hz	60Hz	60Hz	16 FLT/ Alarm	9.3	0Hz	60Hz	4kHz	Auto	Ramp	Not Sel	30 sec	30 sec
HK30WA355	ACH550–U0–09A0–6	10.0 HP 230V	HD64FK654	230	28	60Hz	1755	10	DI 2,3	40Hz	60Hz	60Hz	16 FLT/ Alarm	32.2	0Hz	60Hz	4kHz	Auto	Ramp	Not Sel	30 sec	30 sec
HK30WA359	ACH550–U0–09A0–6	10.0 HP 460V	HD64FK654	460	12.6	60Hz	1755	10	DI 2,3	40Hz	60Hz	60Hz	16 FLT/ Alarm	14.5	0Hz	60Hz	4kHz	Auto	Ramp	Not Sel	30 sec	30 sec
HK30WA363	ACH550–U0–09A0–6	10.0 HP 575V	HD64FL576	575	11.0	60Hz	1755	10	DI 2,3	40Hz	60Hz	60Hz	16 FLT/ Alarm	12.7	0Hz	60Hz	4kHz	Auto	Ramp	Not Sel	30 sec	30 sec
HK30WA355	ACH550–U0–09A0–6	10.0 HP 230V	HD64FL650	230	30.8	60Hz	1745	10	DI 2,3	40Hz	60Hz	60Hz	16 FLT/ Alarm	35.4	0Hz	60Hz	4kHz	Auto	Ramp	Not Sel	30 sec	30 sec
HK30WA359	ACH550–U0–011A–6	10.0 HP 460V	HD64FL650	460	15.4	60Hz	1745	10	DI 2,3	40Hz	60Hz	60Hz	16 FLT/ Alarm	17.7	0Hz	60Hz	4kHz	Auto	Ramp	Not Sel	30 sec	30 sec
HK30WA363	ACH550–U0–011A–6	10.0 HP 575V	HD64FL575	575	11	60Hz	1740	10	DI 2,3	40Hz	60Hz	60Hz	16 FLT/ Alarm	12.7	0Hz	60Hz	4kHz	Auto	Ramp	Not Sel	30 sec	30 sec

Table 18 – 524J***A/524J***H Unit VFD Parameters — 524J*07A-524J*28A and 524J*07H-524J*25H

VFD Part Number	ABB Part Number	Description	Motor Part Number	Voltage (9905)	Nom Amps (9906)	Motor Nom Freq (9907)	Nom RPM (9908)	Nom HP (9909)	Const Speed Sel (1201)	Const Speed 1 (1202)	Const Speed 2 (1203)	Const Speed 3 (1204)	Relay Out 3 (1403)	Max Amps (2003)	Min Freq (2007)	Max Freq (2008)	Switch Freq (2606)	Start Fcn (2101)	Stop Fcn (2102)	Accel/ Decel (2201)	Accel (2202)	Decel (2203)
HK30WA353	ACH550–U0–017A–2	2.4 HP 230V	HD56FE653	230	7.9	60Hz	1725	2.4	DI 2,3	40Hz	60Hz	60Hz	16 FLT/ Alarm	9.1	0Hz	60Hz	4kHz	Auto	Ramp	Not Sel	30 sec	30 sec
HK30WA357	ACH550–U0–08A8–4	2.4 HP 460V	HD56FE653	460	4	60Hz	1725	2.4	DI 2,3	40Hz	60Hz	60Hz	16 FLT/ Alarm	4.6	0Hz	60Hz	4kHz	Auto	Ramp	Not Sel	30 sec	30 sec
HK30WA361	ACH550–U0–06A1–6	2.4 HP 575V	HD56FE577	575	3.4	60Hz	1725	2.4	DI 2,3	40Hz	60Hz	60Hz	16 FLT/ Alarm	3.9	0Hz	60Hz	4kHz	Auto	Ramp	Not Sel	30 sec	30 sec
HK30WA353	ACH550–U0–017A–2	2.9 HP 230V	HD58FE654	230	9.2	60Hz	1725	2.9	DI 2,3	40Hz	60Hz	60Hz	16 FLT/ Alarm	10.6	0Hz	60Hz	4kHz	Auto	Ramp	Not Sel	30 sec	30 sec
HK30WA357	ACH550–U0–08A8–4	2.9 HP 460V	HD58FE654	460	4.6	60Hz	1725	2.9	DI 2,3	40Hz	60Hz	60Hz	16 FLT/ Alarm	5.3	0Hz	60Hz	4kHz	Auto	Ramp	Not Sel	30 sec	30 sec
HK30WA353	ACH550–U0–017A–2	3.7 HP 230V	HD60FE656	230	11.2	60Hz	1725	3.7	DI 2,3	40Hz	60Hz	60Hz	16 FLT/ Alarm	12.9	0Hz	60Hz	4kHz	Auto	Ramp	Not Sel	30 sec	30 sec
HK30WA357	ACH550–U0–08A8–4	3.7 HP 460V	HD60FE656	460	5.6	60Hz	1725	3.7	DI 2,3	40Hz	60Hz	60Hz	16 FLT/ Alarm	6.4	0Hz	60Hz	4kHz	Auto	Ramp	Not Sel	30 sec	30 sec
HK30WA361	ACH550–U0–06A1–6	3.7 HP 575V	HD58FE577	575	4.2	60Hz	1725	3.7	DI 2,3	40Hz	60Hz	60Hz	16 FLT/ Alarm	4.8	0Hz	60Hz	4kHz	Auto	Ramp	Not Sel	30 sec	30 sec
HK30WA354	ACH550–U0–024A–2	5.0 HP 230V	HD60FK653	230	15.3	60Hz	1745	5	DI 2,3	40Hz	60Hz	60Hz	16 FLT/ Alarm	17.6	0Hz	60Hz	4kHz	Auto	Ramp	Not Sel	30 sec	30 sec
HK30WA358	ACH550–U0–012A–4	5.0 HP 460V	HD60FK653	460	6.4	60Hz	1745	5	DI 2,3	40Hz	60Hz	60Hz	16 FLT/ Alarm	7.4	0Hz	60Hz	4kHz	Auto	Ramp	Not Sel	30 sec	30 sec
HK30WA362	ACH550–U0–09A0–6	5.0 HP 575V	HD60FK575	575	5.4	60Hz	1760	5	DI 2,3	40Hz	60Hz	60Hz	16 FLT/ Alarm	6.2	0Hz	60Hz	4kHz	Auto	Ramp	Not Sel	30 sec	30 sec
HK30WA354	ACH550–U0–024A–2	7.5 HP 230V	HD62FK652	230	22.4	60Hz	1760	7.5	DI 2,3	40Hz	60Hz	60Hz	16 FLT/ Alarm	25.8	0Hz	60Hz	4kHz	Auto	Ramp	Not Sel	30 sec	30 sec
HK30WA358	ACH550–U0–012A–4	7.5 HP 460V	HD62FK652	460	9.7	60Hz	1760	7.5	DI 2,3	40Hz	60Hz	60Hz	16 FLT/ Alarm	11.2	0Hz	60Hz	4kHz	Auto	Ramp	Not Sel	30 sec	30 sec
HK30WA362	ACH550–U0–09A0–6	7.5 HP 575V	HD62FK576	575	9.0	60Hz	1750	7.5	DI 2,3	40Hz	60Hz	60Hz	16 FLT/ Alarm	10.4	0Hz	60Hz	4kHz	Auto	Ramp	Not Sel	30 sec	30 sec
HK30WA355	ACH550–U0–031A–2	10.0 HP 230V	HD64FK654	230	30.8	60Hz	1760	10	DI 2,3	40Hz	60Hz	60Hz	16 FLT/ Alarm	35.4	0Hz	60Hz	4kHz	Auto	Ramp	Not Sel	30 sec	30 sec
HK30WA359	ACH550–U0–015A–4	10.0 HP 460V	HD64FK654	460	15.4	60Hz	1760	10	DI 2,3	40Hz	60Hz	60Hz	16 FLT/ Alarm	17.7	0Hz	60Hz	4kHz	Auto	Ramp	Not Sel	30 sec	30 sec
HK30WA363	ACH550–U0–011A–6	10.0 HP 575V	HD64FK575	575	11.0	60Hz	1755	10	DI 2,3	40Hz	60Hz	60Hz	16 FLT/ Alarm	12.7	0Hz	60Hz	4kHz	Auto	Ramp	Not Sel	30 sec	30 sec

Standard Display Mode

Use the standard display mode to read information on the drive status and operate the drive. To reach the standard display mode, press EXIT until the LCD display shows status information as described below. (See Fig. 23.)

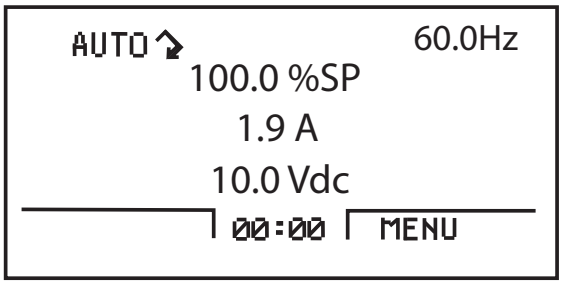

C09249

Fig. 23 - Standard Display Example

The top line of the LCD display shows the basic status information of the drive. The HAND icon indicates that the drive control is local from the control panel. The AUTO icon indicates that the drive is in remote control mode, such as the basic I/O or field bus.

The arrow icon indicates the drive and motor rotation status. A rotating arrow (clockwise or counterclockwise) indicates that the drive is running and at set point and the shaft direction is forward or reverse. A rotating blinking arrow indicates that the drive is running but not at set point. A stationary arrow indicates that the drive is stopped. For the units covered in this manual, the correct display rotation is clockwise.

The upper right corner shows the frequency set point that the drive will maintain.

Using parameter group 34, the middle of the LCD display can be configured to display 3 parameter values. The default display shows parameters 0103 (OUTPUT FREQ) in percent speed, 0104 (CURRENT) in amperes, and 0120 (Al1) in voltage DC.

The bottom corners of the LCD display show the functions currently assigned to the two soft keys. The lower middle displays the current time (if configured to show the time).

The first time the drive is powered up, it is in the OFF mode. To switch to local hand-held control and control the drive using the control panel, press and hold the HAND button. Pressing the HAND button switches the drive to hand control while keeping the drive running. Press the AUTO button to switch to remote input control. To start the drive press the HAND or AUTO buttons, to stop the drive press the OFF button.

To adjust the speed in HAND mode, press the UP or DOWN buttons (the reference changes immediately). The reference can be modified in the local control (HAND) mode, and can be parameterized (using Group 11 reference select) to also allow modification in the remote control mode.

Parameters Mode

The Parameters mode is used to change the parameters on the drive. To change parameters, perform the following procedure:

1. Select MENU (SOFT KEY 2). The Main menu will be displayed.
2. Use the UP or DOWN keys to highlight PARAMETERS on the display screen and press ENTER (SOFT KEY 2).
3. Use the UP or DOWN keys to highlight the desired parameter group and press SEL (SOFT KEY 2).
4. Use the UP or DOWN keys to highlight the desired parameter and press EDIT (SOFT KEY 2).
5. Use the UP or DOWN keys to change the value of the parameter.
6. Press SAVE (SOFT KEY 2) to store the modified value. Press CANCEL (SOFT KEY 1) to keep the previous value. Any modifications that are not saved will not be changed.
7. Choose another parameter or press EXIT (SOFT KEY 1) to return to the listing of parameter groups. Continue until all the parameters have been configured and then press EXIT (SOFT KEY 1) to return to the main menu.

NOTE: The current parameter value appears above the highlight parameter. To view the default parameter value, press the UP and DOWN keys simultaneously. To restore the default factory settings, select the Bryant application macro.

Changed Parameters Mode

The Changed Parameters mode is used to view and edit recently changed parameters on the drive. To view the changed parameters, perform the following procedure:

1. Select MENU (SOFT KEY 2). The Main menu will be displayed.
2. Use the UP or DOWN keys to highlight CHANGED PAR on the display screen and press ENTER (SOFT KEY 2). A list of the recently changed parameters will be displayed.
3. Use the UP or DOWN keys to highlight the desired parameter group and press EDIT (SOFT KEY 2) to change the parameter if desired.
4. Press EXIT (SOFT KEY 1) to exit the Changed Parameters mode.

Drive Parameter Backup Mode

The drive parameter back up mode is used to export the parameters from one drive to another. The parameters can be uploaded from a VFD to the removable control panel. The control panel can then be transferred to another drive and the parameters downloaded into memory.

Depending on the motor and application, there are two options available. The first option is to download all parameters. This copies both application and motor parameters to the drive from the control panel. This is recommended when using the same application for drives of the same size. This can also be used to create a backup of the parameters group for the drive.

The second option downloads only the application parameters to the drive. This is recommended when using the same application for drives of different sizes. Parameters 9905, 9906, 9907, 9908, 9909, 1605, 1607, 5201, and group 51 parameters and internal motor parameters are not copied.

Upload All Parameters

To upload and store parameters in the control panel from the VFD, perform the following procedure:

1. Select MENU (SOFT KEY 2). The Main menu will be displayed.
2. Use the UP or DOWN keys to highlight PAR BACKUP on the display screen and press ENTER (SOFT KEY 2).
3. Use the UP or DOWN keys to highlight UPLOAD TO PANEL and press SEL (SOFT KEY 2).
4. The text “Copying Parameters” will be displayed with a progress indicator. To stop the process, select ABORT (SOFT KEY 1).
5. When the upload is complete, the text “Parameter upload successful” will be displayed.
6. The display will then return to the PAR BACKUP menu. Select EXIT (SOFT KEY 1) to return to the main menu.
7. The control panel can now be disconnected from the drive.

Download All Parameters

To download all parameters from the control panel to the VFD, perform the following procedure:

1. Install the control panel with the correct parameters onto the VFD.
2. Select MENU (SOFT KEY 2). The Main menu will be displayed.
3. Use the UP or DOWN keys to highlight PAR BACKUP on the display screen and press ENTER (SOFT KEY 2).
4. Use the UP or DOWN keys to highlight DOWNLOAD TO DRIVE ALL and press SEL (SOFT KEY 2).
5. The text “Restoring Parameters” will be displayed with a progress indicator. To stop the process, select ABORT (SOFT KEY 1).
6. When the download is complete, the text “Parameter download successful” will be displayed.
7. The display will then return to the PAR BACKUP menu. Select EXIT (SOFT KEY 1) to return to the main menu.
8. The control panel can now be disconnected from the drive.

Download Application Parameters

To download application parameters only to the control panel from the VFD, perform the following procedure:

1. Install the control panel with the correct parameters onto the VFD.
2. Select MENU (SOFT KEY 2). The Main menu will be displayed.
3. Use the UP or DOWN keys to highlight PAR BACKUP on the display screen and press ENTER (SOFT KEY 2).
4. Use the UP or DOWN keys to highlight DOWNLOAD APPLICATION and press SEL (SOFT KEY 2).
5. The text “Downloading Parameters (partial)” will be displayed with a progress indicator. To stop the process, select ABORT (SOFT KEY 1).
6. When the download is complete, the text “Parameter download successful” will be displayed.
7. The display will then return to the PAR BACKUP menu. Select EXIT (SOFT KEY 1) to return to the main menu.
8. The control panel can now be disconnected from the drive.

Clock Set Mode

The clock set mode is used for setting the date and time for the internal clock of the VFD. In order to use the timer functions of the VFD control, the internal clock must be set. The date is used to determine weekdays and is visible in the fault logs.

To set the clock, perform the following procedure:

1. Select MENU (SOFT KEY 2). The Main menu will be displayed.
2. Use the UP or DOWN keys to highlight CLOCK SET on the display screen and press ENTER (SOFT KEY 2). The clock set parameter list will be displayed.
3. Use the UP or DOWN keys to highlight CLOCK VISIBILITY and press SEL (SOFT KEY 2). This parameter is used to display or hide the clock on the screen. Use the UP or DOWN keys to change the parameter setting. Press OK (SOFT KEY 2) to save the configuration and return to the Clock Set menu.
4. Use the UP or DOWN keys to highlight SET TIME and press SEL (SOFT KEY 2). Use the UP or DOWN keys to change the hours and minutes. Press OK (SOFT KEY 2) to save the configuration and return to the Clock Set menu.
5. Use the UP or DOWN keys to highlight TIME FORMAT and press SEL (SOFT KEY 2). Use the UP or DOWN keys to change the parameter setting. Press OK (SOFT KEY 2) to save the configuration and return to the Clock Set menu.
6. Use the UP or DOWN keys to highlight SET DATE and press SEL (SOFT KEY 2). Use the UP or DOWN keys to change the day, month, and year. Press OK (SOFT KEY 2) to save the configuration and return to the Clock Set menu.
7. Use the UP or DOWN keys to highlight DATE FORMAT and press SEL (SOFT KEY 2). Use the UP or DOWN keys to change the parameter setting. Press OK (SOFT KEY 2) to save the configuration and return to the Clock Set menu.
8. Press EXIT (SOFT KEY 1) twice to return to the main menu.

I/O Settings Mode

The I/O Settings mode is used for viewing and editing the I/O settings.

To configure the I/O settings, perform the following procedure:

1. Select MENU (SOFT KEY 2). The Main menu will be displayed.
2. Use the UP or DOWN keys to highlight I/O SETTINGS on the display screen and press ENTER (SOFT KEY 2). The I/O Settings parameter list will be displayed.
3. Use the UP or DOWN keys to highlight the desired I/O setting and press SEL (SOFT KEY 2).
4. Use the UP or DOWN keys to select the parameter to view. Press OK (SOFT KEY 2).
5. Use the UP or DOWN keys to change the parameter setting. Press SAVE (SOFT KEY 2) to save the configuration. Press CANCEL (SOFT KEY 1) to keep the previous value. Any modifications that are not saved will not be changed.
6. Press EXIT (SOFT KEY 1) twice to return to the main menu.

VFD Diagnostics

The drive detects error situations and reports them using:

1. Green and red LEDs on the body of the drive (located under the keypad)
2. Status LED on the control panel
3. Control panel display
4. The Fault Word and Alarm Word parameter bits (parameters 0305 to 0309)

The form of the display depends on the severity of the error. The user can specify the severity for many errors by directing the drive to ignore the error situation, report the situation as an alarm, or report the situation as a fault.

Faults (Red LED Lit)

The VFD signals that it has detected a severe error, or fault, by:

1. Enabling the red LED on the drive (LED is either steady or flashing)
2. Setting an appropriate bit in a Fault Word parameter (0305 to 0307)
3. Overriding the control panel display with the display of a fault code
4. Stopping the motor (if it was on)
5. Sets an appropriate bit in Fault Word parameter 0305- 0307.

The fault code on the control panel display is temporary. Pressing the MENU, ENTER, UP button or DOWN buttons removes the fault message. The message reappears after a few seconds if the control panel is not touched and the fault is still active.

Alarms (Green LED Flashing)

For less severe errors, called alarms, the diagnostic display is advisory. For these situations, the drive is simply reporting that it had detected something unusual. In these situations, the drive:

1. Flashes the green LED on the drive (does not apply to alarms that arise from control panel operation errors)
2. Sets an appropriate bit in an Alarm Word parameter (0308 or 0309)
3. Overrides the control panel display with the display of an alarm code and/or name

Alarm messages disappear from the control panel display after a few seconds. The message returns periodically as long as the alarm condition exists.

Correcting Faults

The recommended corrective action for faults is shown in the Fault Listing Table 19. The VFD can also be reset to remove the fault. If an external source for a start command is selected and is active, the VFD may start immediately after fault reset.

To reset a fault indicated by a flashing red LED, turn off the power for 5 minutes. To reset a fault indicated by a red LED (not flashing), press RESET from the control panel or turn off the power for 5 minutes. Depending on the value of parameter 1604 (FAULT RESET SELECT), digital input or serial communication could also be used to reset the drive. When the fault has been corrected, the motor can be started.

History

For reference, the last three fault codes are stored into parameters 0401, 0412, 0413. For the most recent fault (identified by parameter 0401), the drive stores additional data (in parameters 0402 through 0411) to aid in troubleshooting a problem. For example, a parameter 0404 stores the motor speed at the time of the fault. To clear the fault history (all of Group 04, Fault History parameters), follow these steps:

1. In the control panel, Parameters mode, select parameter 0401.
2. Press EDIT.
3. Press the UP and DOWN buttons simultaneously.
4. Press SAVE.

Correcting Alarms

To correct alarms, first determine if the Alarm requires any corrective action (action is not always required). Use Table 20 to find and address the root cause of the problem.

If diagnostics troubleshooting has determined that the drive is defective during the warranty period, contact ABB Automation Inc., at 1-800-435-7365, option 4, option 3. A qualified technician will review the problem with the caller and make a determination regarding how to proceed. This may involve dispatching a designated service station (DSS) representative from an authorized station, dispatching a replacement unit, or advising return for repair.

Control Panel Cleaning

Use a soft damp cloth to clean the control panel. Avoid harsh cleaners which could scratch the display window.

Battery Replacement

A battery is only used in assistant control panels that have the clock function available and enabled. The battery keeps the clock operating in memory during power interruptions. The expected life for the battery is greater than ten years. To remove the battery, use a coin to rotate the battery holder on the back of the control panel. Replace the battery with type CR2032.

Table 19 – FAULT CODES

FAULT CODE	FAULT NAME IN PANEL	DESCRIPTION AND RECOMMENDED CORRECTIVE ACTION
1	OVERCURRENT	Output current is excessive. Check for excessive motor load, insufficient acceleration time (parameters 2202 ACCELER TIME 1, default 30 seconds), or faulty motor, motor cables or connections.
2	DC OVERVOLT	Intermediate circuit DC voltage is excessive. Check for static or transient over voltages in the input power supply, insufficient deceleration time (parameters 2203 DECELER TIME 1, default 30 seconds), or undersized brake chopper (if present).
3	DEV OVERTEMP	Drive heat sink is overheated. Temperature is at or above 115°C (239°F). Check for fan failure, obstructions in the air flow, dirt or dust coating on the heat sink, excessive ambient temperature, or excessive motor load.
4	SHORT CIRC	Fault current. Check for short−circuit in the motor cable(s) or motor or supply disturbances.
5	OVERLOAD	Inverter overload condition. The drive output current exceeds the ratings.
6	DC OVERVOLT	Intermediate circuit DC voltage is not sufficient. Check for missing phase in the input power supply, blown fuse, or under voltage on main circuit.
7	AI1 LOSS	Analog input 1 loss. Analog input value is less than AI1 FLT LIMIT (3021). Check source and connection for analog input and parameter settings for AI1 FLT LIMIT (3021) and 3001 AI<MIN FUNCTION.
8	AI2 LOSS	Analog input 2 loss. Analog input value is less than AI2 FLT LIMIT (3022). Check source and connection for analog input and parameter settings for AI2 FLT LIMIT (3022) and 3001 AI<MIN FUNCTION.
9	MOT OVERTEMP	Motor is too hot, as estimated by the drive. Check for overloaded motor. Adjust the parameters used for the estimate (3005 through 3009). Check the temperature sensors and Group 35 parameters.
10	PANEL LOSS	Panel communication is lost and either drive is in local control mode (the control panel displays LOC), or drive is in remote control mode (REM) and is parameterized to accept start/stop, direction or reference from the control panel. To correct check the communication lines and connections. Check parameter 3002 PANEL COMM ERROR, parameters in Group 10: Command Inputs and Group 11:Reference Select (if drive operation is REM).
11	ID RUN FAIL	The motor ID run was not completed successfully. Check motor connections.
12	MOTOR STALL	Motor or process stall. Motor is operating in the stall region. Check for excessive load or insufficient motor power. Check parameters 3010 through 3012.
13	RESERVED	Not used.
14	EXT FAULT 1	Digital input defined to report first external fault is active. See parameter 3003 EXTERNAL FAULT 1.
15	EXT FAULT 2	Digital input defined to report second external fault is active. See parameter 3004 EXTERNAL FAULT 2.
16	EARTH FAULT	The load on the input power system is out of balance. Check for faults in the motor or motor cable. Verify that motor cable does not exceed maximum specified length.
17	UNDERLOAD	Motor load is lower than expected. Check for disconnected load. Check parameters 3013 UNDERLOAD FUNCTION through 3015 UNDERLOAD CURVE.
18	THERM FAIL	Internal fault. The thermistor measuring the internal temperature of the drive is open or shorted. Contact Bryant.
19	OPEX LINK	Internal fault. A communication−related problem has been detected between the OMIO and OINT boards. Contact Bryant.
20	OPEX PWR	Internal fault. Low voltage condition detected on the OINT board. Contact Bryant.
21	CURR MEAS	Internal fault. Current measurement is out of range. Contact Bryant.
22	SUPPLY PHASE	Ripple voltage in the DC link is too high. Check for missing main phase or blown fuse.
23	RESERVED	Not used.
24	OVERSPEED	Motor speed is greater than 120% of the larger (in magnitude) of 2001 MINIMUM SPEED or 2002 MAXIMUM SPEED parameters. Check parameter settings for 2001 and 2002. Check adequacy of motor braking torque. Check applicability of torque control. Check brake chopper and resistor.
25	RESERVED	Not used.
26	DRIVE ID	Internal fault. Configuration block drive ID is not valid.
27	CONFIG FILE	Internal configuration file has an error. Contact Bryant.
28	SERIAL 1 ERR	Field bus communication has timed out. Check fault setup (3018 COMM FAULT FUNC and 3019 COMM FAULT TIME). Check communication settings (Group 51 or 53 as appropriate). Check for poor connections and/or noise on line.
29	EFB CON FILE	Error in reading the configuration file for the field bus adapter.
30	FORCE TRIP	Fault trip forced by the field bus. See the field bus reference literature.
31	EFB 1	Fault code reserved for the EFB protocol application. The meaning is protocol dependent.
32	EFB 2	Fault code reserved for the EFB protocol application. The meaning is protocol dependent.
33	EFB 3	Fault code reserved for the EFB protocol application. The meaning is protocol dependent.
34	MOTOR PHASE	Fault in the motor circuit. One of the motor phases is lost. Check for motor fault, motor cable fault, thermal relay fault, or internal fault.
35	OUTP WIRING	Error in power wiring suspected. Check that input power wired to drive output. Check for ground faults.
101 – 105	SYSTEM ERROR	Error internal to the drive. Contact Bryant and report the error number.

Table 19 — FAULT CODES (cont)

FAULT CODE	FAULT NAME IN PANEL	DESCRIPTION AND RECOMMENDED CORRECTIVE ACTION
201 – 206	SYSTEM ERROR	Error internal to the drive. Contact Bryant and report the error number.
1000	PAR HZRPM	Parameter values are inconsistent. Check for any of the following: 2001 MINIMUM SPEED > 2002 MAXIMUM SPEED 2007 MINIMUM FREQ > 2008 MAXIMUM FREQ 2001 MINIMUM SPEED / 9908 MOTOR NOM SPEED is outside of the range: –128/+128 2002 MAXIMUM SPEED / 9908 MOTOR NOM SPEED is outside of the range: –128/+128 2007 MINIMUM FREQ / 9907 MOTOR NOM FREQ is outside of the range: – 128/+128 2008 MAXIMUM FREQ / 9907 MOTOR NOM FREQ is outside of the range: – 128/+128
1001	PAR PFA REFNG	Parameter values are inconsistent. Check that 2007 MINIMUM FREQ is negative, when 8123 PFA ENABLE is active.
1002	PAR PFA IOCNF	Parameter values are inconsistent. The number of programmed PFA relays does not match with Interlock configuration, when 8123 PFA ENABLE is active. Check consistency of RELAY OUTPUT parameters 1401 through 1403, and 1410 through 1412. Check 8117 NR OF AUX MOTORS, 8118 AUTOCHANGE INTERV, and 8120 INTERLOCKS.
1003	PAR AI SCALE	Parameter values are inconsistent. Check that parameter 1301 AI 1 MIN > 1302 AI 1 MAX and that parameter 1304 AI 2 MIN > 1305 AI 2 MAX.
1004	PAR AO SCALE	Parameter values are inconsistent. Check that parameter 1504 AO 1 MIN > 1505 AO 1 MAX and that parameter 1510 AO 2 MIN > 1511 AO 2 MAX.
1005	PAR PCU 2	Parameter values for power control are inconsistent: Improper motor nominal kVA or motor nominal power. Check the following parameters: 1.1 < (9906 MOTOR NOM CURR * 9905 MOTOR NOM VOLT * 1.73 / PN) < 2.6 Where: PN = 1000 * 9909 MOTOR NOM POWER (if units are kW) or PN = 746 * 9909 MOTOR NOM POWER (if units are HP, e.g., in US)
1006	PAR EXT RO	Parameter values are inconsistent. Check the extension relay module for connection and 1410 through 1412 RELAY OUTPUTS 4 through 6 have non–zero values.
1007	PAR FBUS	Parameter values are inconsistent. Check that a parameter is set for field bus control (e.g., 1001 EXT1 COMMANDS = 10 (COMM)), but 9802 COMM PROT SEL = 0.
1008	PAR PFA MODE	Parameter values are inconsistent. The 9904 MOTOR CTRL MODE must = 3 (SCALAR SPEED) when 8123 PFA ENABLE activated.
1009	PAR PCU 1	Parameter values for power control are inconsistent or improper motor nominal frequency or speed. Check for both of the following: 1 < (60 * 9907 MOTOR NOM FREQ / 9908 MOTOR NOM SPEED < 16 0.8 < 9908 MOTOR NOM SPEED / (120 * 9907 MOTOR NOM FREQ / Motor poles) < 0.992
1010	OVERRIDE/PFA CONFLICT	Override mode is enabled and PFA is activated at the same time. This cannot be done because PFA interlocks cannot be observed in the override mode.

Table 20 – ALARM CODES

ALARM CODE	ALARM NAME IN PANEL	DESCRIPTION AND RECOMMENDED CORRECTIVE ACTION
2001	–	Reserved
2002	–	Reserved
2003	–	Reserved
2004	DIR LOCK	The change in direction being attempted is not allowed. Do not attempt to change the direction of motor rotation, or Change parameter 1003 DIRECTION to allow direction change (if reverse operation is safe).
2005	I/O COMM	Field bus communication has timed out. Check fault setup (3018 COMM FAULT FUNC and 3019 COMM FAULT TIME). Check communication settings (Group 51 or 53 as appropriate). Check for poor connections and/or noise on line.
2006	AI1 LOSS	Analog input 1 is lost, or value is less than the minimum setting. Check input source and connections. Check the parameter that sets the minimum (3021) and the parameter that sets the Alarm/Fault operation (3001).
2007	AI2 LOSS	Analog input 2 is lost, or value is less than the minimum setting. Check input source and connections. Check parameter that sets the minimum (3022) and the parameter that sets the Alarm/Fault operation (3001).
2008	PANEL LOSS	Panel communication is lost and either the VFD is in local control mode (the control panel displays HAND), or the VFD is in remote control mode (AUTO) and is parameterized to accept start/stop, direction or reference from the control panel. To correct, check the communication lines and connections, Parameter 3002 PANEL LOSS, and parameters in groups 10 COMMAND INPUTS and 11 REFERENCE SELECT (if drive operation is REM).
2009	–	Reserved
2010	MOT OVERTEMP	Motor is hot, based on either the VFD estimate or on temperature feedback. This alarm warns that a Motor Overload fault trip may be near. Check for overloaded motor. Adjust the parameters used for the estimate (3005 through 3009). Check the temperature sensors and Group 35 parameters.
2011	UNDERLOAD	Motor load is lower than expected. This alarm warns that a Motor Underload fault trip may be near. Check that the motor and drive ratings match (motor is NOT undersized for the drive). Check the settings on parameters 3013 to 3015.
2012	MOTOR STALL	Motor is operating in the stall region. This alarm warns that a Motor Stall fault trip may be near.
2013*	AUTORESET	This alarm warns that the drive is about to perform an automatic fault reset, which may start the motor. To control automatic reset, use parameter group 31 (AUTOMATIC RESET).
2014	AUTOCHANGE	This alarm warns that the PFA autochange function is active. To control PFA, use parameter group 81 (PFA) and the Pump Alternation macro.
2015	PFA INTERLOCK	This alarm warns that the PFA interlocks are active, which means that the drive cannot start any motor (when Autochange is used), or a speed regulated motor (when Autochange is not used).
2016	–	Reserved
2017*	OFF BUTTON	This alarm indicates that the OFF button has been pressed.
2018	PID SLEEP	This alarm warns that the PID sleep function is active, which means that the motor could accelerate when the PID sleep function ends. To control PID sleep, use parameters 4022 through 4026 or 4122 through 4126.
2019	ID RUN	The VFD is performing an ID run.
2020	OVERRIDE	Override mode is activated.
2021	START ENABLE 1 MISSING	This alarm warns that the Start Enable 1 signal is missing. To control Start Enable 1 function, use parameter 1608. To correct, check the digital input configuration and the communication settings.
2022	START ENABLE 2 MISSING	This alarm warns that the Start Enable 2 signal is missing. To control Start Enable 2 function, use parameter1609. To correct, check the digital input configuration and the communication settings.
2023	EMERGENCY STOP	Emergency stop is activated.

* This alarm is not indicated by a relay output, even when the relay output is configured to indicate alarm conditions, parameter 1401 RELAY OUTPUT = 5 (ALARM) or 16 (FLT/ALARM).

Reset After Using Start-Up Assistant

⚠ CAUTION

CONFIGURATION OVERRIDE HAZARD

DO NOT USE ABB OR CARRIER START-UP ASSISTANT ON THIS VFD APPLICAITON! Use of start-up assistant will override the factory VFD configurations!

The following section details how to reset the VFD after accidentally using Start-Up Assistant.

When the VFD has been incorrectly programmed by using Start-Up Assistant, the drive may be locked in an override loop because of motor *ID Run Fai*l (error code 11) and *First Start* (error code 2025).

1. Disconnect unit power. Lock-out/tag out.
2. Remove the VFD's front cover (see Fig. 24)

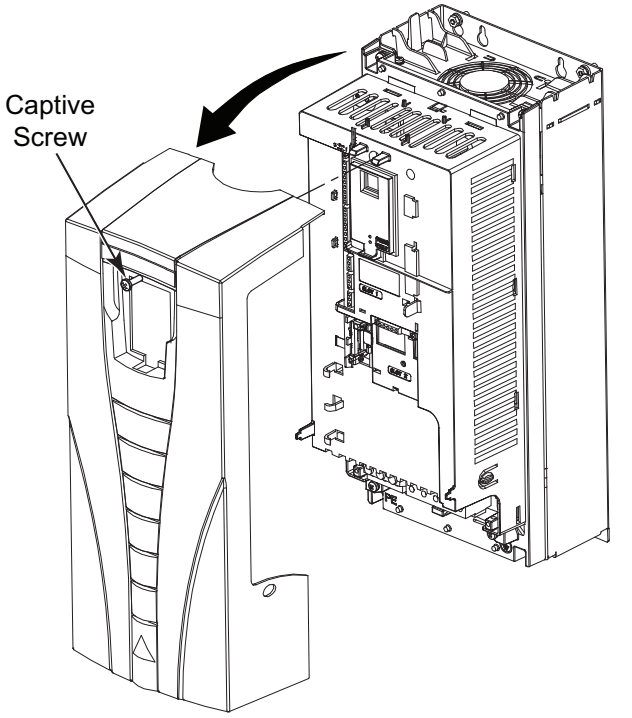

Fig. 24 - Remove VFD Front Cover

3. Disconnect the DI1 input at Terminal 13 (see Fig. 25 for location of DI1).
4. Connect the VFD Keypad accessory to the VFD (if not already connected).

NOTE: The VFD Keypad is a field-installed accessory; it is not included with the factory-installed VFD option.

5. With the wire disconnected, use the keypad to stop the loop and enter "*358*" in parameter 1704 OVERRIDE PASS CODE.
6. Go immediately to parameter 1705 OVERRIDE ENABLE and select "*Off*".
7. At this point, providing you have a clean backup of the drive, you can select "*DOWNLOAD FULL SET*" from '*PAR BACKUP*" from the Main Menu.

   If you do not have a clean backup the drive will have to be manually programmed following the instructions in this document.
8. When the correct parameters have been uploaded, disconnect power to the unit, reconnect DI1 to Terminal 13, and replace the VFD cover.
9. Reconnect power to the unit. The VFD is now commissioned from the backup file.

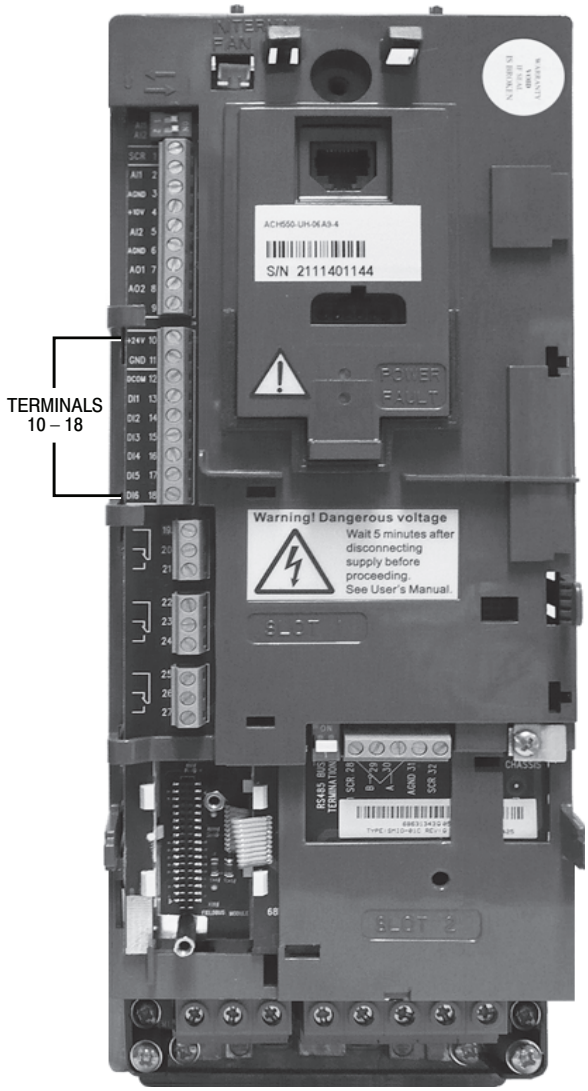

Fig. 25 - Location of VFD Terminal Strip

©2015 Bryant Heating and Cooling Systems • 7310 W. Morris St. • Indianapolis, IN 46231
Edition Date: 03/15

Catalog No: IIVFD−04

Manufacturer reserves the right to change, at any time, specifications and designs without notice and without obligations.

Replaces: IIVFD−03