DEHXXCDA
Dehumidifier with R-32 Refrigerant
DEHXXCDA1080AA04, DEHXXCDA1100AA04

Installation Manual

NOTE: Read the entire Instruction Manual before starting the installation.

Table of Contents

Table of Contents 1
Safety Considerations 1
Specifications 2
Set Up Dehumidifier for Installation 3
Packaging Content 3
Control Location 3
Installing the Duct Collars 3
Installing the Dehumidifier 4
Dehumidifier Location 4
Closet Installations 4
Leveling and Raising the Dehumidifier 4
Suspended Installation 4
Installing a Condensate Pan Under the Dehumidifier 5
Drain Installation 5
Using Hard Pipe 5
Using Flexible Tubing 5
Installing Ductwork 5
Wiring 8
Wiring to the HVAC System 8
Wiring to External or Remote Controls 8
Wiring a Float Switch 8
Communicating Furnaces and Fan Coils Only 9
Ventilation 9
Zoning the Dehumidifier 10
Required Components 10
System Set-Up & Checkout 11
Installer Test Mode 13
Start-Up and Sequence of Operation 13
Single Zone Whole House Or Stand Alone Using the Dehumidifier Control 13
Crawl Space Or Sealed Attic Remote Control Using Model 76C 14
Crawl Space Or Sealed Attic External Control 14
Two Zone – Primary And Secondary 14
Service Instructions. 14
Troubleshooting 15
Table 1 - Diagnostic Codes 15
Table 2 - Troubleshooting Guide 17
Service Parts 18

Safety Considerations

Improper installation, adjustment, alteration, service, maintenance, or use can cause explosion, fire, electrical shock, or other conditions which may cause death, personal injury or property damage. Consult a qualified installer, service agency, or your distributor or branch for information or assistance. The qualified installer or agency must use factory-authorized kits or accessories when modifying this product. Refer to the individual instructions packaged with kits or accessories when installing.

Follow all safety codes. Wear safety glasses, protective clothing and work gloves. Have a fire extinguisher available. Read these instructions thoroughly and follow all warnings or cautions included in literature and attached to the unit. Consult local building codes and the current editions of the National Electrical Code (NEC) NFPA 70.

Recognize safety information. This is the safety-alert symbol. ⚠ When you see this symbol on the unit and in instructions manuals, be alert to the potential for personal injury.

Understand the signal words **DANGER**, **WARNING**, and **CAUTION**. These words are used with the safety-alert symbol. **DANGER** identifies the most serious hazards which will result in severe personal injury or death. **WARNING** signifies hazards which could result in personal injury or death. **CAUTION** is used to identify unsafe practices which may result in minor personal injury, product and property damage, or cause the equipment to not operate. **NOTE** is used to highlight suggestions which will result in enhanced installation, reliability, or operation.

⚠ WARNING

ELECTRICAL SHOCK HAZARD: Failure to follow this warning could result in personal injury or death. Disconnect electrical power to the HVAC system before proceeding.

ELECTRICAL SHOCK HAZARD: 115-volts may cause serious injury or death from electrical shock. Disconnect and tag electrical service before starting installation or field-service. Leave electrical service disconnected until installation or field-service is complete.

ELECTRICAL SHOCK HAZARD: An interrupted or broken ground may cause property damage, serious injury or death should an electrical fault occur. The cabinet must be grounded in accordance with NEC ANSI/NFPA 70-2011 or local codes. In Canada, refer to Canadian Electrical Code CSA C22.1.

FIRE HAZARD: Use of improper wire may cause serious injury, property damage or death due to fire. Do not use aluminum wire for electrical service to the dehumidifier. Use only copper wire.

⚠ CAUTION

CUT HAZARD: Failure to follow this caution may result in personal injury. Sharp metal edges can cause personal injury from cuts. Use gloves when cutting plenum openings and handling ductwork.

⚠ CAUTION

1. Read all instructions before beginning installation.
2. Improper installation may cause property damage or injury. Installation, service, and maintenance must be performed by a qualified service technician.
3. Do not use in pool applications. Pool chemicals can damage the dehumidifier.
4. Do not use solvents or cleaners on or near the circuit board. Chemicals can damage circuit board components.
5. Wait 24 hours before running the unit if it was not shipped or stored in the upright position
6. Do not use dehumidification to prevent window condensation in the winter. To address window condensation, use ventilation to lower indoor humidity in the winter.
7. Dropping may cause personal injury or equipment damage. Handle with care and follow installation instructions.
8. This appliance is not intended for use by persons (including children) with reduced physical, sensory or mental capabilities, or lack of experience and knowledge, unless they have been given supervision or instruction concerning use of the appliance by a person responsible for their safety.
9. Children should be supervised to ensure that they do not play with the appliance.
10. If the supply cord is damaged, it must be replaced by a special cord or assembly available from the manufacturer or its service agent.

⚠ WARNING

RISK OF FIRE OR EXPLOSION:

1.Flammable refrigerant used.
2.To be repaired only by trained service personnel.
3.Do not puncture refrigerant tubing.

4. Store in well ventilated room without continuously operating flames or other potential ignition sources.
5. Auxiliary devices which may be ignition sources shall not be installed in duct work.
6. Consult Repair Manual/Owner's Guide before attempting to service this product. All safety precautions must be followed.
7. Dispose of properly in accordance with Federal or local regulations.

Specifications

	Model DEHXXCDA1080AA04		Model DEHXXCDA1100AA04	
Unit Weight	63 lbs.		64 lbs.	
Shipping Weight	81 lbs.		82 lbs.	
Capacity 80°F, 60% RH Conditions	Up to 80 pints per day @ 185 CFM		Up to 100 pints per day @ 280 CFM	
Current Draw 115 VAC, Single Phase, 60Hz	4.8A operating current		6.7A operating current	
Dehumidifier Inlet Air Conditions	Dehumidification: 50°F – 104°F, 40°F dew point minimum Ventilation: 40°F – 140°F, 0%RH – 99%RH (non-condensing)			
Filter	MERV 8, washable			
Airflow	**External Static Pressure ("w.c.)**	**Airflow (CFM)**	**External Static Pressure ("w.c.)**	**Airflow (CFM)**
	0.0	185	0.0	280
	0.2	135	0.2	245
	0.4*	85	0.4	210
			0.6*	175

*Maximum design external static pressure.

NOTE: Rated capacity and current draw measured at 80^{0}F/60% RH inlet conditions at 0.0 external static pressure.

Set Up Dehumidifier for Installation

IMPORTANT: Cut the strap securing the compressor shipping support bracket and remove the strap and shipping bracket. (**Fig. 1**)

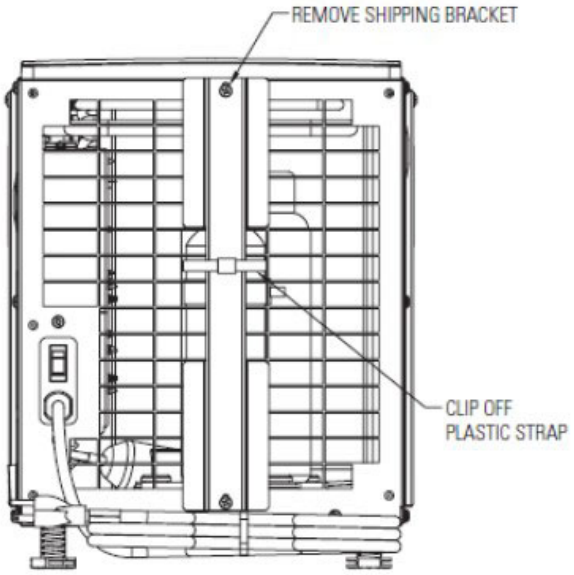

A240028

Fig. 1 – Remove Shipping Bracket

Packaging Content

1. Dehumidifier
2. Inlet/Outlet Collars
3. Literature
   a. Installation Instructions
   b. Owner's Manual
4. Parts Bag
   a. Screws (9)
   b. T20 Torx Bit
5. 3/4" MNPT x 3/4" barbed fitting for drain connections

Control Location

The on-board control can be located on the top of the dehumidifier or can be relocated to the front of the dehumidifier (**Fig. 2**) if the control cannot be seen/accessed in the top orientation. It may also be rotated 180 degrees in either orientation as shown in **Fig. 3**.

To move the control:

1. Remove the front control panel cover.
2. Remove the filter access door and filter.
3. Detach the on-board control by removing the four (4) screws around the control.

NOTE: Use one hand to support the bottom of the on-board control when removing.

4. Keep the control in the unit and relocate to the front access hole.
5. Secure the control with the same four screws used to attach the control to the top of the unit.
6. Secure the control panel cover to the top of the unit.

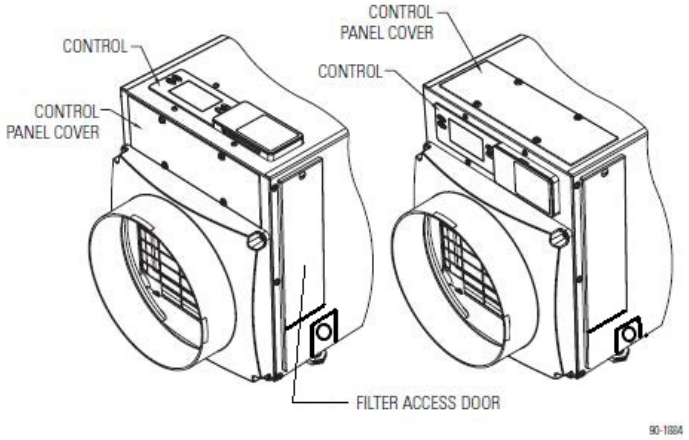

A240049

Fig. 2 – Control Location

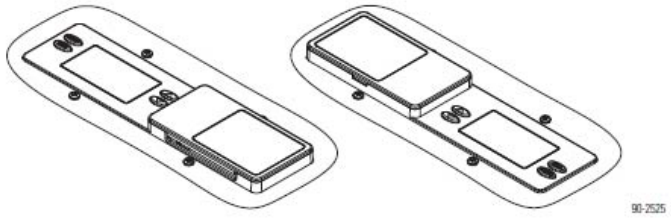

A240050

Fig. 3 – Control Rotated 180 Degrees

Installing the Duct Collars

- Use the screws in the parts bag to attach the duct collars to the inlet and outlet of the dehumidifier. The outlet collar has a backflow damper.
- The outlet duct collar may be attached to the top or end of the unit. Move the outlet cover to the location not being used. See **Fig. 4**.
- Make sure there are no bends in the ductwork coming off the outlet for a minimum of 4". This precaution will ensure that the ductwork will not interfere with the backflow damper function.

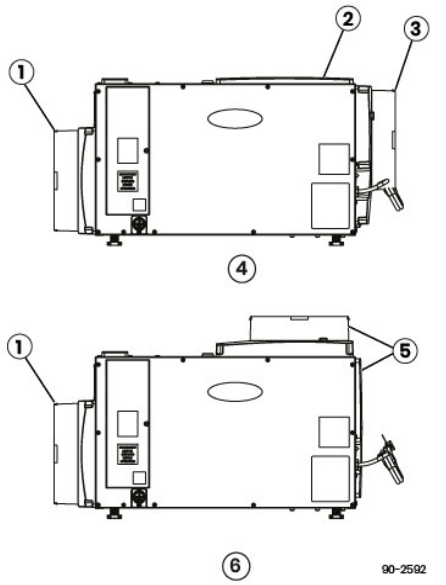

Figure 11: Fully Ducted Installations

1 - Inlet Duct Collar
2 - Outlet Cover
3 - Outlet Duct Collar w/ Back Draft Damper
4 - End Discharge
5 - Move Outlet Cover and Install Outlet Duct Collar to Top Discharge Location
6 - Top Discharge

A240047

Fig. 4 – Fully Ducted Installations

Installing the Dehumidifier

Dehumidifier Location

- Electrical service access and drain cleaning will require the removal of the electrical service side panel (Fig. 5). Allow sufficient space for service on this side of the unit.
- The filter can be removed from either side of the dehumidifier. Allow sufficient space for the filter to be removed and reinstalled.
- If locating the unit where it is not readily accessible (such as a crawl space, an attic or even a basement for some individuals), consider controls such as the Model 76C Dehumidifier Control, which can be mounted in the living space and wired to the dehumidifier.
- For attic installations, suspending the dehumidifier is recommended.
- Always install the dehumidifier in or above a condensate pan when locating in or above a finished space.

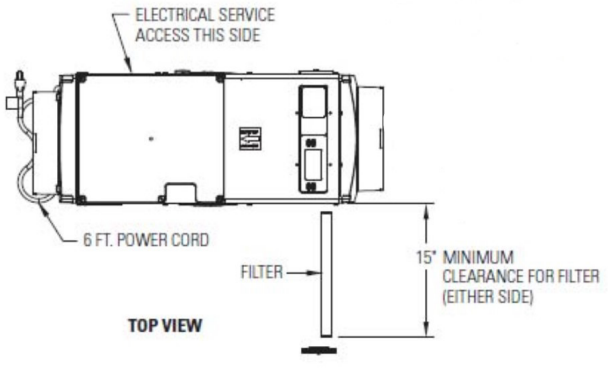

A240051

Fig. 5 – Filter Access Clearance

Closet Installations

WARNING

Closet installations are not approved with gas furnaces.
Only install dehumidifier in a closet with electric heat or a fan coil system.

NOTE: Do not install the dehumidifier underneath the fan coil in a closet installation. Airflow can be restricted or moisture may damage the dehumidifier.

Use the screws provided in the parts bag to attach the duct collars if desired or required based on recommendations below:

- Where inlet space is restricted, the inlet duct collar is optional.
- When the dehumidifier requires a ducted vertical discharge, remove the top access panel and remount on the outlet of the unit. Install the outlet duct collar with backflow damper on top of the unit. (Fig. 4)

Leveling and Raising the Dehumidifier

IMPORTANT: These instructions must be followed to ensure proper draining.

Extend the dehumidifier feet by rotating clockwise until the dehumidifier is approximately 1-1/2" off the floor or ground. Blocks can be used for additional height.

Use the feet to level the dehumidifier. Refer to the bubble level located on top of the dehumidifier, the bubble must be within the outer circle to ensure proper draining (Fig. 6). Leveling is required to ensure proper drainage from the dehumidifier.

If installing a condensate pump to the side of the unit more elevation than can be provided by the adjustable feet may be needed. Risers or hanging kits are available to lift the dehumidifier higher off the floor.

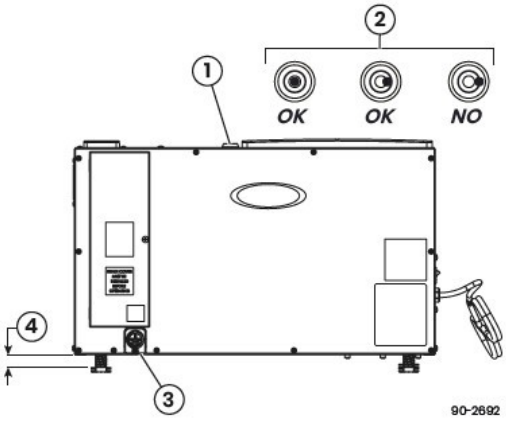

Leveling the Unit

1 - Bubble Level
2 - Bubble Level Detail
3 - 3/4" Drain
4 - 0.38" Minimum 2.00" Maximum

A240054

Fig. 6 – Leveling the Unit

Suspended Installation

If hanging the unit, use 1/4" (minimum) threaded rod and two unistruts {not included} to support the base, just inside the leveling feet. It is recommended that vibration isolators be placed between the unistruts and dehumidifier base. (Fig. 7) Do not position threaded rods over filter access doors.

Allow 3" between the unit and threaded rods on the service access to remove the side panel if service is required. There must be a minimum clearance of 12" on one side of the unit to allow for removal of the filter.

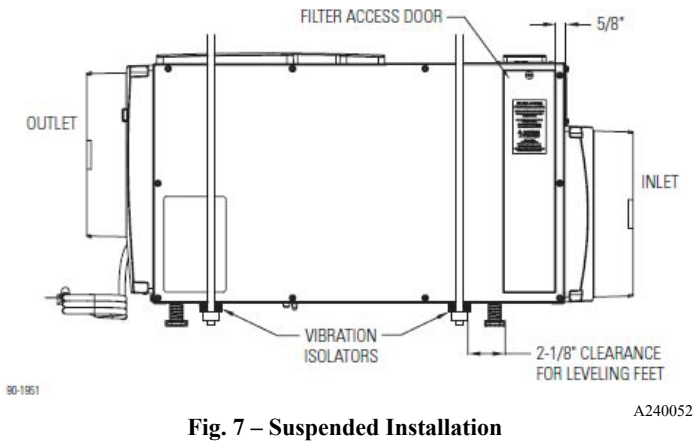

Fig. 7 – Suspended Installation

Installing a Condensate Pan Under the Dehumidifier

Always install the dehumidifier in or above a condensate pan when locating it above a finished space. Adhere to local codes regarding draining of the condensate pan. If a condensate pump is needed, make sure it is in the condensate pan as well. Install a float switch in the condensate pan and/or use the overflow wires/terminals on the condensate pump to stop the dehumidifier should overflow occur. See Wiring to a Float Switch on page 8. The condensate pan and pump are not included with the dehumidifier and must be purchased separately.

Drain Installation

NOTE: Always install the dehumidifier in or above a condensate pan when locating it above a finished space. Adhere to local codes regarding draining of the condensate pan. If a condensate pump is needed, make sure it is in the condensate pan as well. Install a float switch in the condensate pan and/or use the overflow wires/terminals on the condensate pump to stop the dehumidifier should overflow occur. The condensate pan is not included with the dehumidifier and must be purchased separately.

⚠ CAUTION

Do not damage drain insert. The drain insert is a critical feature of the dehumidifier drain management system.

⚠ WARNING

Running the dehumidifier without the drain insert can lead to condensate leaks.

Using Hard Pipe

NOTE: Remove drain insert (Fig. 8) before priming and gluing in the PVC fitting. Replace drain insert after PVC glue has fully dried.

- Install a 3/4" PVC slip x 3/4" MNPT PVC fitting to the dehumidifier and use 3/4" nominal PVC Schedule 40 pipe to run the condensate line to the nearest floor drain or to an outside location that slopes away from the building.
- Always maintain a constant downward slope in drain piping. Ensure that drain tubing does not interfere with removal of the side panel or filter door.
- **Do not use metal fittings and only hand-tighten threaded fittings.** PTFE thread seal tape is recommended for threaded connections.
- Install a tee or three-way elbow at the dehumidifier outlet with a small, capped vertical tube (do not cement cap in place) to allow for cleaner to be poured into the drain line (Fig. 9).
- PVC primer and cement is recommended for slip-fit connections (do not cement threaded connections).

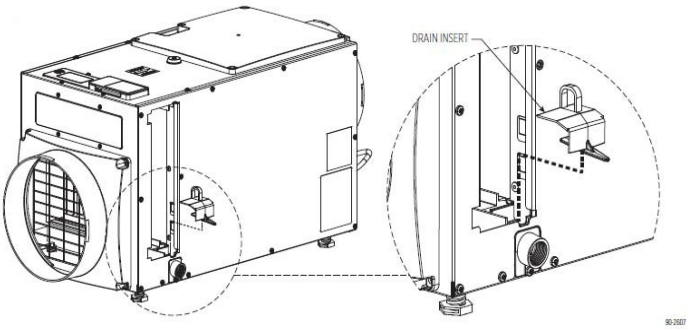

Fig. 8 – Drain Insert

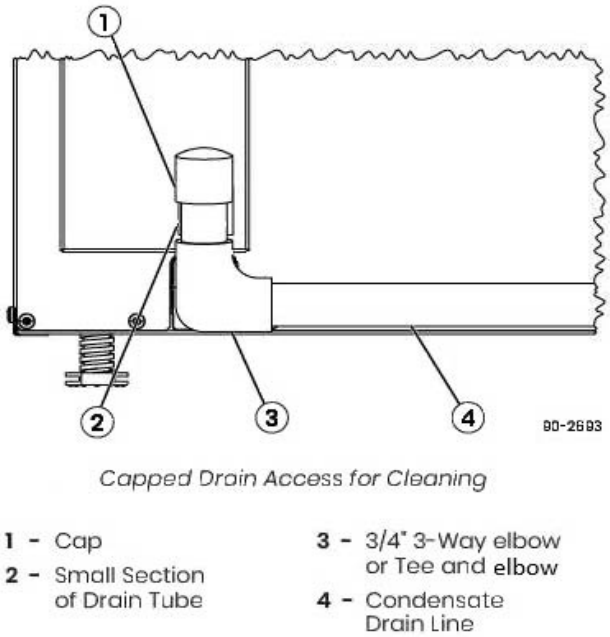

Fig. 9 – Capped Drain Access for Cleaning

Using Flexible Tubing

• Install the provided 3/4" NPT x 3/4" hose barb fitting and use 3/4" flexible drain tubing. **Hand-tighten the fitting to the dehumidifier.** PTFE thread seal tape is recommended for threaded connections.

• Always maintain a constant downward slope from the dehumidifier to the nearest floor drain or condensate pump, and do not allow soft tubing to curl up, which may result in air lock.

Installing Ductwork

- Use insulated duct when the dehumidifier is located in an unconditioned space, such as an attic, garage or crawl space, or if connecting a fresh air duct to the dehumidifier ductwork.
- Use zip ties, mastic, and tape as needed to seal the duct connections to the dehumidifier and to seal the insulation sleeves to prevent condensation inside the ductwork.

Connecting the dehumidifier to your HVAC system will pull air to be dehumidified from the whole home and similarly will discharge air to the whole home. Make sure the duct system pressure the dehumidifier will have to operate against does not exceed 0.4" Water Column (WC) for Model DEHXXCDA1080AA04 and 0.6" WC for Model

DEHXXCDA1100AA04. Measure the system pressure when the HVAC fan is operating at the highest airflow (speed) setting.

There are not always readily available locations on the HVAC duct system for connecting 10" ducts, and some local codes do not allow ducting to the return side of the HVAC system. If so, another option is to install just the discharge of the dehumidifier to the HVAC system or to use dedicated registers for both the inlet and discharge of the dehumidifier.

- To direct dehumidified air away from a potentially wet AC coil:
  - Duct to the supply side of the HVAC system for air handler applications where air is pulled through the AC coil (see Figure 10).

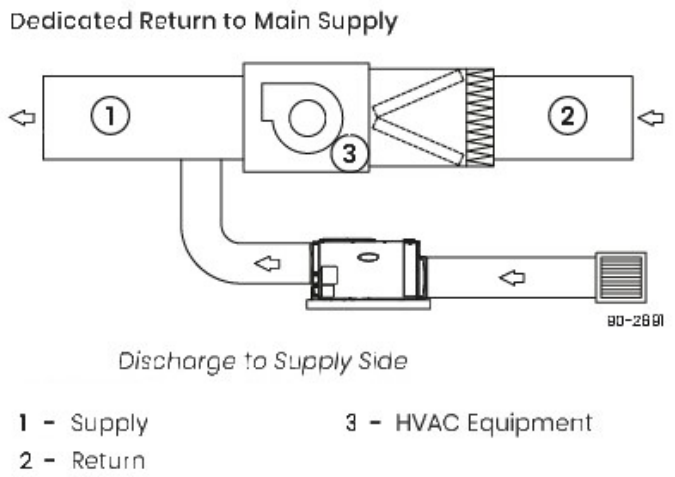

A2400112

Fig. 10 – Dedicated Return to Main Supply

- Duct to the return side of the HVAC system for furnace applications where air is pushed through the AC coil. Check local codes to verify that ducting to the return side of the HVAC system is allowed (**Fig. 10**).

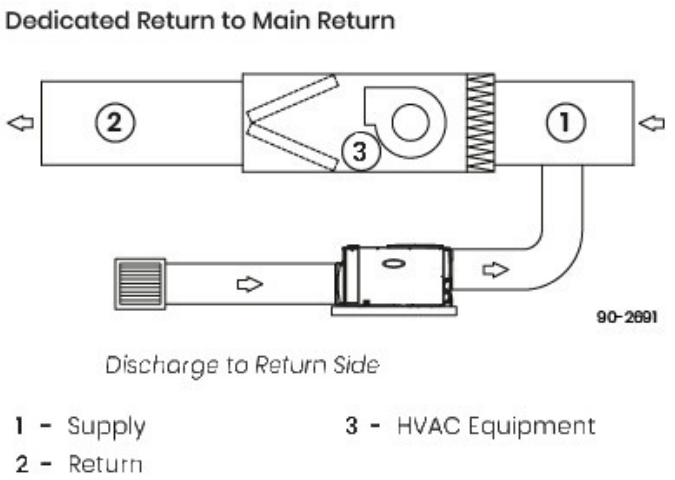

A240113

Fig. 11 – Dedicated Return to Main Return

- Wire the dehumidifier to the HVAC system as shown in **Fig. 14** and set up the dehumidifier to be disabled when the AC is running.

Use dedicated registers to duct the dehumidifier to the whole home when HVAC system ductwork is unavailable or impractical (**Fig. 12**).

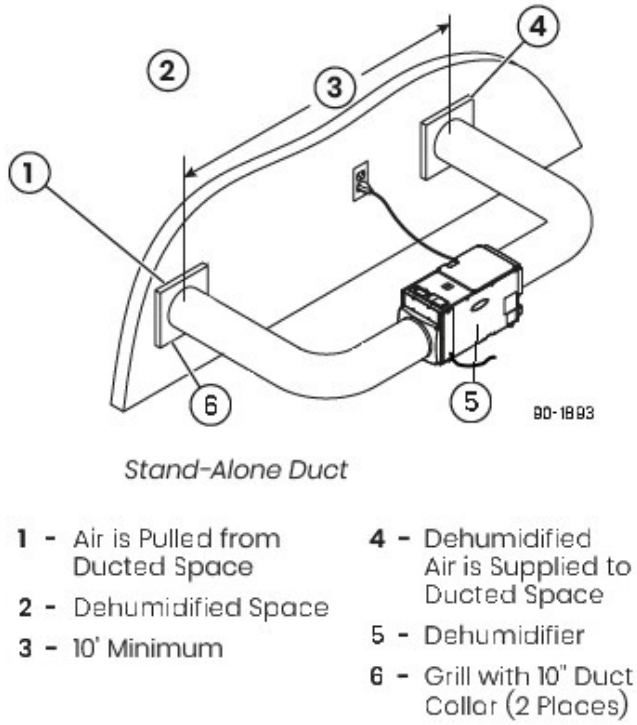

A240042

Fig. 12 – Stand-Alone Ducting

⚠ CAUTION

Installing the dehumidifier in the Alternate applications will result in reduced performance based on amount of external static pressure.

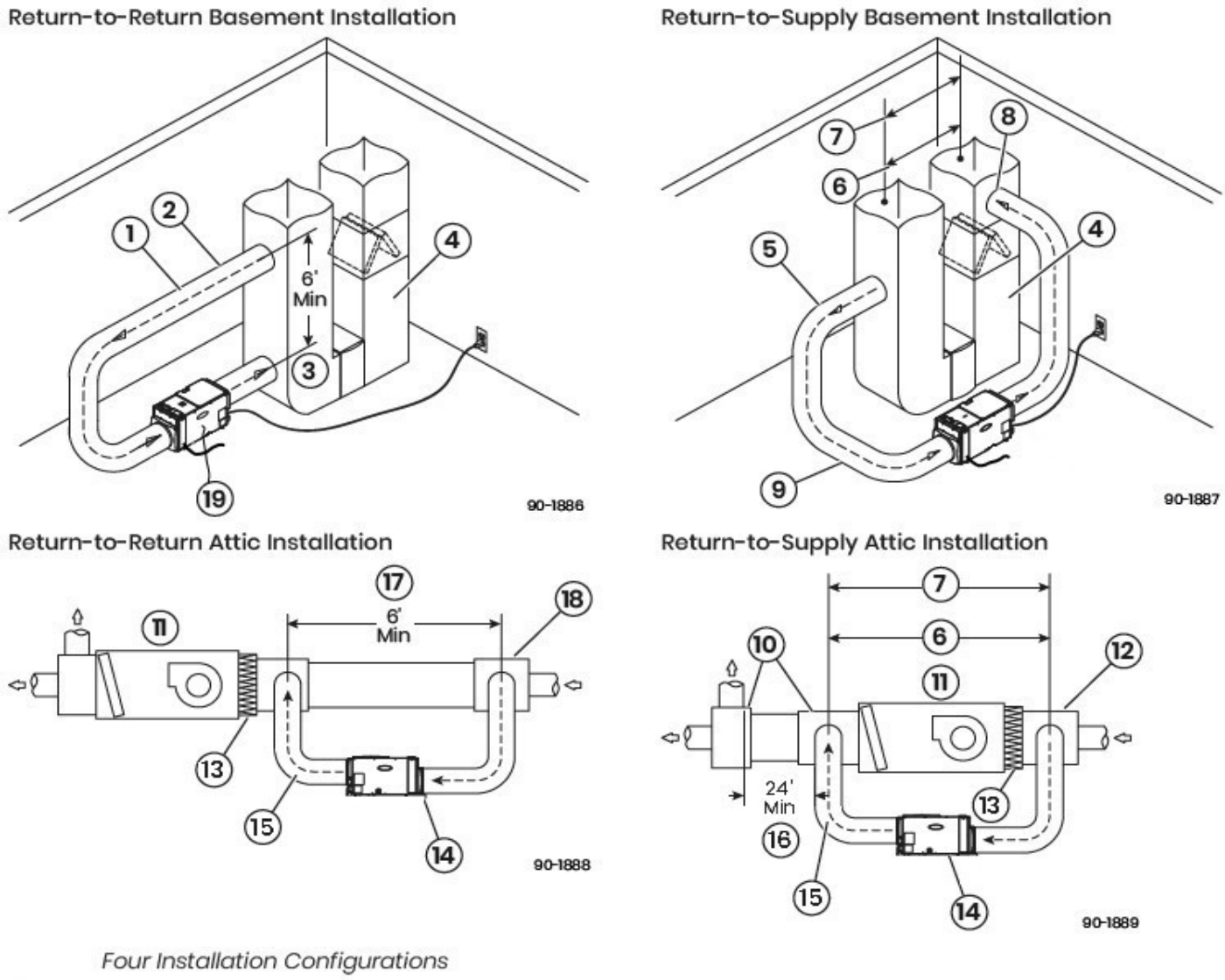

Four Installation Configurations

1 - Air is Pulled from the Main Return Duct and Discharged to the Main Return Duct
2 - 10" Duct
3 - 6' Minimum
4 - HVAC/Furnace
5 - Air is Pulled from the Main Return Duct
6 - Model DEHXXCDA1080AA04 0.4" WC Maximum
7 - Model DEHXXCDA1100AA04 0.6" WC Maximum
8 - Air is Discharged to the Supply Duct
9 - 10" Duct
10 - Plenum Box
11 - Air Handler
12 - Plenum
13 - Filter
14 - Condensate Pan
15 - 10" Diameter Insulated Duct Both Sides
16 - 24" Minimum
17 - 6' Minimum
18 - Plenum Box or Y-Fitting
19 - Dehumidifier

A240110

Fig. 13 – Four Installation Configurations

- Use when both sides of the duct system are accessible (**Fig. 13**).
- When ducting from return to supply, the HVAC blower does not need to be running when the dehumidifier is running.
- When ducting return to supply, allow adequate space before the first branch duct to ensure the warm dehumidified air is thoroughly mixed with the HVAC system air.
- When ducting from return to return, wire the dehumidifier to the HVAC system as shown in **Fig. 14** to ensure the HVAC blower runs when the dehumidifier is operating.
- Wire the dehumidifier to the HVAC system (**Fig. 14**) for exact wiring) and set up the dehumidifier to be disabled when the AC is running.

Wiring

No additional wiring is needed unless:

- the dehumidifier is ducted to the HVAC system
- a separate, external control such as a thermostat or dehumidistat is to be used
- a float switch, either integral to a condensate pump or mounted to the condensate pan, is used Use 18-22 AWG wire for any needed wiring. Access the dehumidifier wiring terminals by pulling off the wiring access cover near the dehumidifier control display (**Fig. 2**). Snap the wiring access cover back into place after completing all wiring.

Wiring to the HVAC System

When the dehumidifier is ducted to the HVAC system, it is recommended that it also be wired to the HVAC system as shown in Figure 20. If ducted to the HVAC system in a return-to-return configuration, the dehumidifier must be wired to the HVAC system to prevent short-circuiting dehumidified air directly back to the dehumidifier inlet. In a return-to-supply ducting configuration, running the HVAC fan with the dehumidifier ensures the warm dry air is mixed with room air before being discharged to the home.

Optional W & Y Wiring

Wire the W and/or Y terminal to the HVAC system when using the ventilation feature of the dehumidifier (see VENTILATION, **Fig. 23**).

NOTE: Only wire W if ventilation is required with outdoor temperatures below 20°F (-7°C). (**Fig. 14**)

Wire the dehumidifier Y terminal to the HVAC system (**Fig. 14**) if it is desired to disable the dehumidifier compressor from operating when the air conditioning is running. See DEH W/AC in SYSTEM SET-UP on **page 11** for additional set up steps required to access this feature.

ENERGY SAVING RECOMMENDATION: Select "DEH w/AC DISABLED". This allows the AC unit to dehumidify first and if it does not satisfy the dehumidification demand, the dehumidifier will run.

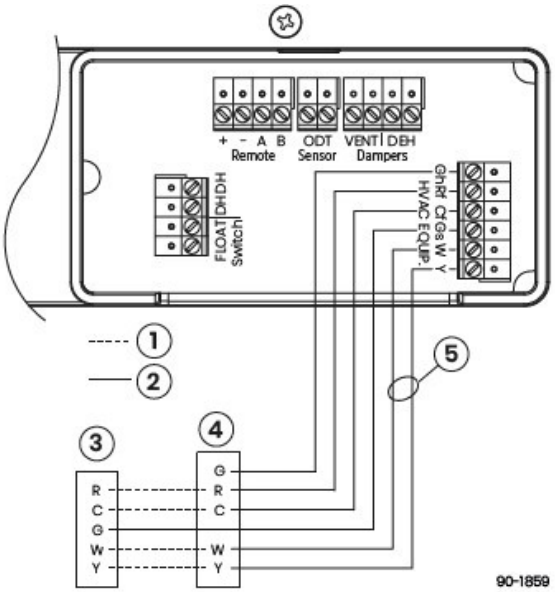

Wiring to HVAC System

1 - Existing Wire
2 - New Wire
3 - Thermostat or Zone Control Board
4 - HVAC Equipment
5 - Optional Wires

A240062

Fig. 14 – Wiring to HVAC

Wiring to External or Remote Controls

The dehumidifier can be wired to an external control that senses the humidity in the living space, such as a Model 76C Dehumidifier Control. This is most often done when the dehumidifier is ducted to the HVAC system and is located in a hard-to-reach location such as an attic or basement.

The Model 76C, when used as a remote control, allows the user to see the humidity sensed by the dehumidifier and adjust the dehumidifier setting from a remote location. This is most often used when the dehumidifier is not ducted to the HVAC system and serves a hard-to-reach location such as a crawl space or basement.

If using an external control, wire to the DH terminals of the dehumidifier (**Fig. 15**). Most external controls use a normally open switch that closes with a dehumidification demand, in which case leave the NC/NO switch in the NO position. For controls that use a normally closed switch, put the NC/NO switch in the NC position. If using the Model 76C as a remote control, wire to the {+ - A B} terminals. Refer to the installation instructions for the control being used for wiring details.

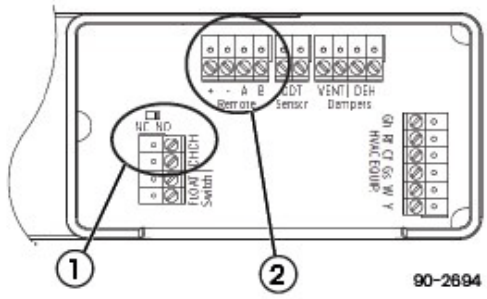

Wiring to an External or Remote Control

1 - Use for External Control Applications
2 - Use for Remote Control Applications

A24055

Fig. 15 – Wiring to an External or Remote Control

Wiring a Float Switch

Use only if the installation includes a float switch or a condensate pump. The dehumidifier leaves the factory with a jumper wire installed in the float switch terminals. Remove the jumper and wire the float switch terminals to the float switch or condensate pump overflow switch as shown in **Fig. 16**.

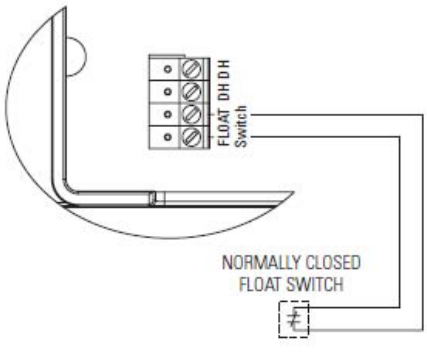

A240055

Fig. 16 – Float Switch Wiring

Communicating Furnaces and Fan Coils Only

1. Configure the G terminal at the user interface and set fan speed. (Fig. 17)
2. Wire the Gh, Rf, Cf and Y terminals from the dehumidifier to the furnace. (Fig. 18)

240063

Fig. 17 – Using Dehumidifier with Infinity/Evolution Control

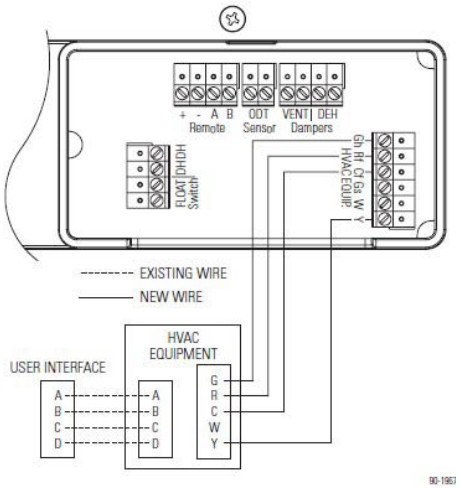

A240064

Fig. 18 – Wiring Infinity/Evolution Control

Ventilation

The dehumidifier can activate a normally closed damper to bring in outdoor air through a fresh air intake duct. This feature cannot be used when a Model 76C has been installed in a remote control application and should not be used in two-zone installations.

1. Install the Fresh Air Inlet (FAI) duct and damper as shown in Fig. 19 and Fig. 20.

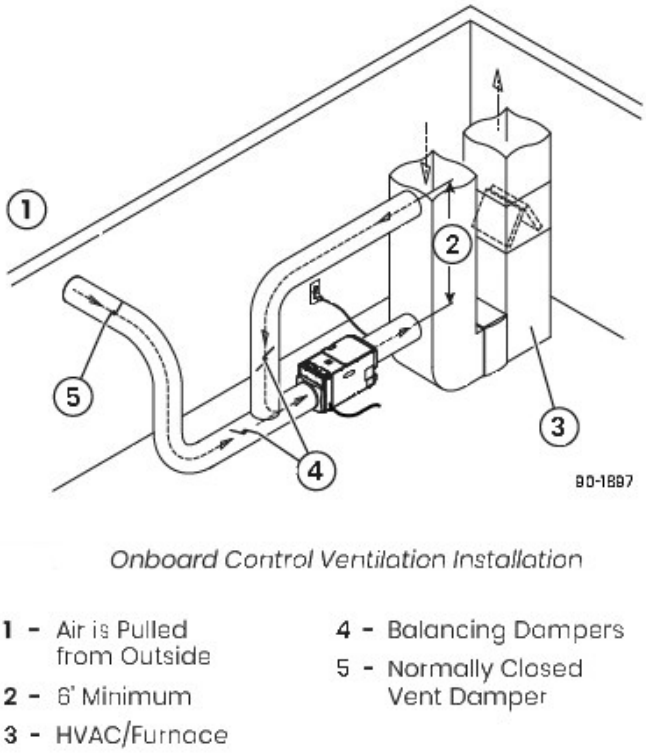

A24067

Fig. 19 – Onboard Control Ventilation Installation0

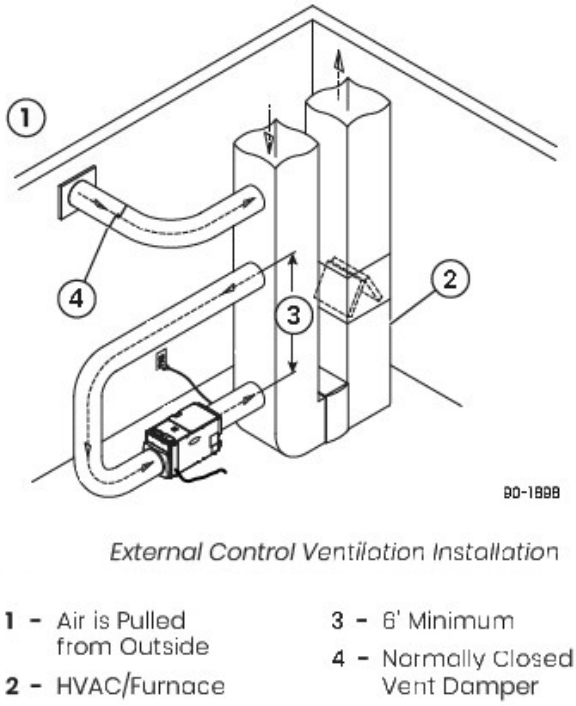

A240068

Fig. 20 – External Control Ventilation Installation

2. Install the Outdoor Temperature Sensor (ODT) as shown in Fig. 21 and Fig. 22 – only needed if ventilation will be limited during high or low outdoor temperature conditions.

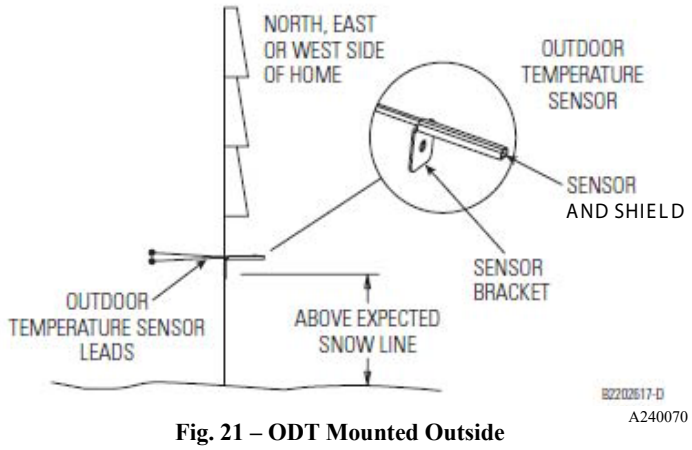

Fig. 21 – ODT Mounted Outside

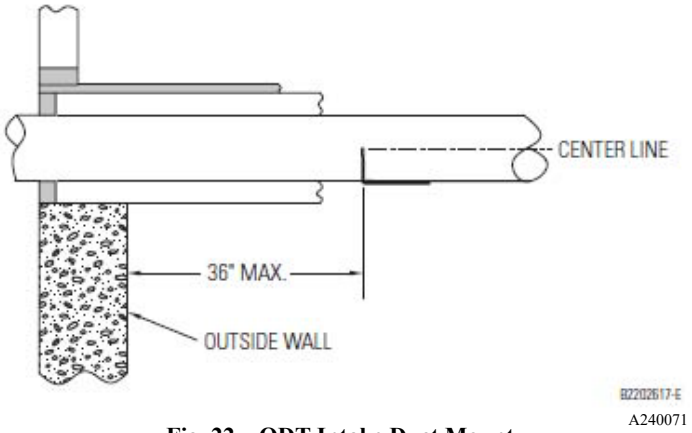

Fig. 22 – ODT Intake Duct Mount

3. Wire the FAI damper, HVAC equipment and outdoor temperature sensor to the dehumidifier control as shown in **Fig. 23**.

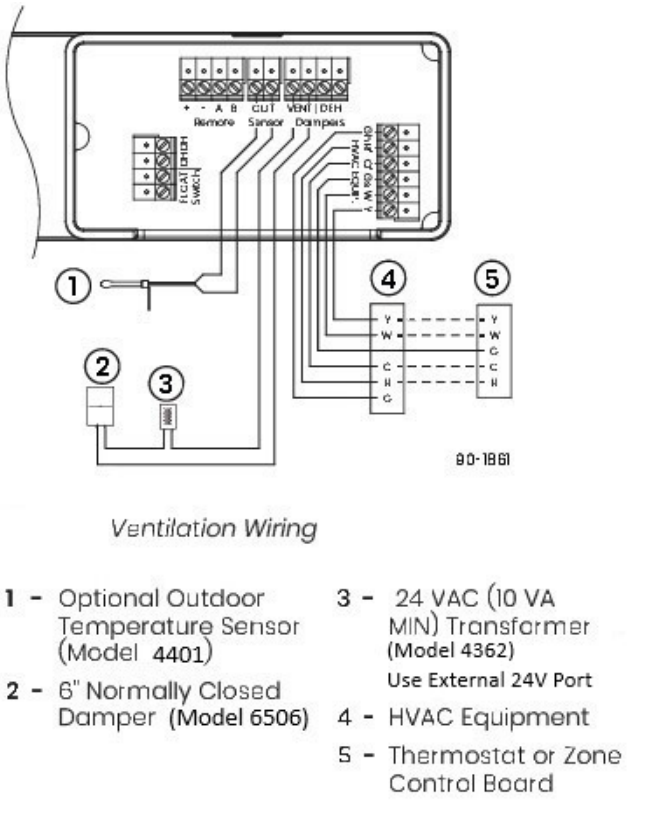

Fig. 23 – Ventilation Wiring

4. Use the setup menu to ENABLE ventilation:
   a. Enter the installer setup menu (**page 11**).
   b. Press the Mode button until the words VENT DISABLE appear.
   c. Press the UP or DOWN button to change to VENT ENABLE.
   d. Press the Mode button and the words VENT TIMED will appear. Press the Up or DOWN button to set temperature limits:
   - TIMED: no temperature limits
   - AUTO – B: Ventilation is not allowed if the ODT > 100°F or ODT < 0°F; ventilation is allowed only when the heat is on if the ODT is between 0°F and 20°F
   - AUTO – C: Ventilation is not allowed if the ODT > 100°F or ODT < 0°F
   - AUTO – D: Ventilation is not allowed if the ODT > 90°F; ventilation is allowed only when the heat is on if the ODT is between 0°F and 40°F
   e. .Press the Mode button and then use the s or t button to set the ventilation time (minutes/hour).
   f. Press the Mode button repeatedly until the word DONE appears on the display.

Whenever the heating, cooling or dehumidifier is turned on, the ventilation damper will open and bring in outdoor air. If the equipment doesn't run for the set number of minutes, the dehumidifier will turn on the HVAC fan at the end of the hour to ensure ventilation needs are met.

Zoning the Dehumidifier

The dehumidifier can be configured to condition two independent spaces. Zoning requires the installation of ductwork and dampers to direct air to and from two locations. Scan the QR code for details on zoning the installation.

NOTE: Dehumidifier zoning is not recommended in HVAC zoning applications.

In this installation the dehumidifier controls the humidity in two separate zones, a Primary and Secondary Zone. The dehumidifier will dehumidify the Primary Zone as the first priority and will switch to the Secondary Zone after the dehumidification needs of the Primary Zone have been satisfied.

IMPORTANT: Normally Closed dampers must be installed in the ducts serving the Primary Zone and Normally Open dampers installed in the ducts serving the Secondary Zone.

Required Components

- 10" ductwork and fittings
- Grilles with 10" duct collars
- Drain line
- 2 – Model 6510C, 10" Normally Closed damper
- 2 – Model 6610C, 10" Normally Open damper
- 1 – 24 VAC transformer (40 VA min.) for dampers

NOTE: KDAZK0101DHM Zoning Kit includes 2 – 6510C Dampers, 2 – 6610C Dampers and a 24VAC (40VA) transformer.

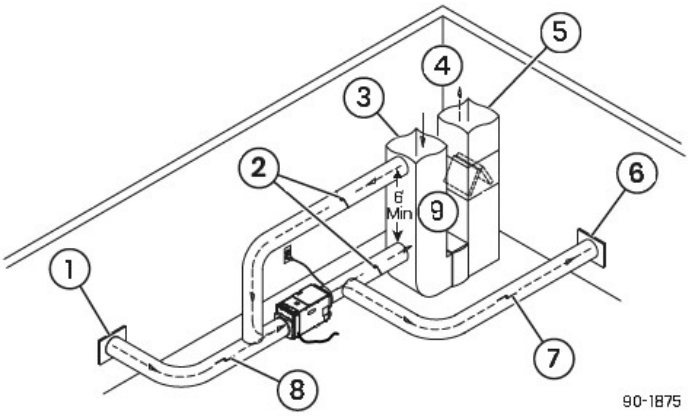

Whole-Home Primary Zone Installation

1 - Return from Secondary Zone
2 - Normally Closed Dampers
3 - Return Duct
4 - To/From Primary Zone
5 - Supply Duct
6 - Supply to Secondary Zone
7 - Normally Open Damper
8 - Normally Open Damper
9 - 6' Minimum

A240118

Fig. 24 – Whole-Home Primary Zone Installation

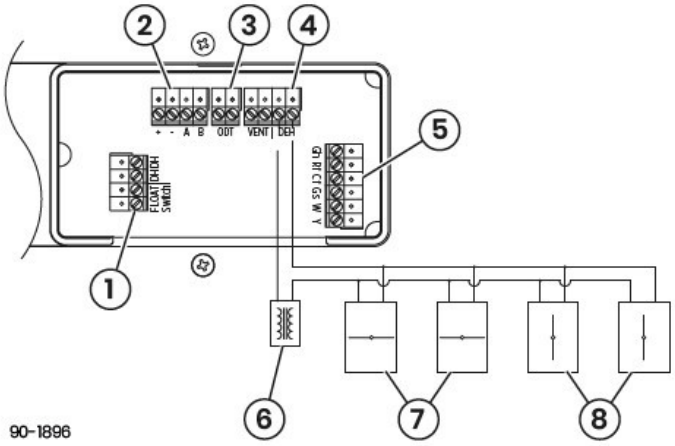

Two-Zone Wiring On-Board Control

1 - FLOAT Switch
2 - Remote
3 - Sensor
4 - Dampers
5 - HVAC Equipment
6 - 24 VAC (40 VA Min.)
7 - Normally CLosed (Primary Zone)
8 - Normally Open (Secondary Zone)

A2400066

Fig. 25 – To Zone Wiring On-Board Control

NOTE: Dehumidifier zoning is not recommended in HVAC zoning applications.

System Set-Up & Checkout

If dehumidifier installation does not include ventilation or zoning and will not be wired to an external control, remote control or the HVAC system, proceed to Installer Test Mode section on **page 13**.

1. Check all wiring.
2. Make sure the wire access cover has been snapped back onto the on-board control.
3. Plug unit in and turn power switch to ON.
4. The on-board control screen should display OFF.

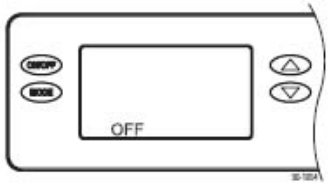

OBC1

NOTE: If the display backlight is not on, the first button press (any button) will only turn on the backlight. Press the button a second time to achieve function.

5. Hold the MODE button on the on-board control for 3 seconds to enter the Installer Set-up Menu.
6. Navigate through the following screens to set up the dehumidifier for the installed application.
7. Use the UP or DOWN arrows to select items and use MODE to switch to the next set-up option. To exit installer set-up, all options must be scrolled through using the MODE button.
8. After the installer set up options have been completed, DONE will blink for 3 seconds and the control will return to the OFF screen.

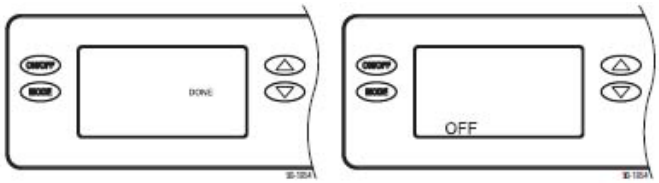

OBC2

Remote Control - Crawl Space/Sealed Attic

If installing in a crawl space or sealed attic with remote control, Enable and press MODE. The installer set-up is complete, proceed to Installer Test Mode section on **page 13**.

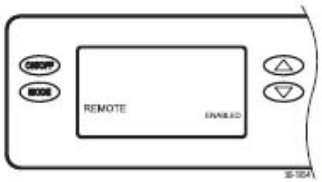

OBC4

If not installing in a crawl space or sealed attic with Model 76C remote control, press MODE to go to VENT screen selections

OBC3

Ventilation

If using the dehumidifier for ventilation, Enable and press MODE to select TIMED or AUTO.

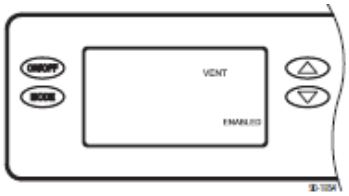

OBC6

If not using the dehumidifier to bring in outdoor air, press MODE to go to ZONE screen selections.

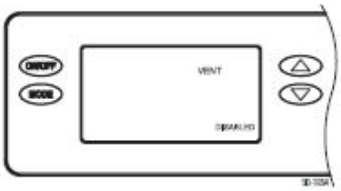

OBC5

If ventilating based on time only (no outdoor temperature restrictions), press MODE at the VENT TIMED screen to go to ventilation time selection screen.

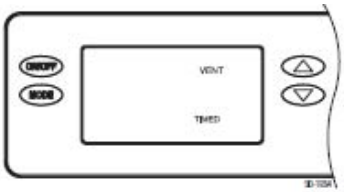

OBC7

If ventilating with outdoor temperature restrictions, use the UP arrow to go from VENT TIMED to VENT AUTO –B and then the UP/DOWN arrows to select the desired ventilation mode, B, C, or D. Press MODE to go to the ventilation time selection screen.

Vent-AUTO-B: Ventilation prevented when outdoor temperature is below 0°F and above 100°F. Between 0°F – 20°F ventilation is only allowed during a HVAC heat call.

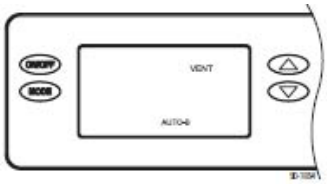

OBC8

Vent-AUTO-C: Ventilation prevented when outdoor temperature is below 0°F and above 100°F.

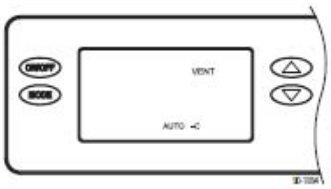

OBC9

Vent-AUTO-D: Ventilation prevented when outdoor temperature is below 0°F and above 90°F. Between 0°F – 40°F ventilation is only allowed during a HVAC heat call.

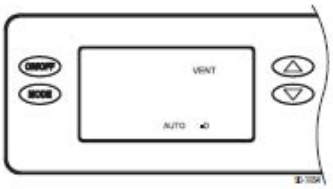

OBC10

Vent-AUTO-B, -C, -D modes apply outdoor temperature limits and require an outdoor temperature sensor to be installed.

Press the UP or DOWN arrows to adjust the ventilation time per hour from 0 to 60 minutes. After selecting time, press MODE to go to the ZONE screen selections.

OBC11

Zone

If installing the dehumidifier in a single zone application, select DISABLED and press MODE to go to the EXTERNAL control screen selections.

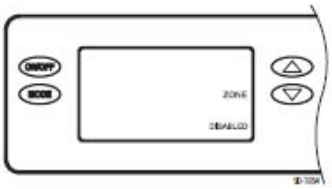

OBC12

If installing the dehumidifier in a two-zone application, use the UP or DOWN arrows to select ENABLED and press MODE to go to the EXTERNAL control screen selections.

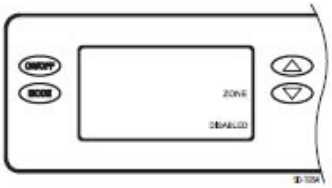

OBC13

External Control

If using the dehumidifier on-board control select DISABLED and press MODE to go to the dehumidification with air conditioning (DEH W/AC) screen selections.

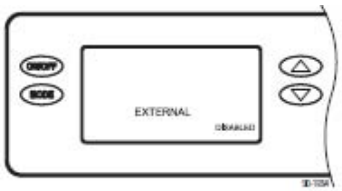

OBC14

If using a Model 76C or other external control, such as a thermostat with dehumidifier outputs, use the UP or DOWN arrows to select ENABLED and press MODE to go to the dehumidification with air conditioning (DEH W/AC) screen selections.

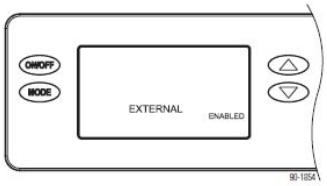

OBC15

DEH W/AC

To allow dehumidification during active air conditioning, select ENABLED and press MODE.

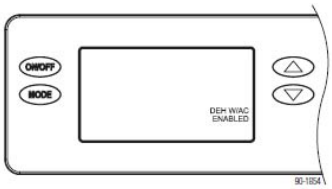

OBC16

To disable dehumidification when the air conditioning is on, select DISABLED and Press MODE.

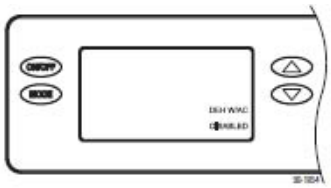

OBC17

RH Offset

An offset can be applied to the on-board humidity reading to avoid discrepancies with other humidity measuring devices in the home. Use the UP/ DOWN arrows to select an offset from -5% to 5%. Press MODE to exit the installer set-up screens.

OBC18

Installer Test Mode

If everything is properly wired, the dehumidifier and all of the wired components will turn on and off during Installer Test Mode to demonstrate that all are properly operating. Installer Test Mode lasts for four (4) minutes. If the ON/OFF button is pressed during test mode, the dehumidifier will exit Installer Test Mode and return to the OFF screen.

Dehumidification Only

If the dehumidifier is not already OFF, press the ON/OFF button to turn it off.

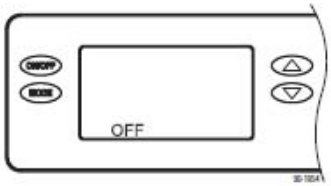

ITM1

Press and hold the ON/OFF button and MODE buttons for 3 seconds. The measured humidity, AIR SAMPLING and TEST will show on the display. If wired to the HVAC system, the HVAC blower will turn on and if there is/are damper(s) wired to the DEH DAMPER terminals of the control, the damper(s) will energize.

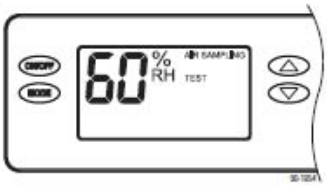

ITM2

After three (3) minutes the dehumidifier compressor will turn on and DEHUMIDIFYING will replace AIR SAMPLING on the control screen.

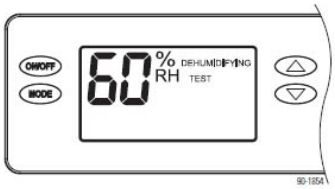

ITM3

After one minute of compressor operation, all outputs will turn off and DONE will blink for 3 seconds and then return to the OFF screen.

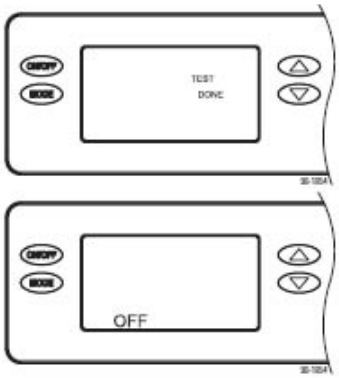

ITM4

Start-Up and Sequence of Operation

Use the ON/OFF Power Switch near the power cord to apply power to the dehumidifier.

Single Zone Whole House Or Stand Alone Using the Dehumidifier Control

1. Press the ON/OFF button to turn the dehumidifier control ON. The display will show the current setting, and the dehumidifier blower and HVAC blower (if wired to the HVAC system) will turn on to start sampling the air.
2. The setting will be replaced by the measured humidity and “AIR SAMPLING” will show on the display.
3. Use the UP or DOWN button to adjust the humidity setting as desired. The recommended initial setting is 59%.
4. After three (3) minutes of sampling, the measured humidity will be compared to the setting:
   a. If the humidity is above the setting, the dehumidifier compressor turns on and “AIR SAMPLING” will be replaced by “DEHUMIDIFYING”. The compressor remains on until the measured humidity falls 3% RH below the setting.
   b. If the measured humidity is below the setting, the blowers turn off and the display returns to showing the RH setting.
5. The dehumidifier will sample again every 60 minutes, or at any time if the humidity setting is lowered.

Crawl Space Or Sealed Attic Remote Control Using Model 76C

1. Press the ON/OFF button to turn the dehumidifier control ON. “REMOTE” will show on the display to indicate that a remote control is wired to the dehumidifier.
2. At the Model 76C, press the ON button; the Model 76C will display the RH measured at the dehumidifier, and the dehumidifier blower will turn on to start sampling the air.
3. Use the UP or DOWN button on the Model 76C to adjust the dryness level as desired. The dryness levels are from 1 to 7, with 1 being least dry and 7 being most dry; the recommended initial setting is 3.
4. After three (3) minutes of sampling, the measured humidity will be compared to the setting:
   a. If the humidity is above the setting, the dehumidifier compressor turns on and “ON” flashes on the Model 76C display.
   b. If the measured humidity is below the setting, the dehumidifier blower turns off.
5. The dehumidifier will sample again every 60 minutes, or at any time if the dryness level is increased.

Crawl Space Or Sealed Attic External Control

1. Press the ON/OFF Button to turn the dehumidifier control ON. The display will show the word EXTERNAL to indicate that an external control is to be used to control the dehumidifier.
2. At the external control, initiate a dehumidification demand. Refer to the literature provided with the external control. The dehumidifier fan and compressor, and the HVAC fan (if wired to do so) will turn on and the word DEHUMIDIFYING will appear on the display of the dehumidifier.

NOTE: When using an external control, there is a three minute delay after power-up (i.e., ON/OFF Power Switch is turned ON with unit plugged in) before the dehumidifier will respond to an external control. This prevents unanticipated, early start-up after power is applied.

3. Discontinue the demand at the external control; the dehumidifier and HVAC fan will turn off.

Two Zone – Primary And Secondary

1. Press the ON/OFF button to turn the dehumidifier control ON. Dehumidification of the Primary Zone follows the same sequence as described to the left for Single Zone, with or without a Model 76C external control installed in the Primary Zone. The dehumidifier control display will show “PRIMARY ZONE” in addition to that described to the left when sampling or dehumidifying the Primary Zone. The zone dampers are energized when sampling or dehumidifying the Primary Zone.
2. The Secondary Zone uses the humidity setting on the dehumidifier control. During Secondary Zone sampling or dehumidification, the zone dampers are de-energized and the HVAC blower (if on) stops. “SECONDARY ZONE” will show on the dehumidifier control display when the Secondary Zone is either sampling or dehumidifying. If the Primary Zone had just finished a dehumidification demand, the compressor will continue to run during Secondary Zone sampling to prevent short cycling of the compressor.

   The Secondary Zone is sampled immediately after the Primary Zone has finished sampling, or if there is a call for dehumidification from the Primary Zone, immediately after the call has been satisfied. When a Model 76C external control is installed, the Secondary Zone will be sampled once per hour if there has not been a call for dehumidification from the Primary Zone. Secondary Zone sampling will also occur whenever the setting on the dehumidifier control is lowered.

Service Instructions

Symbols

Symbol ISO 7010-W021 (2011-05)	Symbol ISO 7000-1659 (2004-01)	Symbol ISO 7000-1659 (2004-01)
Warning: flammable materials	Service indicator: read technical manual	Operator’s Manual: operating instructions

⚠ WARNING

Sealed Refrigeration System is not field serviceable!

- This appliance contains a mildly flammable A2L refrigerant.
- Do not use means to accelerate the defrosting process or to clean, other than those recommended by the manufacturer.
- The appliance shall be stored (when not in use) in a room without continuously operating ignition sources (for example: open flames, an operating gas appliance or operating electric heater).
- Do not pierce or burn sealed system.
- Be aware that refrigerants may not contain odor.

⚠ CAUTION

When connected via air ducts to one or more rooms the appliance shall be directly ducted to the space. Open areas such as false ceilings shall not be used as a return air duct.

Approved Auxiliary Devices

Only approved auxiliary devices approved by the appliance manufacturer shall be installed in the ductwork.

The following checks shall be applied to installations using FLAMMABLE REFRIGERANTS:

- The ventilation machinery and outlets are operating adequately and are not obstructed.
- Marking on the equipment shall be visible and legible. Markings and signs that are illegible shall be corrected.
- When opening the ventilated enclosure for repair of electrical components, be sure to check for refrigerant leaks with a certified flammable refrigerant leak detector.

Repair initial safety checks shall include:

- Servicing the electrical system on the unit should be carried out by a qualified and licensed electrician.
- Disconnect power from the unit (unplug) before attempting service or repair.
- The capacitors are discharged: this shall be done in a safe manner to avoid possibility of sparking; that no live electrical components and wiring are exposed in case of a leak.
- There is continuity of earth bonding.
- Sealed electrical components shall be replaced, not repaired.
- Do not apply any permanent inductive or capacitance loads to the circuit without ensuring that this will not exceed the permissible voltage and current permitted for the equipment in use.
- Intrinsically safe components must be replaced if tripped.

- Replace components only with parts specified by the manufacturer. Other parts may result in the ignition of refrigerant in the atmosphere from a leak.
- Prior to beginning work on systems containing FLAMMABLE REFRIGERANTS, safety checks are necessary to ensure that the risk of ignition is minimized.
- Ensure that the area is in the open or that it is adequately ventilated before removal of the dehumidifier panels for servicing or conducting any hot work in the vicinity of the unit. A degree of ventilation shall continue during the period that the work is carried out. The ventilation should safely disperse any released refrigerant and preferably expel it externally into the atmosphere.
- The refrigeration system is considered factory sealed and puncturing the refrigerant tubing in any way is prohibited.
- Repairing the refrigeration system shall not be performed in the field and must be done at the manufacturing facility by trained personnel.
- Check that cabling will not be subject to wear, corrosion, excessive pressure, vibration, sharp edges, or any other adverse environmental effects. The check shall also consider the effects of aging or continual vibration from sources such as compressors or fans.
- If a leak is suspected, all naked flames shall be removed/extinguished.

Acceptable Leak Detection Methods

- Under no circumstances shall potential sources of ignition be used in the searching for or detection of refrigerant leaks. A halide torch (or any other detector using a naked flame) shall not be used.
- Electronic leak detectors may be used to detect refrigerant leaks but must be calibrated correctly for Flammable Refrigerants. (Detection equipment shall be calibrated in a refrigerant-free area.)
- Ensure that the detector is not a potential source of ignition and is suitable for the refrigerant used.
- Leak detection equipment shall be set at a percentage of the Lower Flammability Limit (LFL) of the refrigerant and shall be calibrated to the refrigerant employed, and the appropriate percentage of gas (25% maximum) is confirmed.
- Leak detection fluids are also suitable for use with most refrigerants but the use of detergents containing chlorine shall be avoided as the chlorine may react with the refrigerant and corrode the copper pipework. Examples of leak detection fluids are:
  - bubble method,
  - fluorescent method agents.

NOTE: The use of silicon sealant can inhibit the effectiveness of some types of leak detection equipment.

Troubleshooting

Table 1 - Diagnostic Codes

When an error occurs, the Diagnostic Code (**Table 1**) along with SERVICE REQUIRED will be displayed on the control screen.

Use the guides on the following pages to identify and correct system faults. Contact Technical Support before replacing the unit or any components and for additional troubleshooting

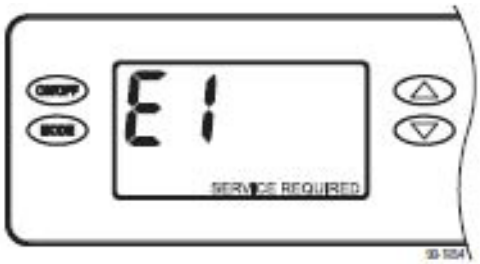

TDC1

NOTICE

Troubleshooting and repair shall be performed by a qualified HVAC service technician and all safety procedures must be followed.

Table 1 – Diagnostic Codes

Diagnostic Code	Failure Mode	Action	Reset
E1	Internal Humidity or Temperature Sensor Open or Shorted	1. Cycle power to clear error code. 2. If error code reoccurs, replace User Interface, Part No. 5492	Cycle Power
E2	High Refrigeration Pressure	1. Verify that the fan works, the backflow damper swings freely, and there is no blocked or restricted ductwork. 2. If the fault persists, call Technical Support.	Cycle Power
E3	Model 76C Remote Control Communication Loss	1. Check connections between Model 76C and dehumidifier control board. Terminals should be fully inserted and secured in the control board and Model 76C control terminals. 2. If connections are correct and secure, turn off the dehumidifier and remove the Model 76C. Use a short section of 4-wire cable to reconnect the Model 76C to the control board. Turn the dehumidifier back on and increase the dryness level setting on the Model 76C. If the dehumidifier turns on, a problem exists with the wiring between the dehumidifier and control. 3. If the dehumidifier does not turn on, call Technical Support.	Self-Correcting

Table 1 – Diagnostic Codes

<table>
<tr><th>Diagnostic Code</th><th>Failure Mode</th><th>Action</th><th>Reset</th></tr>
<tr><td>E4</td><td>Insufficient Capacity</td><td>1. Check the frost sensor connection at the power board. The terminal should be fully seated on the power board pins.
2. Remove the side access panel and verify that the sensor is secured to the suction line.
3. If the sensor is connected and secured to the refrigeration line, proceed to the next step.
4. Reset the fault by cycling power to the dehumidifier.
5. Turn the humidity setting down (below room/home humidity level) to make a dehumidification call.
6. Allow the fan and compressor to run for approximately 10-15 minutes and then enter diagnostic test mode by simultaneously pressing the UP button and MODE button for 3 seconds. The LCD will display:
• the temperature measured by the internal sensor while also displaying the words AIR SAMPLING and ON
• the humidity measured by the internal sensor while also displaying %RH and the word ON
• the frost sensor temperature while also displaying the word ON Scroll through these values and by using the UP or DOWN button.
7. Record values and call Technical Support.</td><td>Cycle Power</td></tr>
<tr><td>E5</td><td>High Temperature Thermistor Failure</td><td>Check the high temperature sensor connection at the power board. The terminal should be fully seated on the power board pins.
Remove the side access panel and verify the sensor is not damaged and connected to the refrigeration line coming from the compressor.
If the sensor is connected and secured to the refrigeration line, it may need to be replaced with Part No. 5484 – contact Technical Support to confirm.</td><td>Cycle Power</td></tr>
<tr><td>E6</td><td>Low Temperature Thermistor Failure</td><td>Check the low temperature sensor connection at the power board.
Remove the side access panel and verify the sensor is not damaged and connected to the suction line.
If the sensor is connected and secured to the refrigeration line, it may need to be replaced with Part No. 5483 – contact Technical Support to confirm.</td><td>Cycle Power</td></tr>
<tr><td>E7</td><td>Float Switch Open</td><td>1. Empty the condensate pan.
2. Check the float switch connection at the control board.
3. If not using a float switch, verify jumper is between float switch terminals on dehumidifier control board.
4. If the problem persists, replace the float switch.</td><td>Self-Correcting</td></tr>
<tr><td>E8</td><td>Inlet Air Temperature Out of 50°F–104°F Range, or Dew Point Below 40°F</td><td>1. Verify all ductwork is properly sealed.
2. Check for air leakage that might affect the temperature or RH of the incoming air.
3. If the air temperature is in range and the dew point is above 40°F, contact Technical Support.</td><td>Self-Correcting</td></tr>
<tr><td>E9</td><td>Outdoor Temperature Sensor Open or Shorted</td><td>1. Check the sensor connection at the power board..
2. Remove the wires from the terminals and measure the
3. resistance. A short circuit will have a resistance very close to 0 Ohms and an open circuit will have a very high resistance. Use this Ohms chart to approximate the resistance based on outdoor temperature.
4. If the sensor is not reading correctly, replace the sensor, Part No. 4401.
<table><tr><th>Outdoor Temperature</th><th>Resistance</th></tr><tr><td>0ºF</td><td>84,500 Ohms</td></tr><tr><td>20ºF</td><td>46,000 Ohms</td></tr><tr><td>40ºF</td><td>26,000 Ohms</td></tr><tr><td>60ºF</td><td>15,500 Ohms</td></tr><tr><td>80ºF</td><td>9,500 Ohms</td></tr><tr><td>100ºF</td><td>6,000 Ohms</td></tr></table></td><td>Self-Correcting</td></tr>
</table>

Table 2 - Troubleshooting Guide

Table 2 – Troubleshooting Guide

Symptom	Possible Reason	Troubleshooting Solution
Dehumidifier does not turn on/run.	No power to unit.	• Check that the dehumidifier is plugged in. • Check that the power switch is turned ON. • Check that the control is turned ON. • Check that the circuit breaker has not tripped.
Dehumidifier blower is running but with little or no airflow.	Pressure drop across dehumidifier is higher than 0.4" WC for Model DEHXXCDA1080AA04 or 0.6" WC for Model DEHXXCDA1100AA04.	• Check dehumidifier air filter and wash or replace. • Check for blocked ductwork and clear. • Verify that the outlet collar with backflow damper is installed on the outlet side of the dehumidifier. • Check if backflow damper is blocked or stuck and remove obstruction.
Dehumidifier blower is running but compressor is not.	Float Switch open (E7 appears on display).	• If float switch is installed, check connections at control board and empty the condensate pan. • If no float switch is installed, check that the jumper is installed at the float switch terminals on the control board.
	Unit is defrosting.	• Frosting occurs when the incoming air is cool and dry, normally during Spring or Fall, or the airflow is restricted. Frosting due to cold/dry conditions is a normal part of operation and “DEFROSTING” will show on the display. If it is not cool and dry, look for blocked ductwork or a dirty filter.
	Inlet air temperature is outside of the 50°F–104°F range or the dew point is below 40°F and there is a demand for dehumidification.	• Verify all ductwork is properly sealed. Dehumidification will restart by itself when the incoming air temperature is within range and the dew point is above 40°F. E8 appears on the display when inlet air conditions prevent operation.
When zoned, the dehumidifier damper does not open in INSTALLER TEST mode.	Incorrect damper wiring or bad connection.	• Verify wiring between dampers and 24 VAC transformer. • If wired for Two Zone operation, verify that 24 VAC transformer is 40 VA minimum. • Check all wiring connections between dampers and control board. • Verify the normally closed dampers are in the Primary Zone ductwork and the normally open dampers are in the Secondary Zone ductwork.
The ventilation damper does not open when the HVAC fan is active.	Cycle time has been met.	• The damper will not open if the ventilation time has already been met.
	ODT error or outdoor air outside of ODT range.	• Check that the ODT is wired correctly to the dehumidifier control board and connections are secure. • Check that the ODT is installed in the outdoor air intake according to the setup specified in ***VENTILATION ON*** page 9. • Remove the ODT leads from the dehumidifier control board and check the resistance. Compare the reading with the chart on the right. Outdoor Temperature / Resistance: 0°F – 84,500 Ohms 20°F – 46,000 Ohms 40°F – 26,000 Ohms 60°F – 15,500 Ohms 80°F – 9,500 Ohms 100°F – 6,000 Ohms
Dehumidifier is not draining properly.	Drain line blocked or unit not level.	• Verify that the unit is level. • Check the drain line blockages and check for a continuous downward slope. • Verify presence and condition of drain cover insert. Clean (Refer to the Owners Manual, Maintenance section) or replace with Part No. 5902 if missing or damaged.
The HVAC fan turns on unexpectedly.	Dehumidifier is sampling or ventilation in progress.	• The dehumidifier will turn on the HVAC fan during air sampling or as needed to meet the ventilation time.
Dehumidifier is producing hot air.	Normal function.	• Air is reheated across the condenser coil, resulting in a temperature rise between inlet and outlet.

Service Parts

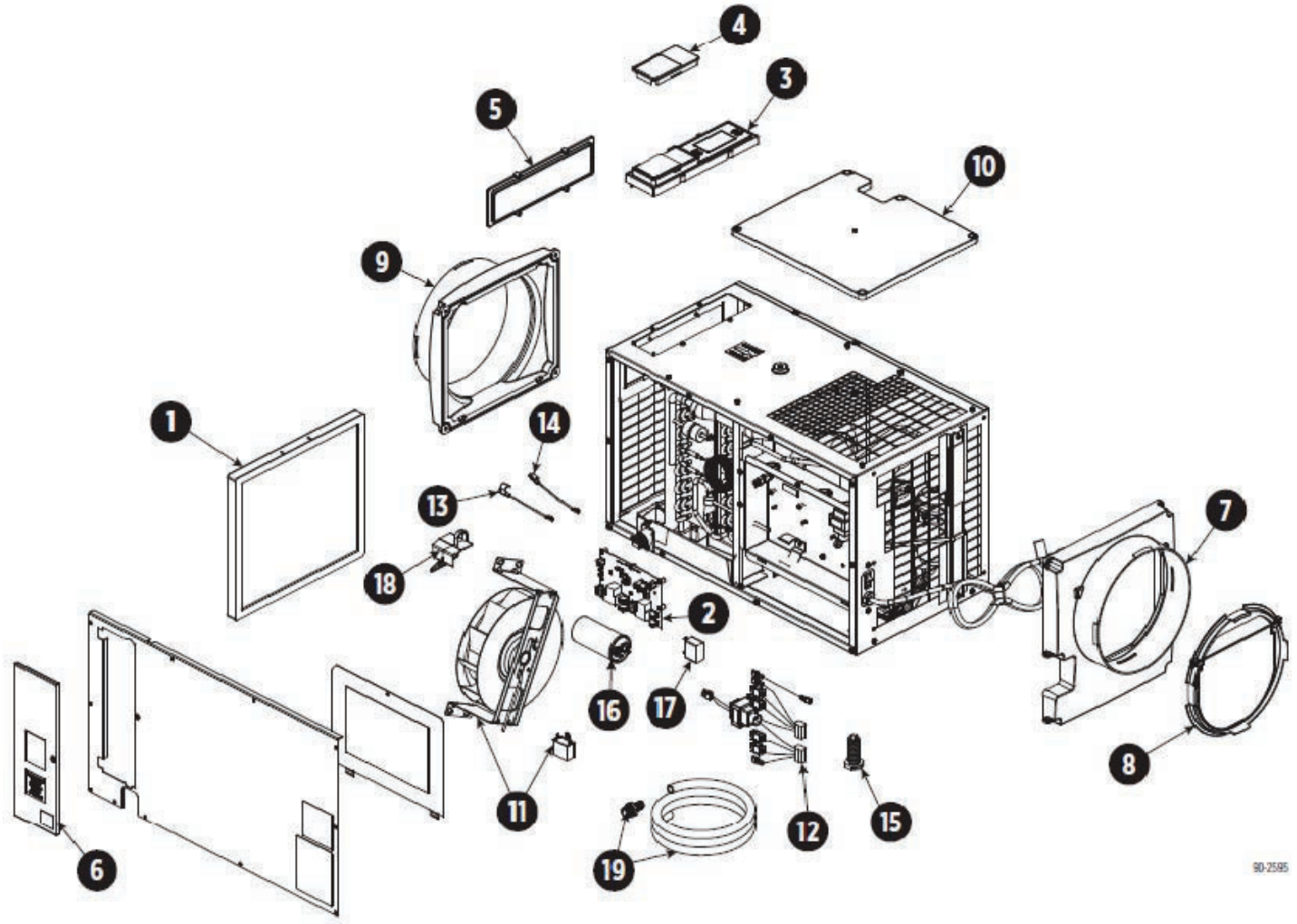

A240078

No.	Part Description	Part No.
1	EZK Filter, 13.5” x 11.875 x 1”	5896
2	Internal Control Board, Deh	5478
3	User Interface Assembly, Deh	5492
4	Wiring Access Door, Deh	5479
5	Hole Cover, UI Ctrl, Deh	5493
6	Door, Filter Access, Deh	5897
7	Outlet Duct Panel, Deh	5495
8	Backflow Damper, 10”, Deh	5480
9	Inlet Duct Panel, Deh	5496
10	Cover, Outlet, Deh	5497
11	Fan, 80pt Deh, with 6MFD Capacitor	5898
	Fan, 100pt Deh, with 12MFD Capacitor	5899
12	Wire Harness, Power, Deh	5901
13	Senor, Low Temperature, Deh	5483
14	Sensor, High Temperature, Deh	5484

No.	Part Description	Part No.
15	Leveling Foot, Deh	5485
16	Capacitor, Run, 50µF	5778
17	Capacitor, 6MFD, 250VAC, 80pt Deh	5583
	Capacitor, 12MFD, 450VAC, 100pt Deh	5491
18	Drain Insert	5902
19	Drain Tube + Fitting	5666
Not Shown		
Remote Wall Control		76C
6” Normally Closed damper		6506C
Outdoor Temperature Sensor, Bracket, and Shield		4401
24 VAC (10VA Min) Transformer		4362
10" Normally Closed Damper		6510C
10" Normally Open Damper		6610C
Zoning Kit, includes: 2 – 6510C Dampers, 2 – 6610C Dampers and a 24VAC (40VA) transformer		KDAZK0101DHM

© 2024 Carrier. All rights reserved.

Manufacturer reserves the right to change, at any time, specifications and designs without notice and without obligations.