40MK*C
Cassette Ductless Split
Sizes 18 to 34

Owner's Manual

TABLE OF CONTENTS

PAGE

A NOTE ABOUT SAFETY 2
GENERAL 2
PART NAMES 3
DISPLAY PANEL 4
REMOTE CONTROL 5
REMOTE CONTROL FUNCTIONS . . . . . 6 - 7
CLEANING, MAINTENANCE AND TROUBLESHOOTING . . . . . 8 - 9

NOTE TO EQUIPMENT OWNER:

Please read this Owner's Information Manual carefully before installing and using this appliance and keep this manual for future reference.

For your convenience, please record the model and serial numbers of your new equipment in the spaces provided. This information, along with the installation data and dealer contact information, will be helpful should your system require maintenance or service.

UNIT INFORMATION

Model # _____

Serial # _____

INSTALLATION INFORMATION

Date Installed _____

DEALERSHIP CONTACT INFORMATION

Company Name: _____

Address: _____

_____

Phone Number: _____

Technician Name: _____

_____

A NOTE ABOUT SAFETY

Any time you see this symbol ⚠ in manuals, instructions and on the unit, be aware of the potential for personal injury. There are three levels of precaution:

DANGER identifies the most serious hazards which will result in severe personal injury or death.

WARNING signifies hazards that could result in personal injury or death.

CAUTION is used to identify unsafe practices which may result in minor personal injury or product and property damage.

NOTE is used to highlight suggestions which will result in enhanced installation, reliability, or operation.

⚠ WARNING

PERSONAL INJURY, DEATH AND / OR PROPERTY DAMAGE HAZARD

Failure to follow this warning could result in personal injury, death or property damage.

Improper installation, adjustment, alteration, service, maintenance, or use can cause explosion, fire, electrical shock, or other conditions which may cause personal injury or property damage. Consult a qualified installer, service agency, or your distributor or branch for information or assistance. The qualified installer or service agency must use factory-authorized kits or accessories when modifying this product.

Read and follow all instructions and warnings, including labels shipped with or attached to unit before operating your new air conditioner.

GENERAL

The cassette type fan coil unit provides quiet, maximum comfort. In addition to cooling and/or heating, the cassette fan coil unit matched with an outdoor condensing unit will filter and dehumidify the air in the room to provide maximum comfort.

IMPORTANT: The cassette fan coil unit should be installed by authorized personnel only; using approved tubing and accessories. If technical assistance, service or repair is needed, contact the installer.

The cassette fan coil unit can be set up and operated from the remote control (provided). **If the remote is misplaced, the system can be operated from the "Auto" setting on the unit.**

Operating Modes:

The cassette fan coil unit has five operating modes.

- Fan only
- Auto
- Heating (heat pump models only)
- Cooling
- Dehumidification (DRY)

Fan Only

In Fan Only mode, the system filters and circulates room air without changing room air temperature.

Auto

In Auto mode, the system automatically cools or heats the room according to the user-selected set point.

Heating

In Heating mode, the system heats and filters room air.

Cooling

In Cooling mode, the system cools, dries and filters room air.

Dehumidification (DRY)

In Dehumidification mode, the system dries, filters and slightly cools room air temperature. This mode prioritizes air dehumidification but it ***does not*** take the place of a dehumidifier.

Remote Control

The remote control transmits commands to set up and operate the system. The control has a window display panel that shows the current system status. The control can be secured to a surface when used with the mounting bracket provided.

PART NAMES

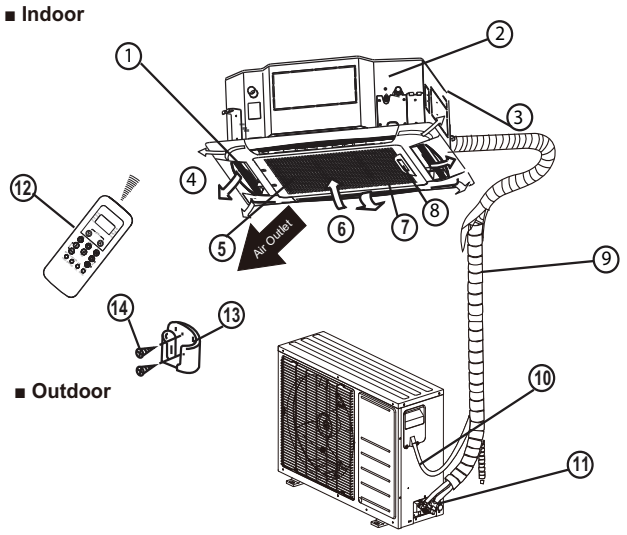

1. Louver
2. Drain Pump
3. Drain Pipe
4. Air outlet
5. Air filter (inside the grille)
6. Air inlet
7. Air inlet grill
8. Display
9. Interconnecting tubing
10. Control wiring to indoor unit
11. Service valves
12. Remote Control
13. Remote Control bracket
14. Self-tapping screws

A150248

Fig. 1 - Indoor/Outdoor Unit

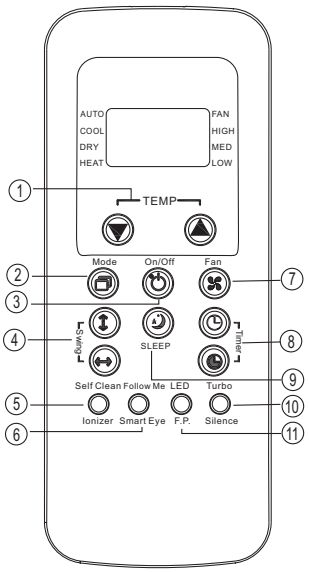

1. Temp Up / Temp Down Buttons
2. Mode Button
3. On/Off Button
4. Horizontal Swing / Vertical Swing Buttons
5. Self Clean / Ionizer
6. Follow Me Button / Smart Eye
7. Fan Button
8. Timer On / Timer Off Buttons
9. Sleep Button
10. Turbo / Silence Button
11. LED / F.P Button

NOTE: Vertical Swing, Self Clean, Ionizer, Smart Eye, Turbo and Silence are not available on this product line.

A14355

Fig. 2 - Remote Control

DISPLAY PANEL

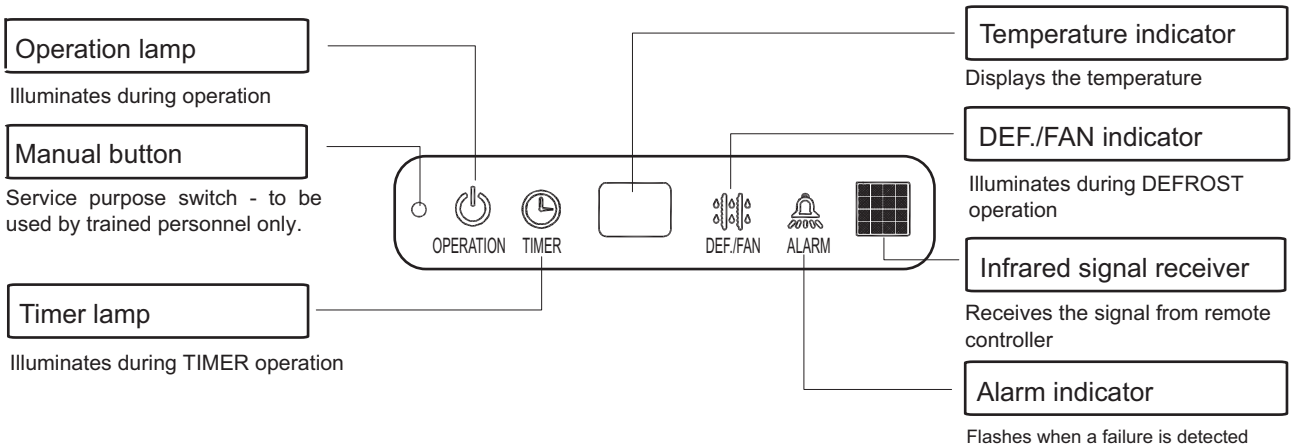

A150257

Fig. 3 - Unit display

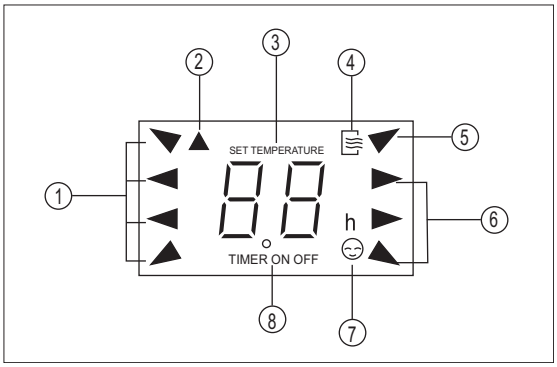

1. **OPERATING MODE DISPLAY**:
   Indicates the current operation mode “AUTO”, “COOL”, “DRY”, “HEAT” (heat pumps only), or “FAN”.
2. **TRANSMISSION INDICATOR**:
   Illuminates when remote control transmits signals to the indoor unit.
3. **TEMPERATURE/TIMER DISPLAY**:
   Temperature setting from 62°F (17°C) to 86°F (30°C) or set times for the timer operation (0~24h) will be displayed. If FAN mode is selected, there will be no temperature displayed.
4. **ON/OFF INDICATOR**:
   This symbol appears when the unit is turned on by the remote control, and disappears when the unit is turned off.
5. **FAN MODE DISPLAY**:
   Indicates when fan mode is selected.
6. **FAN SPEED DISPLAY**:
   Indicates the set fan speed. Nothing is displayed when the mode is set to AUTO or DRY.
7. **FOLLOW ME DISPLAY**:
   This indicator will be displayed when the remote sensing function is activated. This option is not available in DRY and FAN modes.
8. **TIMER DISPLAY**:
   Indicates the timer settings. It displays “TIMER ON” when the auto-on time function is set, “TIMER OFF” when the auto-off time function is set, and “TIMER ON OFF when both functions are set.

NOTE: Symbols shown in this manual are for the purpose of demonstration. During actual operation, only the relevant symbols are displayed.

A14357

Fig. 4 - Remote Control Display

REMOTE CONTROL

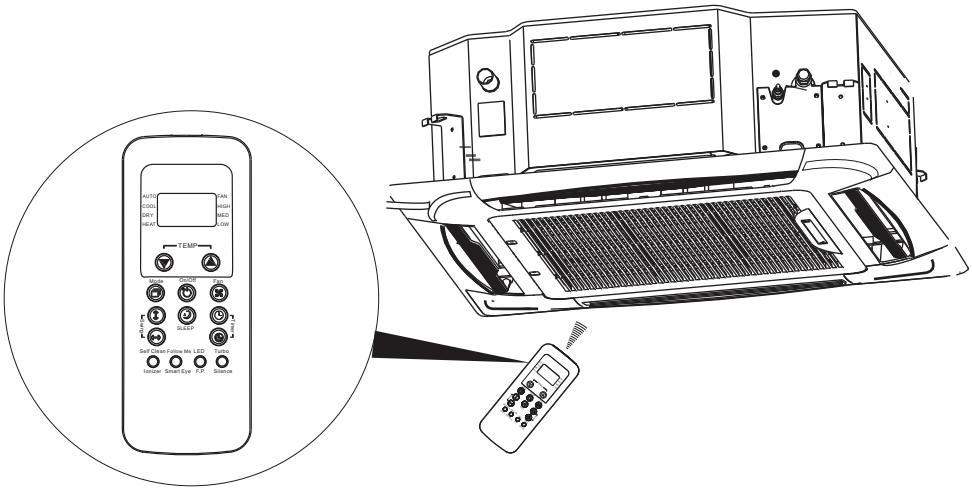

A150253

Fig. 5 - Remote control

⚠ CAUTION

EQUIPMENT DAMAGE HAZARD

Failure to follow this caution may result in equipment damage. Handle the control with care and avoid getting the control wet.

IMPORTANT: The remote control can operate the unit from a distance of up to 25 ft. (7.6 m) as long as there are no obstructions.

When the timer function is used, the remote control should be kept in the vicinity of the fan coil (within 25 ft / 7.6 m).

The remote control can perform the following basic functions:

- Turn the system ON and OFF
- Select operating mode
- Adjust room air temperature set point and fan speed
- Adjust airflow direction

Refer to the *Remote Control Function* section for detailed description of all the capabilities of the remote control.

Battery Installation

Two AAA 1.5 v alkaline batteries (included) are required for operation of the remote control.

To install or replace batteries:

1. Slide the back cover off the control to open the battery compartment.
2. Insert batteries. Follow the polarity markings inside the battery compartment.
3. Replace battery compartment cover.

NOTE:

1. When replacing batteries, do not use old or a different type of battery. This may cause a remote control malfunction.
2. If the remote is not going to be used for several weeks, remove the batteries. Otherwise battery leakage may damage the remote control.
3. The average battery life under normal use is about 6 months.
4. Replace the batteries when there is no audible beep from the indoor unit or if the Transmission Indicator fails to light.
5. When batteries are removed, the remote control erases all programmed settings. The control must be reprogrammed after insertion of new batteries.

Remote Control Operation - Quick Start

NOTE: When transmitting a command from the remote control to the unit, be sure to point the control toward the right side of the unit. The unit confirms receipt of a command by emitting an audible beep.

1. Turn the unit on by pushing the **ON/OFF** button.
2. If there is a preference for °C rather than °F (default), press and hold the increase ▲ and decrease ▼ temperature set point buttons together for approximately 3 seconds.
3. Select the desired mode by pushing the mode button.

Fig. 6 - Mode button options

NOTE: Cool only units have no heat mode.

4. Select the temperature set point by pointing the control toward the unit and pressing the increase/decrease temperature set point buttons until the desired temperature appears on screen.
5. Select the desired fan speed by pressing the **FAN** button.

NOTE: If unit is operating in DRY or AUTO mode, the fan speed will be automatically set.

6. Set the airflow direction. When the unit is turned on, the louvers default to the cooling or heating position. The user can adjust the horizontal louver position by pushing the horizontal swing button or have continuous louver movement by pressing this button for two or more seconds.

Manual Operation

If the remote control is lost, damaged, or the batteries are exhausted, the **MANUAL** button can be used to run the unit. The MANUAL mode needs to be used when the indoor temperature is less than 63°F (17°C), and cooling is being requested. At this temperature the unit cannot be controlled by the remote control.

When the MANUAL button is pressed once, AUTO mode will take place (heat or cool). When this button is pressed twice, the system will enter in TEST mode and run for 30 minutes in the COOLING mode (it will run in the AUTO mode afterward). When it is pressed three times, the system will be turned OFF.

Once an operating mode signal is sent to the indoor unit using the remote controller, the system resumes the normal operation (manual mode would be canceled). If other remote control signals, such as swinging, are sent, the unit will continue its manual operation.

The set conditions of manual operation are as follows:

- Preset set point: 76°F (24°C)
- Fan speed: AUTO
- Discharge air direction: Pre-set position based on operation in "Cool"or "Heat" mode.

REMOTE CONTROL FUNCTIONS

Pressing the On/Off Button

When the air conditioner is not in operation, the remote control will display the last set point and mode.

- Press the On/Off button to start the unit.
  - The unit will start in the last operating mode and set point. The ON/OFF indicator appears.
- Press button On/Off to stop the unit.
  - All indicator lights on the unit will go out, and the remote control will display the set point and mode.

NOTE: If the On/Off button is pressed too soon after a stop, the compressor will not start for 3 to 4 minutes due to the inherent protection against frequent compressor cycling. The unit only emits an audible beep when the signals are received correctly.

Selecting an Operating Mode

Use the Operating Mode button to select an available mode.

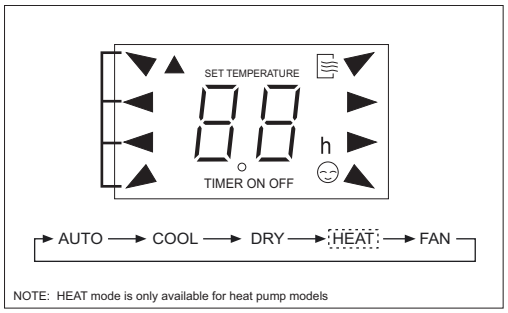

A14360

Fig. 7 - Select an operating mode

Setting the Room Temperature Set Point

Pressing the increase temperature set point ⊛ and decrease ⊛ buttons will raise or lower the temperature.

The unit will confirm signal receipt with a beep and the value of the set temperature on the display will change accordingly.

The temperature can be set between 62°F (17°C) and 86°F (30°C) in increments of 1°F or 1°C.

NOTE: In Cooling mode, if the temperate selected is higher than the room temperature, the unit will not start. The same applies for the Heating mode if the selected temperature is lower than the room temperature.

Selecting the Fan Speed

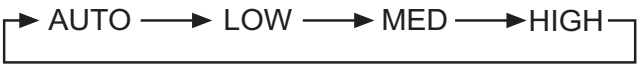

A14362

Fig. 8 - Set fan speed

The fan speed can be selected by pressing the **FAN** button.

NOTE: When the unit is on, the fan will run continuously in cooling or heating. When in heating, there might be situations where the fan will slow down or shut off to prevent cold blow.

Selecting the Horizontal Direction Louver Positions

The horizontal louvers can be adjusted by pressing the horizontal SWING button ⊛ in the remote control and can be set to be stationary or moving continuously. The louver position is stored in the settings, however it is deactivated when the MANUAL settings are set, or when a power interruption occurs.

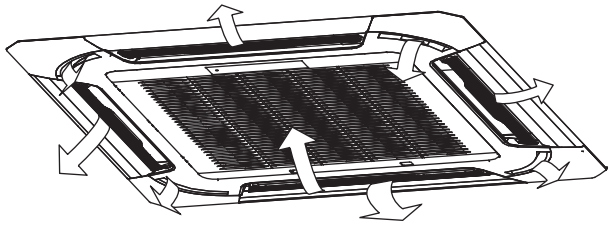

Fig. 9 - Horizontal Louver

Air Direction

Press the horizontal ⊛ swing buttons repeatedly to choose one of the louver positions. Every time this button is pushed, the specific louver swings 6 degrees.

In the Cooling, Dehumidification, and Fan Only modes, the louver will swing in the cooling range. In the Heating mode (for heat pump models), the louver will swing in the heating range.

NOTE: Always use the remote control to adjust the horizontal louver position, otherwise abnormal operation may occur. If the louver is manually adjusted out of its range, power the unit off and then on again.

Auto Swing

For automatic horizontal louver swing, push the horizontal ⊛ swing button for two or more seconds.

Once an operating mode signal is sent to the indoor unit using the remote controller, the system will resume to normal operation (manual mode would be canceled). If other remote control signals, such as swinging, are sent, the unit will continue its manual operation.

Timer Function

TIMER ON (to start the unit) and TIMER OFF (to stop the unit) can be used separately or together.

Timer ON only

This function will allow the unit to start automatically at the set time. The TIMER ON can be set while the unit is on or off.

UNIT ON

- Press the TIMER ON button to initiate the auto-on time sequence. The set time is displayed in the remote control display. Every time the TIMER ON button is pressed, the time will increase by 30 minutes, up to 10 h. It will increase by 60 minutes, afterwards, until the time setting reaches 24 h.
- When the TIMER ON is set, the TIMER light on unit illuminates. The unit will continue to run at the set time.

UNIT OFF

- Set the timer described in the UNIT ON section.
- The unit will start at the set time.

Adjust the TIMER ON settings to 0.0 to cancel this option.

Timer OFF only

This function will allow the unit to stop automatically at the set time. The timer can be set while the unit is on or while it is off.

UNIT ON

- Press the TIMER OFF button to initiate the auto-off time sequence. The set time is displayed in the remote control display. Every time the TIMER OFF button is pressed, the time will increase by 30 minutes, up to 10 h. It will increase by 60 minutes, afterwards, until the time settings reach 24 h.
- When the TIMER OFF is set, the timer light on the unit illuminates and the unit turns off automatically at the set time.

UNIT OFF

- Set the TIMER off as described in the UNIT ON section.
- The TIMER display on the unit illuminates and the unit will remain off.

Adjust the TIMER ON settings to 0.0 to cancel this option.

Timer ON and Timer OFF

Use both functions to program the unit to turn on and shut off at specified times.

UNIT OFF

- Set TIMER ON as previously described.
- Set TIMER OFF as previously described.
- The unit will start automatically at the set TIME ON and will turn off at the set TIME OFF.

UNIT ON

- Set TIME OFF as previously described.
- Set TIME ON as previously described.
- The unit will turn off automatically at the set TIME OFF and will turn on at the set TIME ON.

Sleep Mode

This mode is used to conserve energy and can be used when the unit is in the COOL, HEAT or AUTO mode only.

Cool Mode

- Push the SLEEP button.
- After 1 hour the set point will be raised by 1.8°F (1°C).
- After another hour, the set point will be raised by another 1.8°F (1°C) and the fan will run in low speed.
- The unit will shut off 5 hours after setting the SLEEP mode.
- The SLEEP mode will be cancelled if either the “Mode”, “TEMP”, “Fan”, “Timer”, or “On/Off” buttons on the remote control is pressed.

Heat Mode

- Same as cooling mode but set points will be lowered by 1.8°F (1°C).

Resetting the Remote Control

If the batteries in the remote control are removed, the current settings will be cancelled and the control will return to the initial settings and will be in standby mode. Push the ON/OFF button to activate it.

Time Delay

If the On/Off button is pressed too soon after a stop, the compressor will not start for 3 to 4 minutes due to the inherent protection against frequent compressor cycling. The unit will only emit an audible beep when the signals are received correctly.

Heating Features

If the unit is in the heating mode, there will be a delay when the fan starts. The fan will start only after the coil is warmed up to prevent cold blow.

Auto Defrost Operation

In heating mode, if the outdoor coil is frosted, the outdoor fan will turn off while system removes the frost on the outdoor coil. Indoor fan will continue operating following anti-cold prevention settings.

The system will automatically revert to normal operation when frost is removed from the outdoor unit.

Auto Start

If the power fails while the unit is operating, the unit stores the operating condition, and it will start operation automatically under those conditions when the power is restored.

Follow Me Mode

Press the “Follow Me” button to activate or deactivate this function. Under this setting, the temperature displayed in the remote control is the actual temperature at its location. The remote control will send this signal to the air conditioner every 3 minutes. This function is not available for DRY and FAN modes.

LED/F.P. Mode

Press the LED button to turn the display light on and off. Press the “F.P.” button for approximately 2 seconds to activate or deactivate the freeze protection mode. The indoor unit will display “FP”.

This function is only available in the heating mode for heat pumps. Under this function, the unit will operate at high fan speed and the room temperature will be automatically set to 46°F (8°C).

This mode can also be deactivated by pressing the “On/Off”, “Sleep”, “Mode”, “Fan”, or either “TEMP” buttons.

CLEANING, MAINTENANCE AND TROUBLESHOOTING

⚠ CAUTION

ELECTRICAL SHOCK HAZARD

Failure to follow this caution may result in personal injury or death.
Always turn off power to the system before performing any cleaning or maintenance to the system. Turn off the outdoor disconnect switch located near outdoor unit. Be sure to disconnect indoor unit if on a separate switch

⚠ CAUTION

EQUIPMENT DAMAGE/OPERATION HAZARD

Failure to follow this caution may result in equipment damage or improper unit operation.
Operating the system with dirty air filters may damage the indoor unit and could cause reduced cooling performance, intermittent system operation, frost build-up on indoor coil or blown fuses.

Periodic Maintenance

Periodic maintenance is recommended to ensure proper operation of the unit. Recommended maintenance intervals may vary depending on the installation environment, e.g., dusty zones, etc. Refer to Table 1.

⚠ CAUTION

CUT HAZARD

Failure to follow this caution may result in personal injury.

The coil fins are very sharp. Use caution when cleaning.

Always wear safety protection.

Cleaning the Coil

Clean the coil at the beginning of each cooling season, or when necessary. Use a vacuum cleaner or a long-bristle brush to avoid damage to the coil fins.

Air Filters

Remove and clean the air filters once a month.

NOTE: If air filters show signs of excessive wear or are torn, they must be replaced. Contact your local dealer for replacement filters.

1. Open front panel on unit.
2. Remove filter as shown in the figure below.
3. Vacuum filters.
4. Clean with warm water.
5. Shake filter to remove excess water and dry thoroughly.
6. Replace filter by sliding into rack until filter snaps in place.
7. Close front panel on unit.

- Push the two grille switches simultaneously to open the grille.

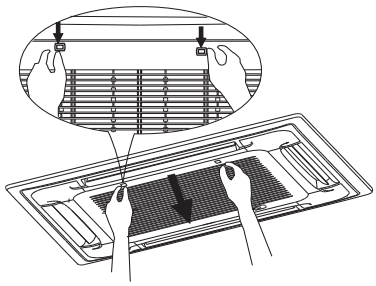

A150259

Fig. 10 - Open the grille

- Disconnect the connecting wire between control box and display board. Then remove the grille and take the filter out.

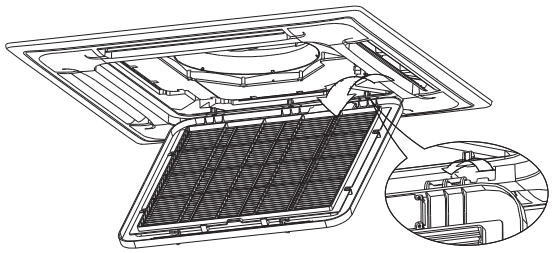

A150260

Fig. 11 - Remove Filter

⚠ CAUTION

EQUIPMENT DAMAGE HAZARD

Failure to follow this caution may result in equipment damage.
When cleaning the front panel, do not use water hotter than 105°F (40.6°C) and do not pour water onto the fan coil. Do not use abrasive or petroleum based cleaners as they may damage the front panel.

Indoor Unit Front Panel

To clean the front panel on the indoor unit, wipe the outside with a soft, dry cloth.

Preparing for Extended Shutdown Period

Clean the filters and reposition them in the unit. Operate the unit in Fan only mode for 12 hours to dry all internal parts. Turn main power supply off and remove batteries from the remote control.

System Operation Recommendations

The items outlined in the following list will help to assure proper system operation:

- Replace both remote control batteries at the same time.
- Point the remote control toward the unit display panel when transmitting a command.
- Keep doors and windows closed while unit is operating.
- Contact an authorized service representative if a problem arises that cannot be easily resolved.
- Do not perform cleaning or maintenance activities while unit is on.
- Keep display panel on unit away from direct sunlight and heat as this may interfere with remote control transmissions.
- Do not block air intakes and outlets on the indoor or outdoor units.

Energy Saving Recommendations

The following recommendations will add greater efficiency to the ductless system:

- Select a comfortable thermostat setting and leave it at chosen setting. Avoid continually raising and lowering the setting.
- Keep filter clean. Frequent cleaning may be necessary depending on indoor air quality.
- Use drapes, curtains or shades to keep direct sunlight from heating room on very hot days.
- Limit run time by using the TIMER function.
- Do not obstruct air intake on front panel.
- Turn on air conditioning before indoor air becomes too uncomfortable.

Troubleshooting

Refer to Table 2 before contacting your local dealer.

Table 1—Periodic Maintenance

INDOOR UNIT	EVERY MONTH	EVERY 6 MONTHS	EVERY YEAR
Clean Air Filter*	•		•
Change Remote Control Batteries		•	
OUTDOOR UNIT	**EVERY MONTH**	**EVERY 6 MONTHS**	**EVERY YEAR**
Clean Outdoor Coil from Outside		•	
Clean Outdoor Coil from Inside†			•
Blow Air Over Electric Parts†			•
Check Electric Connection Tightening†			•
Clean Fan Wheel†			•
Check Fan Tightening†			•
Clean Drain Pans†			•

* Increase frequency in dusty zones.

† Maintenance to be carried out by qualified service personnel. Refer to the Installation Manual

Table 2—Troubleshooting

PROBLEM	POSSIBLE CAUSE	SOLUTION
Unit/System Does Not Work	• The circuit breaker has tripped or a fuse has blown. • Power failure. • Diagnostic lights illuminate.* • Voltage is too low.	• Reset the circuit breaker or replace the fuse with the specified replacement fuse. • Restart operation when the power is restored. • Call your service representative. • Call your service representative.
Cooling is Not Working Properly	• The filter is blocked with dust. • Temperature is not set properly. • A window or door is open. • The outdoor unit is obstructed. • The fan speed is too low. • The operation mode is in Fan instead of Cool.	• Clean the air filter. • Check the temperature and reset if necessary. • Close the window or door. • Remove the obstruction. • Change the fan speed selection. • Change the operating mode to Cool or reset the unit.
Heating is Not Working Properly	• The filter is blocked with dust. • Temperature is set too low. • A window or door is open. • The outdoor unit is obstructed.	• Clean the air filter. • Check the temperature and reset if necessary. • Close the window or door. • Remove the obstruction.
Unit Stops During Operation	• The Off timer is not operating correctly. • Diagnostic lights illuminate.*	• Restart the operating mode. • Call your service representative.

* Diagnostic lights are a combination of lights that will illuminate in the display area on the unit. They are a combination of the lights you see during normal operation.

Copyright 2015 CAC / BDP ● 7310 W. Morris St. ● Indianapolis, IN 46231
Edition Date:06/15

Catalog No:OM40MKCB−C−01

Manufacturer reserves the right to change, at any time, specifications and designs without notice and without obligations.

Replaces: NEW