40MBFQ
Console Ductless System
Sizes 12 to 58

Product Data

Fig. 1 — Size 12K

Fig. 2 — Sizes 18K-58K

NOTE: Images are for illustration purposes **only**. Actual models may differ slightly.

TABLE OF CONTENTS

INDUSTRY LEADING FEATURES / BENEFITS 1
MODEL NUMBER NOMENCLATURE 3
STANDARD FEATURES AND ACCESSORIES 4
DIMENSIONS 5
CLEARANCES 7
SPECIFICATIONS 8
APPLICATION DATA 9
WIRING 10
AIRFLOW DATA 11
SOUND PRESSURE 11
SOUND PRESSURE TESTING METHOD 11
ELECTRICAL DATA 12
FAN AND MOTOR SPECIFICATIONS 12
WIRING DIAGRAMS 13
GUIDE SPECIFICATIONS 18

INDUSTRY LEADING FEATURES / BENEFITS

A PERFECT BALANCE BETWEEN BUDGET LIMITS, ENERGY SAVINGS AND COMFORT

The **40MBFQ** series ductless system are a matched combination of an outdoor condensing unit and an indoor fan coil unit connected only by refrigerant tubing and wires.

The fan coil can be mounted on the floor, against the wall on all the sizes 12-58 and mounted on the ceiling on the sizes 18-58. This selection of fan coils permits creative solutions to design problems such as:

- **Add-ons to current space (an office or family room addition)**
- **Special space requirements**
- **When changes in the load cannot be handled by the existing system**
- **When adding air conditioning to spaces that are heated by hydronic or electric heat and have no ductwork**
- **Historical renovations or any application where preserving the look of the original structure is essential.**

The ideal compliment to your ducted system when it is impractical or prohibitively expensive to use ductwork.

The compact indoor fan coil units take up very little space in the room and do not obstruct windows. The fan coils are attractively styled to blend with most room decors. Advanced system components incorporate innovative technology to provide reliable cooling performance at low sound levels.

LOW SOUND LEVELS

When noise is a concern, the ductless systems are the answer. The indoor units are whisper quiet. There are no compressors indoors, either in the conditioned space or directly over it, and there is none of the noise usually generated by air being forced through ductwork.

SECURE OPERATION

If security is an issue, outdoor and indoor units are connected only by refrigerant piping and wiring to prevent intruders from crawling through ductwork. In addition, since outdoor units can be installed close to an outside wall, coils are protected from vandals and severe weather.

FAST INSTALLATION

This compact ductless system is simple to install. A mounting bracket is standard with the indoor units and only wire and piping need to be run between the indoor and outdoor units. These units are fast and easy to install ensuring minimal disruption to customers in the home or workplace. This makes the ductless systems the equipment of choice, especially in retrofit situations.

SIMPLE SERVICING AND MAINTENANCE

Removing the top panel on the outdoor units provides immediate access to the control compartment, providing a service technician access to check the unit's operation. In addition, the draw-thru design of the outdoor section means that dirt accumulates on the outside surface of the coil. Coils can be cleaned quickly from the inside using a pressure hose and detergent.

On all indoor units, service and maintenance expense is reduced due to easy-to-use cleanable filters. In addition, these console systems have extensive self-diagnostics to assist in troubleshooting.

BUILT-IN RELIABILITY

Ductless system indoor and outdoor units are designed to provide years of trouble-free operation.
The console indoor units include protection against freeze-up and high evaporator temperatures on heat pumps.
The condensing units on heat pumps are protected by a three minute time delay before the compressor starts the over-current protection and the high temperature protection.

INDIVIDUAL ROOM COMFORT

Maximum comfort is provided because each space can be controlled individually based on usage pattern. The air sweep feature provided permits optimal room air mixing to eliminate hot and cold spots for occupant comfort. In addition, year-round comfort can be provided with heat pumps.

ECONOMICAL OPERATION

The ductless system design allows individual room heating or cooling when required. There is no need to run large supply-air fans or chilled water pumps to handle a few spaces with unique load patterns. In addition, because air is moved only in the space required, no energy is wasted moving air through ducts.

EASY-TO-USE CONTROLS

The console units have microprocessor-based controls to provide the ultimate in comfort and efficiency. The user friendly wireless remote control provides the interface between user and the unit.

ACCESSORIES

Customizing these ductless systems to your application is easily accomplished. Adding a condensate pump accessory to the console fan coil provides installation flexibility.

OPTIONAL WIRED CONTROLLER

AGENCY LISTINGS

All systems are listed with AHRI (Air Conditioning, Heating & Refrigeration Institute), and ETL.

Manufacturer reserves the right to change, at any time, specifications and designs without notice and without obligations.

MODEL NUMBER NOMENCLATURE

INDOOR UNIT

40 MB F Q 09 - -- 3

40 = FAN COIL UNIT

MB = MODEL

INDOOR FAN COIL TYPE
F = CONSOLE

SYSTEM TYPE
Q = HEAT PUMP

NOMINAL CAPACITY
12 - 1 TON
24 - 2 TONS
36 - 3 TONS
48 - 4 TONS
58 - 5 TONS

VOLTAGE
3 = 208/230-1-60

NOT USED

NOT USED

Use of the AHRI Certified TM Mark indicates a manufacturer's participation in the program For verification of certification for individual products, go to www.ahridirectory.org.

STANDARD FEATURES AND ACCESSORIES

Ease Of Installation	
Mounting Brackets	S
Low Voltage Controls	S
Floor Mounting Installation (Sizes 12 - 58)	S
Ceiling Installation (Sizes 18 - 58)	S
Comfort Features	
Microprocessor Controls	S
Wired Remote Control	A
Wireless Remote Control	S
Wi-Fi Remote Control (Sizes 18 - 58 Only)	A
Automatic Up-Down Air Sweep	S
Air Direction Control	S
Auto Restart Function	S
Cold Blow Protection On Heat Pumps	S
Freeze Protection Mode On Heat Pumps	S
Turbo Mode	S
Silence Mode	S
Auto Changeover On Heat Pumps	S
Follow Me	S
Energy Saving Features	
Sleep Mode	S
Stop/Start Timer	S
46° F Heating Mode (Heating Setback)	S
Safety And Reliability	
Indoor Coil Freeze Protection	S
Aluminum Golden Hydrophilic pre-coated fins	S
Indoor Coil High Temp Protection in Heating Mode	S
Ease Of Service And Maintenance	
Cleanable Filters	S
Diagnostics	S
Liquid Line Pressure Taps	S
Application Flexibility	
Condensate Pumps	A

Legend

S - Standard
A - Accessory

Accessories

ORDERING NO.	DESCRIPTION	FOR MODELS
53DS-900---118	Condensate Pump (230v)	All Sizes
KSACN0101AAA	Wired Remote Control	All Sizes
KSACN0401AAA	Wired Remote Control 7 Day Programmable compatible with indoor units starting with serial number 0217V10001	Size 12
KSACN0501AAA	Wired Remote Control 7 Day Programmable	Sizes 18 - 58
KSAIF0401AAA	Wi-Fi Kit	Sizes 18 - 58 Only
KSAIC0301230	24V Interface Kit 208/230V	All Sizes*
53DS-900---008	Insulated 25' Line Set - 1/4"x 1/2"	Sizes 12 and 18

NOTE: 24V Interface compatible with all the sizes except sizes 12 and 58. Starting with Serial Number 1419V10001 the sizes 12 and 58 are shipped with the compatible control board.

Indoor Units

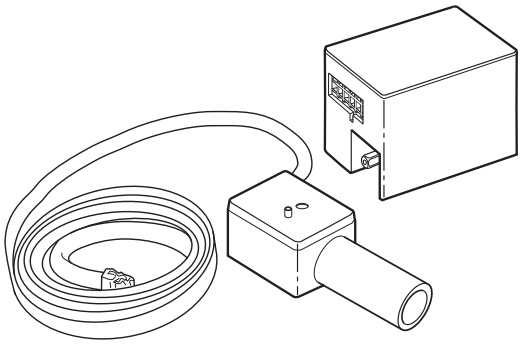

Fig. 3 — Condensate Pump Accessory

On the console fan coils, the condensate pump has a lift capability of 12 ft. (3.6 m) on the discharge side with the pump mounted in the fan coil or 6 ft. (1.8 m) on the suction side if the pump is remote mounted.

The pump is recommended when an adequate drain line pitch cannot be provided, or when the condensate must move up to exit.

DIMENSIONS

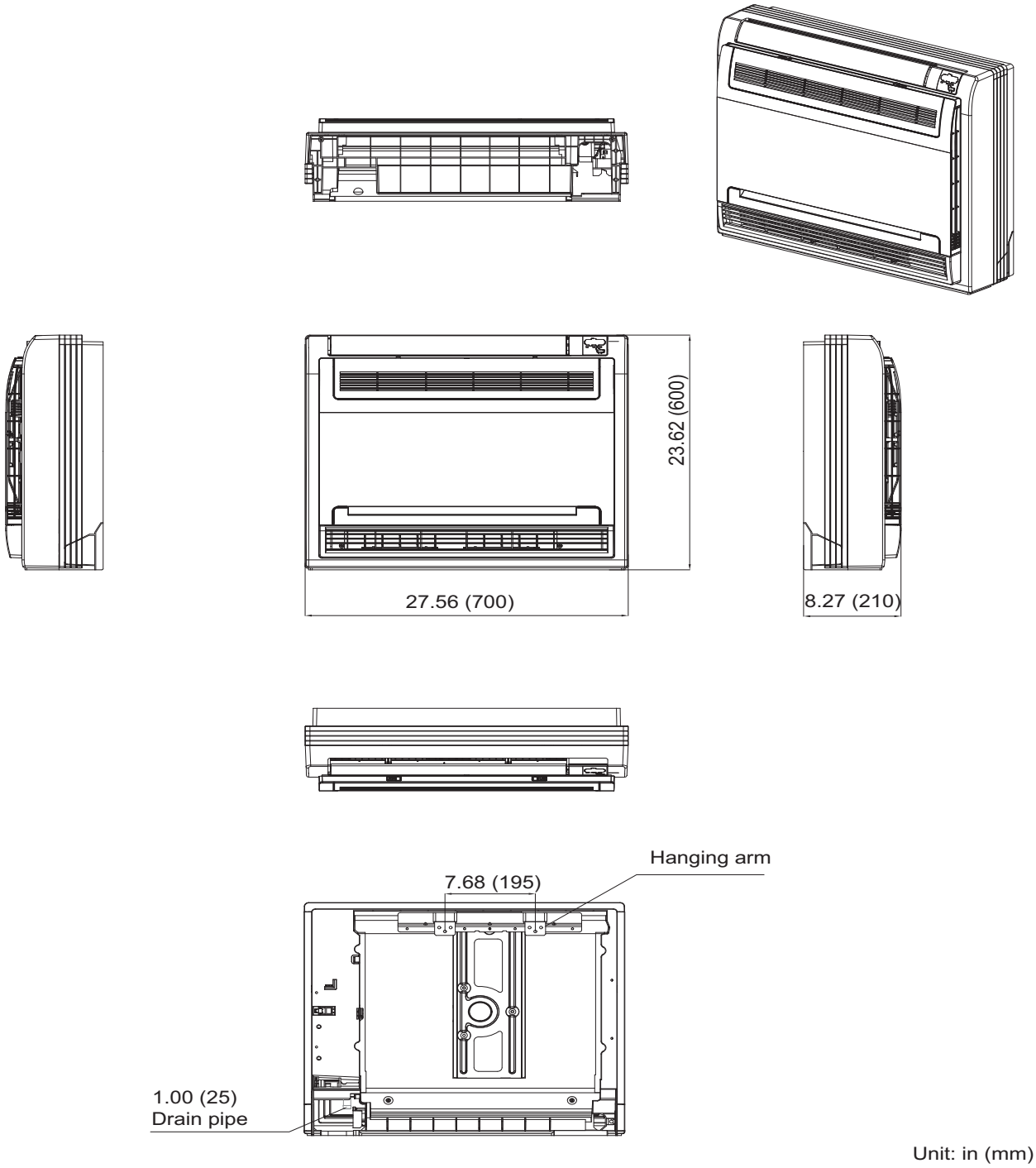

Fig. 4 — Indoor Unit 12K

UNIT SIZE		12K
Depth	**in (mm)**	8.27 (210)
Width	**in (mm)**	27.56 (700)
Height	**in (mm)**	23.62 (600)
Weight-Net	**Lb (kg.)**	32.41 (14.7)

DIMENSIONS (CONT)

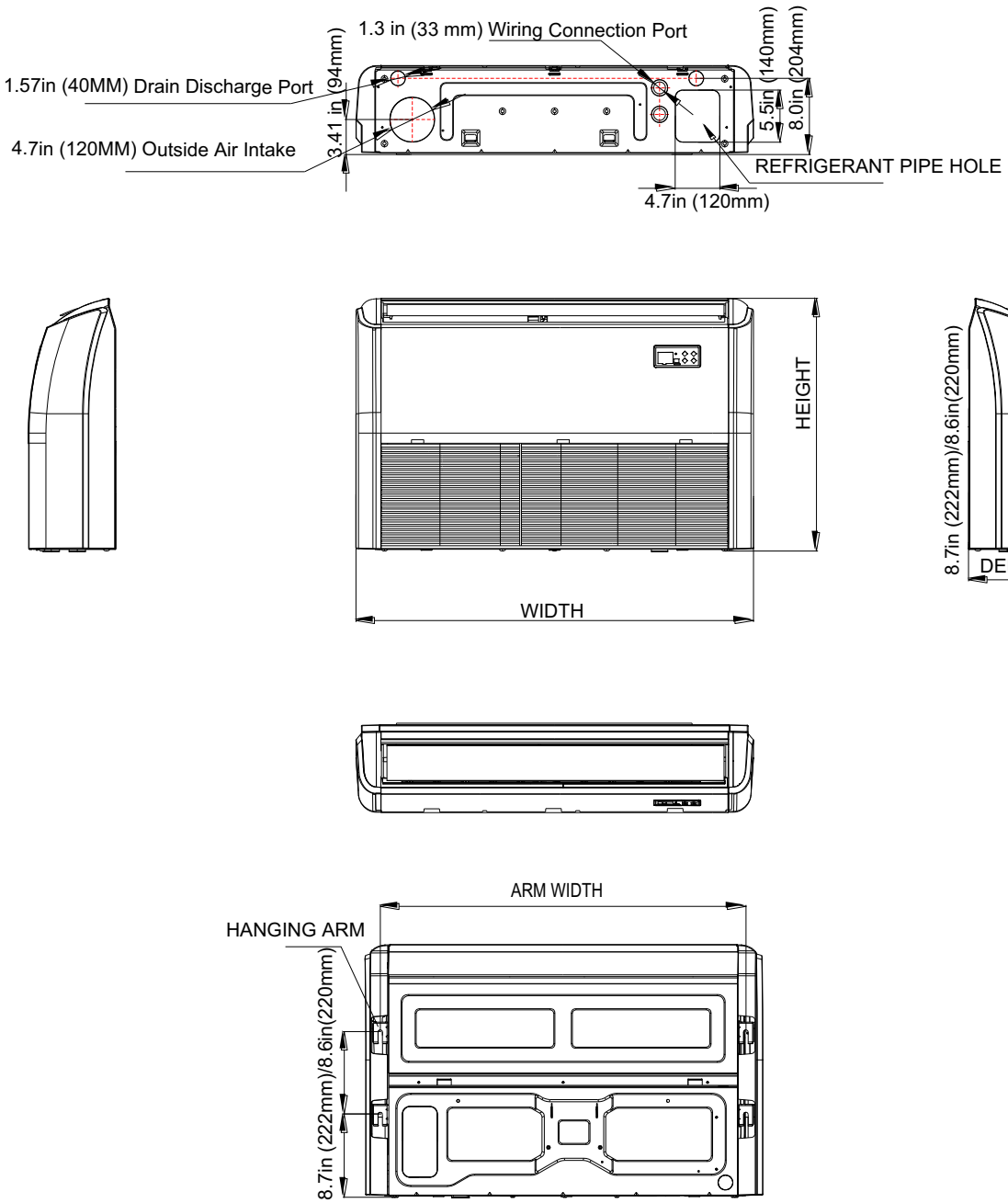

Fig. 5 — Indoor Unit Sizes 18K-58K

UNIT SIZE		18K	24K	36K	48K	58K
Height	in (mm)	9.25 (235)	9.25 (235)	9.25 (235)	9.25 (235)	9.25 (235)
Width	in (mm)	42.05 (1068)	42.05 (1068)	50.59 (1285)	64.96 (1650)	64.96 (1650)
Depth	in (mm)	26.57 (675)	26.57 (675)	26.57 (675)	26.57 (675)	26.57 (675)
Weight- Net	lbs (kg)	55.12 (25)	58.42 (26.5)	69 (31.3)	83.78 (38)	110 (50)
ARM WIDTH	in (mm)	38.7in (983mm)	38.7in (983mm)	47.2in (1200mm)	62in (1565mm)	62in (1565mm)

Manufacturer reserves the right to change, at any time, specifications and designs without notice and without obligations.

CLEARANCES

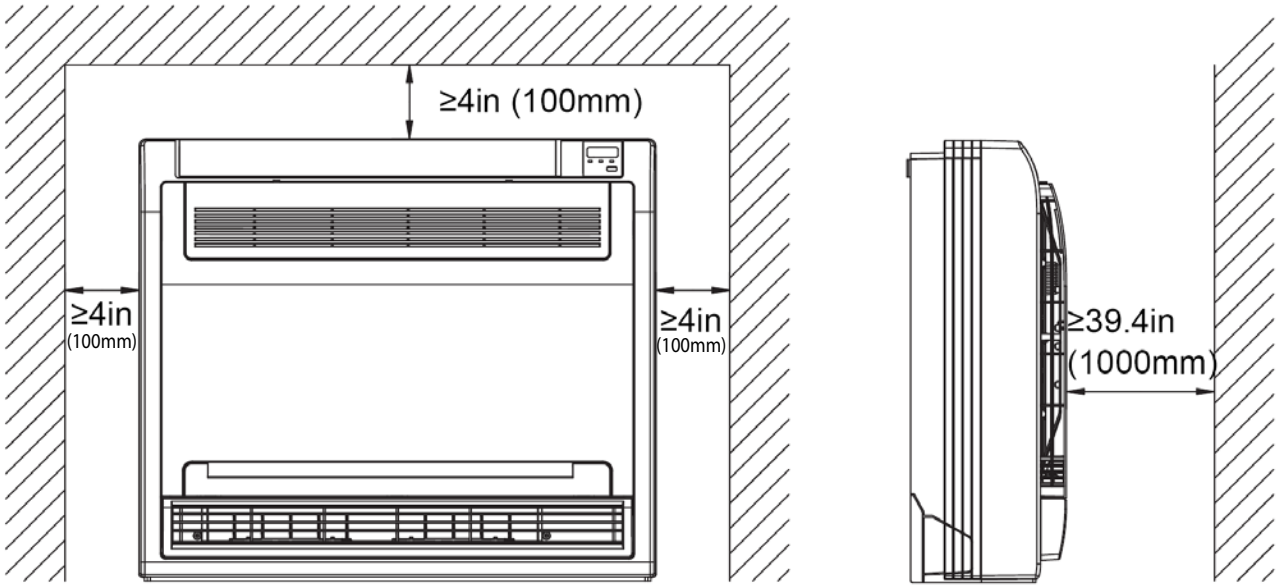

Fig. 6 — Clearance for 12K

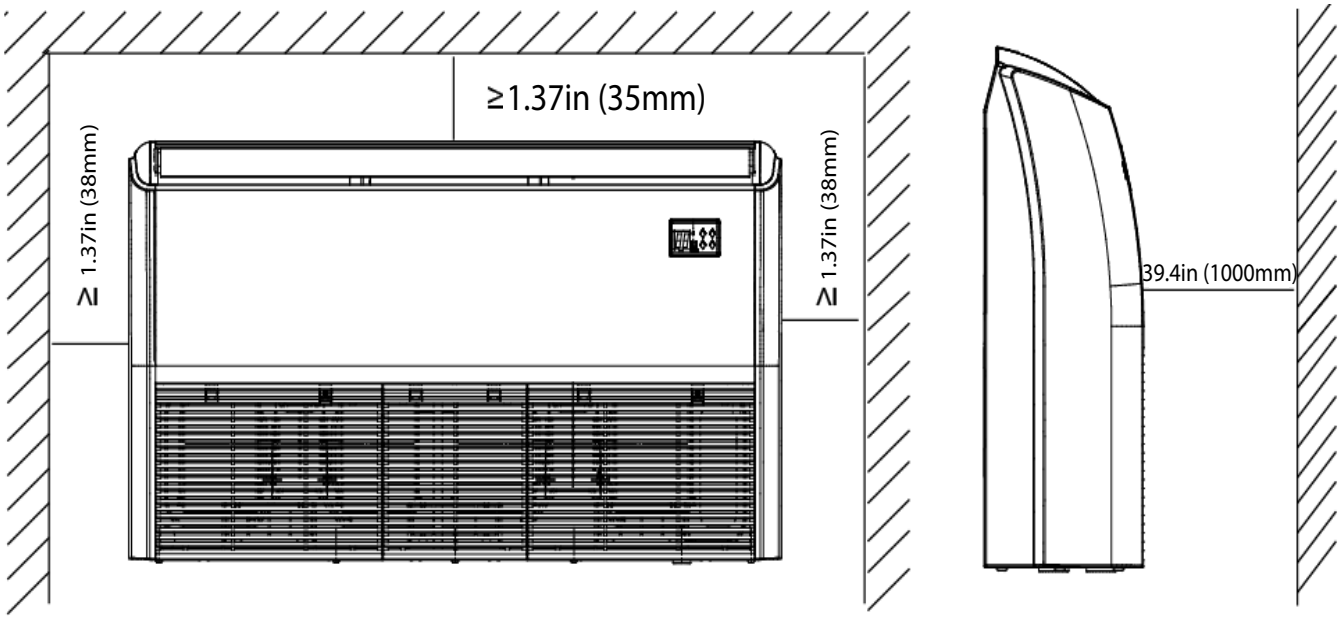

Fig. 7 — Clearance for 18K-24K

SPECIFICATIONS

Heat Pump								
System	**Size**		**12**	**18**	**24**	**36**	**48**	**58**
Electrical	Voltage, Phase, Cycle	V/Ph/Hz	208/230-1-60	208/230-1-60	208/230-1-60	208/230-1-60	208/230-1-60	208/230-1-60
	Power Supply	Indoor unit powered from outdoor unit						
	MCA	A.	0.29	1.0	1.0	1.23	0.85	1.48
Controls	Wireless Remote Controller (°F/°C Convertible)		Standard	Standard	Standard	Standard	Standard	Standard
	Wired Remote Controller (°F/°C Convertible)		Optional	Optional	Optional	Optional	Optional	Optional
Operating Range	Cooling Indoor DB Min - Max	°F (°C)	63~90 (17~32)	63~90 (17~32)	63~90 (17~32)	63~90 (17~32)	63~90 (17~32)	63~90 (17~32)
	Heating Indoor DB Min - Max	°F(°C)	32~86 (0~30)	32~86 (0~30)	32~86 (0~30)	32~86 (0~30)	32~86 (0~30)	32~86 (0~30)
Piping	Pipe Connection Size - Liquid	in (mm)	1/4 (6.35)	1/4 (6.35)	3/8 (9.52)	3/8 (9.52)	3/8 (9.52)	3/8 (9.52)
	Pipe Connection Size - Suction	in (mm)	1/2 (12.7)	1/2 (12.7)	5/8 (16)	5/8 (16)	5/8 (16)	3/4 (19)
Indoor Coil	Face Area (sq. ft)	Sq. Ft.	2.1	2.1	2.5	3.2	4.1	8.1
	No. Rows		2	2	3	3	3	4
	Fins per inch		19	19	19	19	19	19
	Circuits		2	2	7	9	8	12
Indoor	Unit Width	in (mm)	27.56 (700)	42.05 (1068)	42.05 (1068)	50.59 (1285)	64.96 (1650)	64.96 (1650)
	Unit Height	in (mm)	23.62 (600)	26.57 (675)	26.57 (675)	9.25 (235)	9.25 (235)	9.25 (235)
	Unit Depth	in (mm)	8.27 (210)	9.25 (235)	9.25 (235)	26.57 (675)	26.57 (675)	26.57 (675)
	Net Weight	lbs (kg)	32.41 (14.7)	55.12 (25)	58.42 (26.5)	69 (31.3)	83.78 (38)	110 (50)
	No. of Fan Speeds		3	3	3	3	3	3
	Airflow (lowest to highest)	CFM	220/250/280	420/485/550	600/710/760	638/917/1037	1000/1120/1350	796/1029/1385
	Sound Pressure (lowest to highest)	dB(A)	34/41/45	39/44/47	46/50/52	43/49/54	52/54/57	46/49/55
	Air Throw Data	ft (m)	23 (7)	26 (8)	26 (8)	33 (10)	39 (12)	39 (12)
	Moisture Removal	Pint/h (L/h)	2.64 (1.25)	2.96 (1.4)	4.44 (2.1)	8.03 (3.8)	12.05 (5.7)	12.47 (5.9)
	Field Drain Pipe Size O.D.	in (mm)	1 (25.4)	1 (25.4)	1 (25.4)	1 (25.4)	1 (25.4)	1 (25.4)

*Performance may vary based on the compatible outdoor units. See the respective pages for performance data.

NOTE: Backward compatible with 38MAQ, 38MBQ single zone and 38MGQ multi-zone systems
NOTE: See the current compatibility chart for list of indoor unit and outdoor unit match ups.

APPLICATION DATA

Unit Selection

Select equipment to either match or is slightly less than the anticipated peak load. This provides better humidity control, fewer unit cycles, and less part-load operation.

For units used in spaces with high sensible loads, base equipment selection on unit sensible load, not on total anticipated load. Adjust for anticipated room wet bulb temperature to avoid undersizing equipment.

Unit Mounting (Indoor)

Refer to the unit's installation instructions for further details.

Unit leveling - For reliable operation, units should be level in all planes.
Clearance - Provide adequate clearance for airflow (see figures 6 and 7).

Unit location - Select a location which provides the best air circulation for the room.

These units should be positioned on the floor, against the wall for the best air circulation. The unit return and discharge should not be obstructed by furniture, curtains, or anything which may cause unit short cycling or air recirculation. Place the unit in the middle of the selected wall (if possible). Use an outside wall, if available, to make piping easier, and place the unit so it faces the normal location of room occupants.

Unit Mounting (Outdoor)

Refer to the unit's Installation Instructions for further details.
Do not install the indoor or outdoor units in a location with special environmental conditions. For those applications, contact your ductless representative.

Mounting Template

Refer to the unit's Installation Instructions for further details.
The fan coil units are furnished with mounting to mark the location of the wiring, and refrigeration line hole locations.

Support

Adequate support must be provided to support the weight of all the fan coils. Refer to "DIMENSIONS" on page 5 and "SPECIFICATIONS" on page 8 for the fan coil weights, and the base unit dimensional drawings for the mounting brackets location.

System Operating Conditions

Operating Range Min/Max °F (°C)		
	Cooling	Heating
Indoor DB	63 / 90 (17 / 32)	32 / 86 (0 / 30)
Indoor WB	59 / 84 (15 / 29)	

NOTE: Reference the Product Installation Instructions for more information.

Drain Connections

Install drains to meet the local sanitation codes. If adequate gravity drainage cannot be provided, the unit should be equipped with an accessory condensate pump. The console fan coil unit condensate pumps have a maximum lift of 10' (3.05 m). For the drain sizes, see "SPECIFICATIONS" on page 8.

NOTE: Console fan coil units have internal condensate traps. A trap is not required.

Refrigerant Lines

General Refrigerant Line Sizing:

1. The outdoor units are shipped with a full charge of R410A refrigerant.
2. Refrigerant lines should not be buried in the ground. If it is necessary to bury the lines, not more than 36-in (914 mm) should be buried. Provide a minimum 6-in (152 mm) vertical rise to the service valves to prevent refrigerant migration.
3. Both lines must be insulated. Use a minimum of 1/2-in. (12.7 mm) thick insulation. Closed-cell insulation is recommended in all long-line applications.
4. Special consideration should be given to isolating the interconnecting tubing from the building structure. Isolate the tubing so that vibration or noise is not transmitted into the structure.

Manufacturer reserves the right to change, at any time, specifications and designs without notice and without obligations.

WIRING

All wires must be sized per NEC (National Electrical Code) or CEC (Canadian Electrical Code) and local codes. Use Electrical Data table MCA (minimum circuit amps) and MOCP (maximum over current protection) to correctly size the wires and the disconnect fuse or breakers respectively.

Recommended Connection Method for Power and Communication Wiring:

The main power is supplied to the outdoor unit. The field supplied 14/3 stranded wire with ground with a 600 volt insulation rating, power/communication wiring from the outdoor unit to indoor unit consists of four (4) wires and provides the power for the indoor unit. Two wires are line voltage AC power, one is communication wiring (S) and the other is a ground wire. Wiring between indoor and outdoor unit is polarity sensitive. The use of BX wire is **NOT** recommended.

If installed in a high Electromagnetic field (EMF) area and communication issues exists, a 14/2 stranded shielded wire can be used to replace L2 and (S) between outdoor unit and indoor unit landing the shield onto ground in the outdoor unit only.

CAUTION

EQUIPMENT DAMAGE HAZARD

Failure to follow this caution may result in equipment damage or improper operation.

Wires should be sized based on NEC and local codes.

CAUTION

EQUIPMENT DAMAGE HAZARD

Failure to follow this caution may result in equipment damage or improper operation.

Be sure to comply with local codes while running wire from the indoor unit to the outdoor unit.

Every wire must be connected firmly. Loose wiring may cause the terminal to overheat or result in unit malfunction. A fire hazard may also exist. Ensure all wiring is tightly connected.

No wire should touch the refrigerant tubing, compressor or any moving parts.

Disconnecting means must be provided and shall be located within sight and readily accessible from the air conditioner.

CONTROL SYSTEM

The unit is equipped with a microprocessor control to perform two functions:

1. Provide safety for the system
2. Control the system and provide optimum levels of comfort and efficiency.

The main microprocessor is located on the control board of the fan coil unit (outdoor units have a microprocessor too) with thermistors located in the fan coil air inlet and on the indoor coil.
Heat pump units have a thermistor on the outdoor coil. These thermistors monitor the system operation to maintain the unit within acceptable parameters and control the operating mode.

Wireless Remote Control

Fig. 8 — Wireless remote control

1. A wireless remote control is supplied for system operation for system operation of all console units.
2. Each battery operated wireless (infrared) remote control may be used to control more than one unit.

Wired Remote Control (OPTIONAL)

- **KSACN0101AAA (All Sizes)**
- **KSACN0401AAA (Size 12)**
- **KSACN0501AAA (Sizes 18-58)**

1. Optional wired remote controller used for system operation of all console units.
2. Kit includes a wired remote controller and a connecting cable.

NOTE: Extension wire available through RCD (KSACN0101AAA Part Number: 17401204001601; KSACN0401AAA & KSACN0501AAA Part Number: 17401204000769)

3. Connect the wire terminal between the remote controller and the indoor unit.
4. Display in °F or °C and temperature increments every 1°F or every 1°C.

Fig. 9 — KSACN0101AAA (Timer Function)

Fig. 10 — KSACN0401AAA & KSACN0501AAA (7 Day Programmable)

24 INTERFACE

KSAIC0301230 for 208-230V models

Allows the Ductless System to be controlled using a Third Party Thermostat

NOTE: 24V Interface compatible with all the sizes except sizes 12 and 58. Starting with Serial Number 1419V10001 the sizes 12 and 58 are shipped with the compatible control board.

AIRFLOW DATA

SYSTEM SIZE		12K	18K	24K	36K	48K	58K
Indoor (CFM)	High	280	550	760	1,037	1,350	1,385
	Medium	250	485	710	917	1,120	1,029
	Low	220	420	600	638	1,000	796

SOUND PRESSURE

SYSTEM SIZE		12K	18K	24K	36K	48K	58K
Cooling operation Indoor Sound Pressure	dBa (L/M/H)	34/41/45	39/44/47	46/50/52	43/49/54	52/54/57	46/49/55
Heating operation Indoor Sound Pressure	dBa (L/M/H)	34/41/45	37.8/41.3/44.4	41.4/46.1/50.2	43.3/46.5/49.6	42.3/49.6/53.4	38/44/51

SOUND PRESSURE TESTING METHOD

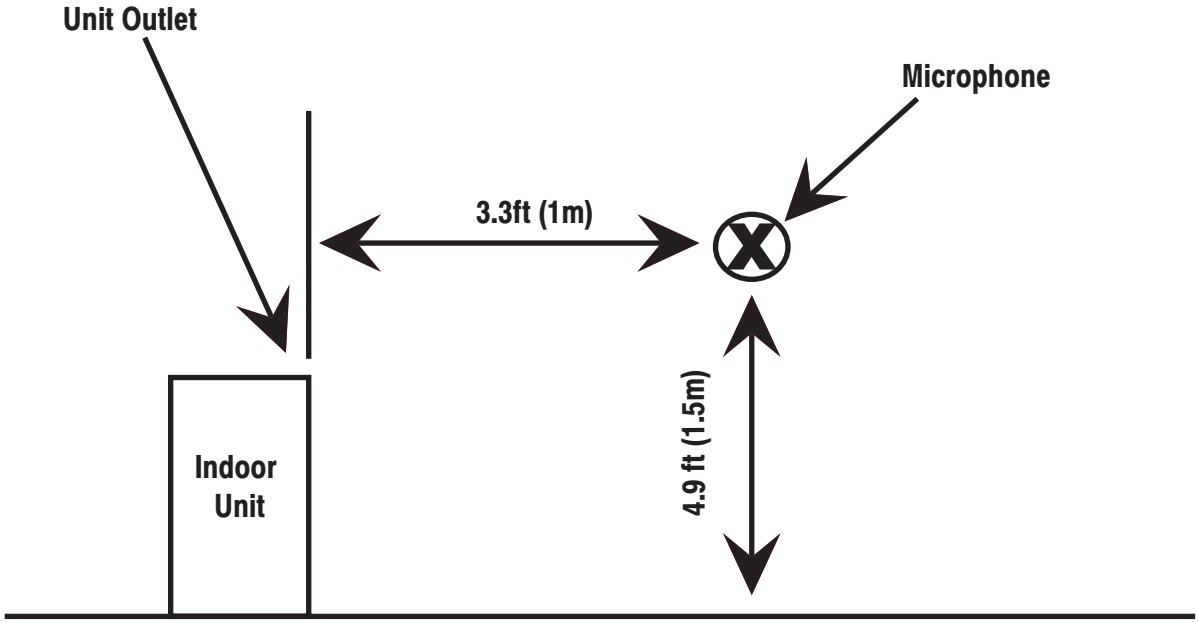

Fig. 11 — Sound Pressure Testing Method

ELECTRICAL DATA

Console Size		12K	18K	24K	36K	48K	58K
		(208/230V)	(208/230V)	(208/230V)	(208/230V)	(208/230V)	(208/230V)
FLA		0.21	1.11	1.11	1.36	0.94	1.2
Input	W	66.6	100	100	130	98	210
Rated HP	HP	0.027	0.075	0.075	0.156	0.122	0.218

*Permissible limits of the voltage range at which the unit will operate satisfactorily.

LEGEND

FLA - Full Load Amps

FAN AND MOTOR SPECIFICATIONS

SYSTEM SIZE			12K	18K	24K	36K	48K	58K
			(208-230V)	(208-230V)	(208-230V)	(208-230V)	(208-230V)	(208-230V)
Indoor Fan	material		AS	ABS	ABS	ABS	ABS	ABS
	Type		LX-370*80* 8-7JN	LX-154*162* 12-41J	LX-154*162* 12-41J	LX-154*162* 12-41J	LX-154*162* 12-41J	LX-154*162* 12-41J
	Diameter	inch	14.6	0.51 (154)	0.51 (154)	0.51 (154)	0.51 (154)	0.51 (154)
	Height	inch	3.15	0.53 (162)	0.53 (162)	0.53 (162)	0.53 (162)	0.53 (162)
Indoor Fan Motor	Model		RD-280-20-8A	ZKFN-55-8-1	ZKFN-55-8-1	ZKFN-115-8-1	ZKFN-90-8-1	ZKFN-160-8-1-2
	Type		DC	DC	DC	DC	DC	DC
	Phase		3	3	3	3	3	3
	FLA		0.21	1.11	1.11	1.36	0.94	1.2
	Insulation class		E	E	E	E	E	E
	Safe class		IPX0	IPX0	IPX0	IPX0	IPX0	IPX0
	Input	W	66.6	100	100	130	98	210
	Output	W	20	55	55	115	90*	160
	Range of current	Amps	0.21±10%	1±10%	1±10%	1.23±10%	0.85±10%	1.48±10%
	Rated current	Amps	0.21	1	1	1.23	0.85	1.48
	Rated HP	HP	0.027	0.075	0.075	0.156	0.122	0.218
	Speed	rev/min	730/680/580/520	950/850/750	950/850/750	1300/1150/800	1320/1200/1120	1350/1050/850
	Rated RPM	rev/min	1062	1300	1300	1350	1350	1350
	Max. input	W	66.6	130	130	150	98	155

Manufacturer reserves the right to change, at any time, specifications and designs without notice and without obligations.

WIRING DIAGRAMS

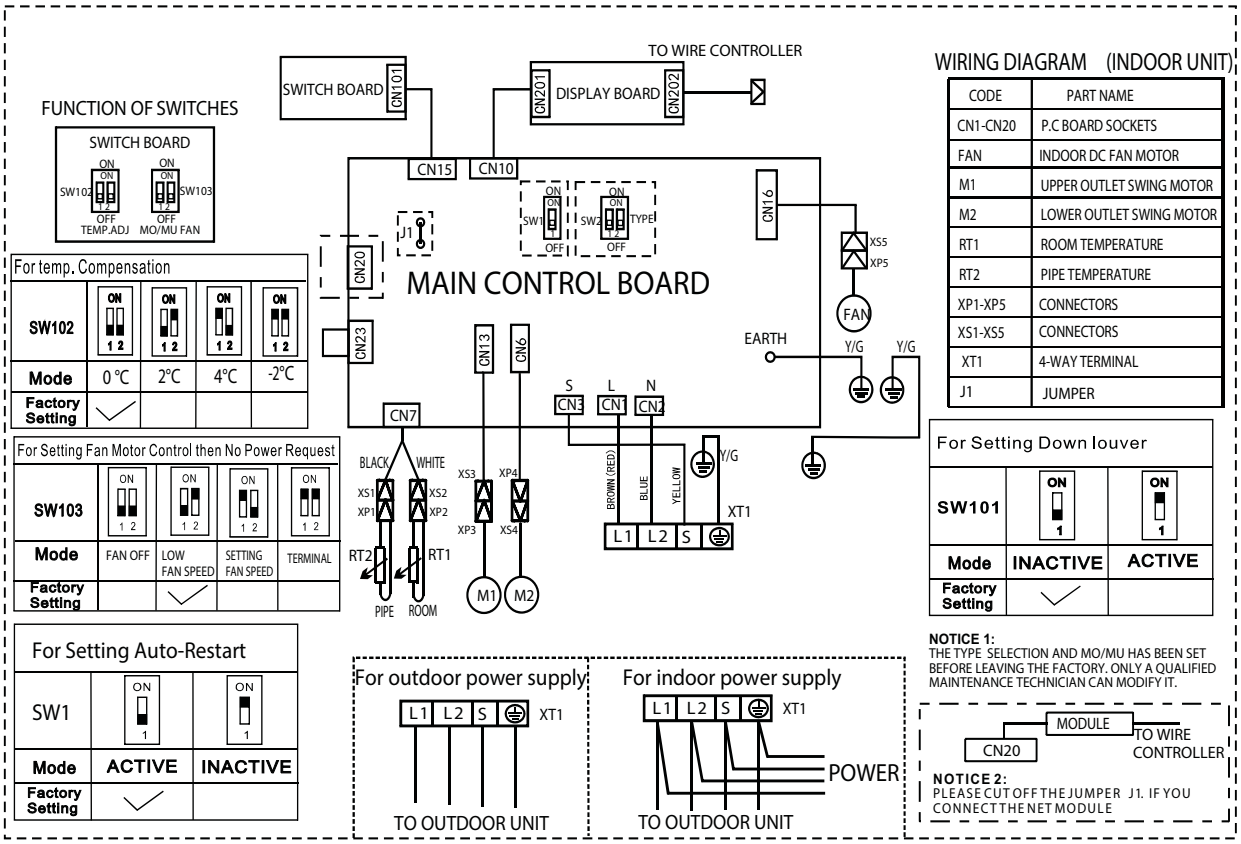

Fig. 12 — Wiring Diagram Size 12

Indoor Unit Control Board

CODE	PART NAME
CN1	Input: 230VAC High voltage Connection of the terminal
CN2	Input: 230VAC High voltage Connection of the terminal
CN3	Output: 24VDC Between CN2 Connection of the S signal
CN6	Output: 12VDC Connection of the Lower outlet swing motor
CN7	Output: 5VDC Connection of the Room and Pipe temperature
CN10	Output: 12VDC Connection of the Display board
CN13	Output: 12VDC Connection of the Upper outlet swing motor
CN15	Output: 1-5VDC Connection of the Switch board
CN16	Output: 320VDC Connection of the Fan high voltage
CN20	Output: 5VDC Connection of the Net module
CN23	Output: 1-12VDC Connection of the Remote switch

WIRING DIAGRAMS (CONT)

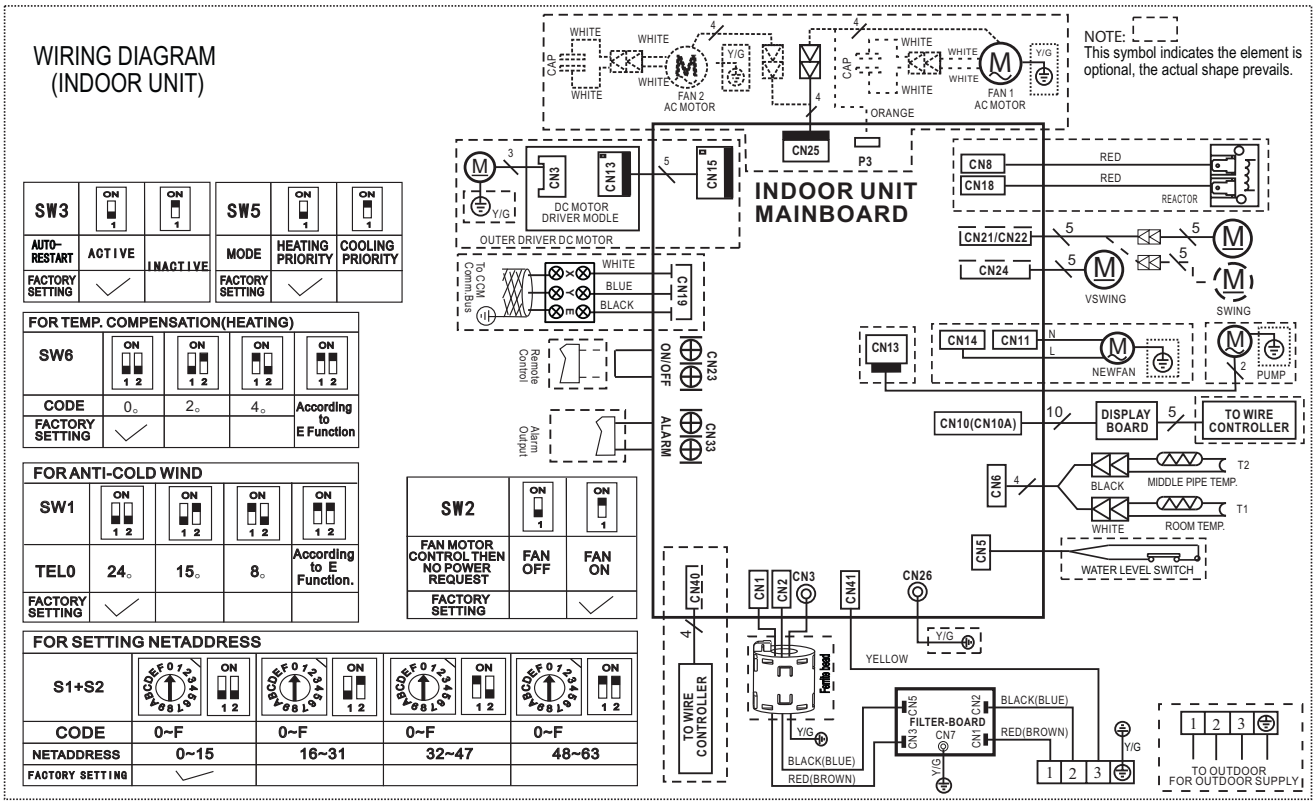

Fig. 13 — Wiring Diagram - Sizes 18K and 24K

Indoor Unit Control Board

INDOOR UNIT	
CODE	**PART NAME**
CN1	Input: 230VAC High voltage connection of the terminal
CN2	Input: 230VAC High voltage connection of the terminal
CN3/CN26	Output: 0VDC Connection of the earth
CN5	Output: 0-5VDC Connection of the water level switch
CN6	Output: 5VDC Connection of the room and pipe temperature
CN8/CN18	Output: 320VDC High voltage connection of the reactor
CN10 (CN10A)	Output: 12VDC Connection of the display board
CN11/CN14	Output: 230VAC High voltage connection of the new fan
CN13	Output: 220VAC High voltage connection of the pump
CN15	Output: 320VDC High voltage connection of the fan board
CN19	Output: 5VDC Connection of the CCM
CN21/CN22	Output 12VDC connection to the swing motor
CN23	Output: 1-12VDC Connection of the remote switch
CN24	Output 12VDC connection to the swing motor
CN33	Output 0V connection of the alarm
CN40	Output 12VDC connection of the wire controller
CN41	Output 24VDC between CN2 connection of the S signal

WIRING DIAGRAMS (CONT)

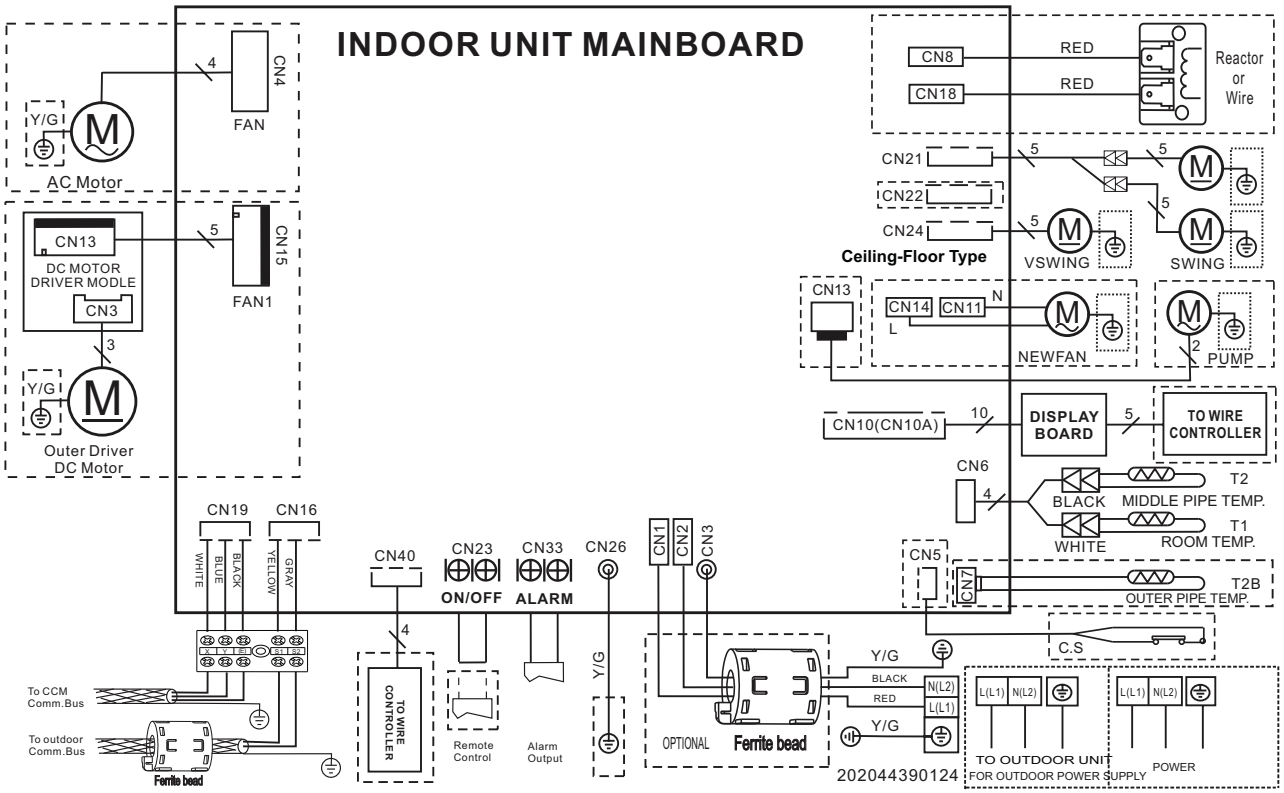

Fig. 14 — Wiring Diagram - Size 36K

Indoor Unit Control Board

INDOOR UNIT	
CODE	**PART NAME**
CN1	Input: 230VAC High voltage connection of the terminal
CN2	Input: 230VAC High voltage connection of the terminal
CN3/CN26	Output: 0VDC Connection of the earth
CN5	Output: 0-5VDC Connection of the water level switch
CN6	Output: 5VDC Connection of the room and pipe temperature
CN8/CN18	Output: 320VDC High voltage connection of the reactor
CN10 (CN10A)	Output: 12VDC Connection of the display board
CN11/CN14	Output: 230VAC High voltage connection of the new fan
CN13	Output: 220VAC High voltage connection of the pump
CN15	Output: 320VDC High voltage connection of the fan board
CN19	Output: 5VDC Connection of the CCM
CN21/CN22	Output 12VDC connection to the swing motor
CN23	Output: 1-12VDC Connection of the remote switch
CN24	Output 12VDC connection to the swing motor
CN28	Output 24VDC between CN2 connection of the S signal
CN33	Output 0V connection of the alarm
CN40	Output 12VDC connection of the wire controller

WIRING DIAGRAMS (CONT)

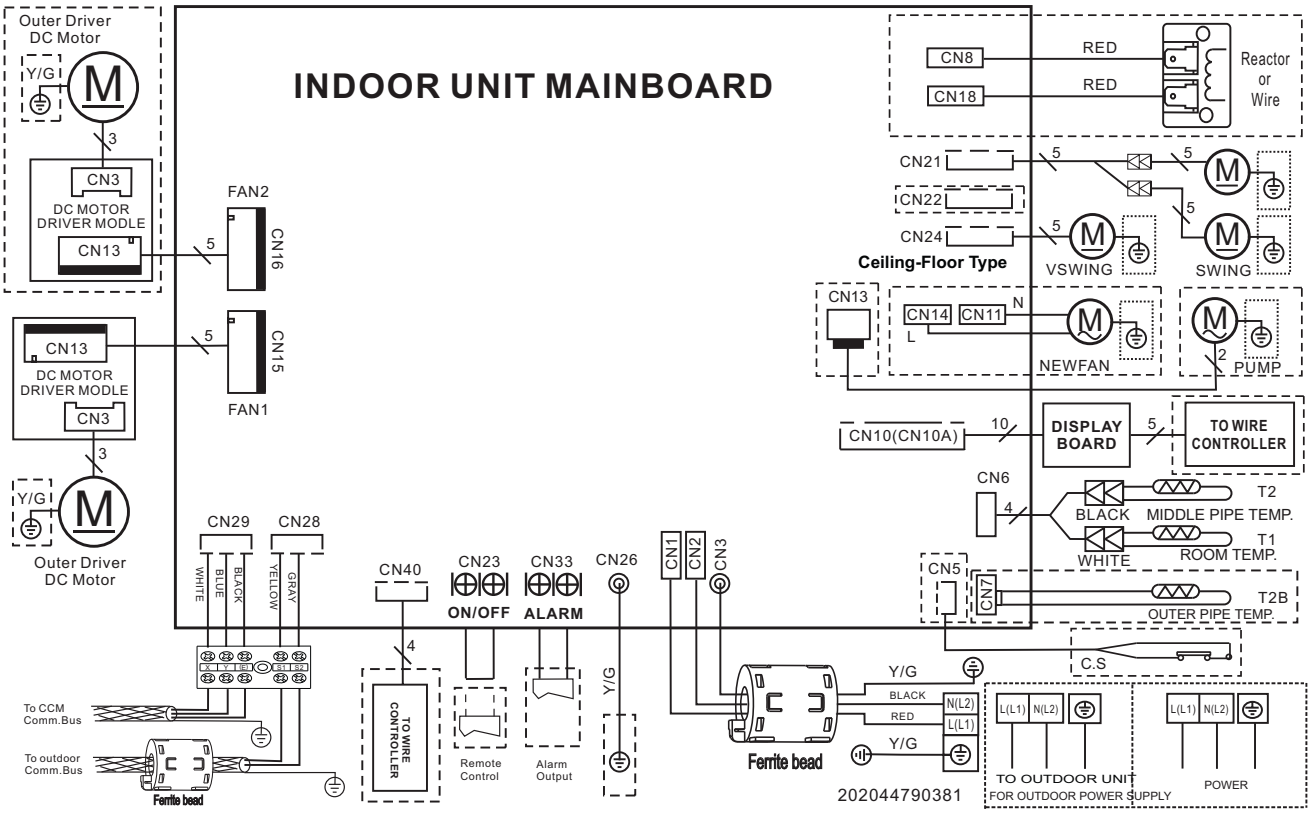

Fig. 15 — Wiring Diagram - Size 48K

Indoor Unit Control Board

INDOOR UNIT	
CODE	**PART NAME**
CN1	Input: 230VAC High voltage connection of the terminal
CN2	Input: 230VAC High voltage connection of the terminal
CN3/CN26	Output: 0VDC Connection of the earth
CN5	Output: 0-5VDC Connection of the water level switch
CN6	Output: 5VDC Connection of the room and pipe temperature
CN7	Output 5VDC connection of the indoor coil outlet temperature sensor T2B
CN8/CN18	Output: 320VDC High voltage connection of the reactor
CN10 (CN10A)	Output: 12VDC Connection of the display board
CN11/CN14	Output: 230VAC High voltage connection of the new fan
CN13	Output: 220VAC High voltage connection of the pump
CN15/CN16	Output: 320VDC High voltage connection of the fan board
CN21/CN22	Output 12VDC connection to the swing motor
CN23	Output: 1-12VDC Connection of the remote switch
CN24	Output 12VDC connection to the swing motor
CN29	Output: 5VDC Connection of the CCM
CN33	Output 0V connection of the alarm
CN40	Output 12VDC connection of the wire controller
CN41	Output 24VDC between CN2 connection of the S signal

WIRING DIAGRAMS (CONT)

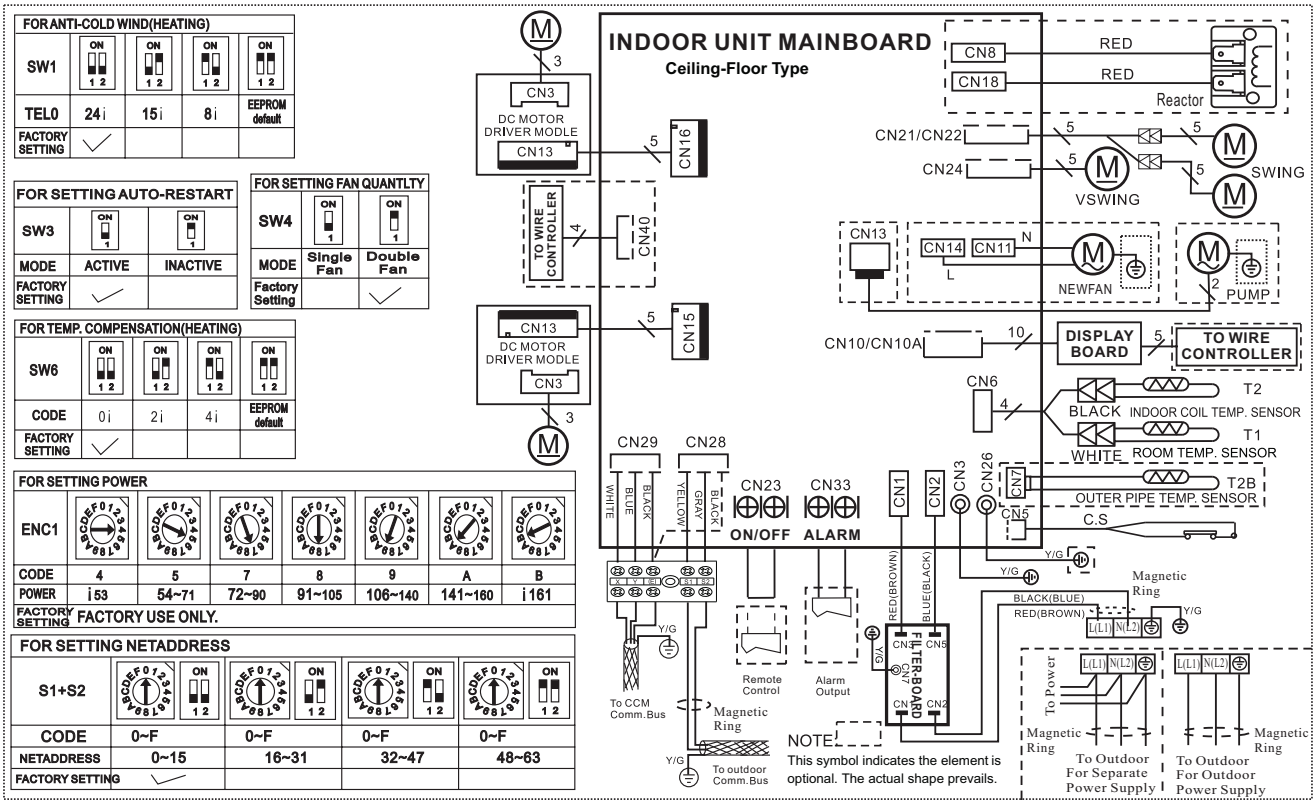

Fig. 16 — Wiring Diagram - Size 58K

Indoor Unit Control Board

INDOOR UNIT	
CODE	**PART NAME**
CN1	Input: 230VAC High voltage connection of the terminal
CN2	Input: 230VAC High voltage connection of the terminal
CN3/CN26	Output: 0VDC Connection of the earth
CN5	Output: 0-5VDC Connection of the water level switch
CN6	Output: 5VDC Connection of the room and pipe temperature
CN7	Output 5VDC connection of the indoor coil outlet temperature sensor T2B
CN8/CN18	Output: 320VDC High voltage connection of the reactor
CN10 (CN10A)	Output: 12VDC Connection of the display board
CN11/CN14	Output: 230VAC High voltage connection of the new fan
CN13	Output: 220VAC High voltage connection of the pump
CN15/CN16	Output: 320VDC High voltage connection of the fan board
CN21/CN22	Output 12VDC connection to the swing motor
CN23	Output: 1-12VDC Connection of the remote switch
CN24	Output 12VDC connection to the swing motor
CN28	Output 24VDC between CN2 connection of the S signal
CN29	Output: 5VDC Connection of the CCM
CN33	Output 0V connection of the alarm
CN40	Output 12VDC connection of the wire controller

Part 1 - GENERAL

1.01 System Description

Indoor console, direct-expansion fan coils are matched with a cooling only or heat pump outdoor unit.

1.02 Agency Listings

Unit is rated per AHRI Standards 210/240 and listed in the AHRI directory as a matched system.

GUIDE SPECIFICATIONS
INDOOR CONSOLE DUCTLESS UNITS
Size Range: 1 to 5 Ton Nominal Cooling and Heating Capacity Model Number:**40MBFQ**

1.03 Delivery, Storage, And Handling

Units are stored and handled per the unit manufacturer's recommendations.

1.04 Warranty (For Inclusion By Specifying Engineer)

Part 2 - PRODUCTS

2.01 Equipment

A. General:

Indoor, direct-expansion, floor-mounted fan coil. Unit is complete with a cooling/heating coil, fan, fan motor, piping connectors, electrical controls, microprocessor control system, and integral temperature sensing. Unit is furnished with an integral mounting bracket and mounting hardware.

B. Unit Cabinet:

Cabinet discharge and inlet grilles are attractively styled, high-impact polystyrene. Cabinet is fully insulated for improved thermal and acoustic performance.

C. Fans:

1. Fan is the tangential direct-drive blower type with an air intake in the center of the unit and discharge at the top and bottom front. An automatic, motor-driven vertical air sweep is provided standard.
2. Air sweep operation is user selectable. The vertical sweep may be adjusted (using the remote control) and the horizontal air direction may be set manually.

D. Coil:

Coil is a copper tube with aluminum fins and galvanized steel tube sheets. Fins are bonded to the tubes by mechanical expansion and specially golden hydrophilic pre-coated for enhanced wet-ability. A drip pan under the coil has a drain connection for hose attachment to remove condensate. The condensate pan has an internal trap.

E. Motors:

The motors have an open drip-proof, permanently lubricated ball bearing with inherent overload protection. The fan motors are 4-speed.

F. Controls:

Controls consist of a microprocessor-based control system which controls the space temperature, determines the optimum fan speed, and runs self diagnostics. The temperature control ranges from 62°F to 86°F (17°C to 30°C) in increments of 1°F or 1°C, and have 46°F Heating Mode (Heating Setback). The wireless remote controller has the ability to act as the temperature sensing location for room comfort.

The unit has the following functions as a minimum:

1. An automatic restart after power failure at the same operating conditions as at failure.
2. A timer function to provide a minimum 24-hour timer cycle for system Auto Start/Stop.
3. Temperature-sensing controls to sense the return air temperature.
4. Indoor coil freeze protection.
5. Wireless infrared remote control to enter set points and operating conditions.
6. Automatic air sweep control to provide on or off activation of air sweep louvers.
7. Dehumidification mode to provide increased latent removal capability by modulating system operation and set point temperature.
8. Fan-only operation to provide room air circulation when no cooling is required.
9. Diagnostics to conduct continuous checks of unit operation and warn of possible malfunctions. Error messages appear on the unit.
10. Fan speed control is user-selectable: high, medium, low, or microprocessor controlled automatic operation during all operating modes.
11. Automatic heating-to-cooling changeover in heat pump mode. Control includes a deadband to prevent rapid mode cycling between heating and cooling.
12. Indoor coil high temperature protection is provided to detect excessive indoor discharge temperature when the unit is in heat pump mode.

G. Filters:

Unit has a filter track with factory-supplied cleanable filters.

H. Electrical Requirements:

Indoor fan motor to operate on 208-230V as specified. Power is supplied from the outdoor unit.

I. Operating Characteristics:

The 40MBFQ system has a minimum SEER (Seasonal Energy Efficiency Ratio) and HSPF at AHRI conditions, as listed on the specifications table.

J. Refrigerant Lines:

All units should have refrigerant lines that can be oriented to connect from the left, right or back of unit. Both refrigerant lines need to be insulated.

K. Special Features (Field Installed):

Condensate Pump:

The condensate pump removes condensate from the drain pan when gravity drainage cannot be used. The pump is designed for quiet operation. The pump consists of two parts: an internal reservoir/sensor assembly, and a remote sound-shielded pump assembly. A liquid level sensor in the reservoir stops the cooling operation if the liquid level in the reservoir is unacceptable.

© 2022 Carrier. All rights reserved.

Manufacturer reserves the right to change, at any time, specifications and designs without notice and without obligations.