24ANB6
Infinity® Air Conditioner with Puron® Refrigerant
1–1/2 to 5 Nominal Tons (Size 18–60)

Carrier
turn to the experts

Product Data

INFINITY SERIES

Carrier's Air Conditioners with Puron® refrigerant provide a collection of features unmatched by any other family of equipment. The 24ANB6 has been designed utilizing Carrier's Puron refrigerant. The environmentally sound refrigerant allows you to make a responsible decision in the protection of the earth's ozone layer.

This product has been designed and manufactured to meet Energy Star® criteria for energy efficiency when matched with appropriate coil components. Refer to the combination ratings in the Product Data for system combinations that meet Energy Star® guidelines.

NOTE: **Ratings contained in this document are subject to change at any time. Always refer to the AHRI directory (www.ahridirectory.org) for the most up-to-date ratings information.**

INDUSTRY LEADING FEATURES / BENEFITS

Efficiency

- 14 - 16 SEER / 11.0- 13.5 EER
- Microtube Technology™ refrigeration system
- Indoor air quality accessories available

Sound

- Sound level as low as 66 dBA
- Quiet mount split post compressor grommets
- Forward-swept condenser fan blade
- Compressor sound hood
- Laminated steel compressor mounting plate
- 8 pole PSC ball bearing outdoor condenser fan motor

Comfort

- System supports Infinity Control or standard thermostat controls

Reliability

- Puron® refrigerant - environmentally sound, won't deplete the ozone layer and low lifetime servce cost.
- Scroll compressor
- Internal pressure relief valve
- Internal thermal overload
- Filter drier
- High and low pressure switches
- Balanced refrigeration system for maximum reliability

Durability

WeatherArmor™ protection package:

- Solid, durable sheet metal construction
- Louvered coil guard
- Baked-on, complete outer coverage, powder paint

Applications

- Long-line - up to 250 feet (76.20 m) total equivalent length, up to 200 feet (60.96 m) condenser above evaporator, or up to 80 ft. (24.38 m) evaporator above condenser (See Longline Guide for more information.)
- Low ambient (down to -20°F/-28.9°C)) with accessory kit

MODEL NUMBER NOMENCLATURE

1	2	3	4	5	6	7	8	9	10	11	12	13
N	N	A	A	A/N	N	N	N	A/N	A/N	A/N	N	N
2	4	A	N	B	6	2	4	A	0	0	3	0
Product Series		Product Family	Tier	Major Series	SEER	Cooling Capacity		Variations	Open	Open	Voltage	Minor Series
24=AC		A=RES AC	N=Infinity Series	B=Puron	6=16 SEER (Nominal)			A=Standard	0=Not Defined	0=Not Defined	3=208/230–1	0, 1, 2...

Puron™ the environmentally sound refrigerant

AHRI CERTIFIED™ www.ahridirectory.org

Use of the AHRI Certified TM Mark indicates a manufacturer's participation in the program For verification of certification for individual products, go to www.ahridirectory.org.

Certified System™ ISO 9001 QMI-SAI Global

c UL US

IdealHumidity

ENERGY STAR

This product has been designed and manufactured to meet Energy Star® criteria for energy efficiency when matched with appropriate coil components. However, proper refrigerant charge and proper air flow are critical to achieve rated capacity and efficiency. Installation of this product should follow all manufacturing refrigerant charging and air flow instructions. **Failure to confirm proper charge and air flow may reduce energy efficiency and shorten equipment life.**

24ANB6

STANDARD FEATURES

Feature	18	24	30	36	42	48	60
Puron Refrigerant	X	X	X	X	X	X	X
Maximum SEER *	16.0	16.0	16.5	16.5	16.0	16.0	16.0
Scroll Compressor	X	X	X	X	X	X	X
Field Installed Filter Drier	X	X	X	X	X	X	X
Front Seating Service Valves	X	X	X	X	X	X	X
Internal Pressure Relief Valve	X	X	X	X	X	X	X
Internal Thermal Overload	X	X	X	X	X	X	X
Long Line capability	X	X	X	X	X	X	X
Low Ambient capability with Kit	X	X	X	X	X	X	X
High Pressure Switch	X	X	X	X	X	X	X
Low Pressure Switch	X	X	X	X	X	X	X
Compressor Sound Blanket	X	X	X	X	X	X	X
Louvered Coil Guard	X	X	X	X	X	X	X

*Based on tested combinations

X = Standard

PHYSICAL DATA

UNIT SIZE SERIES	18–30	24–30	30–30	36–30	42–30	48–30	60–30
Operating Weight lb (Kg)	184 (83)	186 (84)	193 (88)	209 (95)	261 (118)	303 (137)	334 (151)
Shipping Weight lb (Kg)	217 (98)	219 (99)	227 (103)	250 (113)	303 (137)	346 (157)	380 (172)
Compressor Type	Scroll						
REFRIGERANT	R–410A						
Control	TXV (R–410A Hard Shutoff)						
Charge lb (Kg)	5.25 (2.38)	6.00 (2.72)	6.81 (3.09)	7.00 (3.18)	8.62 (3.91)	13.00 (5.9)	14.50 (6.58)
COND FAN	Propeller Type, Direct Drive						
Air Discharge	Vertical						
Air Qty (CFM)	2233	2614	2614	3223	3810	4046	4046
Motor HP	1/12	1/10	1/10	1/12	1/5	1/4	1/4
Motor RPM	800	800	800	800	800	800	800
COND COIL							
Face Area (Sq ft)	15.07	15.07	17.22	17.58	25.12	25.12	30.14
Fins per In.	25	25	25	25	25	20	20
Rows	1	1	1	1	1	2	2
Circuits	3	4	4	4	6	7	8
VALVE CONNECT. (In. ID)							
Vapor	3/4	3/4	3/4	7/8	7/8	7/8	7/8
Liquid	3/8	3/8	3/8	3/8	3/8	3/8	3/8
REFRIGERANT TUBES (In. OD)							
Rated Vapor*	3/4			7/8			1–1/8
Max Liquid Line	3/8"						

*Units are rated with 25 ft (7.6 m) of lineset length. See *Vapor Line Sizing and Cooling Capacity Loss* table when using other sizes and lengths of lineset.

NOTE: See unit Installation Instruction for proper installation.

REFRIGERANT PIPING LENGTH LIMITATIONS

Liquid Line Sizing and Maximum Total Equivalent Lengths† for Cooling Only Systems with Puron® Refrigerant:

The maximum allowable length of a residential split system depends on the liquid line diameter and vertical separation between indoor and outdoor units.

See Table below for liquid line sizing and maximum lengths :

Maximum Total Equivalent Length
Outdoor Unit BELOW Indoor Unit

Size	Liquid Line Connection	Liquid Line Diam. w/ TXV	AC with Puron Refrigerant Maximum Total Equivalent Length†: Outdoor unit BELOW Indoor Vertical Separation ft (m)								
			0–5 (0–1.5)	6–10 (1.8–3.0)	11–20 (3.4–6.1)	21–30 (6.4–9.1)	31–40 (9.4–12.2)	41–50 (12.5–15.2)	51–60 (15.5–18.3)	61–70 (18.6–21.3)	71–80 (21.6–24.4)
018 AC with Puron	3/8	1/4	150	150	125	100	100	75	– –	– –	– –
		5/16	250*	250*	250*	250*	250*	250*	250*	225*	150
		3/8	250*	250*	250*	250*	250*	250*	250*	250*	250*
024 AC with Puron	3/8	1/4	75	75	75	50	50	– –	– –	– –	– –
		5/16	250*	250*	250*	250*	250*	225*	175	125	100
		3/8	250*	250*	250*	250*	250*	250*	250*	250*	250*
030 AC with Puron	3/8	1/4	30	– –	– –	– –	– –	– –	– –	– –	– –
		5/16	175	225*	200	175	125	100	75	– –	– –
		3/8	250*	250*	250*	250*	250*	250*	250*	250*	250*
036 AC with Puron	3/8	5/16	175	150	150	100	100	100	75	– –	– –
		3//8	250*	250*	250*	250*	250*	250*	250*	250*	250*
042 AC with Puron	3/8	5/16	125	100	100	75	75	50	– –	– –	– –
		3/8	250*	250*	250*	250*	250*	250*	250*	250*	150
048 AC with Puron	3/8	3/8	250*	250*	250*	250*	250*	250*	230	160	– –
060 AC with Puron	3/8	3/8	250*	250*	250*	225*	190	150	110	– –	– –

*** Maximum actual length not to exceed 200 ft (61 m)**

† Total equivalent length accounts for losses due to elbows or fitting. See the Residential Piping and Long Line Guideline for details.

– – = outside acceptable range

Maximum Total Equivalent Length
Outdoor Unit ABOVE Indoor Unit

Size	Liquid Line Connection	Liquid Line Diam. w/ TXV	AC with Puron Refrigerant Maximum Total Equivalent Length†: Outdoor unit ABOVE Indoor Vertical Separation ft (m)							
			25 (7.6)	26–50 (7.9–15.2)	51–75 (15.5–22.9)	76–100 (23.2–30.5)	101–125 (30.8–38.1)	126–150 (38.4–45.7)	151–175 (46.0–53.3)	176–200 (53.6–61.0)
018 AC with Puron	3/8	1/4	175	250*	250*	250*	250*	250*	250*	250*
		5/16	250*	250*	250*	250*	250*	250*	250*	250*
		3/8	250*	250*	250*	250*	250*	250*	250*	250*
024 AC with Puron	3/8	1/4	100	125	175	200	225*	250*	250*	250*
		5/16	250*	250*	250*	250*	250*	250*	250*	250*
		3/8	250*	250*	250*	250*	250*	250*	250*	250*
030 AC with Puron	3/8	1/4	30	– –	– –	– –	– –	– –	– –	– –
		5/16	250*	250*	250*	250*	250*	250*	250*	250*
		3/8	250*	250*	250*	250*	250*	250*	250*	250*
036 AC with Puron	3/8	5/16	225*	250*	250*	250*	250*	250*	250*	250*
		3/8	250*	250*	250*	250*	250*	250*	250*	250*
042 AC with Puron	3/8	5/16	175	200	250*	250*	250*	250*	250*	250*
		3/8	250*	250*	250*	250*	250*	250*	250*	250*
048 AC with Puron	3/8	3/8	250*	250*	250*	250*	250*	250*	250*	250*
060 AC with Puron	3/8	3/8	250*	250*	250*	250*	250*	250*	250*	250*

*** Maximum actual length not to exceed 200 ft (61 m)**

† Total equivalent length accounts for losses due to elbows or fitting. See the Residential Piping and Long Line Guideline for details.

– – = outside acceptable range

REFRIGERANT CHARGE ADJUSTMENTS

Liquid Line Size	Puron Charge oz/ft (g/m)
3/8	0.60 (17.74) (Factory charge for lineset = 9 oz / 266.16 g)
5/16	0.40 (11.83)
1/4	0.27 (7.98)

Units are factory charged for 15 ft (4.6 m) of 3/8" liquid line. The factory charge for 3/8" lineset 9 oz. When using other length or diameter liquid lines, charge adjustments are required per the chart above.

Charging Formula:

[(Lineset oz/ft x total length) – (factory charge for lineset)] = charge adjustment

Example 1: System has 15 ft of line set using existing 1/4" liquid line. What charge adjustment is required?

Formula: (.27 oz/ft x 15ft) – (9 oz) = (-4.95) oz.

Net result is to remove 4.95 oz of refrigerant from the system

Example 2: System has 45 ft of existing 5/16" liquid line. What is the charge adjustment?

Formula: (.40 oz/ft. x 45ft) – (9 oz.) = 9 oz.

Net result is to add 9 oz of refrigerant to the system

LONG LINE APPLICATIONS

An application is considered Long Line, when the refrigerant level in the system requires the use of accessories to maintain acceptable refrigerant management for systems reliability. See Accessory Usage Guideline table for required accessories. Defining a system as long line depends on the liquid line diameter, actual length of the tubing, and vertical separation between the indoor and outdoor units.

For Air Conditioner systems, the chart below shows when an application is considered Long Line.

AC WITH PURON® REFRIGERANT LONG LINE DESCRIPTION ft (m)
Beyond these lengths, long line accessories are required

Liquid Line Size	Units On Same Level	Outdoor Below Indoor	Outdoor Above Indoor
1/4	No accessories needed within allowed lengths	No accessories needed within allowed lengths	175 (53.3)
5/16	120 (36.6)	50 (15.2) vertical or 120 (36.6) total	120 (36.6)
3/8	80 (24.4)	35 (10.7) vertical or 80 24.4) total	80 (24.4)

Note: See Long Line Guideline for details

VAPOR LINE SIZING AND COOLING CAPACITY LOSS

Acceptable vapor line diameters provide adequate oil return to the compressor while avoiding excessive capacity loss. The suction line diameters shown in the chart below are acceptable for AC systems with Puron refrigerant:

Vapor Line Sizing and Cooling Capacity Losses — Puron® Refrigerant 1-Stage Air Conditioner Applications

Unit Nominal Size (Btuh)	Maximum Liquid Line Diameters (In. OD)	Vapor Line Diameters (In. OD)	Cooling Capacity Loss (%) Total Equivalent Line Length ft. (m)								
			26–50 (7.9–15.2)	51–80 (15.5–24.4)	81–100 (24.7–30.5)	101–125 (30.8–38.1)	126–150 (38.4–45.7)	151–175 (46.0–53.3)	176–200 (53.6–61.0)	201–225 (61.3–68.6)	226–250 (68.9–76.2)
018 1 Stage AC with Puron	3/8	1/2	1	2	3	5	6	7	8	9	11
		5/8	0	1	1	1	2	2	2	3	3
		3/4	0	0	0	0	1	1	1	1	1
024 1 Stage AC with Puron	3/8	5/8	0	1	2	2	3	3	4	5	5
		3/4	0	0	1	1	1	1	1	2	2
		7/8	0	0	0	0	0	1	1	1	1
030 1 Stage AC with Puron	3/8	5/8	1	2	3	3	4	5	6	7	8
		3/4	0	0	1	1	1	2	2	2	3
		7/8	0	0	0	0	1	1	1	1	1
036 1 Stage AC with Puron	3/8	5/8	1	2	4	5	6	8	9	10	12
		3/4	0	1	1	2	2	3	3	4	4
		7/8	0	0	0	1	1	1	1	2	2
042 1 Stage AC with Puron	3/8	3/4	0	1	2	2	3	4	4	5	6
		7/8	0	0	1	1	1	2	2	2	3
		1 1/8	0	0	0	0	0	0	0	0	0
048 1 Stage AC with Puron	3/8	3/4	0	1	2	3	4	5	5	6	7
		7/8	0	0	1	1	2	2	2	3	3
		1 1/8	0	0	0	0	0	0	0	1	1
060 1 Stage AC with Puron	3/8	3/4	1	2	4	5	6	7	9	10	11
		7/8	0	1	2	2	3	4	4	5	5
		1 1/8	0	0	0	1	1	1	1	1	1

Applications in this area may be long line and may have height restrictions. See the *Residential Piping and Long Line Guideline*.

ACCESSORY USAGE GUIDELINE

ACCESSORY	REQUIRED FOR LOW–AMBIENT COOLING APPLICATIONS (Below 55°F / 12.8°C)	REQUIRED FOR LONG LINE APPLICATIONS* (Over 80 ft. / 24.38 m)
Compressor Start Assist Capacitor and Relay	Yes	Yes
Crankcase Heater	Yes	Yes
Evaporator Freeze Thermostat	Yes (For non–Infinity systems only)	No
Liquid Line Solenoid Valve	No	See Long–Line Application Guideline
Low–ambient Pressure Switch	Yes (For non–Infinity system only)	No
Support Feet	Recommended	No
Thermal Expansion Valve (TXV) Hard Shutoff	Yes	Yes
Winter Start Control	Yes (For non–Infinity systems only)	No

* For tubing line sets between 80 and 200 ft. (24.38 and 60.96 m) and/or 20 ft. (6.09 m) vertical differential, refer to Residential Split–System Longline Application Guideline.

Accessory Description and Usage (Listed Alphabetically)

1. Compressor Start Assist - Capacitor and Relay

Start capacitor and relay gives a ”hard” boost to compressor motor at each start up.

Usage Guideline:

Required for reciprocating compressors in the following applications:

Long line

Low ambient cooling

Hard shut off expansion valve on indoor coil

Liquid line solenoid on indoor coil

Required for single-phase scroll compressors in the following applications:

Long line

Low ambient cooling

Suggested for all compressors in areas with a history of low voltage problems.

2. Compressor Start Assist — PTC Type

Solid state electrical device which gives a ”soft” boost to the compressor at each start-up.

Usage Guideline:

Suggested in installations with marginal power supply.

3. Crankcase Heater

An electric resistance heater which mounts to the base of the compressor to keep the lubricant warm during off cycles. Improves compressor lubrication on restart and minimizes the chance of liquid slugging.

Usage Guideline:

Required in low ambient cooling applications.

Required in long line applications.

Suggested in all commercial applications.

4. Cycle Protector

The cycle protector is designed to prevent compressor short cycling. This control provides an approximate 5-minute delay after power to the compressor has been interrupted for any reason, including power outage, protector control trip, thermostat jiggling, or normal cycling.

5. Evaporator Freeze Thermostat

An SPST temperature-actuated switch that stops unit operation when evaporator reaches freeze-up conditions.

Usage Guideline:

Required when low ambient kit has been added.

6. Low-Ambient Pressure Switch Kit

A long life pressure switch which is mounted to outdoor unit service valve. It is designed to cycle the outdoor fan motor in order to maintain head pressure within normal operating limits (approximately 100 psig to 225 psig). The control will maintain working head pressure at low-ambient temperatures down to 0°F (-18°C) when properly installed.

Usage Guideline:

A Low-Ambient Pressure Switch or MotorMaster® Low-Ambient Controller must be used when cooling operation is used at outdoor temperatures below 55°F (12.8°C).

7. Outdoor Air Temperature Sensor

Designed for use with Carrier Thermostats listed in this publication. This device enables the thermostat to display the outdoor temperature. This device also

is required to enable special thermostat features such as auxiliary heat lock out.

Usage Guideline:

Suggested for all Carrier thermostats listed in this publication.

8. Support Feet

Four stick-on plastic feet that raise the unit 4 in. (101.6 mm) above the mounting pad. This allows sand, dirt, and other debris to be flushed from the unit base, minimizing corrosion.

Usage Guideline:

Suggested in the following applications:

Coastal installations.

Windy areas or where debris is normally circulating.

Rooftop installations.

For improved sound ratings.

9. Thermostatic Expansion Valve (TXV)

A modulating flow-control valve which meters refrigerant liquid flow rate into the evaporator in response to the superheat of the refrigerant gas leaving the evaporator.

Kit includes valve, adapter tubes, and external equalizer tube. Hard shut off types are available.

NOTE: When using a hard shut off TXV with single phase reciprocating compressors, a Compressor Start Assist Capacitor and Relay is required.

Usage Guideline:

Required to achieve AHRI ratings in certain equipment combinations. Refer to combination ratings.

Hard shut off TXV or LLS required in air conditioner long line applications.

Required for use on all zoning systems.

10. Time-Delay Relay

An SPST delay relay which briefly continues operation of indoor blower motor to provide additional cooling after the compressor cycles off.

NOTE: Most indoor unit controls include this feature. For those that do not, use the guideline below.

Usage Guideline:

For improved efficiency ratings for certain combinations of indoor and outdoor units. Refer to AHRI Unitary Directory.

12. Winter Start Control

This control is designed to alleviate nuisance opening of the low-pressure switch by bypassing it for the first 3 minutes of operation.

ACCESSORIES

KIT NUMBER	KIT NAME	18–30	24–30	30–30	36–30	42–30	48–30	60–30
KAACH1701AAA	CRANKCASE HTR	X	X	X	X			
KAACH1601AAA	CRANKCASE HTR					X		
STANDARD	CRANKCASE HTR						S	S
KAAFT0101AAA	FREEZE THERMOSTAT	X	X	X	X	X	X	X
KSAHS2701AAA	HARD START (CAP/RELAY)	X	X	X	X	X	X	X
KSALA0301410	LOW–AMBIENT PRESSURE SWITCH	X	X	X	X	X	X	X
KAACS0201PTC	PTC START ASSIST	X	X	X	X	X	X	X
KAALS0201LLS	SOLENOID VALVE	X	X	X	X	X	X	X
KSASF0101AAA	SUPPORT FEET	X	X	X	X	X	X	X
KAATD0101TDR	TIME DELAY	X	X	X	X	X	X	X
KSATX0201PUR	TXV (HSO)	X	X	X				
KSATX0301PUR	TXV (HSO)				X			
KSATX0401PUR	TXV (HSO)					X		
KSATX0501PUR	TXV (HSO)						X	X
KAAWS0101AAA	WINTER START	X	X	X	X	X	X	X

X = Accessory, S = Standard

ACCESSORY CONTROLS

PART NUMBER	DESCRIPTION
SYSTXCCUID01–V	Infinity Control Deluxe 7–Day Programmable (4–Wire User Interface w/ multiple functionality)
SYSTXCCUIZ01–V	Infinity Control Deluxe Zoning 7–Day Programmable (Wall–mounted control for a multi–zone system. w/ multiple functionality)
SYSTXCCUID01–B	Infinity Control Deluxe 7–Day Programmable (Wall–mounted system control.)
SYSTXCCUIZ01–B	Infinity Control Deluxe Zoning 7–Day Programmable (Wall–mounted control for a multi–zone system.)
SYSTXCC4ZC01	Infinity 4–Zone Damper Control Module (Wall–mounted control for a four–zone system.)
SYSTXCCSMS01	Infinity Smart Sensor (Optional wall control used to monitor temperature and/or fan control in an individual zone.)
SYSTXCCRRS01	Infinity Remote Room Sensor (Monitors temperature in an individual zone.)
SYSTXCCRCT01 or SYSTXCCRWF01	Infinity System Remote Access Module (Hardware for wireless access and control via internet.)
SYSTXCCNIM01	Infinity Network Interface Module (Connects Heat Recovery and Energy Recovery Ventilators on non–zoning applications.)

ELECTRICAL DATA

UNIT SIZE – SERIES	V/PH	OPER VOLTS*		COMPR		FAN	MCA	MIN WIRE SIZE†	MIN WIRE SIZE†	MAX LENGTH ft (m)‡	MAX LENGTH ft (m)‡	MAX FUSE** or CKT BRK AMPS
		MAX	MIN	LRA	RLA	FLA		60° C	75° C	60° C	75° C	
18–30	208/230/1	253	197	48.0	9.0	0.43	11.7	14	14	66 (20.12)	62 (18.90)	20
24–30				58.3	13.5	0.60	17.5	14	14	44 (13.41)	42 (12.80)	25
30–30				64.0	12.8	0.60	16.6	14	14	46 (14.02)	44 (13.41)	25
36–30				77.0	14.1	0.60	18.2	14	14	44 (13.41)	42 (12.80)	30
42–30				112.0	17.9	1.00	23.4	12	12	52 (15.85)	50 (15.24)	40
48–30				109.0	19.9	1.20	26.1	10	10	77 (23.47)	73 (22.25)	40
60–30				135.0	21.4	1.20	28.0	10	10	71 (21.64)	68 (20.73)	40

* Permissible limits of the voltage range at which the unit will operate satisfactorily

† If wire is applied at ambient greater than 30°C, consult table 310–16 of the NEC (NFPA 70). The ampacity of non–metallic–sheathed cable (NM), trade name ROMEX, shall be that of 60°C conditions, per the NEC (NFPA 70) Article 336–26. If other than uncoated (no–plated), 60 or 75°C insulation, copper wire (solid wire for 10 AWG or smaller, stranded wire for larger than 10 AWG) is used, consult applicable tables of the NEC (NFPA 70).

‡ Length shown is as measured one way along wire path between unit and service panel for voltage drop not to exceed 2%.

** Time–Delay fuse.

FLA – Full Load Amps
LRA – Locked Rotor Amps
MCA – Minimum Circuit Amps
RLA – Rated Load Amps

NOTE: Control circuit is 24–V on all units and requires external power source. Copper wire must be used from service disconnect to unit. All motors/compressors contain internal overload protection.

Complies with 2007 requirements of ASHRAE Standards 90.1

24ANB6

A-WEIGHTED SOUND POWER (dBA)

UNIT SIZE–SERIES	STANDARD RATING	TYPICAL OCTAVE BAND SPECTRUM (without tone adjustment)						
		125	250	500	1000	2000	4000	8000
18–30	66	52.0	56.5	60.5	61.5	59.0	53.5	44.5
24–30	67	51.5	58.0	61.5	62.5	59.5	54.0	47.5
30–30	68	56.5	60.0	63.0	62.5	59.5	54.5	46.0
36–30	69	55.5	61.0	62.0	62.5	61.0	57.0	49.0
42–30	68	53.0	60.5	62.0	63.0	60.5	58.0	51.0
48–30	70	55.0	61.0	63.5	63.0	60.5	57.0	52.0
60–30	70	55.0	61.5	63.0	63.0	59.5	57.0	51.5

NOTE: Tested in accordance with AHRI Standard 270–08 (not listed in AHRI).

CHARGING SUBCOOLING (TXV-TYPE EXPANSION DEVICE)

UNIT SIZE–SERIES	REQUIRED SUBCOOLING °F (°C)
18–30	9 (5.0)
24–30	11 (6.1)
30–30	10 (5.6)
36–30	11 (6.1)
42–30	11 (6.1)
48–30	12 (6.7)
60–30	12 (6.7)

DIMENSIONS - ENGLISH

UNIT	SERIES	ELECTRICAL CHARACTERISTICS				A	B	C	D	E	F	G	K	L	M	N	P	OPERATING WEIGHT (lbs)	SHIPPING WEIGHT (lbs)	SHIPPING DIMENSIONS (L x W x H)
24ANB618	0	X	O	O	O	31 3/16"	29 9/16"	3 3/4"	3/4"	6 9/16"	24 11/16"	9 1/8"	2 13/16"	1/2"	15 1/4"	15"	14"	184	217	32 5/16" X 35 1/2" X 35 15/16"
24ANB624	0	X	O	O	O	31 3/16"	29 9/16"	3 3/4"	3/4"	6 9/16"	24 11/16"	9 1/8"	2 13/16"	1/2"	15 1/4"	15 1/4"	14"	186	219	32 5/16" X 35 1/2" X 35 15/16"
24ANB630	0	X	O	O	O	31 3/16"	32 15/16"	3 3/4"	3/4"	6 9/16"	24 11/16"	9 1/8"	2 13/16"	1/2"	15 3/4"	15 1/2"	16 1/2"	193	227	32 5/16" X 35 1/2" X 39 3/8"
24ANB636	0	X	O	O	O	35"	30 7/16"	3 7/8"	7/8"	6 9/16"	28 7/16"	9 1/8"	2 15/16"	5/8"	17 1/4"	17 1/8"	14 3/4"	209	250	36 1/8" X 39 1/4" X 35 15/16"
24ANB642	0	X	O	O	O	35"	40 5/8"	3 7/8"	7/8"	6 9/16"	28 7/16"	9 1/8"	2 15/16"	5/8"	17 1/2"	16 3/4"	18 1/4"	261	303	36 1/8" X 39 1/4" X 46 1/8"
24ANB648	0	X	O	O	O	35"	40 5/8"	3 7/8"	7/8"	6 9/16"	28 7/16"	9 1/8"	2 15/16"	5/8"	17 1/2"	17 1/4"	18 3/4"	303	346	36 1/8" X 39 1/4" X 46 1/8"
24ANB660	0	X	O	O	O	35"	47 7/16"	3 7/8"	7/8"	6 9/16"	28 7/16"	9 1/8"	2 15/16"	5/8"	17 3/4"	16"	21 1/2"	334	380	36 1/8" X 39 1/4" X 51 13/16"
		208-230-1-60	230-1-60	208/230-3-60	460-3-60															

X = YES
O = NO

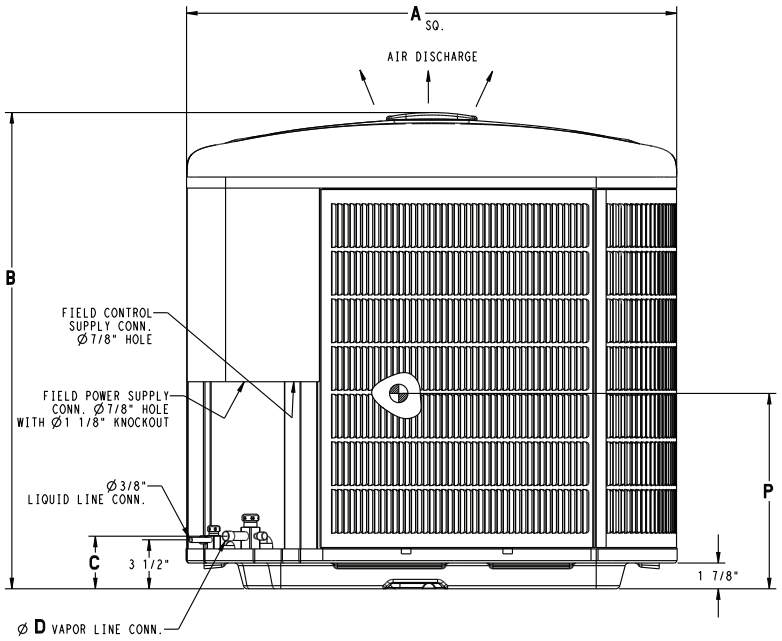

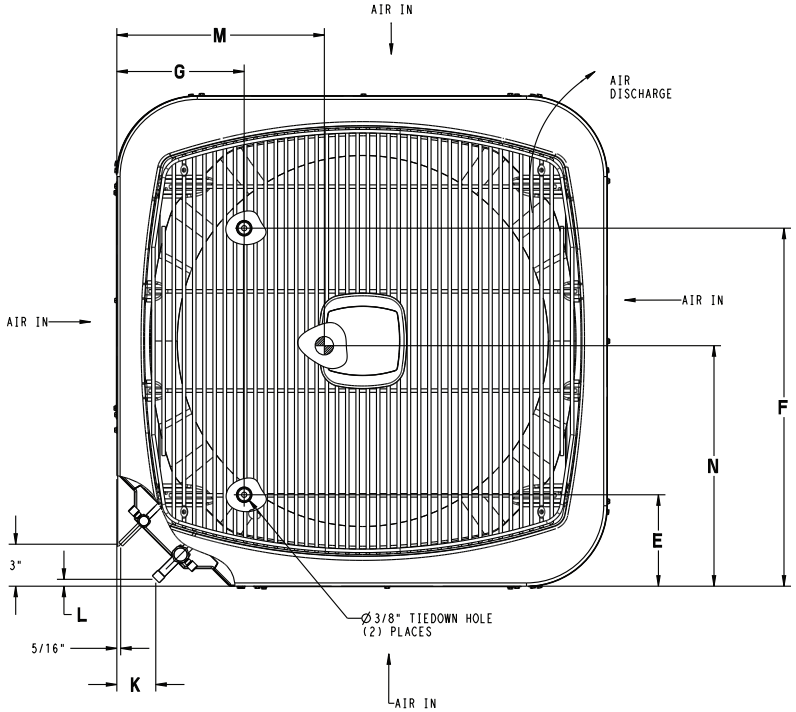

UNIT SIZE	MINIMUM MOUNTING PAD DIMENSIONS
-	26" X 26"
18,24,30	31 1/2" X 31 1/2"
36,37,42,43,48,60	35" X 35"

DIMENSIONS - SI

UNIT	SERIES	ELECTRICAL CHARACTERISTICS				A	B	C	D	E	F	G	K	L	M	N	P	OPERATING WEIGHT (Kgs)	SHIPPING WEIGHT (Kgs)	SHIPPING DIMENSIONS (L x W x H)
24ANB618	0	X	O	O	O	792.5	750.6	95.6	19.1	166.1	626.3	231.3	70.9	12.7	387.4	381.0	355.6	83	98	821.2 X 901.2 X 913.2
24ANB624	0	X	O	O	O	792.5	750.6	95.6	19.1	166.1	626.3	231.3	70.9	12.7	387.4	387.4	355.6	84	99	821.2 X 901.2 X 913.2
24ANB630	0	X	O	O	O	792.5	836.9	95.6	19.1	166.1	626.3	231.3	70.9	12.7	400.1	393.7	419.1	88	103	821.2 X 901.2 X 999.5
24ANB636	0	X	O	O	O	889.0	773.6	97.9	22.2	166.1	722.8	231.3	74.5	16.3	438.2	435.0	374.7	95	113	917.7 X 997.7 X 913.2
24ANB642	0	X	O	O	O	889.0	1032.6	97.9	22.2	166.1	722.8	231.3	74.5	16.3	444.5	425.5	463.6	118	137	917.7 X 997.7 X 1172.2
24ANB648	0	X	O	O	O	889.0	1032.6	97.9	22.2	166.1	722.8	231.3	74.5	16.3	444.5	438.2	476.3	137	157	917.7 X 997.7 X 1172.2
24ANB660	0	X	O	O	O	889.0	1205.4	97.9	22.2	166.1	722.8	231.3	74.5	16.3	450.9	406.4	546.1	151	172	917.7 X 997.7 X 1315.7
		208-230-1-60	230-1-60	208/230-3-60	460-3-60															

X = YES
O = NO

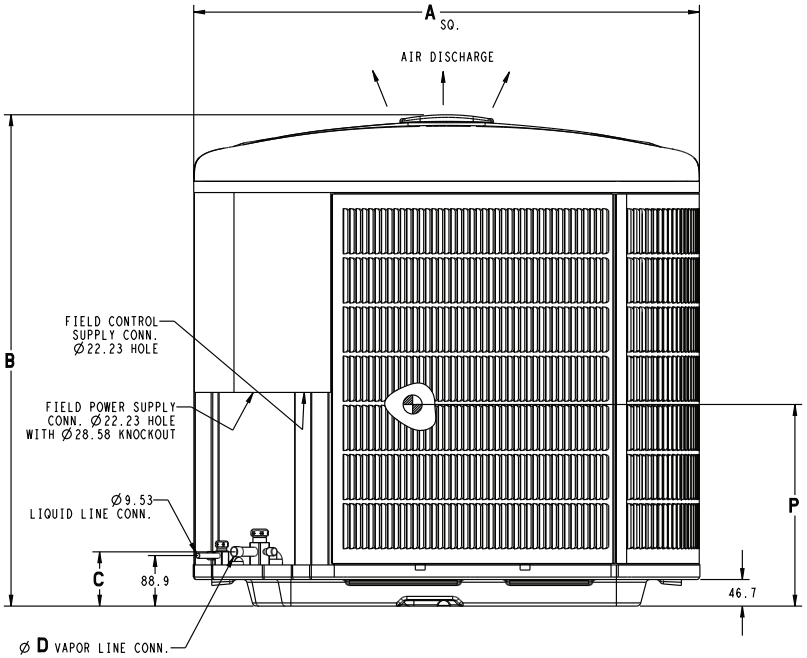

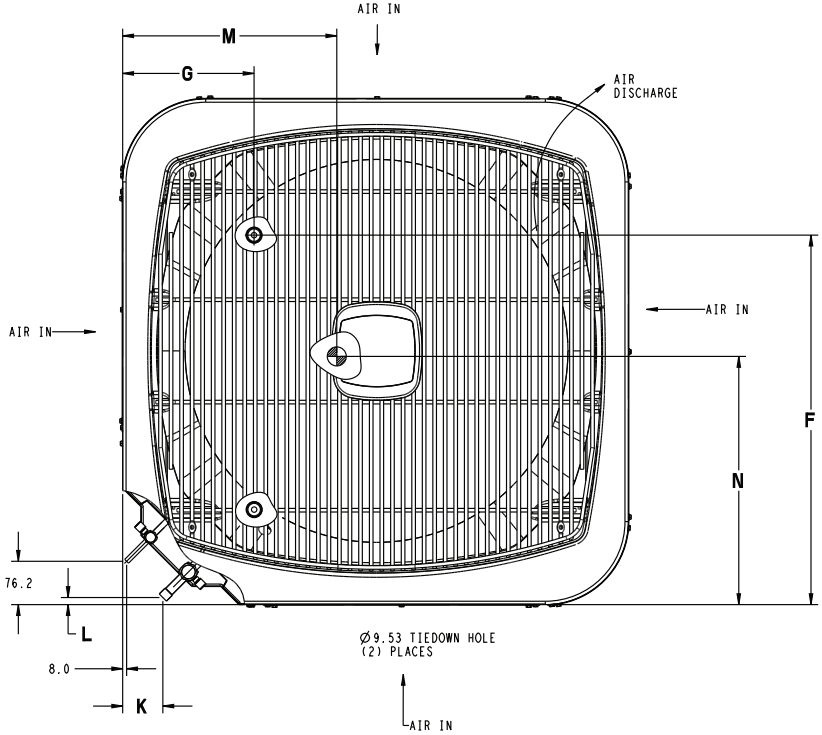

UNIT SIZE	MINIMUM MOUNTING PAD DIMENSIONS
-	660.4 X 660.4
18,24,30	800.1 X 800.1
36,37,42,43,48,60	889.0 X 889.0

24ANB6

CLEARANCES

Clearances (various examples)

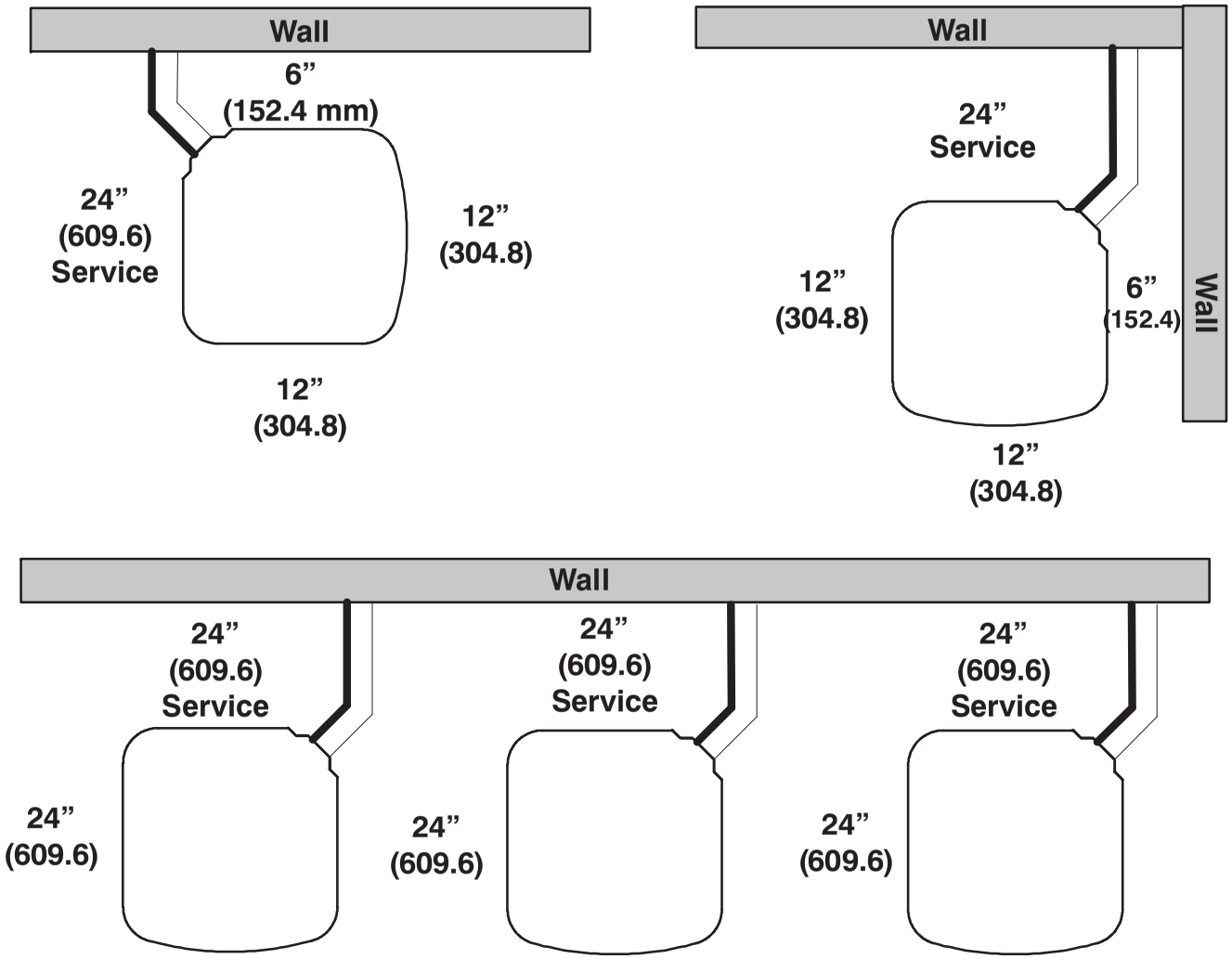

Note: Numbers in ( ) = mm

IMPORTANT: When installing multiple units in an alcove, roof well, or partially enclosed area, ensure there is adequate ventilation to prevent re-circulation of discharge air.

COMBINATION RATINGS

AHRI Ref. Number	Model Number	Indoor Coil Model Number	Furnace Model Number	Cooling Capacity	EER	SEER
4608770	24ANB618A**30	†CNPV*1917A**+TDR		18,000	12.0	14.5
4608772	24ANB618A**30	CAP**1814A**	58CV(A,X)070−12	17,800	13.0	15.5
4608773	24ANB618A**30	CAP**1814A**	58PH*045−08	18,000	13.0	16.0
4608771	24ANB618A**30	CAP**1814A**+TDR		18,000	11.5	14.0
4608775	24ANB618A**30	CAP**2414A**	58CV(A,X)070−12	18,000	13.0	16.0
4608776	24ANB618A**30	CAP**2414A**	58PH*045−08	18,000	13.0	16.0
4608774	24ANB618A**30	CAP**2414A**+TDR		18,000	12.0	14.5
4608838	24ANB618A**30	CAP**2417A**	58CV(A,X)070−12	18,000	13.0	16.0
4608779	24ANB618A**30	CAP**2417A**	58CV(A,X)090−16	18,000	13.0	16.0
4608780	24ANB618A**30	CAP**2417A**	58MEB040−12	18,000	13.5	16.5
4608781	24ANB618A**30	CAP**2417A**	58MEC060−12	18,000	13.5	16.5
4608778	24ANB618A**30	CAP**2417A**	58MV(B,C)060−14	18,000	13.0	16.0
4608839	24ANB618A**30	CAP**2417A**	58PH*045−08	18,000	13.0	16.0
4644706	24ANB618A**30	CAP**2417A**	58UVB060−14	18,000	13.2	16.0
4612799	24ANB618A**30	CAP**2417A**	OVLAAB036098	18,000	13.0	16.0
4608844	24ANB618A**30	CAP**2417A**	OVMAAB036098	18,000	13.0	16.0
4608777	24ANB618A**30	CAP**2417A**+TDR		18,000	12.0	14.5
4608857	24ANB618A**30	CAP**3621A**	58MV(B,C)080−14	18,000	13.0	16.0
4608856	24ANB618A**30	CAP**3621A**+TDR		18,000	12.0	14.5
4608801	24ANB618A**30	CNPH*2417A**	58CV(A,X)070−12	18,000	13.0	16.0
4608802	24ANB618A**30	CNPH*2417A**	58CV(A,X)090−16	18,000	13.0	16.0
4608806	24ANB618A**30	CNPH*2417A**	58HDV040−−12	18,000	13.0	16.0
4608807	24ANB618A**30	CNPH*2417A**	58HDV060−−12	18,000	13.0	16.0
4608804	24ANB618A**30	CNPH*2417A**	58MEB040−12	18,000	13.5	16.5
4608805	24ANB618A**30	CNPH*2417A**	58MEC060−12	18,000	13.5	16.0
4608799	24ANB618A**30	CNPH*2417A**	58MV(B,C)060−14	18,000	13.0	16.0
4608800	24ANB618A**30	CNPH*2417A**	58MV(B,C)080−14	18,000	13.0	16.0
4608798	24ANB618A**30	CNPH*2417A**	58MVB040−14	18,000	13.0	16.0
4608803	24ANB618A**30	CNPH*2417A**	58PH*045−08	18,000	13.0	16.0
4612802	24ANB618A**30	CNPH*2417A**	OVLAAB036098	18,000	13.0	16.0
4608850	24ANB618A**30	CNPH*2417A**	OVMAAB036098	18,000	13.0	16.0
4608797	24ANB618A**30	CNPH*2417A**+TDR		18,000	12.0	14.5
4608783	24ANB618A**30	CNPV*1814A**	58CV(A,X)070−12	18,000	13.0	16.0
4608784	24ANB618A**30	CNPV*1814A**	58PH*045−08	18,000	13.0	16.0
4608782	24ANB618A**30	CNPV*1814A**+TDR		18,000	12.0	14.5
4608840	24ANB618A**30	CNPV*1917A**	58CV(A,X)070−12	18,000	13.0	16.0
4608786	24ANB618A**30	CNPV*1917A**	58CV(A,X)090−16	18,000	13.5	16.0
4612533	24ANB618A**30	CNPV*1917A**	58HDV040−−12	18,600	13.0	16.0
4612534	24ANB618A**30	CNPV*1917A**	58HDV060−−12	18,600	13.0	16.0
4608787	24ANB618A**30	CNPV*1917A**	58MEB040−12	18,000	13.5	17.0
4608788	24ANB618A**30	CNPV*1917A**	58MEC060−12	18,000	13.5	16.5
4608785	24ANB618A**30	CNPV*1917A**	58MV(B,C)060−14	18,000	13.5	16.0
4608841	24ANB618A**30	CNPV*1917A**	58PH*045−08	18,000	13.5	16.0
4644707	24ANB618A**30	CNPV*1917A**	58UVB060−14	18,000	13.5	16.0
4612800	24ANB618A**30	CNPV*1917A**	OVLAAB036098	18,000	13.0	16.0
4608846	24ANB618A**30	CNPV*1917A**	OVMAAB036098	18,000	13.0	16.0
4608790	24ANB618A**30	CNPV*2414A**	58CV(A,X)070−12	18,000	13.0	16.0
4608791	24ANB618A**30	CNPV*2414A**	58PH*045−08	18,000	13.0	16.0
4608789	24ANB618A**30	CNPV*2414A**+TDR		18,000	12.0	14.5
4608842	24ANB618A**30	CNPV*2417A**	58CV(A,X)070−12	18,000	13.0	16.0
4608794	24ANB618A**30	CNPV*2417A**	58CV(A,X)090−16	18,000	13.0	16.0
4608854	24ANB618A**30	CNPV*2417A**	58HDV040−−12	18,000	13.0	15.5
4608855	24ANB618A**30	CNPV*2417A**	58HDV060−−12	18,000	13.0	15.5
4608795	24ANB618A**30	CNPV*2417A**	58MEB040−12	18,000	13.5	16.5
4608796	24ANB618A**30	CNPV*2417A**	58MEC060−12	18,000	13.5	16.0
4608793	24ANB618A**30	CNPV*2417A**	58MV(B,C)060−14	18,000	13.0	16.0
4608843	24ANB618A**30	CNPV*2417A**	58PH*045−08	18,000	13.0	16.0
4644708	24ANB618A**30	CNPV*2417A**	58UVB060−14	18,000	13.2	16.0
4612801	24ANB618A**30	CNPV*2417A**	OVLAAB036098	18,000	13.0	16.0
4608848	24ANB618A**30	CNPV*2417A**	OVMAAB036098	18,000	13.0	16.0
4608792	24ANB618A**30	CNPV*2417A**+TDR		18,000	12.0	14.5
4608859	24ANB618A**30	CNPV*3621A**	58MV(B,C)080−14	18,000	13.0	16.0
4608858	24ANB618A**30	CNPV*3621A**+TDR		18,000	12.0	14.5
4608812	24ANB618A**30	CSPH*2412A**	58CV(A,X)070−12	18,000	13.0	16.0
4608813	24ANB618A**30	CSPH*2412A**	58CV(A,X)090−16	18,000	13.0	16.0
4608817	24ANB618A**30	CSPH*2412A**	58HDV040−−12	18,000	13.0	16.0
4608818	24ANB618A**30	CSPH*2412A**	58HDV060−−12	18,000	13.0	16.0
4608815	24ANB618A**30	CSPH*2412A**	58MEB040−12	18,000	13.5	16.5
4608816	24ANB618A**30	CSPH*2412A**	58MEC060−12	18,000	13.5	16.0
4608810	24ANB618A**30	CSPH*2412A**	58MV(B,C)060−14	18,000	13.0	16.0
4608811	24ANB618A**30	CSPH*2412A**	58MV(B,C)080−14	18,000	13.0	16.0
4608809	24ANB618A**30	CSPH*2412A**	58MVB040−14	18,000	13.0	16.0
4608814	24ANB618A**30	CSPH*2412A**	58PH*045−08	18,000	13.0	16.0
4612803	24ANB618A**30	CSPH*2412A**	OVLAAB036098	18,000	13.0	16.0
4608852	24ANB618A**30	CSPH*2412A**	OVMAAB036098	18,000	13.0	16.0
4608808	24ANB618A**30	CSPH*2412A**+TDR		18,000	12.0	14.5
4608819	24ANB618A**30	FB4CNF018+TXV		18,000	13.0	16.0
4608820	24ANB618A**30	FB4CNF024+TXV		18,000	13.0	16.0
4608821	24ANB618A**30	FB4CNF030+TXV		18,000	12.5	15.0
4638115	24ANB618A**30	FE4ANF002+UI		18,000	13.5	16.5

See notes on page 35

COMBINATION RATINGS CONTINUED

AHRI Ref. Number	Model Number	Indoor Coil Model Number	Furnace Model Number	Cooling Capacity	EER	SEER
4608827	24ANB618A**30	FF1ENP018		18,000	11.5	14.0
4608828	24ANB618A**30	FF1ENP019		18,000	13.0	15.5
4608829	24ANB618A**30	FF1ENP024		18,000	12.0	14.5
4608830	24ANB618A**30	FF1ENP025		18,000	13.5	16.0
4608831	24ANB618A**30	FF1ENP031		18,000	13.0	16.0
4608832	24ANB618A**30	FF1ENP037		18,000	13.0	16.0
4638116	24ANB618A**30	FV4CNF002		18,000	13.5	16.5
4608826	24ANB618A**30	FX4DN(B,F)031		18,000	13.0	16.0
4608824	24ANB618A**30	FX4DNF019		18,000	13.5	16.5
4608825	24ANB618A**30	FX4DNF025		18,000	13.5	16.0
4608822	24ANB618A**30	FY5BNF018+TXV		18,000	12.5	15.0
4608823	24ANB618A**30	FY5BNF024+TXV		18,000	12.5	15.0
4608860	24ANB624A**30	†CNPV*3117A**+TDR		23,800	12.0	14.5
4608862	24ANB624A**30	CAP**2414A**	58CV(A,X)070–12	23,000	12.5	15.5
4608863	24ANB624A**30	CAP**2414A**	58PH*045–08	23,200	12.5	15.5
4608861	24ANB624A**30	CAP**2414A**+TDR		23,200	11.5	14.0
4609096	24ANB624A**30	CAP**2417A**	58CV(A,X)070–12	23,000	12.5	15.5
4608866	24ANB624A**30	CAP**2417A**	58CV(A,X)090–16	23,000	13.0	16.0
4608867	24ANB624A**30	CAP**2417A**	58MEB040–12	23,600	13.0	16.0
4608868	24ANB624A**30	CAP**2417A**	58MEC060–12	23,600	13.0	16.0
4608869	24ANB624A**30	CAP**2417A**	58MEC080–12	23,400	13.0	16.0
4608865	24ANB624A**30	CAP**2417A**	58MV(B,C)060–14	23,400	13.0	16.0
4609097	24ANB624A**30	CAP**2417A**	58PH*045–08	23,200	12.5	15.5
4644709	24ANB624A**30	CAP**2417A**	58UVB060–14	23,400	13.0	15.5
4612804	24ANB624A**30	CAP**2417A**	OVLAAB036098	23,200	12.5	15.5
4609118	24ANB624A**30	CAP**2417A**	OVMAAB036098	23,200	12.5	15.5
4609120	24ANB624A**30	CAP**2417A**	OVMAAB042112	23,200	13.0	16.0
4608864	24ANB624A**30	CAP**2417A**+TDR		23,200	11.5	14.0
4608871	24ANB624A**30	CAP**3014A**	58CV(A,X)070–12	23,000	13.0	16.0
4608872	24ANB624A**30	CAP**3014A**	58PH*045–08	23,400	12.5	15.5
4608870	24ANB624A**30	CAP**3014A**+TDR		23,400	11.5	14.0
4609098	24ANB624A**30	CAP**3017A**	58CV(A,X)070–12	23,200	13.0	16.0
4608875	24ANB624A**30	CAP**3017A**	58CV(A,X)090–16	23,200	13.0	16.0
4608876	24ANB624A**30	CAP**3017A**	58MEB040–12	23,800	13.0	16.0
4608877	24ANB624A**30	CAP**3017A**	58MEC060–12	23,800	13.0	16.0
4608878	24ANB624A**30	CAP**3017A**	58MEC080–12	23,600	13.0	16.0
4608874	24ANB624A**30	CAP**3017A**	58MV(B,C)060–14	23,400	13.0	16.0
4609099	24ANB624A**30	CAP**3017A**	58PH*045–08	23,400	13.0	16.0
4644710	24ANB624A**30	CAP**3017A**	58UVB060–14	23,400	13.2	16.0
4612805	24ANB624A**30	CAP**3017A**	OVLAAB036098	23,400	13.0	16.0
4609121	24ANB624A**30	CAP**3017A**	OVMAAB036098	23,400	13.0	15.5
4609123	24ANB624A**30	CAP**3017A**	OVMAAB042112	23,200	13.0	16.0
4608873	24ANB624A**30	CAP**3017A**+TDR		23,400	11.5	14.0
4609021	24ANB624A**30	CAP**3614A**	58CV(A,X)070–12	23,200	13.0	16.0
4609022	24ANB624A**30	CAP**3614A**	58PH*045–08	23,400	13.0	16.0
4609020	24ANB624A**30	CAP**3614A**+TDR		23,400	11.5	14.0
4609025	24ANB624A**30	CAP**3617A**	58CV(A,X)070–12	23,200	13.0	16.0
4609026	24ANB624A**30	CAP**3617A**	58CV(A,X)090–16	23,200	13.0	16.0
4609028	24ANB624A**30	CAP**3617A**	58MEB040–12	23,800	13.0	16.0
4609029	24ANB624A**30	CAP**3617A**	58MEC060–12	24,000	13.0	16.0
4609030	24ANB624A**30	CAP**3617A**	58MEC080–12	23,800	13.0	16.0
4609024	24ANB624A**30	CAP**3617A**	58MV(B,C)060–14	23,600	13.0	16.0
4609027	24ANB624A**30	CAP**3617A**	58PH*045–08	23,600	13.0	16.0
4609023	24ANB624A**30	CAP**3617A**+TDR		23,400	11.5	14.0
4609042	24ANB624A**30	CAP**3619A**	58MEB040–12	23,800	13.0	16.0
4609043	24ANB624A**30	CAP**3619A**	58MEC060–12	24,000	13.0	16.0
4609041	24ANB624A**30	CAP**3619A**+TDR		23,400	11.5	14.0
4609036	24ANB624A**30	CAP**3621A**	58CV(A,X)090–16	23,200	13.0	16.0
4609037	24ANB624A**30	CAP**3621A**	58CV(A,X)110–20	23,400	13.0	16.0
4609038	24ANB624A**30	CAP**3621A**	58MEB040–12	24,000	13.0	16.0
4609039	24ANB624A**30	CAP**3621A**	58MEC060–12	24,000	13.0	16.0
4609040	24ANB624A**30	CAP**3621A**	58MEC080–12	23,800	13.0	16.0
4609032	24ANB624A**30	CAP**3621A**	58MV(B,C)060–14	23,600	13.0	16.0
4609033	24ANB624A**30	CAP**3621A**	58MV(B,C)080–14	23,200	13.0	16.0
4609034	24ANB624A**30	CAP**3621A**	58MV(B,C)080–20	23,000	13.0	16.0
4609035	24ANB624A**30	CAP**3621A**	58MV(B,C)100–20	23,200	13.0	16.0
4609031	24ANB624A**30	CAP**3621A**+TDR		23,400	11.5	14.0
4608960	24ANB624A**30	CNPF*2418A**+TDR		23,200	11.5	14.0
4609078	24ANB624A**30	CNPF*3618A**+TDR		23,400	11.5	14.0
4608909	24ANB624A**30	CNPH*2417A**	58CV(A,X)070–12	23,000	12.5	15.5
4608910	24ANB624A**30	CNPH*2417A**	58CV(A,X)090–16	23,000	13.0	16.0
4608911	24ANB624A**30	CNPH*2417A**	58CV(A,X)110–20	23,000	12.5	15.5
4608912	24ANB624A**30	CNPH*2417A**	58CV(A,X)135–22	23,000	12.5	15.5
4608913	24ANB624A**30	CNPH*2417A**	58CV(A,X)155–22	23,000	12.5	15.5
4608918	24ANB624A**30	CNPH*2417A**	58HDV040––12	23,200	12.0	15.0
4608919	24ANB624A**30	CNPH*2417A**	58HDV060––12	23,200	12.0	15.0
4608920	24ANB624A**30	CNPH*2417A**	58HDV080––20	23,600	12.5	15.0
4608921	24ANB624A**30	CNPH*2417A**	58HDV100––20	23,400	12.5	15.5
4608915	24ANB624A**30	CNPH*2417A**	58MEB040–12	23,400	13.0	16.0

See notes on page 35

COMBINATION RATINGS CONTINUED

AHRI Ref. Number	Model Number	Indoor Coil Model Number	Furnace Model Number	Cooling Capacity	EER	SEER
4608916	24ANB624A**30	CNPH*2417A**	58MEC060−12	23,400	13.0	16.0
4608917	24ANB624A**30	CNPH*2417A**	58MEC080−12	23,200	13.0	16.0
4608904	24ANB624A**30	CNPH*2417A**	58MV(B,C)060−14	23,200	12.5	15.5
4608905	24ANB624A**30	CNPH*2417A**	58MV(B,C)080−14	23,000	12.5	15.5
4608906	24ANB624A**30	CNPH*2417A**	58MV(B,C)080−20	22,800	12.5	15.5
4608907	24ANB624A**30	CNPH*2417A**	58MV(B,C)100−20	23,000	12.5	15.5
4608908	24ANB624A**30	CNPH*2417A**	58MV(B,C)120−20	23,200	13.0	16.0
4608903	24ANB624A**30	CNPH*2417A**	58MVB040−14	23,000	12.5	15.5
4608914	24ANB624A**30	CNPH*2417A**	58PH*045−08	23,200	12.5	15.5
4612809	24ANB624A**30	CNPH*2417A**	OVLAAB036098	23,200	12.5	15.5
4609133	24ANB624A**30	CNPH*2417A**	OVMAAB036098	23,200	12.5	15.5
4609135	24ANB624A**30	CNPH*2417A**	OVMAAB042112	23,200	12.5	15.5
4608902	24ANB624A**30	CNPH*2417A**+TDR		23,200	11.5	14.0
4608929	24ANB624A**30	CNPH*3017A**	58CV(A,X)070−12	23,200	13.0	16.0
4608930	24ANB624A**30	CNPH*3017A**	58CV(A,X)090−16	23,200	13.0	16.0
4608931	24ANB624A**30	CNPH*3017A**	58CV(A,X)110−20	23,200	13.0	16.0
4608932	24ANB624A**30	CNPH*3017A**	58CV(A,X)135−22	23,200	13.0	16.0
4608933	24ANB624A**30	CNPH*3017A**	58CV(A,X)155−22	23,200	13.0	16.0
4608938	24ANB624A**30	CNPH*3017A**	58HDV040−−12	23,400	12.5	15.5
4608939	24ANB624A**30	CNPH*3017A**	58HDV060−−12	23,800	12.5	15.5
4609116	24ANB624A**30	CNPH*3017A**	58HDV080−−20	23,600	13.0	16.0
4608940	24ANB624A**30	CNPH*3017A**	58HDV100−−20	24,000	13.0	16.0
4608935	24ANB624A**30	CNPH*3017A**	58MEB040−12	23,800	13.0	16.0
4608936	24ANB624A**30	CNPH*3017A**	58MEC060−12	23,800	13.0	16.0
4608937	24ANB624A**30	CNPH*3017A**	58MEC080−12	23,600	13.0	16.0
4608924	24ANB624A**30	CNPH*3017A**	58MV(B,C)060−14	23,400	13.0	16.0
4608925	24ANB624A**30	CNPH*3017A**	58MV(B,C)080−14	23,200	13.0	16.0
4608926	24ANB624A**30	CNPH*3017A**	58MV(B,C)080−20	23,000	13.0	16.0
4608927	24ANB624A**30	CNPH*3017A**	58MV(B,C)100−20	23,200	13.0	16.0
4608928	24ANB624A**30	CNPH*3017A**	58MV(B,C)120−20	23,400	13.0	16.0
4608923	24ANB624A**30	CNPH*3017A**	58MVB040−14	23,200	13.0	16.0
4608934	24ANB624A**30	CNPH*3017A**	58PH*045−08	23,400	13.0	16.0
4612810	24ANB624A**30	CNPH*3017A**	OVLAAB036098	23,400	13.0	16.0
4609136	24ANB624A**30	CNPH*3017A**	OVMAAB036098	23,400	13.0	15.5
4609138	24ANB624A**30	CNPH*3017A**	OVMAAB042112	23,400	13.0	16.0
4608922	24ANB624A**30	CNPH*3017A**+TDR		23,400	11.5	14.0
4608948	24ANB624A**30	CNPH*3117A**	58CV(A,X)070−12	23,600	13.0	16.0
4608949	24ANB624A**30	CNPH*3117A**	58CV(A,X)090−16	23,600	13.0	16.0
4608950	24ANB624A**30	CNPH*3117A**	58CV(A,X)110−20	23,600	13.0	16.0
4608951	24ANB624A**30	CNPH*3117A**	58CV(A,X)135−22	23,600	13.0	16.0
4608952	24ANB624A**30	CNPH*3117A**	58CV(A,X)155−22	23,600	13.0	16.0
4608957	24ANB624A**30	CNPH*3117A**	58HDV040−−12	24,000	13.0	16.0
4608958	24ANB624A**30	CNPH*3117A**	58HDV060−−12	24,000	13.0	16.0
4609117	24ANB624A**30	CNPH*3117A**	58HDV080−−20	24,000	13.0	16.0
4608959	24ANB624A**30	CNPH*3117A**	58HDV100−−20	24,400	13.0	16.0
4608954	24ANB624A**30	CNPH*3117A**	58MEB040−12	24,000	13.0	16.0
4608955	24ANB624A**30	CNPH*3117A**	58MEC060−12	24,000	13.0	16.0
4608956	24ANB624A**30	CNPH*3117A**	58MEC080−12	24,000	13.0	16.0
4608943	24ANB624A**30	CNPH*3117A**	58MV(B,C)060−14	24,000	13.0	16.0
4608944	24ANB624A**30	CNPH*3117A**	58MV(B,C)080−14	23,600	13.0	16.0
4608945	24ANB624A**30	CNPH*3117A**	58MV(B,C)080−20	23,400	13.0	16.0
4608946	24ANB624A**30	CNPH*3117A**	58MV(B,C)100−20	23,600	13.0	16.0
4608947	24ANB624A**30	CNPH*3117A**	58MV(B,C)120−20	23,800	13.0	16.0
4608942	24ANB624A**30	CNPH*3117A**	58MVB040−14	23,600	13.0	16.0
4608953	24ANB624A**30	CNPH*3117A**	58PH*045−08	24,000	13.0	16.0
4612811	24ANB624A**30	CNPH*3117A**	OVLAAB036098	23,800	13.0	16.0
4609139	24ANB624A**30	CNPH*3117A**	OVMAAB036098	23,800	13.0	16.0
4609141	24ANB624A**30	CNPH*3117A**	OVMAAB042112	23,800	13.0	16.0
4608941	24ANB624A**30	CNPH*3117A**+TDR		23,800	12.0	14.5
4609069	24ANB624A**30	CNPH*3617A**	58CV(A,X)070−12	23,200	13.0	16.0
4609070	24ANB624A**30	CNPH*3617A**	58CV(A,X)090−16	23,200	13.0	16.0
4609071	24ANB624A**30	CNPH*3617A**	58CV(A,X)110−20	23,200	13.0	16.0
4609072	24ANB624A**30	CNPH*3617A**	58CV(A,X)135−22	23,200	13.0	16.0
4609073	24ANB624A**30	CNPH*3617A**	58CV(A,X)155−22	23,200	13.0	16.0
4609075	24ANB624A**30	CNPH*3617A**	58MEB040−12	23,800	13.0	16.0
4609076	24ANB624A**30	CNPH*3617A**	58MEC060−12	23,800	13.0	16.0
4609077	24ANB624A**30	CNPH*3617A**	58MEC080−12	23,600	13.0	16.0
4609064	24ANB624A**30	CNPH*3617A**	58MV(B,C)060−14	23,400	13.0	16.0
4609065	24ANB624A**30	CNPH*3617A**	58MV(B,C)080−14	23,200	13.0	16.0
4609066	24ANB624A**30	CNPH*3617A**	58MV(B,C)080−20	23,000	13.0	16.0
4609067	24ANB624A**30	CNPH*3617A**	58MV(B,C)100−20	23,200	13.0	16.0
4609068	24ANB624A**30	CNPH*3617A**	58MV(B,C)120−20	23,400	13.0	16.0
4609063	24ANB624A**30	CNPH*3617A**	58MVB040−14	23,200	13.0	16.0
4609074	24ANB624A**30	CNPH*3617A**	58PH*045−08	23,400	13.0	16.0
4609062	24ANB624A**30	CNPH*3617A**+TDR		23,400	11.5	14.0
4609111	24ANB624A**30	CNPV*1917A**	58CV(A,X)070−12	23,200	13.0	16.0
4609112	24ANB624A**30	CNPV*1917A**	58CV(A,X)090−16	23,200	13.0	16.0
4609114	24ANB624A**30	CNPV*1917A**	58MEB040−12	23,800	13.0	16.0
4609115	24ANB624A**30	CNPV*1917A**	58MEC060−12	23,800	13.0	16.0
4609110	24ANB624A**30	CNPV*1917A**	58MV(B,C)060−14	23,600	13.0	16.0

See notes on page 35

COMBINATION RATINGS CONTINUED

AHRI Ref. Number	Model Number	Indoor Coil Model Number	Furnace Model Number	Cooling Capacity	EER	SEER
4609113	24ANB624A**30	CNPV*1917A**	58PH*045−08	23,400	13.0	16.0
4609109	24ANB624A**30	CNPV*1917A**+TDR		23,400	11.5	14.0
4608880	24ANB624A**30	CNPV*2414A**	58CV(A,X)070−12	23,000	12.5	15.5
4608881	24ANB624A**30	CNPV*2414A**	58PH*045−08	23,200	12.5	15.5
4608879	24ANB624A**30	CNPV*2414A**+TDR		23,200	11.5	14.0
4609100	24ANB624A**30	CNPV*2417A**	58CV(A,X)070−12	23,000	12.5	15.5
4608884	24ANB624A**30	CNPV*2417A**	58CV(A,X)090−16	23,000	13.0	16.0
4609148	24ANB624A**30	CNPV*2417A**	58HDV040−−12	23,200	12.5	15.0
4609149	24ANB624A**30	CNPV*2417A**	58HDV060−−12	23,200	12.5	15.0
4608885	24ANB624A**30	CNPV*2417A**	58MEB040−12	23,400	13.0	16.0
4608886	24ANB624A**30	CNPV*2417A**	58MEC060−12	23,400	13.0	16.0
4608887	24ANB624A**30	CNPV*2417A**	58MEC080−12	23,200	13.0	16.0
4608883	24ANB624A**30	CNPV*2417A**	58MV(B,C)060−14	23,200	12.5	15.5
4609101	24ANB624A**30	CNPV*2417A**	58PH*045−08	23,200	12.5	15.5
4644711	24ANB624A**30	CNPV*2417A**	58UVB060−14	23,200	12.7	15.5
4612806	24ANB624A**30	CNPV*2417A**	OVLAAB036098	23,400	12.5	15.5
4609124	24ANB624A**30	CNPV*2417A**	OVMAAB036098	23,200	12.5	15.5
4609126	24ANB624A**30	CNPV*2417A**	OVMAAB042112	23,200	12.5	15.5
4608882	24ANB624A**30	CNPV*2417A**+TDR		23,200	11.5	14.0
4608889	24ANB624A**30	CNPV*3014A**	58CV(A,X)070−12	23,200	13.0	16.0
4608890	24ANB624A**30	CNPV*3014A**	58PH*045−08	23,400	12.5	15.5
4608888	24ANB624A**30	CNPV*3014A**+TDR		23,400	11.5	14.0
4609102	24ANB624A**30	CNPV*3017A**	58CV(A,X)070−12	23,200	13.0	16.0
4608893	24ANB624A**30	CNPV*3017A**	58CV(A,X)090−16	23,200	13.0	16.0
4609150	24ANB624A**30	CNPV*3017A**	58HDV040−−12	23,400	12.5	15.5
4609151	24ANB624A**30	CNPV*3017A**	58HDV060−−12	23,800	12.5	15.5
4608894	24ANB624A**30	CNPV*3017A**	58MEB040−12	23,800	13.0	16.0
4608895	24ANB624A**30	CNPV*3017A**	58MEC060−12	23,800	13.0	16.0
4608896	24ANB624A**30	CNPV*3017A**	58MEC080−12	23,600	13.0	16.0
4608892	24ANB624A**30	CNPV*3017A**	58MV(B,C)060−14	23,400	13.0	16.0
4609103	24ANB624A**30	CNPV*3017A**	58PH*045−08	23,400	13.0	16.0
4644712	24ANB624A**30	CNPV*3017A**	58UVB060−14	23,400	13.2	16.0
4612807	24ANB624A**30	CNPV*3017A**	OVLAAB036098	23,400	13.0	16.0
4609127	24ANB624A**30	CNPV*3017A**	OVMAAB036098	23,400	13.0	15.5
4609129	24ANB624A**30	CNPV*3017A**	OVMAAB042112	23,400	13.0	16.0
4608891	24ANB624A**30	CNPV*3017A**+TDR		23,400	11.5	14.0
4609104	24ANB624A**30	CNPV*3117A**	58CV(A,X)070−12	23,600	13.0	16.0
4608898	24ANB624A**30	CNPV*3117A**	58CV(A,X)090−16	23,600	13.0	16.0
4609152	24ANB624A**30	CNPV*3117A**	58HDV040−−12	24,000	13.0	16.0
4609153	24ANB624A**30	CNPV*3117A**	58HDV060−−12	24,000	13.0	16.0
4608899	24ANB624A**30	CNPV*3117A**	58MEB040−12	24,000	13.0	16.0
4608900	24ANB624A**30	CNPV*3117A**	58MEC060−12	24,000	13.0	16.0
4608901	24ANB624A**30	CNPV*3117A**	58MEC080−12	24,000	13.0	16.0
4608897	24ANB624A**30	CNPV*3117A**	58MV(B,C)060−14	24,000	13.0	16.0
4609105	24ANB624A**30	CNPV*3117A**	58PH*045−08	24,000	13.0	16.0
4644713	24ANB624A**30	CNPV*3117A**	58UVB060−14	24,000	13.2	16.0
4612808	24ANB624A**30	CNPV*3117A**	OVLAAB036098	23,800	13.0	16.0
4609130	24ANB624A**30	CNPV*3117A**	OVMAAB036098	23,800	13.0	16.0
4609132	24ANB624A**30	CNPV*3117A**	OVMAAB042112	23,800	13.0	16.0
4609046	24ANB624A**30	CNPV*3617A**	58CV(A,X)070−12	23,200	13.0	16.0
4609047	24ANB624A**30	CNPV*3617A**	58CV(A,X)090−16	23,200	13.0	16.0
4609049	24ANB624A**30	CNPV*3617A**	58MEB040−12	23,800	13.0	16.0
4609050	24ANB624A**30	CNPV*3617A**	58MEC060−12	23,800	13.0	16.0
4609051	24ANB624A**30	CNPV*3617A**	58MEC080−12	23,600	13.0	16.0
4609045	24ANB624A**30	CNPV*3617A**	58MV(B,C)060−14	23,400	13.0	16.0
4609048	24ANB624A**30	CNPV*3617A**	58PH*045−08	23,400	13.0	16.0
4609044	24ANB624A**30	CNPV*3617A**+TDR		23,400	11.5	14.0
4609057	24ANB624A**30	CNPV*3621A**	58CV(A,X)090−16	23,200	13.0	16.0
4609058	24ANB624A**30	CNPV*3621A**	58CV(A,X)110−20	23,200	13.0	16.0
4609059	24ANB624A**30	CNPV*3621A**	58MEB040−12	23,800	13.0	16.0
4609060	24ANB624A**30	CNPV*3621A**	58MEC060−12	23,800	13.0	16.0
4609061	24ANB624A**30	CNPV*3621A**	58MEC080−12	23,600	13.0	16.0
4609053	24ANB624A**30	CNPV*3621A**	58MV(B,C)060−14	23,400	13.0	16.0
4609054	24ANB624A**30	CNPV*3621A**	58MV(B,C)080−14	23,200	13.0	16.0
4609055	24ANB624A**30	CNPV*3621A**	58MV(B,C)080−20	23,000	13.0	16.0
4609056	24ANB624A**30	CNPV*3621A**	58MV(B,C)100−20	23,200	13.0	16.0
4609052	24ANB624A**30	CNPV*3621A**+TDR		23,400	11.5	14.0
4608968	24ANB624A**30	CSPH*2412A**	58CV(A,X)070−12	23,200	12.5	15.5
4608969	24ANB624A**30	CSPH*2412A**	58CV(A,X)090−16	23,400	13.0	16.0
4608970	24ANB624A**30	CSPH*2412A**	58CV(A,X)110−20	23,200	12.5	15.5
4608971	24ANB624A**30	CSPH*2412A**	58CV(A,X)135−22	23,400	12.5	16.0
4608972	24ANB624A**30	CSPH*2412A**	58CV(A,X)155−22	23,400	12.5	16.0
4608977	24ANB624A**30	CSPH*2412A**	58HDV040−−12	23,400	12.5	15.2
4608978	24ANB624A**30	CSPH*2412A**	58HDV060−−12	23,400	12.5	15.2
4608979	24ANB624A**30	CSPH*2412A**	58HDV080−−20	23,800	12.5	15.5
4608980	24ANB624A**30	CSPH*2412A**	58HDV100−−20	23,600	12.5	15.5
4608974	24ANB624A**30	CSPH*2412A**	58MEB040−12	23,600	13.0	16.0
4608975	24ANB624A**30	CSPH*2412A**	58MEC060−12	23,600	13.0	16.0
4608976	24ANB624A**30	CSPH*2412A**	58MEC080−12	23,400	13.0	16.0
4608963	24ANB624A**30	CSPH*2412A**	58MV(B,C)060−14	23,600	13.0	16.0

See notes on page 35

COMBINATION RATINGS CONTINUED

AHRI Ref. Number	Model Number	Indoor Coil Model Number	Furnace Model Number	Cooling Capacity	EER	SEER
4608964	24ANB624A**30	CSPH*2412A**	58MV(B,C)080−14	23,200	12.5	16.0
4608965	24ANB624A**30	CSPH*2412A**	58MV(B,C)080−20	23,000	12.5	16.0
4608966	24ANB624A**30	CSPH*2412A**	58MV(B,C)100−20	23,200	13.0	16.0
4608967	24ANB624A**30	CSPH*2412A**	58MV(B,C)120−20	23,400	13.0	16.0
4608962	24ANB624A**30	CSPH*2412A**	58MVB040−14	23,200	12.5	15.5
4608973	24ANB624A**30	CSPH*2412A**	58PH*045−08	23,400	12.5	15.5
4612812	24ANB624A**30	CSPH*2412A**	OVLAAB036098	23,400	12.5	15.5
4609142	24ANB624A**30	CSPH*2412A**	OVMAAB036098	23,400	12.5	15.5
4609144	24ANB624A**30	CSPH*2412A**	OVMAAB042112	23,400	12.5	15.5
4608961	24ANB624A**30	CSPH*2412A**+TDR		23,400	11.5	14.0
4608988	24ANB624A**30	CSPH*3012A**	58CV(A,X)070−12	23,200	13.0	16.0
4608989	24ANB624A**30	CSPH*3012A**	58CV(A,X)090−16	23,400	13.0	16.0
4608990	24ANB624A**30	CSPH*3012A**	58CV(A,X)110−20	23,400	13.0	16.0
4608991	24ANB624A**30	CSPH*3012A**	58CV(A,X)135−22	23,400	13.0	16.0
4608992	24ANB624A**30	CSPH*3012A**	58CV(A,X)155−22	23,400	13.0	16.0
4608997	24ANB624A**30	CSPH*3012A**	58HDV040−−12	23,600	12.5	15.5
4608998	24ANB624A**30	CSPH*3012A**	58HDV060−−12	23,800	12.5	15.5
4608999	24ANB624A**30	CSPH*3012A**	58HDV080−−20	24,000	13.0	16.0
4609000	24ANB624A**30	CSPH*3012A**	58HDV100−−20	24,000	13.0	16.0
4608994	24ANB624A**30	CSPH*3012A**	58MEB040−12	23,800	13.0	16.0
4608995	24ANB624A**30	CSPH*3012A**	58MEC060−12	23,800	13.0	16.0
4608996	24ANB624A**30	CSPH*3012A**	58MEC080−12	23,600	13.0	16.0
4608983	24ANB624A**30	CSPH*3012A**	58MV(B,C)060−14	23,600	13.0	16.0
4608984	24ANB624A**30	CSPH*3012A**	58MV(B,C)080−14	23,200	13.0	16.0
4608985	24ANB624A**30	CSPH*3012A**	58MV(B,C)080−20	23,000	13.0	16.0
4608986	24ANB624A**30	CSPH*3012A**	58MV(B,C)100−20	23,200	13.0	16.0
4608987	24ANB624A**30	CSPH*3012A**	58MV(B,C)120−20	23,400	13.0	16.0
4608982	24ANB624A**30	CSPH*3012A**	58MVB040−14	23,200	13.0	16.0
4608993	24ANB624A**30	CSPH*3012A**	58PH*045−08	23,400	13.0	16.0
4612813	24ANB624A**30	CSPH*3012A**	OVLAAB036098	23,600	13.0	15.5
4609145	24ANB624A**30	CSPH*3012A**	OVMAAB036098	23,600	13.0	15.5
4609147	24ANB624A**30	CSPH*3012A**	OVMAAB042112	23,400	13.0	16.0
4608981	24ANB624A**30	CSPH*3012A**+TDR		23,400	11.5	14.0
4609086	24ANB624A**30	CSPH*3612A**	58CV(A,X)070−12	23,600	13.0	16.0
4609087	24ANB624A**30	CSPH*3612A**	58CV(A,X)090−16	23,600	13.0	16.0
4609088	24ANB624A**30	CSPH*3612A**	58CV(A,X)110−20	23,600	13.0	16.0
4609089	24ANB624A**30	CSPH*3612A**	58CV(A,X)135−22	23,600	13.0	16.0
4609090	24ANB624A**30	CSPH*3612A**	58CV(A,X)155−22	23,600	13.0	16.0
4609093	24ANB624A**30	CSPH*3612A**	58MEB040−12	24,000	13.0	16.0
4609094	24ANB624A**30	CSPH*3612A**	58MEC060−12	24,000	13.0	16.0
4609095	24ANB624A**30	CSPH*3612A**	58MEC080−12	24,000	13.0	16.0
4609081	24ANB624A**30	CSPH*3612A**	58MV(B,C)060−14	24,000	13.0	16.0
4609082	24ANB624A**30	CSPH*3612A**	58MV(B,C)080−14	23,600	13.0	16.0
4609083	24ANB624A**30	CSPH*3612A**	58MV(B,C)080−20	23,400	13.0	16.0
4609084	24ANB624A**30	CSPH*3612A**	58MV(B,C)100−20	23,600	13.0	16.0
4609085	24ANB624A**30	CSPH*3612A**	58MV(B,C)120−20	23,800	13.0	16.0
4609080	24ANB624A**30	CSPH*3612A**	58MVB040−14	23,600	13.0	16.0
4609091	24ANB624A**30	CSPH*3612A**	58PH*045−08	23,800	13.0	16.0
4609079	24ANB624A**30	CSPH*3612A**+TDR		23,800	12.0	14.5
4609001	24ANB624A**30	FB4CNF024+TXV		23,000	12.0	15.0
4609002	24ANB624A**30	FB4CNF030+TXV		23,600	13.0	16.0
4609003	24ANB624A**30	FB4CNF036+TXV		23,000	11.2	13.5
4631259	24ANB624A**30	FE4AN(B,F)003+UI		23,400	13.0	16.0
4638117	24ANB624A**30	FE4ANF002+UI		23,400	13.0	16.0
4638118	24ANB624A**30	FE5ANB004+UI		24,200	13.5	16.0
4609009	24ANB624A**30	FF1ENP024		23,000	11.5	13.5
4609010	24ANB624A**30	FF1ENP025		23,400	12.5	15.0
4609011	24ANB624A**30	FF1ENP030		23,000	11.5	13.5
4609012	24ANB624A**30	FF1ENP031		23,400	12.5	15.0
4609108	24ANB624A**30	FF1ENP036		23,200	11.0	13.5
4609013	24ANB624A**30	FF1ENP037		23,600	12.5	15.5
4638120	24ANB624A**30	FV4CN(B,F)003		23,400	13.0	16.0
4638119	24ANB624A**30	FV4CNF002		23,400	13.0	16.0
4609007	24ANB624A**30	FX4DN(B,F)031		23,800	12.5	15.5
4609008	24ANB624A**30	FX4DN(B,F)037		24,000	13.0	16.0
4609006	24ANB624A**30	FX4DNF025		23,600	13.0	16.0
4609004	24ANB624A**30	FY5BNF024+TXV		23,400	12.0	15.0
4609005	24ANB624A**30	FY5BNF030+TXV		23,600	12.0	15.0
4609154	24ANB630A**30	†CNPV*3117A**+TDR		28,400	12.0	14.5
4609156	24ANB630A**30	CAP**3014A**	58CV(A,X)070−12	27,600	12.5	15.5
4609155	24ANB630A**30	CAP**3014A**+TDR		27,800	12.0	14.0
4609354	24ANB630A**30	CAP**3017A**	58CV(A,X)070−12	27,600	12.5	15.5
4609159	24ANB630A**30	CAP**3017A**	58CV(A,X)090−16	27,600	13.0	16.0
4609161	24ANB630A**30	CAP**3017A**	58MEB040−12	28,000	13.0	16.0
4609162	24ANB630A**30	CAP**3017A**	58MEC060−12	28,000	13.0	16.0
4609163	24ANB630A**30	CAP**3017A**	58MEC080−12	28,000	13.0	16.0
4609164	24ANB630A**30	CAP**3017A**	58MEC080−16	28,200	13.0	15.5
4609158	24ANB630A**30	CAP**3017A**	58MV(B,C)060−14	27,800	13.0	15.5
4609160	24ANB630A**30	CAP**3017A**	58PH*070−16	27,800	12.5	15.2

See notes on page 35

COMBINATION RATINGS CONTINUED

AHRI Ref. Number	Model Number	Indoor Coil Model Number	Furnace Model Number	Cooling Capacity	EER	SEER
4644714	24ANB630A**30	CAP**3017A**	58UVB060−14	27,800	13.0	15.5
4612814	24ANB630A**30	CAP**3017A**	OVLAAB036098	27,600	12.5	15.2
4609456	24ANB630A**30	CAP**3017A**	OVMAAB036098	27,800	12.5	15.0
4609458	24ANB630A**30	CAP**3017A**	OVMAAB042112	27,800	12.5	15.5
4609157	24ANB630A**30	CAP**3017A**+TDR		27,800	12.0	14.0
4609166	24ANB630A**30	CAP**3614A**	58CV(A,X)070−12	27,600	12.5	15.5
4609165	24ANB630A**30	CAP**3614A**+TDR		27,800	12.0	14.0
4609355	24ANB630A**30	CAP**3617A**	58CV(A,X)070−12	27,800	12.5	15.5
4609169	24ANB630A**30	CAP**3617A**	58CV(A,X)090−16	27,800	13.0	16.0
4609171	24ANB630A**30	CAP**3617A**	58MEB040−12	28,200	13.0	16.0
4609172	24ANB630A**30	CAP**3617A**	58MEC060−12	28,200	13.0	16.0
4609173	24ANB630A**30	CAP**3617A**	58MEC080−12	28,000	13.0	16.0
4609174	24ANB630A**30	CAP**3617A**	58MEC080−16	28,200	13.0	16.0
4609168	24ANB630A**30	CAP**3617A**	58MV(B,C)060−14	28,000	13.0	16.0
4609170	24ANB630A**30	CAP**3617A**	58PH*070−16	28,000	12.5	15.2
4644715	24ANB630A**30	CAP**3617A**	58UVB060−14	27,800	13.0	15.5
4612815	24ANB630A**30	CAP**3617A**	OVLAAB036098	27,800	12.5	15.2
4609459	24ANB630A**30	CAP**3617A**	OVMAAB036098	27,800	12.5	15.0
4609461	24ANB630A**30	CAP**3617A**	OVMAAB042112	28,000	12.5	15.5
4609167	24ANB630A**30	CAP**3617A**+TDR		27,800	12.0	14.0
4609182	24ANB630A**30	CAP**3619A**	58HDV040−−12	27,800	12.5	15.0
4609183	24ANB630A**30	CAP**3619A**	58HDV060−−12	28,000	12.5	15.2
4609181	24ANB630A**30	CAP**3619A**+TDR		27,800	11.5	14.0
4609357	24ANB630A**30	CAP**3621A**	58CV(A,X)090−16	27,800	13.0	16.0
4609179	24ANB630A**30	CAP**3621A**	58CV(A,X)110−20	27,800	13.0	16.0
4609359	24ANB630A**30	CAP**3621A**	58MEB040−12	28,200	13.0	16.0
4609360	24ANB630A**30	CAP**3621A**	58MEC060−12	28,200	13.0	16.0
4609361	24ANB630A**30	CAP**3621A**	58MEC080−12	28,200	13.0	16.0
4609362	24ANB630A**30	CAP**3621A**	58MEC080−16	28,400	13.0	16.0
4609356	24ANB630A**30	CAP**3621A**	58MV(B,C)060−14	28,000	13.0	16.0
4609176	24ANB630A**30	CAP**3621A**	58MV(B,C)080−14	27,600	13.0	16.0
4609177	24ANB630A**30	CAP**3621A**	58MV(B,C)080−20	27,800	13.0	16.0
4609178	24ANB630A**30	CAP**3621A**	58MV(B,C)100−20	27,600	13.0	15.5
4609358	24ANB630A**30	CAP**3621A**	58PH*070−16	28,000	12.5	15.5
4609180	24ANB630A**30	CAP**3621A**	58PH*090−16	28,200	13.0	16.0
4644716	24ANB630A**30	CAP**3621A**	58UVB080−14	27,600	13.0	15.5
4644717	24ANB630A**30	CAP**3621A**	58UVB080−20	27,800	13.0	15.5
4644718	24ANB630A**30	CAP**3621A**	58UVB100−20	27,600	13.0	15.5
4609462	24ANB630A**30	CAP**3621A**	OVLAAB048112	28,000	12.5	15.5
4609175	24ANB630A**30	CAP**3621A**+TDR		27,800	12.0	14.0
4609368	24ANB630A**30	CAP**4221A**	58CV(A,X)090−16	28,000	13.0	16.0
4609369	24ANB630A**30	CAP**4221A**	58CV(A,X)110−20	28,000	13.0	16.0
4609372	24ANB630A**30	CAP**4221A**	58MEB040−12	28,400	13.0	16.0
4609373	24ANB630A**30	CAP**4221A**	58MEC060−12	28,400	13.0	16.0
4609374	24ANB630A**30	CAP**4221A**	58MEC080−12	28,400	13.0	16.0
4609375	24ANB630A**30	CAP**4221A**	58MEC080−16	28,600	13.0	16.0
4609364	24ANB630A**30	CAP**4221A**	58MV(B,C)060−14	28,000	13.0	16.0
4609365	24ANB630A**30	CAP**4221A**	58MV(B,C)080−14	27,800	13.0	16.0
4609366	24ANB630A**30	CAP**4221A**	58MV(B,C)080−20	28,000	13.0	16.0
4609367	24ANB630A**30	CAP**4221A**	58MV(B,C)100−20	27,800	13.0	16.0
4609370	24ANB630A**30	CAP**4221A**	58PH*070−16	28,200	12.5	15.5
4609371	24ANB630A**30	CAP**4221A**	58PH*090−16	28,400	13.0	16.0
4609363	24ANB630A**30	CAP**4221A**+TDR		28,000	11.5	14.0
4609382	24ANB630A**30	CAP**4224A**	58CV(A,X)110−20	28,000	13.0	16.0
4609383	24ANB630A**30	CAP**4224A**	58CV(A,X)135−22	28,000	13.0	16.0
4609384	24ANB630A**30	CAP**4224A**	58CV(A,X)155−22	28,000	13.0	16.0
4609378	24ANB630A**30	CAP**4224A**	58MV(B,C)080−14	27,800	13.0	16.0
4609379	24ANB630A**30	CAP**4224A**	58MV(B,C)080−20	28,000	13.0	16.0
4609380	24ANB630A**30	CAP**4224A**	58MV(B,C)100−20	27,800	13.0	16.0
4609381	24ANB630A**30	CAP**4224A**	58MV(B,C)120−20	28,000	13.0	16.0
4609377	24ANB630A**30	CAP**4224A**	58MVB040−14	27,800	13.0	16.0
4609385	24ANB630A**30	CAP**4224A**	58PH*090−16	28,400	13.0	16.0
4609376	24ANB630A**30	CAP**4224A**+TDR		28,000	11.5	14.0
4609290	24ANB630A**30	CNPF*3618A**+TDR		27,800	11.5	14.0
4609231	24ANB630A**30	CNPH*3017A**	58CV(A,X)070−12	27,600	12.5	15.5
4609232	24ANB630A**30	CNPH*3017A**	58CV(A,X)090−16	27,800	13.0	15.5
4609233	24ANB630A**30	CNPH*3017A**	58CV(A,X)110−20	27,800	13.0	15.5
4609234	24ANB630A**30	CNPH*3017A**	58CV(A,X)135−22	27,800	13.0	16.0
4609235	24ANB630A**30	CNPH*3017A**	58CV(A,X)155−22	27,800	13.0	16.0
4609242	24ANB630A**30	CNPH*3017A**	58HDV040−−12	27,800	12.0	15.0
4609243	24ANB630A**30	CNPH*3017A**	58HDV060−−12	27,800	12.0	15.0
4609244	24ANB630A**30	CNPH*3017A**	58HDV080−−20	28,200	12.5	15.5
4609245	24ANB630A**30	CNPH*3017A**	58HDV100−−20	28,000	12.5	15.5
4609238	24ANB630A**30	CNPH*3017A**	58MEB040−12	28,000	13.0	16.0
4609239	24ANB630A**30	CNPH*3017A**	58MEC060−12	28,000	13.0	15.5
4609240	24ANB630A**30	CNPH*3017A**	58MEC080−12	28,000	13.0	16.0
4609241	24ANB630A**30	CNPH*3017A**	58MEC080−16	28,200	13.0	15.5
4609226	24ANB630A**30	CNPH*3017A**	58MV(B,C)060−14	27,800	13.0	15.5
4609227	24ANB630A**30	CNPH*3017A**	58MV(B,C)080−14	27,600	12.5	15.5
4609228	24ANB630A**30	CNPH*3017A**	58MV(B,C)080−20	27,600	12.5	15.5

See notes on page 35

COMBINATION RATINGS CONTINUED

AHRI Ref. Number	Model Number	Indoor Coil Model Number	Furnace Model Number	Cooling Capacity	EER	SEER
4609229	24ANB630A**30	CNPH*3017A**	58MV(B,C)100−20	27,400	12.5	15.5
4609230	24ANB630A**30	CNPH*3017A**	58MV(B,C)120−20	27,800	13.0	16.0
4609225	24ANB630A**30	CNPH*3017A**	58MVB040−14	27,600	12.5	15.5
4609236	24ANB630A**30	CNPH*3017A**	58PH*070−16	27,800	12.5	15.0
4609237	24ANB630A**30	CNPH*3017A**	58PH*090−16	27,800	12.5	15.5
4612820	24ANB630A**30	CNPH*3017A**	OVLAAB036098	27,800	12.5	15.0
4609479	24ANB630A**30	CNPH*3017A**	OVLAAB048112	28,000	12.5	15.2
4609476	24ANB630A**30	CNPH*3017A**	OVMAAB036098	27,800	12.5	15.0
4609478	24ANB630A**30	CNPH*3017A**	OVMAAB042112	27,800	12.5	15.5
4609224	24ANB630A**30	CNPH*3017A**+TDR		27,800	12.0	14.0
4609253	24ANB630A**30	CNPH*3117A**	58CV(A,X)070−12	28,200	13.0	16.0
4609254	24ANB630A**30	CNPH*3117A**	58CV(A,X)090−16	28,200	13.0	16.0
4609255	24ANB630A**30	CNPH*3117A**	58CV(A,X)110−20	28,400	13.0	16.0
4609256	24ANB630A**30	CNPH*3117A**	58CV(A,X)135−22	28,400	13.0	16.0
4609257	24ANB630A**30	CNPH*3117A**	58CV(A,X)155−22	28,400	13.0	16.0
4609264	24ANB630A**30	CNPH*3117A**	58HDV040−−12	28,400	12.5	15.0
4609265	24ANB630A**30	CNPH*3117A**	58HDV060−−12	28,600	12.5	15.5
4609266	24ANB630A**30	CNPH*3117A**	58HDV080−−20	28,800	13.0	16.0
4609267	24ANB630A**30	CNPH*3117A**	58HDV100−−20	28,600	13.0	16.0
4609260	24ANB630A**30	CNPH*3117A**	58MEB040−12	28,600	13.0	16.0
4609261	24ANB630A**30	CNPH*3117A**	58MEC060−12	28,800	13.0	16.0
4609262	24ANB630A**30	CNPH*3117A**	58MEC080−12	28,600	13.0	16.0
4609263	24ANB630A**30	CNPH*3117A**	58MEC080−16	28,800	13.0	16.0
4609248	24ANB630A**30	CNPH*3117A**	58MV(B,C)060−14	28,400	13.0	16.0
4609249	24ANB630A**30	CNPH*3117A**	58MV(B,C)080−14	28,200	13.0	16.0
4609250	24ANB630A**30	CNPH*3117A**	58MV(B,C)080−20	28,200	13.0	16.0
4609251	24ANB630A**30	CNPH*3117A**	58MV(B,C)100−20	28,000	13.0	16.0
4609252	24ANB630A**30	CNPH*3117A**	58MV(B,C)120−20	28,400	13.0	16.0
4609247	24ANB630A**30	CNPH*3117A**	58MVB040−14	28,200	13.0	16.0
4609258	24ANB630A**30	CNPH*3117A**	58PH*070−16	28,400	13.0	15.5
4609259	24ANB630A**30	CNPH*3117A**	58PH*090−16	28,600	13.0	16.0
4612821	24ANB630A**30	CNPH*3117A**	OVLAAB036098	28,400	13.0	15.5
4609483	24ANB630A**30	CNPH*3117A**	OVLAAB048112	28,600	13.0	16.0
4609480	24ANB630A**30	CNPH*3117A**	OVMAAB036098	28,400	12.5	15.5
4609482	24ANB630A**30	CNPH*3117A**	OVMAAB042112	28,400	13.0	16.0
4609246	24ANB630A**30	CNPH*3117A**+TDR		28,400	12.0	14.5
4609275	24ANB630A**30	CNPH*3617A**	58CV(A,X)070−12	27,600	12.5	15.5
4609276	24ANB630A**30	CNPH*3617A**	58CV(A,X)090−16	27,800	13.0	15.5
4609277	24ANB630A**30	CNPH*3617A**	58CV(A,X)110−20	27,800	13.0	15.5
4609278	24ANB630A**30	CNPH*3617A**	58CV(A,X)135−22	27,800	13.0	16.0
4609279	24ANB630A**30	CNPH*3617A**	58CV(A,X)155−22	27,800	13.0	16.0
4609286	24ANB630A**30	CNPH*3617A**	58HDV040−−12	27,800	12.0	15.0
4609287	24ANB630A**30	CNPH*3617A**	58HDV060−−12	27,800	12.0	15.0
4609288	24ANB630A**30	CNPH*3617A**	58HDV080−−20	28,200	12.5	15.5
4609289	24ANB630A**30	CNPH*3617A**	58HDV100−−20	28,000	12.5	15.5
4609282	24ANB630A**30	CNPH*3617A**	58MEB040−12	28,000	13.0	16.0
4609283	24ANB630A**30	CNPH*3617A**	58MEC060−12	28,000	13.0	15.5
4609284	24ANB630A**30	CNPH*3617A**	58MEC080−12	28,000	13.0	16.0
4609285	24ANB630A**30	CNPH*3617A**	58MEC080−16	28,200	13.0	15.5
4609270	24ANB630A**30	CNPH*3617A**	58MV(B,C)060−14	27,800	13.0	15.5
4609271	24ANB630A**30	CNPH*3617A**	58MV(B,C)080−14	27,600	12.5	15.5
4609272	24ANB630A**30	CNPH*3617A**	58MV(B,C)080−20	27,600	12.5	15.5
4609273	24ANB630A**30	CNPH*3617A**	58MV(B,C)100−20	27,400	12.5	15.5
4609274	24ANB630A**30	CNPH*3617A**	58MV(B,C)120−20	27,800	13.0	16.0
4609269	24ANB630A**30	CNPH*3617A**	58MVB040−14	27,600	12.5	15.5
4609280	24ANB630A**30	CNPH*3617A**	58PH*070−16	27,800	12.5	15.2
4609281	24ANB630A**30	CNPH*3617A**	58PH*090−16	27,800	12.5	15.5
4612822	24ANB630A**30	CNPH*3617A**	OVLAAB036098	27,800	12.5	15.0
4609487	24ANB630A**30	CNPH*3617A**	OVLAAB048112	28,000	12.5	15.2
4609484	24ANB630A**30	CNPH*3617A**	OVMAAB036098	27,800	12.5	15.0
4609486	24ANB630A**30	CNPH*3617A**	OVMAAB042112	27,800	12.5	15.5
4609268	24ANB630A**30	CNPH*3617A**+TDR		27,800	12.0	14.0
4609425	24ANB630A**30	CNPH*4221A**	58CV(A,X)070−12	28,000	13.0	15.5
4609426	24ANB630A**30	CNPH*4221A**	58CV(A,X)090−16	28,000	13.0	16.0
4609427	24ANB630A**30	CNPH*4221A**	58CV(A,X)110−20	28,000	13.0	16.0
4609428	24ANB630A**30	CNPH*4221A**	58CV(A,X)135−22	28,000	13.0	16.0
4609429	24ANB630A**30	CNPH*4221A**	58CV(A,X)155−22	28,000	13.0	16.0
4609432	24ANB630A**30	CNPH*4221A**	58MEB040−12	28,400	13.0	16.0
4609433	24ANB630A**30	CNPH*4221A**	58MEC060−12	28,400	13.0	16.0
4609434	24ANB630A**30	CNPH*4221A**	58MEC080−12	28,200	13.0	16.0
4609435	24ANB630A**30	CNPH*4221A**	58MEC080−16	28,400	13.0	16.0
4609420	24ANB630A**30	CNPH*4221A**	58MV(B,C)060−14	28,200	13.0	16.0
4609421	24ANB630A**30	CNPH*4221A**	58MV(B,C)080−14	27,800	13.0	15.5
4609422	24ANB630A**30	CNPH*4221A**	58MV(B,C)080−20	28,000	13.0	16.0
4609423	24ANB630A**30	CNPH*4221A**	58MV(B,C)100−20	27,800	13.0	15.5
4609424	24ANB630A**30	CNPH*4221A**	58MV(B,C)120−20	28,000	13.0	16.0
4609419	24ANB630A**30	CNPH*4221A**	58MVB040−14	27,800	13.0	15.5
4609430	24ANB630A**30	CNPH*4221A**	58PH*070−16	28,200	12.5	15.5
4609431	24ANB630A**30	CNPH*4221A**	58PH*090−16	28,200	13.0	16.0
4609418	24ANB630A**30	CNPH*4221A**+TDR		28,200	11.5	14.0

See notes on page 35

COMBINATION RATINGS CONTINUED

AHRI Ref. Number	Model Number	Indoor Coil Model Number	Furnace Model Number	Cooling Capacity	EER	SEER
4609185	24ANB630A**30	CNPV*3014A**	58CV(A,X)070−12	27,600	12.5	15.2
4609184	24ANB630A**30	CNPV*3014A**+TDR		27,800	12.0	14.0
4609386	24ANB630A**30	CNPV*3017A**	58CV(A,X)070−12	27,600	12.5	15.5
4609188	24ANB630A**30	CNPV*3017A**	58CV(A,X)090−16	27,800	13.0	15.5
4609496	24ANB630A**30	CNPV*3017A**	58HDV040−−12	27,800	12.5	15.0
4609497	24ANB630A**30	CNPV*3017A**	58HDV060−−12	27,800	12.5	15.0
4609190	24ANB630A**30	CNPV*3017A**	58MEB040−12	28,000	13.0	16.0
4609191	24ANB630A**30	CNPV*3017A**	58MEC060−12	28,000	13.0	15.5
4609192	24ANB630A**30	CNPV*3017A**	58MEC080−12	28,000	13.0	16.0
4609193	24ANB630A**30	CNPV*3017A**	58MEC080−16	28,200	13.0	15.5
4609187	24ANB630A**30	CNPV*3017A**	58MV(B,C)060−14	27,800	13.0	15.5
4609189	24ANB630A**30	CNPV*3017A**	58PH*070−16	27,800	12.5	15.0
4644719	24ANB630A**30	CNPV*3017A**	58UVB060−14	27,800	13.0	15.5
4612816	24ANB630A**30	CNPV*3017A**	OVLAAB036098	27,800	12.5	15.0
4609463	24ANB630A**30	CNPV*3017A**	OVMAAB036098	27,800	12.5	15.0
4609465	24ANB630A**30	CNPV*3017A**	OVMAAB042112	27,800	12.5	15.5
4609186	24ANB630A**30	CNPV*3017A**+TDR		27,800	12.0	14.0
4609387	24ANB630A**30	CNPV*3117A**	58CV(A,X)070−12	28,200	13.0	16.0
4609195	24ANB630A**30	CNPV*3117A**	58CV(A,X)090−16	28,200	13.0	16.0
4609498	24ANB630A**30	CNPV*3117A**	58HDV040−−12	28,400	12.5	15.0
4609499	24ANB630A**30	CNPV*3117A**	58HDV060−−12	28,600	12.5	15.2
4609197	24ANB630A**30	CNPV*3117A**	58MEB040−12	28,600	13.0	16.0
4609198	24ANB630A**30	CNPV*3117A**	58MEC060−12	28,800	13.0	16.0
4609199	24ANB630A**30	CNPV*3117A**	58MEC080−12	28,600	13.0	16.0
4609200	24ANB630A**30	CNPV*3117A**	58MEC080−16	28,800	13.0	16.0
4609194	24ANB630A**30	CNPV*3117A**	58MV(B,C)060−14	28,400	13.0	16.0
4609196	24ANB630A**30	CNPV*3117A**	58PH*070−16	28,400	13.0	15.5
4644720	24ANB630A**30	CNPV*3117A**	58UVB060−14	28,400	13.0	16.0
4612817	24ANB630A**30	CNPV*3117A**	OVLAAB036098	28,400	13.0	15.5
4609466	24ANB630A**30	CNPV*3117A**	OVMAAB036098	28,400	13.0	15.5
4609468	24ANB630A**30	CNPV*3117A**	OVMAAB042112	28,400	13.0	16.0
4609388	24ANB630A**30	CNPV*3617A**	58CV(A,X)070−12	27,600	12.5	15.5
4609203	24ANB630A**30	CNPV*3617A**	58CV(A,X)090−16	27,800	13.0	15.5
4609500	24ANB630A**30	CNPV*3617A**	58HDV040−−12	27,800	12.5	15.0
4609501	24ANB630A**30	CNPV*3617A**	58HDV060−−12	27,800	12.5	15.0
4609205	24ANB630A**30	CNPV*3617A**	58MEB040−12	28,000	13.0	16.0
4609206	24ANB630A**30	CNPV*3617A**	58MEC060−12	28,000	13.0	15.5
4609207	24ANB630A**30	CNPV*3617A**	58MEC080−12	28,000	13.0	16.0
4609208	24ANB630A**30	CNPV*3617A**	58MEC080−16	28,200	13.0	15.5
4609202	24ANB630A**30	CNPV*3617A**	58MV(B,C)060−14	27,800	13.0	15.5
4609204	24ANB630A**30	CNPV*3617A**	58PH*070−16	27,800	12.5	15.0
4644721	24ANB630A**30	CNPV*3617A**	58UVB060−14	27,800	13.0	15.5
4612818	24ANB630A**30	CNPV*3617A**	OVLAAB036098	27,800	12.5	15.0
4609469	24ANB630A**30	CNPV*3617A**	OVMAAB036098	27,800	12.5	15.0
4609471	24ANB630A**30	CNPV*3617A**	OVMAAB042112	27,800	12.5	15.5
4609201	24ANB630A**30	CNPV*3617A**+TDR		27,800	12.0	14.0
4609390	24ANB630A**30	CNPV*3621A**	58CV(A,X)090−16	27,800	13.0	16.0
4609213	24ANB630A**30	CNPV*3621A**	58CV(A,X)110−20	27,800	13.0	15.5
4609502	24ANB630A**30	CNPV*3621A**	58HDV040−−12	27,800	12.5	15.0
4609503	24ANB630A**30	CNPV*3621A**	58HDV060−−12	27,800	12.5	15.0
4609504	24ANB630A**30	CNPV*3621A**	58HDV080−−20	28,200	12.5	15.5
4609392	24ANB630A**30	CNPV*3621A**	58MEB040−12	28,000	13.0	16.0
4609393	24ANB630A**30	CNPV*3621A**	58MEC060−12	28,000	13.0	15.5
4609394	24ANB630A**30	CNPV*3621A**	58MEC080−12	28,000	13.0	16.0
4609395	24ANB630A**30	CNPV*3621A**	58MEC080−16	28,200	13.0	15.5
4609389	24ANB630A**30	CNPV*3621A**	58MV(B,C)060−14	27,800	13.0	15.5
4609210	24ANB630A**30	CNPV*3621A**	58MV(B,C)080−14	27,600	12.5	15.5
4609211	24ANB630A**30	CNPV*3621A**	58MV(B,C)080−20	27,600	12.5	15.5
4609212	24ANB630A**30	CNPV*3621A**	58MV(B,C)100−20	27,400	12.5	15.5
4609391	24ANB630A**30	CNPV*3621A**	58PH*070−16	27,800	12.5	15.0
4609214	24ANB630A**30	CNPV*3621A**	58PH*090−16	27,800	12.5	15.5
4644722	24ANB630A**30	CNPV*3621A**	58UVB080−14	27,600	12.7	15.5
4644723	24ANB630A**30	CNPV*3621A**	58UVB080−20	27,600	12.7	15.5
4644724	24ANB630A**30	CNPV*3621A**	58UVB100−20	27,400	12.7	15.5
4609472	24ANB630A**30	CNPV*3621A**	OVLAAB048112	28,000	12.5	15.2
4609209	24ANB630A**30	CNPV*3621A**+TDR		27,800	12.0	14.0
4609217	24ANB630A**30	CNPV*3717A**	58CV(A,X)090−16	28,600	13.0	16.0
4609505	24ANB630A**30	CNPV*3717A**	58HDV040−−12	28,600	13.0	15.5
4609506	24ANB630A**30	CNPV*3717A**	58HDV060−−12	29,000	13.0	15.5
4609219	24ANB630A**30	CNPV*3717A**	58MEB040−12	29,000	13.5	16.0
4609220	24ANB630A**30	CNPV*3717A**	58MEC060−12	29,000	13.5	16.0
4609221	24ANB630A**30	CNPV*3717A**	58MEC080−12	29,000	13.5	16.0
4609223	24ANB630A**30	CNPV*3717A**	58MEC080−16	29,200	13.0	16.0
4609216	24ANB630A**30	CNPV*3717A**	58MV(B,C)060−14	28,800	13.0	16.0
4609218	24ANB630A**30	CNPV*3717A**	58PH*070−16	28,800	13.0	16.0
4644725	24ANB630A**30	CNPV*3717A**	58UVB060−14	28,800	13.5	16.0
4612819	24ANB630A**30	CNPV*3717A**	OVLAAB036098	28,600	13.0	16.0
4609473	24ANB630A**30	CNPV*3717A**	OVMAAB036098	28,600	13.0	15.5
4609475	24ANB630A**30	CNPV*3717A**	OVMAAB042112	28,800	13.0	16.0
4609215	24ANB630A**30	CNPV*3717A**+TDR		28,800	12.0	14.5

See notes on page 35

COMBINATION RATINGS CONTINUED

AHRI Ref. Number	Model Number	Indoor Coil Model Number	Furnace Model Number	Cooling Capacity	EER	SEER
4609398	24ANB630A**30	CNPV*4217A**	58CV(A,X)070−12	28,000	13.0	16.0
4609399	24ANB630A**30	CNPV*4217A**	58CV(A,X)090−16	28,200	13.0	16.0
4609401	24ANB630A**30	CNPV*4217A**	58MEB040−12	28,600	13.0	16.0
4609402	24ANB630A**30	CNPV*4217A**	58MEC060−12	28,600	13.0	16.0
4609403	24ANB630A**30	CNPV*4217A**	58MEC080−12	28,400	13.0	16.0
4609404	24ANB630A**30	CNPV*4217A**	58MEC080−16	28,600	13.0	16.0
4609397	24ANB630A**30	CNPV*4217A**	58MV(B,C)060−14	28,200	13.0	16.0
4609400	24ANB630A**30	CNPV*4217A**	58PH*070−16	28,400	13.0	15.5
4609396	24ANB630A**30	CNPV*4217A**+TDR		28,400	12.0	14.0
4609410	24ANB630A**30	CNPV*4221A**	58CV(A,X)090−16	28,000	13.0	16.0
4609411	24ANB630A**30	CNPV*4221A**	58CV(A,X)110−20	28,000	13.0	16.0
4609414	24ANB630A**30	CNPV*4221A**	58MEB040−12	28,400	13.0	16.0
4609415	24ANB630A**30	CNPV*4221A**	58MEC060−12	28,400	13.0	16.0
4609416	24ANB630A**30	CNPV*4221A**	58MEC080−12	28,200	13.0	16.0
4609417	24ANB630A**30	CNPV*4221A**	58MEC080−16	28,400	13.0	16.0
4609406	24ANB630A**30	CNPV*4221A**	58MV(B,C)060−14	28,200	13.0	16.0
4609407	24ANB630A**30	CNPV*4221A**	58MV(B,C)080−14	27,800	13.0	15.5
4609408	24ANB630A**30	CNPV*4221A**	58MV(B,C)080−20	28,000	13.0	16.0
4609409	24ANB630A**30	CNPV*4221A**	58MV(B,C)100−20	27,800	13.0	15.5
4609412	24ANB630A**30	CNPV*4221A**	58PH*070−16	28,200	12.5	15.5
4609413	24ANB630A**30	CNPV*4221A**	58PH*090−16	28,200	13.0	16.0
4609405	24ANB630A**30	CNPV*4221A**+TDR		28,200	11.5	14.0
4609298	24ANB630A**30	CSPH*3012A**	58CV(A,X)070−12	27,800	12.5	15.5
4609299	24ANB630A**30	CSPH*3012A**	58CV(A,X)090−16	27,800	13.0	15.5
4609300	24ANB630A**30	CSPH*3012A**	58CV(A,X)110−20	27,800	13.0	15.5
4609301	24ANB630A**30	CSPH*3012A**	58CV(A,X)135−22	27,800	13.0	15.5
4609302	24ANB630A**30	CSPH*3012A**	58CV(A,X)155−22	27,800	13.0	16.0
4609309	24ANB630A**30	CSPH*3012A**	58HDV040−−12	27,800	12.5	15.0
4609310	24ANB630A**30	CSPH*3012A**	58HDV060−−12	27,800	12.5	15.0
4609311	24ANB630A**30	CSPH*3012A**	58HDV080−−20	28,200	12.5	15.5
4609312	24ANB630A**30	CSPH*3012A**	58HDV100−−20	28,000	12.5	15.5
4609305	24ANB630A**30	CSPH*3012A**	58MEB040−12	28,000	13.0	16.0
4609306	24ANB630A**30	CSPH*3012A**	58MEC060−12	28,000	13.0	15.5
4609307	24ANB630A**30	CSPH*3012A**	58MEC080−12	28,000	13.0	16.0
4609308	24ANB630A**30	CSPH*3012A**	58MEC080−16	28,200	13.0	15.5
4609293	24ANB630A**30	CSPH*3012A**	58MV(B,C)060−14	28,000	13.0	15.5
4609294	24ANB630A**30	CSPH*3012A**	58MV(B,C)080−14	27,600	12.5	15.5
4609295	24ANB630A**30	CSPH*3012A**	58MV(B,C)080−20	27,800	12.5	15.5
4609296	24ANB630A**30	CSPH*3012A**	58MV(B,C)100−20	27,600	12.5	15.5
4609297	24ANB630A**30	CSPH*3012A**	58MV(B,C)120−20	27,800	13.0	16.0
4609292	24ANB630A**30	CSPH*3012A**	58MVB040−14	27,800	12.5	15.5
4609303	24ANB630A**30	CSPH*3012A**	58PH*070−16	27,800	12.5	15.2
4609304	24ANB630A**30	CSPH*3012A**	58PH*090−16	27,800	12.5	15.5
4612823	24ANB630A**30	CSPH*3012A**	OVLAAB036098	27,800	12.5	15.0
4609491	24ANB630A**30	CSPH*3012A**	OVLAAB048112	28,000	12.5	15.2
4609488	24ANB630A**30	CSPH*3012A**	OVMAAB036098	27,800	12.5	15.0
4609490	24ANB630A**30	CSPH*3012A**	OVMAAB042112	28,000	12.5	15.5
4609291	24ANB630A**30	CSPH*3012A**+TDR		28,000	11.5	14.0
4609320	24ANB630A**30	CSPH*3612A**	58CV(A,X)070−12	28,200	13.0	16.0
4609321	24ANB630A**30	CSPH*3612A**	58CV(A,X)090−16	28,200	13.0	16.0
4609322	24ANB630A**30	CSPH*3612A**	58CV(A,X)110−20	28,400	13.0	16.0
4609323	24ANB630A**30	CSPH*3612A**	58CV(A,X)135−22	28,400	13.0	16.0
4609324	24ANB630A**30	CSPH*3612A**	58CV(A,X)155−22	28,400	13.0	16.0
4609331	24ANB630A**30	CSPH*3612A**	58HDV040−−12	28,400	12.5	15.0
4609332	24ANB630A**30	CSPH*3612A**	58HDV060−−12	28,600	12.5	15.5
4609333	24ANB630A**30	CSPH*3612A**	58HDV080−−20	28,800	13.0	16.0
4609334	24ANB630A**30	CSPH*3612A**	58HDV100−−20	28,600	13.0	16.0
4609327	24ANB630A**30	CSPH*3612A**	58MEB040−12	28,600	13.0	16.0
4609328	24ANB630A**30	CSPH*3612A**	58MEC060−12	28,600	13.0	16.0
4609329	24ANB630A**30	CSPH*3612A**	58MEC080−12	28,600	13.0	16.0
4609330	24ANB630A**30	CSPH*3612A**	58MEC080−16	28,800	13.0	16.0
4609315	24ANB630A**30	CSPH*3612A**	58MV(B,C)060−14	28,400	13.0	16.0
4609316	24ANB630A**30	CSPH*3612A**	58MV(B,C)080−14	28,200	13.0	16.0
4609317	24ANB630A**30	CSPH*3612A**	58MV(B,C)080−20	28,200	13.0	16.0
4609318	24ANB630A**30	CSPH*3612A**	58MV(B,C)100−20	28,000	13.0	16.0
4609319	24ANB630A**30	CSPH*3612A**	58MV(B,C)120−20	28,200	13.0	16.0
4609314	24ANB630A**30	CSPH*3612A**	58MVB040−14	28,200	13.0	16.0
4609325	24ANB630A**30	CSPH*3612A**	58PH*070−16	28,400	13.0	15.5
4609326	24ANB630A**30	CSPH*3612A**	58PH*090−16	28,600	13.0	16.0
4612824	24ANB630A**30	CSPH*3612A**	OVLAAB036098	28,200	13.0	15.5
4609495	24ANB630A**30	CSPH*3612A**	OVLAAB048112	28,600	12.5	15.5
4609492	24ANB630A**30	CSPH*3612A**	OVMAAB036098	28,400	12.5	15.5
4609494	24ANB630A**30	CSPH*3612A**	OVMAAB042112	28,400	13.0	16.0
4609313	24ANB630A**30	CSPH*3612A**+TDR		28,400	12.0	14.0
4609443	24ANB630A**30	CSPH*4212A**	58CV(A,X)070−12	28,400	13.0	16.0
4609444	24ANB630A**30	CSPH*4212A**	58CV(A,X)090−16	28,400	13.0	16.0
4609445	24ANB630A**30	CSPH*4212A**	58CV(A,X)110−20	28,400	13.0	16.0
4609446	24ANB630A**30	CSPH*4212A**	58CV(A,X)135−22	28,400	13.0	16.0
4609447	24ANB630A**30	CSPH*4212A**	58CV(A,X)155−22	28,400	13.0	16.0
4609450	24ANB630A**30	CSPH*4212A**	58MEB040−12	28,800	13.0	16.0

See notes on page 35

COMBINATION RATINGS CONTINUED

AHRI Ref. Number	Model Number	Indoor Coil Model Number	Furnace Model Number	Cooling Capacity	EER	SEER
4609451	24ANB630A**30	CSPH*4212A**	58MEC060−12	28,800	13.0	16.0
4609452	24ANB630A**30	CSPH*4212A**	58MEC080−12	28,800	13.0	16.0
4609453	24ANB630A**30	CSPH*4212A**	58MEC080−16	29,000	13.0	16.0
4609438	24ANB630A**30	CSPH*4212A**	58MV(B,C)060−14	28,600	13.0	16.0
4609439	24ANB630A**30	CSPH*4212A**	58MV(B,C)080−14	28,200	13.0	16.0
4609440	24ANB630A**30	CSPH*4212A**	58MV(B,C)080−20	28,400	13.0	16.0
4609441	24ANB630A**30	CSPH*4212A**	58MV(B,C)100−20	28,200	13.0	16.0
4609442	24ANB630A**30	CSPH*4212A**	58MV(B,C)120−20	28,400	13.0	16.0
4609437	24ANB630A**30	CSPH*4212A**	58MVB040−14	28,400	13.0	16.0
4609448	24ANB630A**30	CSPH*4212A**	58PH*070−16	28,600	13.0	16.0
4609449	24ANB630A**30	CSPH*4212A**	58PH*090−16	28,800	13.0	16.0
4609436	24ANB630A**30	CSPH*4212A**+TDR		28,600	12.0	14.0
4609335	24ANB630A**30	FB4CNF030+TXV		28,000	12.5	15.0
4609336	24ANB630A**30	FB4CNF036+TXV		28,000	12.5	15.0
4609337	24ANB630A**30	FB4CNF042+TXV		28,400	12.0	14.5
4638122	24ANB630A**30	FE4AN(B,F)003+UI		28,000	13.0	16.0
4638123	24ANB630A**30	FE4AN(B,F)005+UI		28,600	13.0	16.5
4638121	24ANB630A**30	FE4ANF002+UI		28,000	13.0	16.0
4638124	24ANB630A**30	FE5ANB004+UI		29,000	13.0	16.5
4609343	24ANB630A**30	FF1ENP030		27,600	12.0	14.0
4609344	24ANB630A**30	FF1ENP031		28,000	12.5	15.2
4609345	24ANB630A**30	FF1ENP036		28,000	12.0	14.0
4609346	24ANB630A**30	FF1ENP037		28,200	12.5	15.0
4638126	24ANB630A**30	FV4CN(B,F)003		28,000	13.0	16.0
4638127	24ANB630A**30	FV4CN(B,F)005		28,600	13.5	16.5
4638125	24ANB630A**30	FV4CNF002		28,000	13.0	16.0
4609340	24ANB630A**30	FX4DN(B,F)031		28,400	13.0	15.5
4609341	24ANB630A**30	FX4DN(B,F)037		28,800	13.0	16.0
4609342	24ANB630A**30	FX4DN(B,F)043		28,600	12.5	15.0
4609338	24ANB630A**30	FY5BNF030+TXV		28,200	12.5	14.5
4609339	24ANB630A**30	FY5BNF036+TXV		28,000	12.0	14.5
4609507	24ANB636A**30	†CNPV*3717A**+TDR		34,400	12.0	14.5
4609509	24ANB636A**30	CAP**3614A**	58CV(A,X)070−12	32,800	12.0	15.0
4609510	24ANB636A**30	CAP**3614A**	58PH*045−08	32,600	11.5	14.0
4609508	24ANB636A**30	CAP**3614A**+TDR		32,800	11.5	14.0
4609735	24ANB636A**30	CAP**3617A**	58CV(A,X)070−12	32,800	12.0	15.0
4609513	24ANB636A**30	CAP**3617A**	58CV(A,X)090−16	33,000	12.5	15.5
4609515	24ANB636A**30	CAP**3617A**	58MEB040−12	33,200	12.5	15.5
4609516	24ANB636A**30	CAP**3617A**	58MEC060−12	33,200	12.5	15.2
4609517	24ANB636A**30	CAP**3617A**	58MEC080−12	33,000	12.5	15.2
4609518	24ANB636A**30	CAP**3617A**	58MEC080−16	33,200	12.5	15.2
4609512	24ANB636A**30	CAP**3617A**	58MV(B,C)060−14	33,000	12.5	15.2
4609736	24ANB636A**30	CAP**3617A**	58PH*045−08	32,800	12.0	14.5
4609514	24ANB636A**30	CAP**3617A**	58PH*070−16	33,000	12.0	15.0
4644726	24ANB636A**30	CAP**3617A**	58UVB060−14	33,000	12.2	15.2
4612825	24ANB636A**30	CAP**3617A**	OVLAAB036098	32,800	12.0	14.5
4609900	24ANB636A**30	CAP**3617A**	OVMAAB036098	32,800	12.0	14.5
4609902	24ANB636A**30	CAP**3617A**	OVMAAB042112	33,000	12.5	15.0
4609511	24ANB636A**30	CAP**3617A**+TDR		33,000	11.5	14.0
4609543	24ANB636A**30	CAP**3619A**	58HDV040−−12	32,800	11.5	14.0
4609544	24ANB636A**30	CAP**3619A**	58HDV060−−12	33,000	12.0	14.5
4609542	24ANB636A**30	CAP**3619A**+TDR		33,000	11.5	14.0
4609738	24ANB636A**30	CAP**3621A**	58CV(A,X)090−16	33,000	12.5	15.5
4609523	24ANB636A**30	CAP**3621A**	58CV(A,X)110−20	33,000	12.5	15.5
4609740	24ANB636A**30	CAP**3621A**	58MEB040−12	33,200	12.5	15.5
4609741	24ANB636A**30	CAP**3621A**	58MEC060−12	33,400	12.5	15.5
4609742	24ANB636A**30	CAP**3621A**	58MEC080−12	33,200	12.5	15.5
4609743	24ANB636A**30	CAP**3621A**	58MEC080−16	33,200	12.5	15.2
4609526	24ANB636A**30	CAP**3621A**	58MEC100−20	33,200	13.0	16.0
4609737	24ANB636A**30	CAP**3621A**	58MV(B,C)060−14	33,200	12.5	15.5
4609520	24ANB636A**30	CAP**3621A**	58MV(B,C)080−14	33,000	12.0	15.2
4609521	24ANB636A**30	CAP**3621A**	58MV(B,C)080−20	33,000	12.5	15.2
4609522	24ANB636A**30	CAP**3621A**	58MV(B,C)100−20	33,000	12.5	15.5
4609739	24ANB636A**30	CAP**3621A**	58PH*070−16	33,000	12.0	15.0
4609524	24ANB636A**30	CAP**3621A**	58PH*090−16	33,200	12.5	15.5
4609525	24ANB636A**30	CAP**3621A**	58PH*110−20	33,400	12.5	15.5
4644727	24ANB636A**30	CAP**3621A**	58UVB080−14	33,000	12.2	15.2
4644728	24ANB636A**30	CAP**3621A**	58UVB080−20	33,000	12.5	15.2
4644729	24ANB636A**30	CAP**3621A**	58UVB100−20	33,000	12.5	15.5
4609903	24ANB636A**30	CAP**3621A**	OVLAAB048112	33,200	12.5	15.0
4609519	24ANB636A**30	CAP**3621A**+TDR		33,000	11.5	14.0
4609745	24ANB636A**30	CAP**4221A**	58CV(A,X)090−16	33,200	12.5	15.5
4609532	24ANB636A**30	CAP**4221A**	58CV(A,X)110−20	33,200	12.5	15.5
4609747	24ANB636A**30	CAP**4221A**	58MEB040−12	33,400	12.5	15.5
4609748	24ANB636A**30	CAP**4221A**	58MEC060−12	33,600	12.5	15.5
4609749	24ANB636A**30	CAP**4221A**	58MEC080−12	33,400	12.5	15.5
4609750	24ANB636A**30	CAP**4221A**	58MEC080−16	33,400	12.5	15.5
4609535	24ANB636A**30	CAP**4221A**	58MEC100−20	33,400	13.0	16.0
4609744	24ANB636A**30	CAP**4221A**	58MV(B,C)060−14	33,400	12.5	15.5

See notes on page 35

COMBINATION RATINGS CONTINUED

AHRI Ref. Number	Model Number	Indoor Coil Model Number	Furnace Model Number	Cooling Capacity	EER	SEER
4609528	24ANB636A**30	CAP**4221A**	58MV(B,C)080−14	33,200	12.5	15.2
4609529	24ANB636A**30	CAP**4221A**	58MV(B,C)080−20	33,200	12.5	15.5
4609530	24ANB636A**30	CAP**4221A**	58MV(B,C)100−20	33,200	12.5	15.5
4609746	24ANB636A**30	CAP**4221A**	58PH*070−16	33,200	12.0	15.0
4609533	24ANB636A**30	CAP**4221A**	58PH*090−16	33,400	13.0	16.0
4609534	24ANB636A**30	CAP**4221A**	58PH*110−20	33,600	13.0	16.0
4644730	24ANB636A**30	CAP**4221A**	58UVB080−14	33,200	12.5	15.2
4644731	24ANB636A**30	CAP**4221A**	58UVB080−20	33,200	12.5	15.5
4644732	24ANB636A**30	CAP**4221A**	58UVB100−20	33,200	12.5	15.5
4609904	24ANB636A**30	CAP**4221A**	OVLAAB048112	33,400	12.5	15.0
4609527	24ANB636A**30	CAP**4221A**+TDR		33,400	11.5	14.0
4609754	24ANB636A**30	CAP**4224A**	58CV(A,X)110−20	33,200	12.5	15.5
4609539	24ANB636A**30	CAP**4224A**	58CV(A,X)135−22	33,200	13.0	16.0
4609540	24ANB636A**30	CAP**4224A**	58CV(A,X)155−22	33,400	13.0	16.0
4609541	24ANB636A**30	CAP**4224A**	58HDV100−−20	33,600	12.5	15.5
4609757	24ANB636A**30	CAP**4224A**	58MEC100−20	33,400	13.0	16.0
4609751	24ANB636A**30	CAP**4224A**	58MV(B,C)080−14	33,200	12.5	15.2
4609752	24ANB636A**30	CAP**4224A**	58MV(B,C)080−20	33,200	12.5	15.5
4609753	24ANB636A**30	CAP**4224A**	58MV(B,C)100−20	33,200	12.5	15.5
4609538	24ANB636A**30	CAP**4224A**	58MV(B,C)120−20	33,200	13.0	16.0
4609537	24ANB636A**30	CAP**4224A**	58MVB040−14	33,000	12.5	15.2
4609755	24ANB636A**30	CAP**4224A**	58PH*090−16	33,600	13.0	16.0
4609756	24ANB636A**30	CAP**4224A**	58PH*110−20	33,600	13.0	16.0
4644733	24ANB636A**30	CAP**4224A**	58UVB120−20	33,200	12.7	15.5
4609536	24ANB636A**30	CAP**4224A**+TDR		33,400	11.5	14.0
4609807	24ANB636A**30	CAP**4817A**	58CV(A,X)070−12	33,600	12.5	15.5
4609808	24ANB636A**30	CAP**4817A**	58CV(A,X)090−16	33,800	13.0	16.0
4609811	24ANB636A**30	CAP**4817A**	58MEB040−12	34,000	13.0	16.0
4609812	24ANB636A**30	CAP**4817A**	58MEC060−12	34,200	13.0	16.0
4609813	24ANB636A**30	CAP**4817A**	58MEC080−12	34,000	13.0	16.0
4609814	24ANB636A**30	CAP**4817A**	58MEC080−16	34,200	13.0	16.0
4609806	24ANB636A**30	CAP**4817A**	58MV(B,C)060−14	34,000	13.0	16.0
4609809	24ANB636A**30	CAP**4817A**	58PH*045−08	33,800	12.0	14.5
4609810	24ANB636A**30	CAP**4817A**	58PH*070−16	33,800	12.0	15.2
4609805	24ANB636A**30	CAP**4817A**+TDR		34,000	11.5	14.0
4609820	24ANB636A**30	CAP**4821A**	58CV(A,X)090−16	33,600	13.0	16.0
4609821	24ANB636A**30	CAP**4821A**	58CV(A,X)110−20	33,600	13.0	16.0
4609825	24ANB636A**30	CAP**4821A**	58MEB040−12	33,800	13.0	16.0
4609826	24ANB636A**30	CAP**4821A**	58MEC060−12	34,000	13.0	16.0
4609827	24ANB636A**30	CAP**4821A**	58MEC080−12	33,800	13.0	16.0
4609828	24ANB636A**30	CAP**4821A**	58MEC080−16	34,000	13.0	15.5
4609829	24ANB636A**30	CAP**4821A**	58MEC100−20	33,800	13.0	16.0
4609816	24ANB636A**30	CAP**4821A**	58MV(B,C)060−14	33,800	12.5	15.5
4609817	24ANB636A**30	CAP**4821A**	58MV(B,C)080−14	33,600	12.5	15.5
4609818	24ANB636A**30	CAP**4821A**	58MV(B,C)080−20	33,600	12.5	15.5
4609819	24ANB636A**30	CAP**4821A**	58MV(B,C)100−20	33,600	12.5	15.5
4609822	24ANB636A**30	CAP**4821A**	58PH*070−16	33,600	12.0	15.0
4609823	24ANB636A**30	CAP**4821A**	58PH*090−16	34,000	13.0	16.0
4609824	24ANB636A**30	CAP**4821A**	58PH*110−20	34,000	13.0	16.0
4609815	24ANB636A**30	CAP**4821A**+TDR		33,800	11.5	14.0
4609843	24ANB636A**30	CAP**4823A**	58HDV060−−12	33,800	12.0	15.0
4609844	24ANB636A**30	CAP**4823A**	58HDV080−−20	34,200	12.5	15.2
4609842	24ANB636A**30	CAP**4823A**+TDR		33,800	11.5	14.0
4609836	24ANB636A**30	CAP**4824A**	58CV(A,X)110−20	33,600	13.0	16.0
4609837	24ANB636A**30	CAP**4824A**	58CV(A,X)135−22	33,600	13.0	16.0
4609838	24ANB636A**30	CAP**4824A**	58CV(A,X)155−22	33,800	13.0	16.0
4609841	24ANB636A**30	CAP**4824A**	58MEC100−20	33,800	13.0	16.0
4609832	24ANB636A**30	CAP**4824A**	58MV(B,C)080−14	33,600	12.5	15.5
4609833	24ANB636A**30	CAP**4824A**	58MV(B,C)080−20	33,600	12.5	15.5
4609834	24ANB636A**30	CAP**4824A**	58MV(B,C)100−20	33,800	13.0	16.0
4609835	24ANB636A**30	CAP**4824A**	58MV(B,C)120−20	33,600	13.0	16.0
4609831	24ANB636A**30	CAP**4824A**	58MVB040−14	33,400	12.5	15.5
4609839	24ANB636A**30	CAP**4824A**	58PH*090−16	34,000	13.0	16.0
4609840	24ANB636A**30	CAP**4824A**	58PH*110−20	34,200	13.0	16.0
4609830	24ANB636A**30	CAP**4824A**+TDR		33,800	11.5	14.0
4609666	24ANB636A**30	CNPF*3618A**+TDR		33,000	11.0	14.0
4609866	24ANB636A**30	CNPF*4818A**+TDR		33,800	11.5	14.0
4609597	24ANB636A**30	CNPH*3617A**	58CV(A,X)070−12	32,800	12.0	15.0
4609598	24ANB636A**30	CNPH*3617A**	58CV(A,X)090−16	32,800	12.5	15.2
4609599	24ANB636A**30	CNPH*3617A**	58CV(A,X)110−20	32,800	12.5	15.2
4609600	24ANB636A**30	CNPH*3617A**	58CV(A,X)135−22	32,800	12.5	15.2
4609601	24ANB636A**30	CNPH*3617A**	58CV(A,X)155−22	33,000	12.5	15.5
4609611	24ANB636A**30	CNPH*3617A**	58HDV040−−12	32,600	11.5	14.0
4609612	24ANB636A**30	CNPH*3617A**	58HDV060−−12	32,800	11.5	14.5
4609613	24ANB636A**30	CNPH*3617A**	58HDV080−−20	33,200	12.0	14.5
4609614	24ANB636A**30	CNPH*3617A**	58HDV100−−20	33,000	12.0	15.0
4609606	24ANB636A**30	CNPH*3617A**	58MEB040−12	33,000	12.5	15.2
4609607	24ANB636A**30	CNPH*3617A**	58MEC060−12	33,000	12.0	15.0
4609608	24ANB636A**30	CNPH*3617A**	58MEC080−12	33,000	12.5	15.2
4609609	24ANB636A**30	CNPH*3617A**	58MEC080−16	33,000	12.0	15.0

See notes on page 35

COMBINATION RATINGS CONTINUED

AHRI Ref. Number	Model Number	Indoor Coil Model Number	Furnace Model Number	Cooling Capacity	EER	SEER
4609610	24ANB636A**30	CNPH*3617A**	58MEC100−20	32,800	12.5	15.5
4609592	24ANB636A**30	CNPH*3617A**	58MV(B,C)060−14	33,000	12.0	15.0
4609593	24ANB636A**30	CNPH*3617A**	58MV(B,C)080−14	32,800	12.0	15.0
4609594	24ANB636A**30	CNPH*3617A**	58MV(B,C)080−20	32,800	12.0	15.0
4609595	24ANB636A**30	CNPH*3617A**	58MV(B,C)100−20	33,000	12.0	15.0
4609596	24ANB636A**30	CNPH*3617A**	58MV(B,C)120−20	32,800	12.5	15.2
4609591	24ANB636A**30	CNPH*3617A**	58MVB040−14	32,600	12.0	15.0
4609602	24ANB636A**30	CNPH*3617A**	58PH*045−08	32,800	11.5	14.5
4609603	24ANB636A**30	CNPH*3617A**	58PH*070−16	32,800	12.0	14.5
4609604	24ANB636A**30	CNPH*3617A**	58PH*090−16	33,000	12.5	15.2
4609605	24ANB636A**30	CNPH*3617A**	58PH*110−20	33,000	12.5	15.5
4612829	24ANB636A**30	CNPH*3617A**	OVLAAB036098	32,600	12.0	14.5
4609919	24ANB636A**30	CNPH*3617A**	OVLAAB048112	33,000	12.0	14.5
4609920	24ANB636A**30	CNPH*3617A**	OVLAAB060154	33,600	12.0	15.0
4609916	24ANB636A**30	CNPH*3617A**	OVMAAB036098	32,800	12.0	14.5
4609918	24ANB636A**30	CNPH*3617A**	OVMAAB042112	32,800	12.0	15.0
4609590	24ANB636A**30	CNPH*3617A**+TDR		33,000	11.5	14.0
4609622	24ANB636A**30	CNPH*4221A**	58CV(A,X)070−12	33,000	12.0	15.2
4609623	24ANB636A**30	CNPH*4221A**	58CV(A,X)090−16	33,200	12.5	15.5
4609624	24ANB636A**30	CNPH*4221A**	58CV(A,X)110−20	33,200	12.5	15.5
4609625	24ANB636A**30	CNPH*4221A**	58CV(A,X)135−22	33,200	12.5	15.5
4609626	24ANB636A**30	CNPH*4221A**	58CV(A,X)155−22	33,400	13.0	16.0
4609636	24ANB636A**30	CNPH*4221A**	58HDV040−−12	33,000	11.5	14.0
4609637	24ANB636A**30	CNPH*4221A**	58HDV060−−12	33,400	12.0	14.5
4609638	24ANB636A**30	CNPH*4221A**	58HDV080−−20	33,800	12.0	15.0
4609639	24ANB636A**30	CNPH*4221A**	58HDV100−−20	33,600	12.0	15.2
4609631	24ANB636A**30	CNPH*4221A**	58MEB040−12	33,400	12.5	15.5
4609632	24ANB636A**30	CNPH*4221A**	58MEC060−12	33,400	12.5	15.5
4609633	24ANB636A**30	CNPH*4221A**	58MEC080−12	33,400	12.5	15.5
4609634	24ANB636A**30	CNPH*4221A**	58MEC080−16	33,400	12.5	15.5
4609635	24ANB636A**30	CNPH*4221A**	58MEC100−20	33,200	13.0	16.0
4609617	24ANB636A**30	CNPH*4221A**	58MV(B,C)060−14	33,400	12.5	15.2
4609618	24ANB636A**30	CNPH*4221A**	58MV(B,C)080−14	33,200	12.0	15.0
4609619	24ANB636A**30	CNPH*4221A**	58MV(B,C)080−20	33,200	12.5	15.2
4609620	24ANB636A**30	CNPH*4221A**	58MV(B,C)100−20	33,200	12.5	15.5
4609621	24ANB636A**30	CNPH*4221A**	58MV(B,C)120−20	33,200	12.5	15.5
4609616	24ANB636A**30	CNPH*4221A**	58MVB040−14	33,000	12.0	15.0
4609627	24ANB636A**30	CNPH*4221A**	58PH*045−08	33,200	12.0	14.5
4609628	24ANB636A**30	CNPH*4221A**	58PH*070−16	33,200	12.0	15.0
4609629	24ANB636A**30	CNPH*4221A**	58PH*090−16	33,400	12.5	15.5
4609630	24ANB636A**30	CNPH*4221A**	58PH*110−20	33,600	13.0	16.0
4612830	24ANB636A**30	CNPH*4221A**	OVLAAB036098	33,000	12.0	14.5
4609924	24ANB636A**30	CNPH*4221A**	OVLAAB048112	33,400	12.0	15.0
4609925	24ANB636A**30	CNPH*4221A**	OVLAAB060154	34,000	12.5	15.5
4609921	24ANB636A**30	CNPH*4221A**	OVMAAB036098	33,000	12.0	14.5
4609923	24ANB636A**30	CNPH*4221A**	OVMAAB042112	33,200	12.5	15.0
4609615	24ANB636A**30	CNPH*4221A**+TDR		33,400	11.5	14.0
4609647	24ANB636A**30	CNPH*4321A**	58CV(A,X)070−12	34,000	13.0	16.0
4609648	24ANB636A**30	CNPH*4321A**	58CV(A,X)090−16	34,000	13.0	16.0
4609649	24ANB636A**30	CNPH*4321A**	58CV(A,X)110−20	34,200	13.0	16.0
4609650	24ANB636A**30	CNPH*4321A**	58CV(A,X)135−22	34,200	13.0	16.0
4609651	24ANB636A**30	CNPH*4321A**	58CV(A,X)155−22	34,200	13.0	16.0
4609662	24ANB636A**30	CNPH*4321A**	58HDV040−−12	34,000	12.0	14.5
4609663	24ANB636A**30	CNPH*4321A**	58HDV060−−12	34,400	12.0	15.2
4609664	24ANB636A**30	CNPH*4321A**	58HDV080−−20	34,800	12.5	15.5
4609665	24ANB636A**30	CNPH*4321A**	58HDV100−−20	34,600	13.0	16.0
4609657	24ANB636A**30	CNPH*4321A**	58MEB040−12	34,400	13.0	16.0
4609658	24ANB636A**30	CNPH*4321A**	58MEC060−12	34,600	13.0	16.0
4609659	24ANB636A**30	CNPH*4321A**	58MEC080−12	34,400	13.0	16.0
4609660	24ANB636A**30	CNPH*4321A**	58MEC080−16	34,400	13.0	16.0
4609661	24ANB636A**30	CNPH*4321A**	58MEC100−20	34,400	13.0	16.0
4609642	24ANB636A**30	CNPH*4321A**	58MV(B,C)060−14	34,200	13.0	16.0
4609643	24ANB636A**30	CNPH*4321A**	58MV(B,C)080−14	34,000	13.0	16.0
4609644	24ANB636A**30	CNPH*4321A**	58MV(B,C)080−20	34,000	13.0	16.0
4609645	24ANB636A**30	CNPH*4321A**	58MV(B,C)100−20	34,200	13.0	16.0
4609646	24ANB636A**30	CNPH*4321A**	58MV(B,C)120−20	34,000	13.0	16.0
4609641	24ANB636A**30	CNPH*4321A**	58MVB040−14	34,000	12.5	15.5
4609652	24ANB636A**30	CNPH*4321A**	58PH*045−08	34,200	12.0	15.0
4609654	24ANB636A**30	CNPH*4321A**	58PH*070−16	34,200	12.5	15.5
4609655	24ANB636A**30	CNPH*4321A**	58PH*090−16	34,400	13.0	16.0
4609656	24ANB636A**30	CNPH*4321A**	58PH*110−20	34,600	13.0	16.0
4612831	24ANB636A**30	CNPH*4321A**	OVLAAB036098	33,800	12.5	15.2
4609929	24ANB636A**30	CNPH*4321A**	OVLAAB048112	34,200	12.5	15.5
4609930	24ANB636A**30	CNPH*4321A**	OVLAAB060154	35,000	13.0	16.0
4609926	24ANB636A**30	CNPH*4321A**	OVMAAB036098	34,000	12.5	15.2
4609928	24ANB636A**30	CNPH*4321A**	OVMAAB042112	34,200	13.0	16.0
4609640	24ANB636A**30	CNPH*4321A**+TDR		34,400	11.5	14.0
4609852	24ANB636A**30	CNPH*4821A**	58CV(A,X)070−12	33,600	12.5	15.5
4609853	24ANB636A**30	CNPH*4821A**	58CV(A,X)090−16	33,600	13.0	16.0
4609854	24ANB636A**30	CNPH*4821A**	58CV(A,X)110−20	33,800	13.0	16.0

See notes on page 35

COMBINATION RATINGS CONTINUED

AHRI Ref. Number	Model Number	Indoor Coil Model Number	Furnace Model Number	Cooling Capacity	EER	SEER
4609855	24ANB636A**30	CNPH*4821A**	58CV(A,X)135−22	33,800	13.0	16.0
4609856	24ANB636A**30	CNPH*4821A**	58CV(A,X)155−22	33,800	13.0	16.0
4609861	24ANB636A**30	CNPH*4821A**	58MEB040−12	34,000	13.0	16.0
4609862	24ANB636A**30	CNPH*4821A**	58MEC060−12	34,200	13.0	16.0
4609863	24ANB636A**30	CNPH*4821A**	58MEC080−12	34,000	13.0	16.0
4609864	24ANB636A**30	CNPH*4821A**	58MEC080−16	34,200	13.0	16.0
4609865	24ANB636A**30	CNPH*4821A**	58MEC100−20	34,000	13.0	16.0
4609847	24ANB636A**30	CNPH*4821A**	58MV(B,C)060−14	33,800	13.0	16.0
4609848	24ANB636A**30	CNPH*4821A**	58MV(B,C)080−14	33,800	12.5	15.5
4609849	24ANB636A**30	CNPH*4821A**	58MV(B,C)080−20	33,600	13.0	16.0
4609850	24ANB636A**30	CNPH*4821A**	58MV(B,C)100−20	33,800	13.0	16.0
4609851	24ANB636A**30	CNPH*4821A**	58MV(B,C)120−20	33,800	13.0	16.0
4609846	24ANB636A**30	CNPH*4821A**	58MVB040−14	33,600	12.5	15.5
4609857	24ANB636A**30	CNPH*4821A**	58PH*045−08	33,800	12.0	15.0
4609858	24ANB636A**30	CNPH*4821A**	58PH*070−16	33,800	12.5	15.2
4609859	24ANB636A**30	CNPH*4821A**	58PH*090−16	34,000	13.0	16.0
4609860	24ANB636A**30	CNPH*4821A**	58PH*110−20	34,200	13.0	16.0
4609845	24ANB636A**30	CNPH*4821A**+TDR		34,000	11.5	14.0
4609899	24ANB636A**30	CNPH*6024A**	58PH*090−16	34,400	13.0	16.0
4609890	24ANB636A**30	CNPH*6024A**+TDR		34,200	12.0	14.5
4609758	24ANB636A**30	CNPV*3617A**	58CV(A,X)070−12	32,800	12.0	15.0
4609547	24ANB636A**30	CNPV*3617A**	58CV(A,X)090−16	32,800	12.0	15.2
4609941	24ANB636A**30	CNPV*3617A**	58HDV040−−12	32,600	11.5	14.0
4609942	24ANB636A**30	CNPV*3617A**	58HDV060−−12	32,800	12.0	14.5
4609549	24ANB636A**30	CNPV*3617A**	58MEB040−12	33,000	12.0	15.2
4609550	24ANB636A**30	CNPV*3617A**	58MEC060−12	33,000	12.0	15.0
4609551	24ANB636A**30	CNPV*3617A**	58MEC080−12	33,000	12.0	15.2
4609552	24ANB636A**30	CNPV*3617A**	58MEC080−16	33,000	12.0	15.0
4609546	24ANB636A**30	CNPV*3617A**	58MV(B,C)060−14	33,000	12.0	15.0
4609759	24ANB636A**30	CNPV*3617A**	58PH*045−08	32,800	11.5	14.5
4609548	24ANB636A**30	CNPV*3617A**	58PH*070−16	32,800	12.0	14.5
4644734	24ANB636A**30	CNPV*3617A**	58UVB060−14	33,000	12.2	15.2
4612826	24ANB636A**30	CNPV*3617A**	OVLAAB036098	32,600	12.0	14.5
4609905	24ANB636A**30	CNPV*3617A**	OVMAAB036098	32,800	12.0	14.5
4609907	24ANB636A**30	CNPV*3617A**	OVMAAB042112	32,800	12.0	15.0
4609545	24ANB636A**30	CNPV*3617A**+TDR		33,000	11.5	14.0
4609761	24ANB636A**30	CNPV*3621A**	58CV(A,X)090−16	32,800	12.5	15.2
4609557	24ANB636A**30	CNPV*3621A**	58CV(A,X)110−20	33,000	12.5	15.2
4609943	24ANB636A**30	CNPV*3621A**	58HDV040−−12	32,600	11.5	14.0
4609944	24ANB636A**30	CNPV*3621A**	58HDV060−−12	33,000	12.0	14.5
4609945	24ANB636A**30	CNPV*3621A**	58HDV080−−20	33,400	12.0	15.0
4609763	24ANB636A**30	CNPV*3621A**	58MEB040−12	33,000	12.5	15.2
4609764	24ANB636A**30	CNPV*3621A**	58MEC060−12	33,000	12.0	15.2
4609765	24ANB636A**30	CNPV*3621A**	58MEC080−12	33,000	12.5	15.2
4609766	24ANB636A**30	CNPV*3621A**	58MEC080−16	33,000	12.0	15.0
4609560	24ANB636A**30	CNPV*3621A**	58MEC100−20	32,800	12.5	15.5
4609760	24ANB636A**30	CNPV*3621A**	58MV(B,C)060−14	33,000	12.0	15.0
4609554	24ANB636A**30	CNPV*3621A**	58MV(B,C)080−14	32,800	12.0	15.0
4609555	24ANB636A**30	CNPV*3621A**	58MV(B,C)080−20	32,800	12.0	15.0
4609556	24ANB636A**30	CNPV*3621A**	58MV(B,C)100−20	33,000	12.0	15.0
4609762	24ANB636A**30	CNPV*3621A**	58PH*070−16	32,800	12.0	14.5
4609558	24ANB636A**30	CNPV*3621A**	58PH*090−16	33,000	12.5	15.5
4609559	24ANB636A**30	CNPV*3621A**	58PH*110−20	33,200	12.5	15.5
4644735	24ANB636A**30	CNPV*3621A**	58UVB080−14	32,800	12.2	15.0
4644736	24ANB636A**30	CNPV*3621A**	58UVB080−20	32,800	12.2	15.2
4644737	24ANB636A**30	CNPV*3621A**	58UVB100−20	33,000	12.2	15.2
4609908	24ANB636A**30	CNPV*3621A**	OVLAAB048112	33,000	12.0	14.5
4609553	24ANB636A**30	CNPV*3621A**+TDR		33,000	11.5	14.0
4609767	24ANB636A**30	CNPV*3717A**	58CV(A,X)070−12	34,000	12.5	15.5
4609562	24ANB636A**30	CNPV*3717A**	58CV(A,X)090−16	34,000	13.0	16.0
4609946	24ANB636A**30	CNPV*3717A**	58HDV040−−12	34,000	12.0	14.5
4609947	24ANB636A**30	CNPV*3717A**	58HDV060−−12	34,200	12.5	15.0
4609564	24ANB636A**30	CNPV*3717A**	58MEB040−12	34,400	13.0	16.0
4609565	24ANB636A**30	CNPV*3717A**	58MEC060−12	34,400	13.0	16.0
4609566	24ANB636A**30	CNPV*3717A**	58MEC080−12	34,200	13.0	16.0
4609567	24ANB636A**30	CNPV*3717A**	58MEC080−16	34,400	13.0	16.0
4609561	24ANB636A**30	CNPV*3717A**	58MV(B,C)060−14	34,200	13.0	16.0
4609768	24ANB636A**30	CNPV*3717A**	58PH*045−08	34,000	12.0	15.0
4609563	24ANB636A**30	CNPV*3717A**	58PH*070−16	34,200	12.5	15.5
4644738	24ANB636A**30	CNPV*3717A**	58UVB060−14	34,200	13.0	16.0
4612827	24ANB636A**30	CNPV*3717A**	OVLAAB036098	33,800	12.5	15.0
4609909	24ANB636A**30	CNPV*3717A**	OVMAAB036098	34,000	12.5	15.2
4609911	24ANB636A**30	CNPV*3717A**	OVMAAB042112	34,000	12.5	15.5
4609769	24ANB636A**30	CNPV*4217A**	58CV(A,X)070−12	33,400	12.5	15.2
4609570	24ANB636A**30	CNPV*4217A**	58CV(A,X)090−16	33,400	12.5	15.5
4609948	24ANB636A**30	CNPV*4217A**	58HDV040−−12	33,200	12.0	14.5
4609949	24ANB636A**30	CNPV*4217A**	58HDV060−−12	33,600	12.0	15.0
4609572	24ANB636A**30	CNPV*4217A**	58MEB040−12	33,600	12.5	15.5
4609573	24ANB636A**30	CNPV*4217A**	58MEC060−12	33,800	12.5	15.5
4609574	24ANB636A**30	CNPV*4217A**	58MEC080−12	33,600	12.5	15.5

See notes on page 35

COMBINATION RATINGS CONTINUED

AHRI Ref. Number	Model Number	Indoor Coil Model Number	Furnace Model Number	Cooling Capacity	EER	SEER
4609575	24ANB636A**30	CNPV*4217A**	58MEC080−16	33,800	12.5	15.5
4609569	24ANB636A**30	CNPV*4217A**	58MV(B,C)060−14	33,600	12.5	15.5
4609770	24ANB636A**30	CNPV*4217A**	58PH*045−08	33,400	11.5	14.5
4609571	24ANB636A**30	CNPV*4217A**	58PH*070−16	33,400	12.0	15.0
4644739	24ANB636A**30	CNPV*4217A**	58UVB060−14	33,600	12.5	15.5
4612828	24ANB636A**30	CNPV*4217A**	OVLAAB036098	33,200	12.0	15.0
4609912	24ANB636A**30	CNPV*4217A**	OVMAAB036098	33,400	12.0	15.0
4609914	24ANB636A**30	CNPV*4217A**	OVMAAB042112	33,400	12.5	15.5
4609568	24ANB636A**30	CNPV*4217A**+TDR		33,800	11.5	14.0
4609772	24ANB636A**30	CNPV*4221A**	58CV(A,X)090−16	33,200	12.5	15.5
4609580	24ANB636A**30	CNPV*4221A**	58CV(A,X)110−20	33,200	12.5	15.5
4609950	24ANB636A**30	CNPV*4221A**	58HDV040−−12	33,000	12.0	14.5
4609951	24ANB636A**30	CNPV*4221A**	58HDV060−−12	33,400	12.0	14.5
4609952	24ANB636A**30	CNPV*4221A**	58HDV080−−20	33,800	12.0	15.0
4609774	24ANB636A**30	CNPV*4221A**	58MEB040−12	33,400	12.5	15.5
4609775	24ANB636A**30	CNPV*4221A**	58MEC060−12	33,400	12.5	15.5
4609776	24ANB636A**30	CNPV*4221A**	58MEC080−12	33,400	12.5	15.5
4609777	24ANB636A**30	CNPV*4221A**	58MEC080−16	33,400	12.5	15.5
4609583	24ANB636A**30	CNPV*4221A**	58MEC100−20	33,200	13.0	16.0
4609771	24ANB636A**30	CNPV*4221A**	58MV(B,C)060−14	33,400	12.5	15.2
4609577	24ANB636A**30	CNPV*4221A**	58MV(B,C)080−14	33,200	12.0	15.0
4609578	24ANB636A**30	CNPV*4221A**	58MV(B,C)080−20	33,200	12.5	15.2
4609579	24ANB636A**30	CNPV*4221A**	58MV(B,C)100−20	33,200	12.5	15.5
4609773	24ANB636A**30	CNPV*4221A**	58PH*070−16	33,200	12.0	15.0
4609581	24ANB636A**30	CNPV*4221A**	58PH*090−16	33,400	12.5	15.5
4609582	24ANB636A**30	CNPV*4221A**	58PH*110−20	33,600	13.0	16.0
4644740	24ANB636A**30	CNPV*4221A**	58UVB080−14	33,200	12.2	15.2
4644741	24ANB636A**30	CNPV*4221A**	58UVB080−20	33,200	12.5	15.2
4644742	24ANB636A**30	CNPV*4221A**	58UVB100−20	33,200	12.5	15.5
4609915	24ANB636A**30	CNPV*4221A**	OVLAAB048112	33,400	12.0	15.0
4609576	24ANB636A**30	CNPV*4221A**+TDR		33,400	11.5	14.0
4609894	24ANB636A**30	CNPV*4324A**	58CV(A,X)110−20	34,200	13.0	16.0
4609587	24ANB636A**30	CNPV*4324A**	58CV(A,X)135−22	34,200	13.0	16.0
4609588	24ANB636A**30	CNPV*4324A**	58CV(A,X)155−22	34,200	13.0	16.0
4609898	24ANB636A**30	CNPV*4324A**	58HDV080−−20	34,800	13.0	16.0
4609589	24ANB636A**30	CNPV*4324A**	58HDV100−−20	34,600	13.0	16.0
4609897	24ANB636A**30	CNPV*4324A**	58MEC100−20	34,400	13.0	16.0
4609891	24ANB636A**30	CNPV*4324A**	58MV(B,C)080−14	34,200	13.0	16.0
4609892	24ANB636A**30	CNPV*4324A**	58MV(B,C)080−20	34,000	13.0	16.0
4609893	24ANB636A**30	CNPV*4324A**	58MV(B,C)100−20	34,200	13.0	16.0
4609586	24ANB636A**30	CNPV*4324A**	58MV(B,C)120−20	34,200	13.0	16.0
4609585	24ANB636A**30	CNPV*4324A**	58MVB040−14	34,000	13.0	16.0
4609895	24ANB636A**30	CNPV*4324A**	58PH*090−16	34,600	13.0	16.0
4609896	24ANB636A**30	CNPV*4324A**	58PH*110−20	34,800	13.0	16.0
4644743	24ANB636A**30	CNPV*4324A**	58UVB120−20	34,200	13.0	16.0
4609584	24ANB636A**30	CNPV*4324A**+TDR		34,400	12.0	14.5
4609783	24ANB636A**30	CNPV*4821A**	58CV(A,X)090−16	33,600	13.0	16.0
4609784	24ANB636A**30	CNPV*4821A**	58CV(A,X)110−20	33,800	13.0	16.0
4609788	24ANB636A**30	CNPV*4821A**	58MEB040−12	34,000	13.0	16.0
4609789	24ANB636A**30	CNPV*4821A**	58MEC060−12	34,200	13.0	16.0
4609790	24ANB636A**30	CNPV*4821A**	58MEC080−12	34,000	13.0	16.0
4609791	24ANB636A**30	CNPV*4821A**	58MEC080−16	34,200	13.0	16.0
4609792	24ANB636A**30	CNPV*4821A**	58MEC100−20	34,000	13.0	16.0
4609779	24ANB636A**30	CNPV*4821A**	58MV(B,C)060−14	33,800	13.0	16.0
4609780	24ANB636A**30	CNPV*4821A**	58MV(B,C)080−14	33,800	12.5	15.5
4609781	24ANB636A**30	CNPV*4821A**	58MV(B,C)080−20	33,600	13.0	16.0
4609782	24ANB636A**30	CNPV*4821A**	58MV(B,C)100−20	33,800	13.0	16.0
4609785	24ANB636A**30	CNPV*4821A**	58PH*070−16	33,800	12.5	15.2
4609786	24ANB636A**30	CNPV*4821A**	58PH*090−16	34,000	13.0	16.0
4609787	24ANB636A**30	CNPV*4821A**	58PH*110−20	34,200	13.0	16.0
4609778	24ANB636A**30	CNPV*4821A**+TDR		34,000	11.5	14.0
4609799	24ANB636A**30	CNPV*4824A**	58CV(A,X)110−20	33,800	13.0	16.0
4609800	24ANB636A**30	CNPV*4824A**	58CV(A,X)135−22	33,800	13.0	16.0
4609801	24ANB636A**30	CNPV*4824A**	58CV(A,X)155−22	33,800	13.0	16.0
4609804	24ANB636A**30	CNPV*4824A**	58MEC100−20	34,000	13.0	16.0
4609795	24ANB636A**30	CNPV*4824A**	58MV(B,C)080−14	33,800	12.5	15.5
4609796	24ANB636A**30	CNPV*4824A**	58MV(B,C)080−20	33,600	13.0	16.0
4609797	24ANB636A**30	CNPV*4824A**	58MV(B,C)100−20	33,800	13.0	16.0
4609798	24ANB636A**30	CNPV*4824A**	58MV(B,C)120−20	33,800	13.0	16.0
4609794	24ANB636A**30	CNPV*4824A**	58MVB040−14	33,600	12.5	15.5
4609802	24ANB636A**30	CNPV*4824A**	58PH*090−16	34,000	13.0	16.0
4609803	24ANB636A**30	CNPV*4824A**	58PH*110−20	34,200	13.0	16.0
4609793	24ANB636A**30	CNPV*4824A**+TDR		34,000	11.5	14.0
4609674	24ANB636A**30	CSPH*3612A**	58CV(A,X)070−12	33,400	12.5	15.5
4609675	24ANB636A**30	CSPH*3612A**	58CV(A,X)090−16	33,600	13.0	16.0
4609676	24ANB636A**30	CSPH*3612A**	58CV(A,X)110−20	33,600	13.0	16.0
4609677	24ANB636A**30	CSPH*3612A**	58CV(A,X)135−22	33,600	13.0	16.0
4609678	24ANB636A**30	CSPH*3612A**	58CV(A,X)155−22	33,800	13.0	16.0
4609688	24ANB636A**30	CSPH*3612A**	58HDV040−−12	33,400	12.0	14.5
4609689	24ANB636A**30	CSPH*3612A**	58HDV060−−12	33,800	12.0	15.0

See notes on page 35

COMBINATION RATINGS CONTINUED

AHRI Ref. Number	Model Number	Indoor Coil Model Number	Furnace Model Number	Cooling Capacity	EER	SEER
4609690	24ANB636A**30	CSPH*3612A**	58HDV080– –20	34,200	12.5	15.2
4609691	24ANB636A**30	CSPH*3612A**	58HDV100– –20	34,000	12.5	15.5
4609683	24ANB636A**30	CSPH*3612A**	58MEB040–12	33,800	13.0	16.0
4609684	24ANB636A**30	CSPH*3612A**	58MEC060–12	33,800	12.5	15.5
4609685	24ANB636A**30	CSPH*3612A**	58MEC080–12	33,800	13.0	16.0
4609686	24ANB636A**30	CSPH*3612A**	58MEC080–16	33,800	12.5	15.5
4609687	24ANB636A**30	CSPH*3612A**	58MEC100–20	33,800	13.0	16.0
4609669	24ANB636A**30	CSPH*3612A**	58MV(B,C)060–14	33,800	12.5	15.5
4609670	24ANB636A**30	CSPH*3612A**	58MV(B,C)080–14	33,600	12.5	15.2
4609671	24ANB636A**30	CSPH*3612A**	58MV(B,C)080–20	33,600	12.5	15.5
4609672	24ANB636A**30	CSPH*3612A**	58MV(B,C)100–20	33,800	12.5	15.5
4609673	24ANB636A**30	CSPH*3612A**	58MV(B,C)120–20	33,600	13.0	16.0
4609668	24ANB636A**30	CSPH*3612A**	58MVB040–14	33,400	12.5	15.2
4609679	24ANB636A**30	CSPH*3612A**	58PH*045–08	33,600	12.0	14.5
4609680	24ANB636A**30	CSPH*3612A**	58PH*070–16	33,600	12.0	15.0
4609681	24ANB636A**30	CSPH*3612A**	58PH*090–16	33,800	13.0	16.0
4609682	24ANB636A**30	CSPH*3612A**	58PH*110–20	34,000	13.0	16.0
4612832	24ANB636A**30	CSPH*3612A**	OVLAAB036098	33,400	12.0	15.0
4609934	24ANB636A**30	CSPH*3612A**	OVLAAB048112	33,800	12.5	15.2
4609935	24ANB636A**30	CSPH*3612A**	OVLAAB060154	34,400	12.5	15.5
4609931	24ANB636A**30	CSPH*3612A**	OVMAAB036098	33,400	12.0	15.0
4609933	24ANB636A**30	CSPH*3612A**	OVMAAB042112	33,600	12.5	15.5
4609667	24ANB636A**30	CSPH*3612A**+TDR		33,800	11.5	14.0
4609699	24ANB636A**30	CSPH*4212A**	58CV(A,X)070–12	33,600	12.5	15.5
4609700	24ANB636A**30	CSPH*4212A**	58CV(A,X)090–16	33,800	13.0	16.0
4609701	24ANB636A**30	CSPH*4212A**	58CV(A,X)110–20	33,800	13.0	16.0
4609702	24ANB636A**30	CSPH*4212A**	58CV(A,X)135–22	33,800	13.0	16.0
4609703	24ANB636A**30	CSPH*4212A**	58CV(A,X)155–22	34,000	13.0	16.0
4609713	24ANB636A**30	CSPH*4212A**	58HDV040– –12	33,600	12.0	14.5
4609714	24ANB636A**30	CSPH*4212A**	58HDV060– –12	34,000	12.0	15.0
4609715	24ANB636A**30	CSPH*4212A**	58HDV080– –20	34,400	12.5	15.5
4609716	24ANB636A**30	CSPH*4212A**	58HDV100– –20	34,200	13.0	16.0
4609708	24ANB636A**30	CSPH*4212A**	58MEB040–12	34,000	13.0	16.0
4609709	24ANB636A**30	CSPH*4212A**	58MEC060–12	34,200	13.0	16.0
4609710	24ANB636A**30	CSPH*4212A**	58MEC080–12	34,000	13.0	16.0
4609711	24ANB636A**30	CSPH*4212A**	58MEC080–16	34,200	13.0	16.0
4609712	24ANB636A**30	CSPH*4212A**	58MEC100–20	34,000	13.0	16.0
4609694	24ANB636A**30	CSPH*4212A**	58MV(B,C)060–14	34,000	13.0	16.0
4609695	24ANB636A**30	CSPH*4212A**	58MV(B,C)080–14	33,800	12.5	15.5
4609696	24ANB636A**30	CSPH*4212A**	58MV(B,C)080–20	33,800	12.5	15.5
4609697	24ANB636A**30	CSPH*4212A**	58MV(B,C)100–20	34,000	13.0	16.0
4609698	24ANB636A**30	CSPH*4212A**	58MV(B,C)120–20	33,800	13.0	16.0
4609693	24ANB636A**30	CSPH*4212A**	58MVB040–14	33,600	12.5	15.5
4609704	24ANB636A**30	CSPH*4212A**	58PH*045–08	33,800	12.0	15.0
4609705	24ANB636A**30	CSPH*4212A**	58PH*070–16	33,800	12.5	15.2
4609706	24ANB636A**30	CSPH*4212A**	58PH*090–16	34,000	13.0	16.0
4609707	24ANB636A**30	CSPH*4212A**	58PH*110–20	34,200	13.0	16.0
4612833	24ANB636A**30	CSPH*4212A**	OVLAAB036098	33,600	12.0	15.0
4609939	24ANB636A**30	CSPH*4212A**	OVLAAB048112	34,000	12.5	15.5
4609940	24ANB636A**30	CSPH*4212A**	OVLAAB060154	34,600	13.0	16.0
4609936	24ANB636A**30	CSPH*4212A**	OVMAAB036098	33,600	12.0	15.0
4609938	24ANB636A**30	CSPH*4212A**	OVMAAB042112	33,800	12.5	15.5
4609692	24ANB636A**30	CSPH*4212A**+TDR		34,000	11.5	14.0
4609874	24ANB636A**30	CSPH*4812A**	58CV(A,X)070–12	33,800	12.5	15.5
4609875	24ANB636A**30	CSPH*4812A**	58CV(A,X)090–16	33,800	13.0	16.0
4609876	24ANB636A**30	CSPH*4812A**	58CV(A,X)110–20	34,000	13.0	16.0
4609877	24ANB636A**30	CSPH*4812A**	58CV(A,X)135–22	34,000	13.0	16.0
4609878	24ANB636A**30	CSPH*4812A**	58CV(A,X)155–22	34,000	13.0	16.0
4609883	24ANB636A**30	CSPH*4812A**	58MEB040–12	34,200	13.0	16.0
4609884	24ANB636A**30	CSPH*4812A**	58MEC060–12	34,200	13.0	16.0
4609885	24ANB636A**30	CSPH*4812A**	58MEC080–12	34,200	13.0	16.0
4609886	24ANB636A**30	CSPH*4812A**	58MEC080–16	34,200	13.0	16.0
4609887	24ANB636A**30	CSPH*4812A**	58MEC100–20	34,000	13.0	16.0
4609869	24ANB636A**30	CSPH*4812A**	58MV(B,C)060–14	34,000	13.0	16.0
4609870	24ANB636A**30	CSPH*4812A**	58MV(B,C)080–14	34,000	12.5	15.5
4609871	24ANB636A**30	CSPH*4812A**	58MV(B,C)080–20	33,800	13.0	16.0
4609872	24ANB636A**30	CSPH*4812A**	58MV(B,C)100–20	34,000	13.0	16.0
4609873	24ANB636A**30	CSPH*4812A**	58MV(B,C)120–20	34,000	13.0	16.0
4609868	24ANB636A**30	CSPH*4812A**	58MVB040–14	33,800	12.5	15.5
4609879	24ANB636A**30	CSPH*4812A**	58PH*045–08	34,000	12.0	15.0
4609880	24ANB636A**30	CSPH*4812A**	58PH*070–16	34,000	12.5	15.2
4609881	24ANB636A**30	CSPH*4812A**	58PH*090–16	34,200	13.0	16.0
4609882	24ANB636A**30	CSPH*4812A**	58PH*110–20	34,400	13.0	16.0
4609867	24ANB636A**30	CSPH*4812A**+TDR		34,200	11.5	14.0
4609717	24ANB636A**30	FB4CNF036+TXV		33,000	12.0	14.5
4609718	24ANB636A**30	FB4CNF042+TXV		34,200	12.5	15.5
4609719	24ANB636A**30	FB4CNF048+TXV		34,200	12.5	15.0
4638129	24ANB636A**30	FE4AN(B,F)003+UI		33,200	13.0	16.0
4638130	24ANB636A**30	FE4AN(B,F)005+UI		34,200	13.0	16.0
4638131	24ANB636A**30	FE4ANB006+UI		34,600	13.5	16.5

See notes on page 35

COMBINATION RATINGS CONTINUED

AHRI Ref. Number	Model Number	Indoor Coil Model Number	Furnace Model Number	Cooling Capacity	EER	SEER
4638128	24ANB636A**30	FE4ANF002+UI		33,000	12.0	15.0
4638132	24ANB636A**30	FE5ANB004+UI		34,600	13.5	16.5
4609725	24ANB636A**30	FF1ENP036		33,000	11.0	13.5
4609726	24ANB636A**30	FF1ENP037		33,200	11.5	14.0
4638134	24ANB636A**30	FV4CN(B,F)003		33,200	13.0	16.0
4638135	24ANB636A**30	FV4CN(B,F)005		34,200	13.0	16.0
4638136	24ANB636A**30	FV4CNB006		34,600	13.5	16.5
4638133	24ANB636A**30	FV4CNF002		33,000	12.0	15.0
4609722	24ANB636A**30	FX4DN(B,F)037		34,200	13.0	16.0
4609723	24ANB636A**30	FX4DN(B,F)043		34,200	13.0	16.0
4609724	24ANB636A**30	FX4DN(B,F)049		34,800	13.0	16.0
4609720	24ANB636A**30	FY5BNF036+TXV		33,400	12.0	14.5
4609721	24ANB636A**30	FY5BNF042+TXV		33,800	12.0	14.5
4638138	24ANB637A**30	FE4AN(B,F)003+UI		33,800	13.0	16.0
4638139	24ANB637A**30	FE4AN(B,F)005+UI		34,800	13.5	16.0
4638140	24ANB637A**30	FE4ANB006+UI		35,200	13.5	16.5
4638137	24ANB637A**30	FE4ANF002+UI		33,600	12.5	15.5
4638141	24ANB637A**30	FE5ANB004+UI		35,200	13.5	16.5
4638143	24ANB637A**30	FV4CN(B,F)003		33,800	13.0	16.0
4638144	24ANB637A**30	FV4CN(B,F)005		34,800	13.0	16.0
4638145	24ANB637A**30	FV4CNB006		35,200	13.5	16.5
4638142	24ANB637A**30	FV4CNF002		33,600	12.5	15.5
4610494	24ANB642A**30	†CNPV*4324A**+TDR		42,000	12.0	14.5
4610718	24ANB642A**30	CAP**4221A**	58CV(A,X)090–16	40,000	12.5	15.2
4610499	24ANB642A**30	CAP**4221A**	58CV(A,X)110–20	40,000	13.0	15.2
4610720	24ANB642A**30	CAP**4221A**	58MEB040–12	40,500	12.5	15.0
4610721	24ANB642A**30	CAP**4221A**	58MEC060–12	40,500	12.5	15.0
4610722	24ANB642A**30	CAP**4221A**	58MEC080–12	40,500	12.5	15.0
4610723	24ANB642A**30	CAP**4221A**	58MEC080–16	40,000	12.5	15.0
4610502	24ANB642A**30	CAP**4221A**	58MEC100–20	40,500	13.0	15.5
4610867	24ANB642A**30	CAP**4221A**	58MV(B,C)060–14	40,500	12.5	15.0
4610496	24ANB642A**30	CAP**4221A**	58MV(B,C)080–14	40,000	12.5	14.5
4610497	24ANB642A**30	CAP**4221A**	58MV(B,C)080–20	40,000	12.5	15.0
4610498	24ANB642A**30	CAP**4221A**	58MV(B,C)100–20	40,000	12.5	15.0
4610719	24ANB642A**30	CAP**4221A**	58PH*070–16	40,000	12.0	14.5
4610500	24ANB642A**30	CAP**4221A**	58PH*090–16	40,500	13.0	15.2
4610501	24ANB642A**30	CAP**4221A**	58PH*110–20	40,500	13.0	15.5
4644744	24ANB642A**30	CAP**4221A**	58UVB080–14	40,000	12.5	14.5
4644745	24ANB642A**30	CAP**4221A**	58UVB080–20	40,000	12.5	15.0
4644746	24ANB642A**30	CAP**4221A**	58UVB100–20	40,000	12.7	15.0
4610868	24ANB642A**30	CAP**4221A**	OVLAAB048112	40,000	12.0	14.5
4610495	24ANB642A**30	CAP**4221A**+TDR		40,500	11.5	14.0
4610727	24ANB642A**30	CAP**4224A**	58CV(A,X)110–20	40,000	13.0	15.5
4610506	24ANB642A**30	CAP**4224A**	58CV(A,X)135–22	40,500	13.0	15.5
4610507	24ANB642A**30	CAP**4224A**	58CV(A,X)155–22	40,000	13.0	16.0
4610510	24ANB642A**30	CAP**4224A**	58HDV100––20	40,500	12.5	15.0
4610730	24ANB642A**30	CAP**4224A**	58MEC100–20	40,500	13.0	15.5
4610509	24ANB642A**30	CAP**4224A**	58MEC120–20	40,500	13.0	15.5
4610724	24ANB642A**30	CAP**4224A**	58MV(B,C)080–14	40,000	12.5	15.0
4610725	24ANB642A**30	CAP**4224A**	58MV(B,C)080–20	40,000	12.5	15.0
4610726	24ANB642A**30	CAP**4224A**	58MV(B,C)100–20	40,000	12.5	15.0
4610505	24ANB642A**30	CAP**4224A**	58MV(B,C)120–20	40,000	13.0	15.2
4610504	24ANB642A**30	CAP**4224A**	58MVB040–14	40,000	12.5	15.0
4610728	24ANB642A**30	CAP**4224A**	58PH*090–16	40,500	13.0	15.5
4610729	24ANB642A**30	CAP**4224A**	58PH*110–20	40,500	13.0	15.5
4610508	24ANB642A**30	CAP**4224A**	58PH*135–20	40,500	13.0	15.5
4644747	24ANB642A**30	CAP**4224A**	58UVB120–20	40,000	12.7	15.5
4610503	24ANB642A**30	CAP**4224A**+TDR		40,500	11.5	14.0
4610731	24ANB642A**30	CAP**4817A**	58CV(A,X)070–12	41,000	12.5	15.0
4610513	24ANB642A**30	CAP**4817A**	58CV(A,X)090–16	41,000	13.0	15.5
4610515	24ANB642A**30	CAP**4817A**	58MEB040–12	41,500	13.0	15.2
4610516	24ANB642A**30	CAP**4817A**	58MEC060–12	41,500	12.5	15.2
4610517	24ANB642A**30	CAP**4817A**	58MEC080–12	41,500	13.0	15.5
4610518	24ANB642A**30	CAP**4817A**	58MEC080–16	41,000	13.0	15.5
4610512	24ANB642A**30	CAP**4817A**	58MV(B,C)060–14	41,000	12.5	15.2
4610514	24ANB642A**30	CAP**4817A**	58PH*070–16	41,000	12.0	14.5
4644748	24ANB642A**30	CAP**4817A**	58UVB060–14	41,000	12.7	15.2
4610869	24ANB642A**30	CAP**4817A**	OVMAAB042112	41,000	12.5	15.0
4610511	24ANB642A**30	CAP**4817A**+TDR		41,500	12.0	14.0
4610733	24ANB642A**30	CAP**4821A**	58CV(A,X)090–16	40,500	13.0	15.5
4610523	24ANB642A**30	CAP**4821A**	58CV(A,X)110–20	41,000	13.0	15.5
4610735	24ANB642A**30	CAP**4821A**	58MEB040–12	41,000	12.5	15.2
4610736	24ANB642A**30	CAP**4821A**	58MEC060–12	41,000	12.5	15.0
4610737	24ANB642A**30	CAP**4821A**	58MEC080–12	41,000	12.5	15.2
4610738	24ANB642A**30	CAP**4821A**	58MEC080–16	41,000	12.5	15.2
4610526	24ANB642A**30	CAP**4821A**	58MEC100–20	41,000	13.0	15.5
4610732	24ANB642A**30	CAP**4821A**	58MV(B,C)060–14	41,000	12.5	15.0
4610520	24ANB642A**30	CAP**4821A**	58MV(B,C)080–14	40,500	12.5	15.0
4610521	24ANB642A**30	CAP**4821A**	58MV(B,C)080–20	40,500	12.5	15.0

See notes on page 35

COMBINATION RATINGS CONTINUED

AHRI Ref. Number	Model Number	Indoor Coil Model Number	Furnace Model Number	Cooling Capacity	EER	SEER
4610522	24ANB642A**30	CAP**4821A**	58MV(B,C)100−20	40,500	12.5	15.0
4610734	24ANB642A**30	CAP**4821A**	58PH*070−16	40,500	12.0	14.5
4610524	24ANB642A**30	CAP**4821A**	58PH*090−16	41,000	13.0	15.5
4610525	24ANB642A**30	CAP**4821A**	58PH*110−20	41,000	13.0	16.0
4644749	24ANB642A**30	CAP**4821A**	58UVB080−14	40,500	12.5	15.0
4644750	24ANB642A**30	CAP**4821A**	58UVB080−20	40,500	12.7	15.2
4644751	24ANB642A**30	CAP**4821A**	58UVB100−20	40,500	12.7	15.2
4610870	24ANB642A**30	CAP**4821A**	OVLAAB048112	41,000	12.5	14.5
4610519	24ANB642A**30	CAP**4821A**+TDR		41,000	12.0	14.0
4610536	24ANB642A**30	CAP**4823A**	58HDV080−−20	41,000	12.5	15.0
4610535	24ANB642A**30	CAP**4823A**+TDR		41,000	12.0	14.0
4610742	24ANB642A**30	CAP**4824A**	58CV(A,X)110−20	41,000	13.0	15.5
4610530	24ANB642A**30	CAP**4824A**	58CV(A,X)135−22	41,000	13.0	16.0
4610531	24ANB642A**30	CAP**4824A**	58CV(A,X)155−22	41,000	13.0	16.0
4610534	24ANB642A**30	CAP**4824A**	58HDV100−−20	41,000	12.5	15.5
4610745	24ANB642A**30	CAP**4824A**	58MEC100−20	41,000	13.0	16.0
4610533	24ANB642A**30	CAP**4824A**	58MEC120−20	41,000	13.0	16.0
4610739	24ANB642A**30	CAP**4824A**	58MV(B,C)080−14	40,500	12.5	15.0
4610740	24ANB642A**30	CAP**4824A**	58MV(B,C)080−20	40,500	12.5	15.2
4610741	24ANB642A**30	CAP**4824A**	58MV(B,C)100−20	40,500	12.5	15.2
4610529	24ANB642A**30	CAP**4824A**	58MV(B,C)120−20	40,500	13.0	15.5
4610528	24ANB642A**30	CAP**4824A**	58MVB040−14	40,500	12.5	15.0
4610743	24ANB642A**30	CAP**4824A**	58PH*090−16	41,000	13.0	15.5
4610744	24ANB642A**30	CAP**4824A**	58PH*110−20	41,000	13.0	16.0
4610532	24ANB642A**30	CAP**4824A**	58PH*135−20	41,000	13.0	15.5
4644752	24ANB642A**30	CAP**4824A**	58UVB120−20	40,500	13.0	15.5
4610527	24ANB642A**30	CAP**4824A**+TDR		41,000	12.0	14.0
4610751	24ANB642A**30	CAP**6021A**	58CV(A,X)090−16	41,500	13.0	16.0
4610752	24ANB642A**30	CAP**6021A**	58CV(A,X)110−20	41,500	13.0	16.0
4610756	24ANB642A**30	CAP**6021A**	58MEB040−12	42,000	13.0	15.5
4610757	24ANB642A**30	CAP**6021A**	58MEC060−12	41,500	13.0	15.5
4610758	24ANB642A**30	CAP**6021A**	58MEC080−12	41,500	13.0	15.5
4610759	24ANB642A**30	CAP**6021A**	58MEC080−16	41,500	13.0	15.5
4610760	24ANB642A**30	CAP**6021A**	58MEC100−20	41,500	13.0	16.0
4610747	24ANB642A**30	CAP**6021A**	58MV(B,C)060−14	41,500	13.0	15.5
4610748	24ANB642A**30	CAP**6021A**	58MV(B,C)080−14	41,000	12.5	15.0
4610749	24ANB642A**30	CAP**6021A**	58MV(B,C)080−20	41,500	13.0	15.5
4610750	24ANB642A**30	CAP**6021A**	58MV(B,C)100−20	41,000	13.0	15.5
4610753	24ANB642A**30	CAP**6021A**	58PH*070−16	41,500	12.5	15.0
4610754	24ANB642A**30	CAP**6021A**	58PH*090−16	41,500	13.0	16.0
4610755	24ANB642A**30	CAP**6021A**	58PH*110−20	41,500	13.0	16.0
4610746	24ANB642A**30	CAP**6021A**+TDR		42,000	12.0	14.5
4610767	24ANB642A**30	CAP**6024A**	58CV(A,X)110−20	41,500	13.0	16.0
4610768	24ANB642A**30	CAP**6024A**	58CV(A,X)135−22	41,500	13.0	16.0
4610769	24ANB642A**30	CAP**6024A**	58CV(A,X)155−22	41,500	13.0	16.0
4610773	24ANB642A**30	CAP**6024A**	58MEC100−20	42,000	13.0	16.0
4610774	24ANB642A**30	CAP**6024A**	58MEC120−20	42,000	13.0	16.0
4610763	24ANB642A**30	CAP**6024A**	58MV(B,C)080−14	41,500	12.5	15.2
4610764	24ANB642A**30	CAP**6024A**	58MV(B,C)080−20	41,500	13.0	15.5
4610765	24ANB642A**30	CAP**6024A**	58MV(B,C)100−20	41,000	13.0	15.5
4610766	24ANB642A**30	CAP**6024A**	58MV(B,C)120−20	41,500	13.0	16.0
4610762	24ANB642A**30	CAP**6024A**	58MVB040−14	41,000	13.0	15.2
4610770	24ANB642A**30	CAP**6024A**	58PH*090−16	41,500	13.0	16.0
4610771	24ANB642A**30	CAP**6024A**	58PH*110−20	41,500	13.0	16.0
4610772	24ANB642A**30	CAP**6024A**	58PH*135−20	41,500	13.0	16.0
4610761	24ANB642A**30	CAP**6024A**+TDR		42,000	12.0	14.5
4610776	24ANB642A**30	CAP**6025A**	58HDV080−−20	42,000	13.0	15.0
4610777	24ANB642A**30	CAP**6025A**	58HDV100−−20	41,500	13.0	15.5
4610775	24ANB642A**30	CAP**6025A**+TDR		42,000	12.0	14.5
4610651	24ANB642A**30	CNPF*4818A**+TDR		41,000	12.0	14.0
4610583	24ANB642A**30	CNPH*4221A**	58CV(A,X)070−12	40,000	12.5	14.5
4610584	24ANB642A**30	CNPH*4221A**	58CV(A,X)090−16	40,000	12.5	15.0
4610585	24ANB642A**30	CNPH*4221A**	58CV(A,X)110−20	40,000	12.5	15.0
4610586	24ANB642A**30	CNPH*4221A**	58CV(A,X)135−22	40,500	13.0	15.5
4610587	24ANB642A**30	CNPH*4221A**	58CV(A,X)155−22	40,500	13.0	15.5
4610598	24ANB642A**30	CNPH*4221A**	58HDV060−−12	40,000	12.0	14.0
4610599	24ANB642A**30	CNPH*4221A**	58HDV080−−20	40,500	12.0	14.5
4610600	24ANB642A**30	CNPH*4221A**	58HDV100−−20	40,500	12.5	15.0
4610592	24ANB642A**30	CNPH*4221A**	58MEB040−12	40,500	12.5	15.0
4610593	24ANB642A**30	CNPH*4221A**	58MEC060−12	40,500	12.5	15.0
4610594	24ANB642A**30	CNPH*4221A**	58MEC080−12	40,500	12.5	15.0
4610595	24ANB642A**30	CNPH*4221A**	58MEC080−16	40,000	12.5	15.0
4610596	24ANB642A**30	CNPH*4221A**	58MEC100−20	40,500	13.0	15.5
4610597	24ANB642A**30	CNPH*4221A**	58MEC120−20	40,500	13.0	15.5
4610578	24ANB642A**30	CNPH*4221A**	58MV(B,C)060−14	40,500	12.5	15.0
4610579	24ANB642A**30	CNPH*4221A**	58MV(B,C)080−14	40,000	12.0	14.5
4610580	24ANB642A**30	CNPH*4221A**	58MV(B,C)080−20	40,000	12.5	14.5
4610581	24ANB642A**30	CNPH*4221A**	58MV(B,C)100−20	40,000	12.5	15.0
4610582	24ANB642A**30	CNPH*4221A**	58MV(B,C)120−20	40,000	12.5	15.0
4610577	24ANB642A**30	CNPH*4221A**	58MVB040−14	40,000	12.5	14.5

See notes on page 35

COMBINATION RATINGS CONTINUED

AHRI Ref. Number	Model Number	Indoor Coil Model Number	Furnace Model Number	Cooling Capacity	EER	SEER
4610588	24ANB642A**30	CNPH*4221A**	58PH*070−16	40,000	12.0	14.5
4610589	24ANB642A**30	CNPH*4221A**	58PH*090−16	40,500	12.5	15.0
4610590	24ANB642A**30	CNPH*4221A**	58PH*110−20	40,500	13.0	15.5
4610591	24ANB642A**30	CNPH*4221A**	58PH*135−20	40,000	12.5	15.0
4610875	24ANB642A**30	CNPH*4221A**	OVLAAB048112	40,500	12.0	14.5
4610876	24ANB642A**30	CNPH*4221A**	OVLAAB060154	41,000	12.5	15.0
4610874	24ANB642A**30	CNPH*4221A**	OVMAAB042112	40,000	12.5	14.5
4610576	24ANB642A**30	CNPH*4221A**+TDR		40,500	12.0	14.0
4610608	24ANB642A**30	CNPH*4321A**	58CV(A,X)070−12	41,000	12.5	15.0
4610609	24ANB642A**30	CNPH*4321A**	58CV(A,X)090−16	41,500	13.0	16.0
4610610	24ANB642A**30	CNPH*4321A**	58CV(A,X)110−20	41,500	13.0	16.0
4610611	24ANB642A**30	CNPH*4321A**	58CV(A,X)135−22	41,500	13.0	16.0
4610612	24ANB642A**30	CNPH*4321A**	58CV(A,X)155−22	41,500	13.0	16.0
4610623	24ANB642A**30	CNPH*4321A**	58HDV060−−12	41,500	12.0	14.5
4610624	24ANB642A**30	CNPH*4321A**	58HDV080−−20	42,000	12.5	15.2
4610625	24ANB642A**30	CNPH*4321A**	58HDV100−−20	41,500	13.0	15.5
4610617	24ANB642A**30	CNPH*4321A**	58MEB040−12	42,000	13.0	15.5
4610618	24ANB642A**30	CNPH*4321A**	58MEC060−12	41,500	13.0	15.5
4610619	24ANB642A**30	CNPH*4321A**	58MEC080−12	41,500	13.0	15.5
4610620	24ANB642A**30	CNPH*4321A**	58MEC080−16	41,500	13.0	15.5
4610621	24ANB642A**30	CNPH*4321A**	58MEC100−20	41,500	13.0	16.0
4610622	24ANB642A**30	CNPH*4321A**	58MEC120−20	42,000	13.0	16.0
4610603	24ANB642A**30	CNPH*4321A**	58MV(B,C)060−14	41,500	13.0	15.5
4610604	24ANB642A**30	CNPH*4321A**	58MV(B,C)080−14	41,500	12.5	15.0
4610605	24ANB642A**30	CNPH*4321A**	58MV(B,C)080−20	41,500	13.0	15.5
4610606	24ANB642A**30	CNPH*4321A**	58MV(B,C)100−20	41,000	13.0	15.5
4610607	24ANB642A**30	CNPH*4321A**	58MV(B,C)120−20	41,500	13.0	16.0
4610602	24ANB642A**30	CNPH*4321A**	58MVB040−14	41,000	12.5	15.0
4610613	24ANB642A**30	CNPH*4321A**	58PH*070−16	41,500	12.5	15.0
4610614	24ANB642A**30	CNPH*4321A**	58PH*090−16	41,500	13.0	16.0
4610615	24ANB642A**30	CNPH*4321A**	58PH*110−20	41,500	13.0	16.0
4610616	24ANB642A**30	CNPH*4321A**	58PH*135−20	41,500	13.0	16.0
4610878	24ANB642A**30	CNPH*4321A**	OVLAAB048112	41,500	12.5	15.0
4610879	24ANB642A**30	CNPH*4321A**	OVLAAB060154	42,000	13.0	15.5
4610877	24ANB642A**30	CNPH*4321A**	OVMAAB042112	41,500	13.0	15.5
4610601	24ANB642A**30	CNPH*4321A**+TDR		42,000	12.0	14.5
4610633	24ANB642A**30	CNPH*4821A**	58CV(A,X)070−12	40,500	12.5	15.0
4610634	24ANB642A**30	CNPH*4821A**	58CV(A,X)090−16	41,000	13.0	15.5
4610635	24ANB642A**30	CNPH*4821A**	58CV(A,X)110−20	41,000	13.0	16.0
4610636	24ANB642A**30	CNPH*4821A**	58CV(A,X)135−22	41,000	13.0	16.0
4610637	24ANB642A**30	CNPH*4821A**	58CV(A,X)155−22	41,000	13.0	16.0
4610648	24ANB642A**30	CNPH*4821A**	58HDV060−−12	41,000	12.0	14.5
4610649	24ANB642A**30	CNPH*4821A**	58HDV080−−20	41,500	12.5	15.0
4610650	24ANB642A**30	CNPH*4821A**	58HDV100−−20	41,000	12.5	15.5
4610642	24ANB642A**30	CNPH*4821A**	58MEB040−12	41,000	13.0	15.2
4610643	24ANB642A**30	CNPH*4821A**	58MEC060−12	41,000	12.5	15.0
4610644	24ANB642A**30	CNPH*4821A**	58MEC080−12	41,000	13.0	15.5
4610645	24ANB642A**30	CNPH*4821A**	58MEC080−16	41,000	13.0	15.5
4610646	24ANB642A**30	CNPH*4821A**	58MEC100−20	41,000	13.0	16.0
4610647	24ANB642A**30	CNPH*4821A**	58MEC120−20	41,500	13.0	16.0
4610628	24ANB642A**30	CNPH*4821A**	58MV(B,C)060−14	41,000	13.0	15.5
4610629	24ANB642A**30	CNPH*4821A**	58MV(B,C)080−14	41,000	12.5	15.0
4610630	24ANB642A**30	CNPH*4821A**	58MV(B,C)080−20	41,000	12.5	15.2
4610631	24ANB642A**30	CNPH*4821A**	58MV(B,C)100−20	40,500	13.0	15.5
4610632	24ANB642A**30	CNPH*4821A**	58MV(B,C)120−20	41,000	13.0	15.5
4610627	24ANB642A**30	CNPH*4821A**	58MVB040−14	40,500	12.5	15.0
4610638	24ANB642A**30	CNPH*4821A**	58PH*070−16	41,000	12.0	14.5
4610639	24ANB642A**30	CNPH*4821A**	58PH*090−16	41,000	13.0	15.5
4610640	24ANB642A**30	CNPH*4821A**	58PH*110−20	41,000	13.0	16.0
4610641	24ANB642A**30	CNPH*4821A**	58PH*135−20	41,000	13.0	16.0
4610881	24ANB642A**30	CNPH*4821A**	OVLAAB048112	41,000	12.5	15.0
4610882	24ANB642A**30	CNPH*4821A**	OVLAAB060154	42,000	13.0	15.5
4610880	24ANB642A**30	CNPH*4821A**	OVMAAB042112	41,000	12.5	15.0
4610626	24ANB642A**30	CNPH*4821A**+TDR		41,000	12.0	14.0
4610828	24ANB642A**30	CNPH*6024A**	58CV(A,X)070−12	41,000	13.0	15.2
4610829	24ANB642A**30	CNPH*6024A**	58CV(A,X)090−16	41,500	13.0	16.0
4610830	24ANB642A**30	CNPH*6024A**	58CV(A,X)110−20	41,500	13.0	16.0
4610831	24ANB642A**30	CNPH*6024A**	58CV(A,X)135−22	41,500	13.0	16.0
4610832	24ANB642A**30	CNPH*6024A**	58CV(A,X)155−22	41,500	13.0	16.0
4610837	24ANB642A**30	CNPH*6024A**	58MEB040−12	42,000	13.0	15.5
4610838	24ANB642A**30	CNPH*6024A**	58MEC060−12	42,000	13.0	15.5
4610839	24ANB642A**30	CNPH*6024A**	58MEC080−12	42,000	13.0	15.5
4610840	24ANB642A**30	CNPH*6024A**	58MEC080−16	41,500	13.0	15.5
4610841	24ANB642A**30	CNPH*6024A**	58MEC100−20	42,000	13.0	16.0
4610842	24ANB642A**30	CNPH*6024A**	58MEC120−20	42,000	13.0	16.0
4610823	24ANB642A**30	CNPH*6024A**	58MV(B,C)060−14	41,500	13.0	15.5
4610824	24ANB642A**30	CNPH*6024A**	58MV(B,C)080−14	41,500	13.0	15.5
4610825	24ANB642A**30	CNPH*6024A**	58MV(B,C)080−20	41,500	13.0	15.5
4610826	24ANB642A**30	CNPH*6024A**	58MV(B,C)100−20	41,000	13.0	15.5
4610827	24ANB642A**30	CNPH*6024A**	58MV(B,C)120−20	41,500	13.0	16.0

See notes on page 35

COMBINATION RATINGS CONTINUED

AHRI Ref. Number	Model Number	Indoor Coil Model Number	Furnace Model Number	Cooling Capacity	EER	SEER
4610822	24ANB642A**30	CNPH*6024A**	58MVB040−14	41,000	13.0	15.5
4610833	24ANB642A**30	CNPH*6024A**	58PH*070−16	41,500	12.5	14.5
4610834	24ANB642A**30	CNPH*6024A**	58PH*090−16	41,500	13.0	16.0
4610835	24ANB642A**30	CNPH*6024A**	58PH*110−20	42,000	13.0	16.0
4610836	24ANB642A**30	CNPH*6024A**	58PH*135−20	42,000	13.0	16.0
4610821	24ANB642A**30	CNPH*6024A**+TDR		41,500	12.0	14.5
4610778	24ANB642A**30	CNPV*4217A**	58CV(A,X)070−12	40,500	12.5	14.5
4610539	24ANB642A**30	CNPV*4217A**	58CV(A,X)090−16	40,500	12.5	15.2
4610889	24ANB642A**30	CNPV*4217A**	58HDV060−−12	40,500	12.0	14.5
4610541	24ANB642A**30	CNPV*4217A**	58MEB040−12	40,500	12.5	15.0
4610542	24ANB642A**30	CNPV*4217A**	58MEC060−12	40,500	12.5	15.0
4610543	24ANB642A**30	CNPV*4217A**	58MEC080−12	40,500	12.5	15.0
4610544	24ANB642A**30	CNPV*4217A**	58MEC080−16	40,500	12.5	15.0
4610538	24ANB642A**30	CNPV*4217A**	58MV(B,C)060−14	40,500	12.5	15.0
4610540	24ANB642A**30	CNPV*4217A**	58PH*070−16	40,500	12.0	14.5
4644753	24ANB642A**30	CNPV*4217A**	58UVB060−14	40,500	12.5	15.0
4610871	24ANB642A**30	CNPV*4217A**	OVMAAB042112	40,500	12.5	14.5
4610537	24ANB642A**30	CNPV*4217A**+TDR		41,000	12.0	14.0
4610780	24ANB642A**30	CNPV*4221A**	58CV(A,X)090−16	40,000	12.5	15.0
4610549	24ANB642A**30	CNPV*4221A**	58CV(A,X)110−20	40,000	12.5	15.0
4610890	24ANB642A**30	CNPV*4221A**	58HDV060−−12	40,000	12.0	14.5
4610891	24ANB642A**30	CNPV*4221A**	58HDV080−−20	40,500	12.5	15.0
4610782	24ANB642A**30	CNPV*4221A**	58MEB040−12	40,500	12.5	15.0
4610783	24ANB642A**30	CNPV*4221A**	58MEC060−12	40,500	12.5	15.0
4610784	24ANB642A**30	CNPV*4221A**	58MEC080−12	40,500	12.5	15.0
4610785	24ANB642A**30	CNPV*4221A**	58MEC080−16	40,000	12.5	15.0
4610552	24ANB642A**30	CNPV*4221A**	58MEC100−20	40,500	13.0	15.5
4610779	24ANB642A**30	CNPV*4221A**	58MV(B,C)060−14	40,500	12.5	15.0
4610546	24ANB642A**30	CNPV*4221A**	58MV(B,C)080−14	40,000	12.0	14.5
4610547	24ANB642A**30	CNPV*4221A**	58MV(B,C)080−20	40,000	12.5	14.5
4610548	24ANB642A**30	CNPV*4221A**	58MV(B,C)100−20	40,000	12.5	15.0
4610781	24ANB642A**30	CNPV*4221A**	58PH*070−16	40,000	12.0	14.5
4610550	24ANB642A**30	CNPV*4221A**	58PH*090−16	40,500	12.5	15.2
4610551	24ANB642A**30	CNPV*4221A**	58PH*110−20	40,500	13.0	15.5
4644754	24ANB642A**30	CNPV*4221A**	58UVB080−14	40,000	12.2	14.5
4644755	24ANB642A**30	CNPV*4221A**	58UVB080−20	40,000	12.5	14.5
4644756	24ANB642A**30	CNPV*4221A**	58UVB100−20	40,000	12.5	15.0
4610872	24ANB642A**30	CNPV*4221A**	OVLAAB048112	40,500	12.0	14.5
4610545	24ANB642A**30	CNPV*4221A**+TDR		40,500	12.0	14.0
4610789	24ANB642A**30	CNPV*4324A**	58CV(A,X)110−20	41,500	13.0	16.0
4610555	24ANB642A**30	CNPV*4324A**	58CV(A,X)135−22	41,500	13.0	16.0
4610556	24ANB642A**30	CNPV*4324A**	58CV(A,X)155−22	41,500	13.0	16.0
4610892	24ANB642A**30	CNPV*4324A**	58HDV080−−20	42,000	13.0	15.5
4610559	24ANB642A**30	CNPV*4324A**	58HDV100−−20	41,500	13.0	16.0
4610792	24ANB642A**30	CNPV*4324A**	58MEC100−20	42,000	13.0	16.0
4610558	24ANB642A**30	CNPV*4324A**	58MEC120−20	42,000	13.0	16.0
4610786	24ANB642A**30	CNPV*4324A**	58MV(B,C)080−14	41,500	13.0	15.5
4610787	24ANB642A**30	CNPV*4324A**	58MV(B,C)080−20	41,500	13.0	15.5
4610788	24ANB642A**30	CNPV*4324A**	58MV(B,C)100−20	41,000	13.0	15.5
4610554	24ANB642A**30	CNPV*4324A**	58MV(B,C)120−20	41,500	13.0	16.0
4610553	24ANB642A**30	CNPV*4324A**	58MVB040−14	41,000	13.0	15.5
4610790	24ANB642A**30	CNPV*4324A**	58PH*090−16	41,500	13.0	16.0
4610791	24ANB642A**30	CNPV*4324A**	58PH*110−20	42,000	13.0	16.0
4610557	24ANB642A**30	CNPV*4324A**	58PH*135−20	42,000	13.0	16.0
4644757	24ANB642A**30	CNPV*4324A**	58UVB120−20	41,500	13.2	16.0
4610794	24ANB642A**30	CNPV*4821A**	58CV(A,X)090−16	41,000	13.0	15.5
4610564	24ANB642A**30	CNPV*4821A**	58CV(A,X)110−20	41,000	13.0	16.0
4610893	24ANB642A**30	CNPV*4821A**	58HDV060−−12	41,000	12.0	14.5
4610894	24ANB642A**30	CNPV*4821A**	58HDV080−−20	41,500	13.0	15.0
4610796	24ANB642A**30	CNPV*4821A**	58MEB040−12	41,000	13.0	15.2
4610797	24ANB642A**30	CNPV*4821A**	58MEC060−12	41,000	12.5	15.2
4610798	24ANB642A**30	CNPV*4821A**	58MEC080−12	41,000	13.0	15.5
4610799	24ANB642A**30	CNPV*4821A**	58MEC080−16	41,000	13.0	15.5
4610567	24ANB642A**30	CNPV*4821A**	58MEC100−20	41,000	13.0	16.0
4610793	24ANB642A**30	CNPV*4821A**	58MV(B,C)060−14	41,000	13.0	15.5
4610561	24ANB642A**30	CNPV*4821A**	58MV(B,C)080−14	41,000	12.5	15.0
4610562	24ANB642A**30	CNPV*4821A**	58MV(B,C)080−20	41,000	12.5	15.2
4610563	24ANB642A**30	CNPV*4821A**	58MV(B,C)100−20	40,500	13.0	15.5
4610795	24ANB642A**30	CNPV*4821A**	58PH*070−16	41,000	12.0	14.5
4610565	24ANB642A**30	CNPV*4821A**	58PH*090−16	41,000	13.0	15.5
4610566	24ANB642A**30	CNPV*4821A**	58PH*110−20	41,000	13.0	16.0
4644758	24ANB642A**30	CNPV*4821A**	58UVB080−14	41,000	12.7	15.2
4644759	24ANB642A**30	CNPV*4821A**	58UVB080−20	41,000	12.7	15.2
4644760	24ANB642A**30	CNPV*4821A**	58UVB100−20	40,500	12.7	15.5
4610873	24ANB642A**30	CNPV*4821A**	OVLAAB048112	41,000	12.5	15.0
4610560	24ANB642A**30	CNPV*4821A**+TDR		41,000	12.0	14.0
4610803	24ANB642A**30	CNPV*4824A**	58CV(A,X)110−20	41,000	13.0	16.0
4610571	24ANB642A**30	CNPV*4824A**	58CV(A,X)135−22	41,000	13.0	16.0
4610572	24ANB642A**30	CNPV*4824A**	58CV(A,X)155−22	41,000	13.0	16.0
4610895	24ANB642A**30	CNPV*4824A**	58HDV080−−20	41,500	13.0	15.0

See notes on page 35

COMBINATION RATINGS CONTINUED

AHRI Ref. Number	Model Number	Indoor Coil Model Number	Furnace Model Number	Cooling Capacity	EER	SEER
4610575	24ANB642A**30	CNPV*4824A**	58HDV100– –20	41,000	12.5	15.5
4610806	24ANB642A**30	CNPV*4824A**	58MEC100–20	41,000	13.0	16.0
4610574	24ANB642A**30	CNPV*4824A**	58MEC120–20	41,500	13.0	16.0
4610800	24ANB642A**30	CNPV*4824A**	58MV(B,C)080–14	41,000	12.5	15.0
4610801	24ANB642A**30	CNPV*4824A**	58MV(B,C)080–20	41,000	12.5	15.2
4610802	24ANB642A**30	CNPV*4824A**	58MV(B,C)100–20	40,500	13.0	15.5
4610570	24ANB642A**30	CNPV*4824A**	58MV(B,C)120–20	41,000	13.0	15.5
4610569	24ANB642A**30	CNPV*4824A**	58MVB040–14	40,500	12.5	15.0
4610804	24ANB642A**30	CNPV*4824A**	58PH*090–16	41,000	13.0	15.5
4610805	24ANB642A**30	CNPV*4824A**	58PH*110–20	41,000	13.0	16.0
4610573	24ANB642A**30	CNPV*4824A**	58PH*135–20	41,000	13.0	16.0
4644761	24ANB642A**30	CNPV*4824A**	58UVB120–20	41,000	13.0	15.5
4610568	24ANB642A**30	CNPV*4824A**+TDR		41,000	12.0	14.0
4610813	24ANB642A**30	CNPV*6024A**	58CV(A,X)110–20	41,500	13.0	16.0
4610814	24ANB642A**30	CNPV*6024A**	58CV(A,X)135–22	41,500	13.0	16.0
4610815	24ANB642A**30	CNPV*6024A**	58CV(A,X)155–22	41,500	13.0	16.0
4610819	24ANB642A**30	CNPV*6024A**	58MEC100–20	42,000	13.0	16.0
4610820	24ANB642A**30	CNPV*6024A**	58MEC120–20	42,000	13.0	16.0
4610809	24ANB642A**30	CNPV*6024A**	58MV(B,C)080–14	41,500	13.0	15.5
4610810	24ANB642A**30	CNPV*6024A**	58MV(B,C)080–20	41,500	13.0	15.5
4610811	24ANB642A**30	CNPV*6024A**	58MV(B,C)100–20	41,000	13.0	15.5
4610812	24ANB642A**30	CNPV*6024A**	58MV(B,C)120–20	41,500	13.0	16.0
4610808	24ANB642A**30	CNPV*6024A**	58MVB040–14	41,000	13.0	15.5
4610816	24ANB642A**30	CNPV*6024A**	58PH*090–16	41,500	13.0	16.0
4610817	24ANB642A**30	CNPV*6024A**	58PH*110–20	42,000	13.0	16.0
4610818	24ANB642A**30	CNPV*6024A**	58PH*135–20	42,000	13.0	16.0
4610807	24ANB642A**30	CNPV*6024A**+TDR		41,500	12.0	14.5
4610659	24ANB642A**30	CSPH*4212A**	58CV(A,X)070–12	41,000	12.5	15.0
4610660	24ANB642A**30	CSPH*4212A**	58CV(A,X)090–16	41,000	13.0	15.5
4610661	24ANB642A**30	CSPH*4212A**	58CV(A,X)110–20	41,000	13.0	15.5
4610662	24ANB642A**30	CSPH*4212A**	58CV(A,X)135–22	41,000	13.0	16.0
4610663	24ANB642A**30	CSPH*4212A**	58CV(A,X)155–22	41,000	13.0	16.0
4610674	24ANB642A**30	CSPH*4212A**	58HDV060– –12	41,000	12.0	14.5
4610675	24ANB642A**30	CSPH*4212A**	58HDV080– –20	41,500	12.5	15.0
4610676	24ANB642A**30	CSPH*4212A**	58HDV100– –20	41,000	13.0	15.5
4610668	24ANB642A**30	CSPH*4212A**	58MEB040–12	41,500	13.0	15.2
4610669	24ANB642A**30	CSPH*4212A**	58MEC060–12	41,500	12.5	15.0
4610670	24ANB642A**30	CSPH*4212A**	58MEC080–12	41,500	13.0	15.5
4610671	24ANB642A**30	CSPH*4212A**	58MEC080–16	41,000	13.0	15.5
4610672	24ANB642A**30	CSPH*4212A**	58MEC100–20	41,000	13.0	16.0
4610673	24ANB642A**30	CSPH*4212A**	58MEC120–20	41,500	13.0	16.0
4610654	24ANB642A**30	CSPH*4212A**	58MV(B,C)060–14	41,000	12.5	15.2
4610655	24ANB642A**30	CSPH*4212A**	58MV(B,C)080–14	41,000	12.5	15.0
4610656	24ANB642A**30	CSPH*4212A**	58MV(B,C)080–20	41,000	12.5	15.0
4610657	24ANB642A**30	CSPH*4212A**	58MV(B,C)100–20	40,500	12.5	15.2
4610658	24ANB642A**30	CSPH*4212A**	58MV(B,C)120–20	41,000	13.0	15.5
4610653	24ANB642A**30	CSPH*4212A**	58MVB040–14	40,500	12.5	15.0
4610664	24ANB642A**30	CSPH*4212A**	58PH*070–16	41,000	12.0	14.5
4610665	24ANB642A**30	CSPH*4212A**	58PH*090–16	41,000	13.0	15.5
4610666	24ANB642A**30	CSPH*4212A**	58PH*110–20	41,000	13.0	16.0
4610667	24ANB642A**30	CSPH*4212A**	58PH*135–20	41,000	13.0	15.5
4610884	24ANB642A**30	CSPH*4212A**	OVLAAB048112	41,000	12.5	15.0
4610885	24ANB642A**30	CSPH*4212A**	OVLAAB060154	42,000	13.0	15.0
4610883	24ANB642A**30	CSPH*4212A**	OVMAAB042112	41,000	12.5	15.0
4610652	24ANB642A**30	CSPH*4212A**+TDR		41,500	12.0	14.0
4610684	24ANB642A**30	CSPH*4812A**	58CV(A,X)070–12	41,000	12.5	15.0
4610685	24ANB642A**30	CSPH*4812A**	58CV(A,X)090–16	41,000	13.0	15.5
4610686	24ANB642A**30	CSPH*4812A**	58CV(A,X)110–20	41,000	13.0	15.5
4610687	24ANB642A**30	CSPH*4812A**	58CV(A,X)135–22	41,500	13.0	16.0
4610688	24ANB642A**30	CSPH*4812A**	58CV(A,X)155–22	41,000	13.0	16.0
4610699	24ANB642A**30	CSPH*4812A**	58HDV060– –12	41,000	12.0	14.5
4610700	24ANB642A**30	CSPH*4812A**	58HDV080– –20	41,500	12.5	15.0
4610701	24ANB642A**30	CSPH*4812A**	58HDV100– –20	41,500	13.0	15.5
4610693	24ANB642A**30	CSPH*4812A**	58MEB040–12	41,500	13.0	15.5
4610694	24ANB642A**30	CSPH*4812A**	58MEC060–12	41,500	13.0	15.2
4610695	24ANB642A**30	CSPH*4812A**	58MEC080–12	41,500	13.0	15.5
4610696	24ANB642A**30	CSPH*4812A**	58MEC080–16	41,000	13.0	15.5
4610697	24ANB642A**30	CSPH*4812A**	58MEC100–20	41,500	13.0	16.0
4610698	24ANB642A**30	CSPH*4812A**	58MEC120–20	41,500	13.0	16.0
4610679	24ANB642A**30	CSPH*4812A**	58MV(B,C)060–14	41,500	13.0	15.2
4610680	24ANB642A**30	CSPH*4812A**	58MV(B,C)080–14	41,000	12.5	15.0
4610681	24ANB642A**30	CSPH*4812A**	58MV(B,C)080–20	41,000	12.5	15.0
4610682	24ANB642A**30	CSPH*4812A**	58MV(B,C)100–20	41,000	13.0	15.2
4610683	24ANB642A**30	CSPH*4812A**	58MV(B,C)120–20	41,000	13.0	15.5
4610678	24ANB642A**30	CSPH*4812A**	58MVB040–14	41,000	12.5	15.0
4610689	24ANB642A**30	CSPH*4812A**	58PH*070–16	41,000	12.5	14.5
4610690	24ANB642A**30	CSPH*4812A**	58PH*090–16	41,500	13.0	16.0
4610691	24ANB642A**30	CSPH*4812A**	58PH*110–20	41,500	13.0	16.0
4610692	24ANB642A**30	CSPH*4812A**	58PH*135–20	41,500	13.0	16.0
4610887	24ANB642A**30	CSPH*4812A**	OVLAAB048112	41,500	12.5	15.0

See notes on page 35

COMBINATION RATINGS CONTINUED

AHRI Ref. Number	Model Number	Indoor Coil Model Number	Furnace Model Number	Cooling Capacity	EER	SEER
4610888	24ANB642A**30	CSPH*4812A**	OVLAAB060154	42,000	13.0	15.5
4610886	24ANB642A**30	CSPH*4812A**	OVMAAB042112	41,000	12.5	15.0
4610677	24ANB642A**30	CSPH*4812A**+TDR		41,500	12.0	14.5
4610850	24ANB642A**30	CSPH*6012A**	58CV(A,X)070–12	41,500	13.0	15.5
4610851	24ANB642A**30	CSPH*6012A**	58CV(A,X)090–16	41,500	13.0	16.0
4610852	24ANB642A**30	CSPH*6012A**	58CV(A,X)110–20	41,500	13.0	16.0
4610853	24ANB642A**30	CSPH*6012A**	58CV(A,X)135–22	41,500	13.0	16.0
4610854	24ANB642A**30	CSPH*6012A**	58CV(A,X)155–22	41,500	13.0	16.0
4610859	24ANB642A**30	CSPH*6012A**	58MEB040–12	42,000	13.0	15.5
4610860	24ANB642A**30	CSPH*6012A**	58MEC060–12	42,000	13.0	15.5
4610861	24ANB642A**30	CSPH*6012A**	58MEC080–12	42,000	13.0	16.0
4610862	24ANB642A**30	CSPH*6012A**	58MEC080–16	42,000	13.0	16.0
4610863	24ANB642A**30	CSPH*6012A**	58MEC100–20	42,000	13.0	16.0
4610864	24ANB642A**30	CSPH*6012A**	58MEC120–20	42,000	13.0	16.0
4610845	24ANB642A**30	CSPH*6012A**	58MV(B,C)060–14	42,000	13.0	16.0
4610846	24ANB642A**30	CSPH*6012A**	58MV(B,C)080–14	41,500	13.0	15.5
4610847	24ANB642A**30	CSPH*6012A**	58MV(B,C)080–20	41,500	13.0	15.5
4610848	24ANB642A**30	CSPH*6012A**	58MV(B,C)100–20	41,500	13.0	15.5
4610849	24ANB642A**30	CSPH*6012A**	58MV(B,C)120–20	41,500	13.0	16.0
4610844	24ANB642A**30	CSPH*6012A**	58MVB040–14	41,500	13.0	15.5
4610855	24ANB642A**30	CSPH*6012A**	58PH*070–16	41,500	12.5	15.0
4610856	24ANB642A**30	CSPH*6012A**	58PH*090–16	42,000	13.0	16.0
4610857	24ANB642A**30	CSPH*6012A**	58PH*110–20	42,000	13.0	16.0
4610858	24ANB642A**30	CSPH*6012A**	58PH*135–20	42,000	13.0	16.0
4610843	24ANB642A**30	CSPH*6012A**+TDR		42,000	12.0	14.5
4610702	24ANB642A**30	FB4CNF042+TXV		41,500	12.5	15.0
4610703	24ANB642A**30	FB4CNF048+TXV		41,500	13.0	15.0
4610705	24ANB642A**30	FB4CNF060		42,000	13.0	15.5
4610704	24ANB642A**30	FB4CNF060+TXV		42,000	13.0	15.5
4638146	24ANB642A**30	FE4AN(B,F)003+UI		40,000	13.0	15.5
4638147	24ANB642A**30	FE4AN(B,F)005+UI		41,500	13.0	16.0
4638148	24ANB642A**30	FE4ANB006+UI		42,000	13.0	16.0
4638149	24ANB642A**30	FE5ANB004+UI		42,000	13.0	16.0
4638150	24ANB642A**30	FV4CN(B,F)003		40,000	13.0	15.5
4638151	24ANB642A**30	FV4CN(B,F)005		41,500	13.0	16.0
4638152	24ANB642A**30	FV4CNB006		42,000	13.0	16.0
4610708	24ANB642A**30	FX4DN(B,F)043		41,500	12.5	15.0
4610709	24ANB642A**30	FX4DN(B,F)049		42,000	13.0	16.0
4610710	24ANB642A**30	FX4DN(B,F)061		42,000	13.5	16.0
4610706	24ANB642A**30	FY5BNF042+TXV		41,000	12.5	14.5
4610707	24ANB642A**30	FY5BNF048+TXV		42,000	12.5	14.5
4638153	24ANB643A**30	FE4AN(B,F)003+UI		41,000	13.0	16.0
4638154	24ANB643A**30	FE4AN(B,F)005+UI		42,000	13.5	16.5
4638155	24ANB643A**30	FE4ANB006+UI		42,000	14.0	17.0
4638156	24ANB643A**30	FE5ANB004+UI		42,000	14.0	17.0
4638157	24ANB643A**30	FV4CN(B,F)003		41,000	13.0	16.0
4638158	24ANB643A**30	FV4CN(B,F)005		42,000	14.0	16.5
4638159	24ANB643A**30	FV4CNB006		42,000	14.0	17.0
4611297	24ANB648A**30	†CNPV*6124A**+TDR		46,500	12.5	14.5
4611299	24ANB648A**30	CAP**4817A**	58CV(A,X)090–16	45,000	12.5	14.5
4611300	24ANB648A**30	CAP**4817A**	58MEC080–16	45,000	12.5	14.5
4611298	24ANB648A**30	CAP**4817A**+TDR		45,000	12.0	14.0
4611459	24ANB648A**30	CAP**4821A**	58CV(A,X)090–16	44,500	12.5	14.5
4611304	24ANB648A**30	CAP**4821A**	58CV(A,X)110–20	44,500	12.5	14.5
4611460	24ANB648A**30	CAP**4821A**	58MEC080–16	45,000	12.5	14.5
4611307	24ANB648A**30	CAP**4821A**	58MEC100–20	45,000	13.0	15.2
4611302	24ANB648A**30	CAP**4821A**	58MV(B,C)080–20	44,500	12.5	14.5
4611303	24ANB648A**30	CAP**4821A**	58MV(B,C)100–20	44,500	12.5	14.5
4611305	24ANB648A**30	CAP**4821A**	58PH*090–16	45,000	12.5	15.0
4611306	24ANB648A**30	CAP**4821A**	58PH*110–20	45,000	13.0	15.2
4644762	24ANB648A**30	CAP**4821A**	58UVB080–20	44,500	12.5	14.5
4644763	24ANB648A**30	CAP**4821A**	58UVB100–20	44,500	12.5	14.5
4611494	24ANB648A**30	CAP**4821A**	OVLAAB048112	44,500	12.0	14.0
4611301	24ANB648A**30	CAP**4821A**+TDR		45,000	12.0	14.0
4611330	24ANB648A**30	CAP**4823A**	58HDV080––20	45,000	12.5	14.5
4611329	24ANB648A**30	CAP**4823A**+TDR		45,000	12.0	14.0
4611463	24ANB648A**30	CAP**4824A**	58CV(A,X)110–20	44,500	12.5	15.0
4611310	24ANB648A**30	CAP**4824A**	58CV(A,X)135–22	45,000	13.0	15.2
4611311	24ANB648A**30	CAP**4824A**	58CV(A,X)155–22	45,000	13.0	15.2
4611467	24ANB648A**30	CAP**4824A**	58HDV080––20	45,000	12.5	14.5
4611314	24ANB648A**30	CAP**4824A**	58HDV100––20	45,000	12.5	14.5
4611466	24ANB648A**30	CAP**4824A**	58MEC100–20	45,000	13.0	15.2
4611313	24ANB648A**30	CAP**4824A**	58MEC120–20	45,000	13.0	15.2
4611461	24ANB648A**30	CAP**4824A**	58MV(B,C)080–20	44,500	12.5	14.5
4611462	24ANB648A**30	CAP**4824A**	58MV(B,C)100–20	44,500	12.5	14.5
4611309	24ANB648A**30	CAP**4824A**	58MV(B,C)120–20	44,500	12.5	15.0
4611464	24ANB648A**30	CAP**4824A**	58PH*090–16	45,000	12.5	15.0
4611465	24ANB648A**30	CAP**4824A**	58PH*110–20	45,000	13.0	15.2
4611312	24ANB648A**30	CAP**4824A**	58PH*135–20	45,000	13.0	15.2

See notes on page 35

COMBINATION RATINGS CONTINUED

AHRI Ref. Number	Model Number	Indoor Coil Model Number	Furnace Model Number	Cooling Capacity	EER	SEER
4644764	24ANB648A**30	CAP**4824A**	58UVB120−20	44,500	12.7	15.0
4611308	24ANB648A**30	CAP**4824A**+TDR		45,000	12.0	14.0
4611470	24ANB648A**30	CAP**6021A**	58CV(A,X)090−16	45,500	13.0	15.2
4611318	24ANB648A**30	CAP**6021A**	58CV(A,X)110−20	45,500	13.0	15.2
4611471	24ANB648A**30	CAP**6021A**	58MEC080−16	46,000	13.0	15.2
4611321	24ANB648A**30	CAP**6021A**	58MEC100−20	46,000	13.0	15.5
4611316	24ANB648A**30	CAP**6021A**	58MV(B,C)080−20	45,000	13.0	15.2
4611317	24ANB648A**30	CAP**6021A**	58MV(B,C)100−20	45,500	12.5	15.0
4611319	24ANB648A**30	CAP**6021A**	58PH*090−16	46,000	13.0	15.2
4611320	24ANB648A**30	CAP**6021A**	58PH*110−20	45,500	13.0	16.0
4644765	24ANB648A**30	CAP**6021A**	58UVB080−20	45,000	13.0	15.0
4644766	24ANB648A**30	CAP**6021A**	58UVB100−20	45,500	12.7	15.0
4611495	24ANB648A**30	CAP**6021A**	OVLAAB048112	45,500	12.5	14.5
4611315	24ANB648A**30	CAP**6021A**+TDR		46,000	12.5	14.0
4611474	24ANB648A**30	CAP**6024A**	58CV(A,X)110−20	45,500	13.0	15.2
4611324	24ANB648A**30	CAP**6024A**	58CV(A,X)135−22	45,500	13.0	15.5
4611325	24ANB648A**30	CAP**6024A**	58CV(A,X)155−22	46,000	13.0	16.0
4611478	24ANB648A**30	CAP**6024A**	58HDV080−−20	46,000	13.0	15.0
4611328	24ANB648A**30	CAP**6024A**	58HDV100−−20	45,500	13.0	15.2
4611477	24ANB648A**30	CAP**6024A**	58MEC100−20	46,000	13.0	15.5
4611327	24ANB648A**30	CAP**6024A**	58MEC120−20	46,000	13.0	16.0
4611472	24ANB648A**30	CAP**6024A**	58MV(B,C)080−20	45,000	13.0	15.2
4611473	24ANB648A**30	CAP**6024A**	58MV(B,C)100−20	45,500	13.0	15.2
4611323	24ANB648A**30	CAP**6024A**	58MV(B,C)120−20	45,500	13.0	15.2
4611475	24ANB648A**30	CAP**6024A**	58PH*090−16	46,000	13.0	15.2
4611476	24ANB648A**30	CAP**6024A**	58PH*110−20	46,000	13.0	16.0
4611326	24ANB648A**30	CAP**6024A**	58PH*135−20	46,000	13.0	15.5
4644767	24ANB648A**30	CAP**6024A**	58UVB120−20	45,500	13.2	15.2
4611322	24ANB648A**30	CAP**6024A**+TDR		46,000	12.5	14.0
4611486	24ANB648A**30	CAP**6025A**	58HDV080−−20	46,000	13.0	15.2
4611332	24ANB648A**30	CAP**6025A**	58HDV100−−20	45,500	13.0	15.2
4644768	24ANB648A**30	CAP**6025A**	58UVB120−20	45,500	13.2	15.2
4611331	24ANB648A**30	CAP**6025A**+TDR		46,000	12.5	14.0
4611364	24ANB648A**30	CNPH*4821A**	58CV(A,X)090−16	45,000	12.5	15.0
4611365	24ANB648A**30	CNPH*4821A**	58CV(A,X)110−20	45,000	13.0	15.2
4611366	24ANB648A**30	CNPH*4821A**	58CV(A,X)135−22	45,000	13.0	15.2
4611367	24ANB648A**30	CNPH*4821A**	58CV(A,X)155−22	45,000	13.0	15.5
4611374	24ANB648A**30	CNPH*4821A**	58HDV080−−20	45,000	12.5	14.5
4611375	24ANB648A**30	CNPH*4821A**	58HDV100−−20	45,000	12.5	14.5
4611371	24ANB648A**30	CNPH*4821A**	58MEC080−16	45,000	12.5	14.5
4611372	24ANB648A**30	CNPH*4821A**	58MEC100−20	45,000	13.0	15.2
4611373	24ANB648A**30	CNPH*4821A**	58MEC120−20	45,500	13.0	15.5
4611361	24ANB648A**30	CNPH*4821A**	58MV(B,C)080−20	44,500	12.5	14.5
4611362	24ANB648A**30	CNPH*4821A**	58MV(B,C)100−20	45,000	12.5	14.5
4611363	24ANB648A**30	CNPH*4821A**	58MV(B,C)120−20	45,000	13.0	15.0
4611368	24ANB648A**30	CNPH*4821A**	58PH*090−16	45,000	13.0	15.2
4611369	24ANB648A**30	CNPH*4821A**	58PH*110−20	45,000	13.0	15.2
4611370	24ANB648A**30	CNPH*4821A**	58PH*135−20	45,000	13.0	15.2
4611497	24ANB648A**30	CNPH*4821A**	OVLAAB048112	45,000	12.0	14.0
4611498	24ANB648A**30	CNPH*4821A**	OVLAAB060154	46,000	12.5	14.5
4611360	24ANB648A**30	CNPH*4821A**+TDR		45,500	12.0	14.0
4611380	24ANB648A**30	CNPH*6024A**	58CV(A,X)090−16	45,500	13.0	15.2
4611381	24ANB648A**30	CNPH*6024A**	58CV(A,X)110−20	45,500	13.0	15.5
4611382	24ANB648A**30	CNPH*6024A**	58CV(A,X)135−22	45,500	13.0	16.0
4611383	24ANB648A**30	CNPH*6024A**	58CV(A,X)155−22	46,000	13.0	16.0
4611390	24ANB648A**30	CNPH*6024A**	58HDV080−−20	46,000	13.0	15.0
4611391	24ANB648A**30	CNPH*6024A**	58HDV100−−20	46,000	13.0	15.2
4611387	24ANB648A**30	CNPH*6024A**	58MEC080−16	46,000	13.0	15.2
4611388	24ANB648A**30	CNPH*6024A**	58MEC100−20	46,000	13.0	15.5
4611389	24ANB648A**30	CNPH*6024A**	58MEC120−20	46,000	13.0	16.0
4611377	24ANB648A**30	CNPH*6024A**	58MV(B,C)080−20	45,000	13.0	15.2
4611378	24ANB648A**30	CNPH*6024A**	58MV(B,C)100−20	45,500	13.0	15.2
4611379	24ANB648A**30	CNPH*6024A**	58MV(B,C)120−20	45,500	13.0	15.2
4611384	24ANB648A**30	CNPH*6024A**	58PH*090−16	46,000	13.0	15.5
4611385	24ANB648A**30	CNPH*6024A**	58PH*110−20	46,000	13.0	16.0
4611386	24ANB648A**30	CNPH*6024A**	58PH*135−20	46,000	13.0	15.5
4611499	24ANB648A**30	CNPH*6024A**	OVLAAB048112	45,500	12.5	14.5
4611500	24ANB648A**30	CNPH*6024A**	OVLAAB060154	46,500	13.0	15.2
4611376	24ANB648A**30	CNPH*6024A**+TDR		46,000	12.5	14.0
4611396	24ANB648A**30	CNPH*6124A**	58CV(A,X)090−16	45,500	13.0	15.2
4611397	24ANB648A**30	CNPH*6124A**	58CV(A,X)110−20	45,500	13.0	15.5
4611398	24ANB648A**30	CNPH*6124A**	58CV(A,X)135−22	46,000	13.0	16.0
4611399	24ANB648A**30	CNPH*6124A**	58CV(A,X)155−22	46,000	13.0	16.0
4611406	24ANB648A**30	CNPH*6124A**	58HDV080−−20	46,000	13.0	15.2
4611407	24ANB648A**30	CNPH*6124A**	58HDV100−−20	46,000	13.0	15.2
4611403	24ANB648A**30	CNPH*6124A**	58MEC080−16	46,000	13.0	15.2
4611404	24ANB648A**30	CNPH*6124A**	58MEC100−20	46,000	13.0	16.0
4611405	24ANB648A**30	CNPH*6124A**	58MEC120−20	46,000	13.0	16.0
4611393	24ANB648A**30	CNPH*6124A**	58MV(B,C)080−20	45,500	13.0	15.2
4611394	24ANB648A**30	CNPH*6124A**	58MV(B,C)100−20	45,500	13.0	15.2

See notes on page 35

COMBINATION RATINGS CONTINUED

AHRI Ref. Number	Model Number	Indoor Coil Model Number	Furnace Model Number	Cooling Capacity	EER	SEER
4611395	24ANB648A**30	CNPH*6124A**	58MV(B,C)120−20	45,500	13.0	15.2
4611400	24ANB648A**30	CNPH*6124A**	58PH*090−16	46,000	13.0	15.5
4611401	24ANB648A**30	CNPH*6124A**	58PH*110−20	46,000	13.0	16.0
4611402	24ANB648A**30	CNPH*6124A**	58PH*135−20	46,000	13.0	15.5
4611501	24ANB648A**30	CNPH*6124A**	OVLAAB048112	45,500	12.5	14.5
4611502	24ANB648A**30	CNPH*6124A**	OVLAAB060154	46,500	13.0	15.2
4611392	24ANB648A**30	CNPH*6124A**+TDR		46,500	12.5	14.5
4611468	24ANB648A**30	CNPV*4821A**	58CV(A,X)090−16	45,000	12.5	15.0
4611336	24ANB648A**30	CNPV*4821A**	58CV(A,X)110−20	45,000	13.0	15.2
4611507	24ANB648A**30	CNPV*4821A**	58HDV080−−20	45,000	12.5	14.5
4611469	24ANB648A**30	CNPV*4821A**	58MEC080−16	45,000	12.5	14.5
4611339	24ANB648A**30	CNPV*4821A**	58MEC100−20	45,000	13.0	15.2
4611334	24ANB648A**30	CNPV*4821A**	58MV(B,C)080−20	44,500	12.5	14.5
4611335	24ANB648A**30	CNPV*4821A**	58MV(B,C)100−20	45,000	12.5	14.5
4611337	24ANB648A**30	CNPV*4821A**	58PH*090−16	45,000	13.0	15.2
4611338	24ANB648A**30	CNPV*4821A**	58PH*110−20	45,000	13.0	15.2
4644769	24ANB648A**30	CNPV*4821A**	58UVB080−20	44,500	12.7	14.5
4644770	24ANB648A**30	CNPV*4821A**	58UVB100−20	45,000	12.7	14.5
4611496	24ANB648A**30	CNPV*4821A**	OVLAAB048112	45,000	12.0	14.0
4611333	24ANB648A**30	CNPV*4821A**+TDR		45,500	12.0	14.0
4611481	24ANB648A**30	CNPV*4824A**	58CV(A,X)110−20	45,000	13.0	15.2
4611342	24ANB648A**30	CNPV*4824A**	58CV(A,X)135−22	45,000	13.0	15.2
4611343	24ANB648A**30	CNPV*4824A**	58CV(A,X)155−22	45,000	13.0	15.5
4611485	24ANB648A**30	CNPV*4824A**	58HDV080−−20	45,000	12.5	14.5
4611346	24ANB648A**30	CNPV*4824A**	58HDV100−−20	45,000	12.5	14.5
4611484	24ANB648A**30	CNPV*4824A**	58MEC100−20	45,000	13.0	15.2
4611345	24ANB648A**30	CNPV*4824A**	58MEC120−20	45,500	13.0	15.2
4611479	24ANB648A**30	CNPV*4824A**	58MV(B,C)080−20	44,500	12.5	14.5
4611480	24ANB648A**30	CNPV*4824A**	58MV(B,C)100−20	45,000	12.5	14.5
4611341	24ANB648A**30	CNPV*4824A**	58MV(B,C)120−20	45,000	13.0	15.0
4611482	24ANB648A**30	CNPV*4824A**	58PH*090−16	45,000	13.0	15.2
4611483	24ANB648A**30	CNPV*4824A**	58PH*110−20	45,000	13.0	15.2
4611344	24ANB648A**30	CNPV*4824A**	58PH*135−20	45,000	13.0	15.2
4644771	24ANB648A**30	CNPV*4824A**	58UVB120−20	45,000	13.0	15.0
4611340	24ANB648A**30	CNPV*4824A**+TDR		45,500	12.0	14.0
4611489	24ANB648A**30	CNPV*6024A**	58CV(A,X)110−20	45,500	13.0	15.5
4611349	24ANB648A**30	CNPV*6024A**	58CV(A,X)135−22	45,500	13.0	16.0
4611350	24ANB648A**30	CNPV*6024A**	58CV(A,X)155−22	46,000	13.0	16.0
4611493	24ANB648A**30	CNPV*6024A**	58HDV080−−20	46,000	13.0	15.0
4611353	24ANB648A**30	CNPV*6024A**	58HDV100−−20	46,000	13.0	15.2
4611492	24ANB648A**30	CNPV*6024A**	58MEC100−20	46,000	13.0	15.5
4611352	24ANB648A**30	CNPV*6024A**	58MEC120−20	46,000	13.0	16.0
4611487	24ANB648A**30	CNPV*6024A**	58MV(B,C)080−20	45,000	13.0	15.2
4611488	24ANB648A**30	CNPV*6024A**	58MV(B,C)100−20	45,500	13.0	15.0
4611348	24ANB648A**30	CNPV*6024A**	58MV(B,C)120−20	45,500	13.0	15.2
4611490	24ANB648A**30	CNPV*6024A**	58PH*090−16	46,000	13.0	15.2
4611491	24ANB648A**30	CNPV*6024A**	58PH*110−20	46,000	13.5	16.0
4611351	24ANB648A**30	CNPV*6024A**	58PH*135−20	46,000	13.0	15.5
4644772	24ANB648A**30	CNPV*6024A**	58UVB120−20	45,500	13.2	15.5
4611347	24ANB648A**30	CNPV*6024A**+TDR		46,000	12.5	14.0
4611454	24ANB648A**30	CNPV*6124A**	58CV(A,X)110−20	46,000	13.5	16.0
4611355	24ANB648A**30	CNPV*6124A**	58CV(A,X)135−22	46,000	13.0	16.0
4611356	24ANB648A**30	CNPV*6124A**	58CV(A,X)155−22	46,500	13.0	16.0
4611458	24ANB648A**30	CNPV*6124A**	58HDV080−−20	46,500	13.0	15.2
4611359	24ANB648A**30	CNPV*6124A**	58HDV100−−20	46,500	13.0	15.5
4611457	24ANB648A**30	CNPV*6124A**	58MEC100−20	46,500	13.5	16.0
4611358	24ANB648A**30	CNPV*6124A**	58MEC120−20	46,500	13.0	16.0
4611452	24ANB648A**30	CNPV*6124A**	58MV(B,C)080−20	46,000	13.0	15.5
4611453	24ANB648A**30	CNPV*6124A**	58MV(B,C)100−20	46,000	13.0	15.2
4611354	24ANB648A**30	CNPV*6124A**	58MV(B,C)120−20	46,000	13.0	16.0
4611455	24ANB648A**30	CNPV*6124A**	58PH*090−16	46,500	13.0	16.0
4611456	24ANB648A**30	CNPV*6124A**	58PH*110−20	46,500	13.5	16.0
4611357	24ANB648A**30	CNPV*6124A**	58PH*135−20	46,500	13.0	16.0
4644773	24ANB648A**30	CNPV*6124A**	58UVB120−20	46,000	13.2	15.5
4611412	24ANB648A**30	CSPH*4812A**	58CV(A,X)090−16	45,000	13.0	15.0
4611413	24ANB648A**30	CSPH*4812A**	58CV(A,X)110−20	45,000	13.0	15.2
4611414	24ANB648A**30	CSPH*4812A**	58CV(A,X)135−22	45,500	13.0	15.2
4611415	24ANB648A**30	CSPH*4812A**	58CV(A,X)155−22	45,500	13.0	15.5
4611422	24ANB648A**30	CSPH*4812A**	58HDV080−−20	45,500	12.5	14.5
4611423	24ANB648A**30	CSPH*4812A**	58HDV100−−20	45,500	12.5	14.5
4611419	24ANB648A**30	CSPH*4812A**	58MEC080−16	45,500	12.5	14.5
4611420	24ANB648A**30	CSPH*4812A**	58MEC100−20	45,500	13.0	15.2
4611421	24ANB648A**30	CSPH*4812A**	58MEC120−20	45,500	13.0	15.5
4611409	24ANB648A**30	CSPH*4812A**	58MV(B,C)080−20	45,000	12.5	14.5
4611410	24ANB648A**30	CSPH*4812A**	58MV(B,C)100−20	45,000	12.5	14.5
4611411	24ANB648A**30	CSPH*4812A**	58MV(B,C)120−20	45,000	13.0	15.2
4611416	24ANB648A**30	CSPH*4812A**	58PH*090−16	45,500	13.0	15.2
4611417	24ANB648A**30	CSPH*4812A**	58PH*110−20	45,500	13.0	15.5
4611418	24ANB648A**30	CSPH*4812A**	58PH*135−20	45,500	13.0	15.2
4611503	24ANB648A**30	CSPH*4812A**	OVLAAB048112	45,000	12.0	14.0

See notes on page 35

COMBINATION RATINGS CONTINUED

AHRI Ref. Number	Model Number	Indoor Coil Model Number	Furnace Model Number	Cooling Capacity	EER	SEER
4611504	24ANB648A**30	CSPH*4812A**	OVLAAB060154	46,000	12.5	14.5
4611408	24ANB648A**30	CSPH*4812A**+TDR		46,000	12.0	14.0
4611428	24ANB648A**30	CSPH*6012A**	58CV(A,X)090−16	45,500	13.0	15.5
4611429	24ANB648A**30	CSPH*6012A**	58CV(A,X)110−20	46,000	13.0	15.5
4611430	24ANB648A**30	CSPH*6012A**	58CV(A,X)135−22	46,000	13.0	16.0
4611431	24ANB648A**30	CSPH*6012A**	58CV(A,X)155−22	46,000	13.0	16.0
4611438	24ANB648A**30	CSPH*6012A**	58HDV080−−20	46,000	13.0	15.2
4611439	24ANB648A**30	CSPH*6012A**	58HDV100−−20	46,000	13.0	15.2
4611435	24ANB648A**30	CSPH*6012A**	58MEC080−16	46,000	13.0	15.2
4611436	24ANB648A**30	CSPH*6012A**	58MEC100−20	46,000	13.0	16.0
4611437	24ANB648A**30	CSPH*6012A**	58MEC120−20	46,500	13.0	16.0
4611425	24ANB648A**30	CSPH*6012A**	58MV(B,C)080−20	45,500	13.0	15.2
4611426	24ANB648A**30	CSPH*6012A**	58MV(B,C)100−20	46,000	13.0	15.2
4611427	24ANB648A**30	CSPH*6012A**	58MV(B,C)120−20	46,000	13.0	15.5
4611432	24ANB648A**30	CSPH*6012A**	58PH*090−16	46,000	13.0	15.5
4611433	24ANB648A**30	CSPH*6012A**	58PH*110−20	46,000	13.0	16.0
4611434	24ANB648A**30	CSPH*6012A**	58PH*135−20	46,000	13.0	16.0
4611505	24ANB648A**30	CSPH*6012A**	OVLAAB048112	46,000	12.5	14.5
4611506	24ANB648A**30	CSPH*6012A**	OVLAAB060154	47,000	13.0	15.5
4611424	24ANB648A**30	CSPH*6012A**+TDR		46,500	12.5	14.5
4611440	24ANB648A**30	FB4CNF048+TXV		45,000	12.5	14.5
4611441	24ANB648A**30	FB4CNF060		46,000	13.0	15.0
4638160	24ANB648A**30	FE4AN(B,F)005+UI		46,000	13.5	16.0
4638161	24ANB648A**30	FE4ANB006+UI		46,500	13.5	16.0
4638162	24ANB648A**30	FV4CN(B,F)005		46,000	13.5	16.0
4638163	24ANB648A**30	FV4CNB006		46,500	13.5	16.0
4611444	24ANB648A**30	FX4DN(B,F)049		46,500	13.0	16.0
4611445	24ANB648A**30	FX4DN(B,F)061		47,000	13.5	16.0
4611443	24ANB648A**30	FY5BNB060		46,000	12.0	14.0
4611442	24ANB648A**30	FY5BNF048+TXV		46,000	12.5	14.5
4611508	24ANB660A**30	†CNPV*6124A**+TDR		55,000	12.5	14.5
4611510	24ANB660A**30	CAP**6021A**	58CV(A,X)110−20	53,500	12.5	15.0
4611512	24ANB660A**30	CAP**6021A**	58MEC100−20	53,500	13.0	15.2
4611511	24ANB660A**30	CAP**6021A**	58PH*110−20	53,500	13.0	15.5
4644774	24ANB660A**30	CAP**6021A**	58UVB080−20	53,000	12.0	14.0
4644775	24ANB660A**30	CAP**6021A**	58UVB100−20	53,000	12.2	14.5
4611509	24ANB660A**30	CAP**6021A**+TDR		53,500	12.5	14.5
4611562	24ANB660A**30	CAP**6024A**	58CV(A,X)110−20	53,500	13.0	15.0
4611514	24ANB660A**30	CAP**6024A**	58CV(A,X)135−22	53,500	13.0	15.5
4611515	24ANB660A**30	CAP**6024A**	58CV(A,X)155−22	54,000	13.0	15.5
4611564	24ANB660A**30	CAP**6024A**	58MEC100−20	53,500	13.0	15.2
4611517	24ANB660A**30	CAP**6024A**	58MEC120−20	53,500	13.0	15.5
4611563	24ANB660A**30	CAP**6024A**	58PH*110−20	53,500	13.0	15.5
4611516	24ANB660A**30	CAP**6024A**	58PH*135−20	53,500	13.0	15.2
4644776	24ANB660A**30	CAP**6024A**	58UVB120−20	53,500	12.7	14.5
4612549	24ANB660A**30	CAP**6024A**	OVLAAB060154	54,000	11.7	13.7
4611513	24ANB660A**30	CAP**6024A**+TDR		54,500	12.5	14.5
4644777	24ANB660A**30	CAP**6025A**	58UVB120−20	53,500	12.7	14.5
4612550	24ANB660A**30	CAP**6025A**	OVLAAB060154	54,000	11.7	13.7
4611518	24ANB660A**30	CAP**6025A**+TDR		54,500	12.5	14.5
4611530	24ANB660A**30	CNPH*6024A**	58CV(A,X)110−20	53,500	13.0	15.2
4611531	24ANB660A**30	CNPH*6024A**	58CV(A,X)135−22	53,500	13.0	15.5
4611532	24ANB660A**30	CNPH*6024A**	58CV(A,X)155−22	54,000	13.0	15.5
4611574	24ANB660A**30	CNPH*6024A**	58HDV080−−20	53,500	12.0	14.0
4611575	24ANB660A**30	CNPH*6024A**	58HDV100−−20	53,500	12.5	14.5
4611535	24ANB660A**30	CNPH*6024A**	58MEC080−16	53,000	12.5	15.0
4611536	24ANB660A**30	CNPH*6024A**	58MEC100−20	53,500	13.0	15.2
4611537	24ANB660A**30	CNPH*6024A**	58MEC120−20	53,500	13.0	15.5
4611533	24ANB660A**30	CNPH*6024A**	58PH*110−20	54,000	13.0	15.5
4611534	24ANB660A**30	CNPH*6024A**	58PH*135−20	53,500	13.0	15.2
4612546	24ANB660A**30	CNPH*6024A**	OVLAAB060154	54,000	11.7	13.7
4611529	24ANB660A**30	CNPH*6024A**+TDR		54,500	12.5	14.5
4611539	24ANB660A**30	CNPH*6124A**	58CV(A,X)110−20	54,000	13.0	15.0
4611540	24ANB660A**30	CNPH*6124A**	58CV(A,X)135−22	54,000	13.0	15.5
4611541	24ANB660A**30	CNPH*6124A**	58CV(A,X)155−22	54,000	13.0	15.5
4611576	24ANB660A**30	CNPH*6124A**	58HDV080−−20	54,000	12.0	14.0
4611577	24ANB660A**30	CNPH*6124A**	58HDV100−−20	54,000	12.5	14.5
4611544	24ANB660A**30	CNPH*6124A**	58MEC100−20	53,500	13.0	15.2
4611545	24ANB660A**30	CNPH*6124A**	58MEC120−20	54,000	13.0	15.5
4611542	24ANB660A**30	CNPH*6124A**	58PH*110−20	54,000	13.0	15.5
4611543	24ANB660A**30	CNPH*6124A**	58PH*135−20	53,500	13.0	15.2
4612547	24ANB660A**30	CNPH*6124A**	OVLAAB060154	54,000	11.7	13.7
4611538	24ANB660A**30	CNPH*6124A**+TDR		54,000	12.5	14.5
4611568	24ANB660A**30	CNPV*6024A**	58CV(A,X)110−20	53,500	12.5	15.2
4611520	24ANB660A**30	CNPV*6024A**	58CV(A,X)135−22	53,500	13.0	15.5
4611521	24ANB660A**30	CNPV*6024A**	58CV(A,X)155−22	54,000	13.0	15.5
4611570	24ANB660A**30	CNPV*6024A**	58HDV080−−20	53,500	12.0	14.0
4611571	24ANB660A**30	CNPV*6024A**	58HDV100−−20	53,500	12.5	14.5
4611523	24ANB660A**30	CNPV*6024A**	58MEC120−20	53,500	13.0	15.5

See notes on page 35

COMBINATION RATINGS CONTINUED

AHRI Ref. Number	Model Number	Indoor Coil Model Number	Furnace Model Number	Cooling Capacity	EER	SEER
4611569	24ANB660A**30	CNPV*6024A**	58PH*110−20	54,000	13.0	15.5
4611522	24ANB660A**30	CNPV*6024A**	58PH*135−20	53,500	13.0	15.2
4644778	24ANB660A**30	CNPV*6024A**	58UVB120−20	53,500	12.7	15.0
4612551	24ANB660A**30	CNPV*6024A**	OVLAAB060154	54,000	11.7	13.7
4611519	24ANB660A**30	CNPV*6024A**+TDR		54,500	12.5	14.5
4611565	24ANB660A**30	CNPV*6124A**	58CV(A,X)110−20	54,500	13.0	15.2
4611525	24ANB660A**30	CNPV*6124A**	58CV(A,X)135−22	54,500	13.0	16.0
4611526	24ANB660A**30	CNPV*6124A**	58CV(A,X)155−22	54,500	13.0	16.0
4611572	24ANB660A**30	CNPV*6124A**	58HDV080−−20	54,500	12.5	14.5
4611573	24ANB660A**30	CNPV*6124A**	58HDV100−−20	54,500	12.5	14.5
4611567	24ANB660A**30	CNPV*6124A**	58MEC100−20	54,000	13.0	15.5
4611528	24ANB660A**30	CNPV*6124A**	58MEC120−20	54,500	13.0	16.0
4611524	24ANB660A**30	CNPV*6124A**	58MV(B,C)120−20	54,000	13.0	15.2
4611566	24ANB660A**30	CNPV*6124A**	58PH*110−20	54,500	13.0	15.5
4611527	24ANB660A**30	CNPV*6124A**	58PH*135−20	54,500	13.0	15.5
4644779	24ANB660A**30	CNPV*6124A**	58UVB120−20	54,000	12.7	15.0
4612552	24ANB660A**30	CNPV*6124A**	OVLAAB060154	55,000	12.0	14.0
4611548	24ANB660A**30	CSPH*6012A**	58CV(A,X)110−20	54,000	13.0	15.2
4611549	24ANB660A**30	CSPH*6012A**	58CV(A,X)135−22	54,000	13.0	15.5
4611550	24ANB660A**30	CSPH*6012A**	58CV(A,X)155−22	54,000	13.0	16.0
4611553	24ANB660A**30	CSPH*6012A**	58MEC080−16	53,500	13.0	15.2
4611554	24ANB660A**30	CSPH*6012A**	58MEC100−20	54,000	13.0	15.5
4611555	24ANB660A**30	CSPH*6012A**	58MEC120−20	54,000	13.0	16.0
4611547	24ANB660A**30	CSPH*6012A**	58MV(B,C)120−20	53,500	13.0	15.0
4611551	24ANB660A**30	CSPH*6012A**	58PH*110−20	54,000	13.0	15.5
4611552	24ANB660A**30	CSPH*6012A**	58PH*135−20	54,000	13.0	15.5
4612548	24ANB660A**30	CSPH*6012A**	OVLAAB060154	54,500	12.0	14.0
4611546	24ANB660A**30	CSPH*6012A**+TDR		54,500	12.5	14.5
4611556	24ANB660A**30	FB4CNF060		54,000	12.5	14.5
4638164	24ANB660A**30	FE4ANB006+UI		54,500	13.5	16.0
4638165	24ANB660A**30	FV4CNB006		54,500	13.5	16.0
4611558	24ANB660A**30	FX4DN(B,F)061		55,000	13.0	15.5
4611557	24ANB660A**30	FY5BNB060		54,000	12.0	13.5

EER — Energy Efficiency Ratio
SEER — Seasonal Energy Efficiency Ratio
TDR — Time−Delay Relay. In most cases, only 1 method should be used to achieve TDR function. Using more than 1 method in a system may cause degradation in performance. Use either the accessory Time−Delay Relay KAATD0101TDR or a furnace equipped with TDR. Most Carrier furnaces are equipped with TDR.
UI — User Interface

NOTES:
1. Ratings are net values reflecting the effects of circulating fan motor heat. Supplemental electric heat is not included.
2. Tested outdoor/indoor combinations have been tested in accordance with DOE test procedures for central air conditioners. Ratings for other combinations are determined under DOE computer simulation procedures.
3. Determine actual CFM values obtainable for your system by referring to fan performance data in fan coil or furnace coil literature.
4. Do not apply with capillary tube coils as performance and reliability are affected.

NOTE: **Ratings contained in this document are subject to change at any time. Always refer to the AHRI directory (www.ahridirectory.org) for the most up−to−date ratings information**

DETAILED COOLING CAPACITIES#

EVAPORATOR AIR		CONDENSER ENTERING AIR TEMPERATURES °F (°C)																	
		75 (23.9)			85 (29.4)			95 (35)			105 (40.6)			115 (46.1)			125 (51.7)		
CFM	EWB °F (°C)	Capacity MBtuh		Total Sys. KW**	Capacity MBtuh		Total Sys. KW**	Capacity MBtuh		Total Sys. KW**	Capacity MBtuh		Total Sys. KW**	Capacity MBtuh		Total Sys. KW**	Capacity MBtuh		Total Sys. KW**
		Total	Sens‡		Total	Sens‡		Total	Sens‡		Total	Sens‡		Total	Sens‡		Total	Sens‡	
24ANB618A**30 Outdoor Section With CNPV*1917A** +TDR Indoor Section																			
525	72 (22.2)	21.63	10.95	1.12	20.61	10.57	1.26	19.54	10.18	1.41	18.41	9.76	1.58	17.21	9.34	1.77	15.94	8.89	1.97
	67 (19.4)	19.55	13.28	1.12	18.63	12.90	1.26	17.65	12.51	1.41	16.62	12.09	1.57	15.53	11.66	1.75	14.37	11.21	1.96
	63 (17.2)††	18.05	12.76	1.12	17.20	12.38	1.26	16.30	11.98	1.40	15.33	11.57	1.56	14.31	11.14	1.75	13.23	10.68	1.96
	62 (16.7)	17.71	15.58	1.12	16.88	15.21	1.25	16.01	14.81	1.40	15.10	14.39	1.56	14.22	14.22	1.75	13.36	13.36	1.96
	57 (13.9)	17.06	17.06	1.12	16.42	16.42	1.25	15.73	15.73	1.40	14.99	14.99	1.56	14.20	14.20	1.75	13.33	13.33	1.96
600	72 (22.2)	22.11	11.53	1.14	21.03	11.14	1.29	19.90	10.74	1.44	18.72	10.32	1.61	17.48	9.88	1.79	16.16	9.43	2.00
	67 (19.4)	19.99	14.19	1.14	19.02	13.81	1.28	18.00	13.40	1.43	16.92	12.98	1.60	15.79	12.54	1.78	14.58	12.08	1.99
	63 (17.2)††	18.48	13.61	1.14	17.58	13.22	1.28	16.63	12.82	1.43	15.63	12.39	1.59	14.56	11.95	1.78	13.44	11.49	1.98
	62 (16.7)	18.18	16.82	1.14	17.33	16.42	1.28	16.46	16.46	1.43	15.67	15.67	1.59	14.81	14.81	1.78	13.88	13.88	1.99
	57 (13.9)	17.88	17.88	1.14	17.18	17.18	1.28	16.44	16.44	1.43	15.64	15.64	1.59	14.79	14.79	1.78	13.86	13.86	1.99
675	72 (22.2)	22.46	12.08	1.17	21.34	11.68	1.32	20.17	11.27	1.47	18.95	10.85	1.64	17.66	10.41	1.82	16.31	9.95	2.03
	67 (19.4)	20.34	15.07	1.17	19.32	14.67	1.31	18.26	14.26	1.46	17.15	13.83	1.63	15.98	13.38	1.81	14.75	12.91	2.02
	63 (17.2)††	18.80	14.42	1.17	17.86	14.03	1.31	16.88	13.62	1.46	15.84	13.18	1.62	14.75	12.73	1.80	13.60	12.25	2.01
	62 (16.7)	18.61	18.52	1.17	17.85	17.85	1.31	17.05	17.05	1.46	16.21	16.21	1.62	15.30	15.30	1.80	14.32	14.32	2.01
	57 (13.9)	18.57	18.57	1.17	17.82	17.82	1.31	17.03	17.03	1.46	16.18	16.18	1.62	15.27	15.27	1.80	14.30	14.30	2.01

COOLING INDOOR MODEL	CAPACITY	POWER	FURNACE MODEL
*CNPV*1917A**	1.00	1.00	
CAP**1814A**	1.00	1.04	
CAP**2414A**	1.00	1.00	
CAP**2417A**	1.00	1.00	
CAP**3621A**	1.00	1.00	
CNPH*2417A**	1.00	1.00	
CNPV*1814A**	1.00	1.00	
CNPV*2414A**	1.00	1.00	
CNPV*2417A**	1.00	1.00	
CNPV*3621A**	1.00	1.00	
CSPH*2412A**	1.00	1.00	
FB4CNF018	1.00	0.92	
FB4CNF024	1.00	0.92	
FB4CNF030	1.00	0.96	
FE4ANF002	1.00	0.89	
FF1ENP018	1.00	1.04	
FF1ENP019	1.00	0.92	
FF1ENP024	1.00	1.00	
FF1ENP025	1.00	0.89	
FF1ENP031	1.00	0.92	
FF1ENP037	1.00	0.92	
FV4CNF002	1.00	0.89	
FX4DN(B,F)031	1.00	0.92	
FX4DNF019	1.00	0.89	
FX4DNF025	1.00	0.89	
FY5BNF018	1.00	0.96	
FY5BNF024	1.00	0.96	
CAP**1814A**	0.99	0.91	58CV(A,X)070–12
CAP**2414A**	1.00	0.92	58CV(A,X)070–12
CAP**2417A**	1.00	0.92	58CV(A,X)070–12
CNPH*2417A**	1.00	0.92	58CV(A,X)070–12
CNPV*1814A**	1.00	0.92	58CV(A,X)070–12
CNPV*1917A**	1.00	0.92	58CV(A,X)070–12
CNPV*2414A**	1.00	0.92	58CV(A,X)070–12

COOLING INDOOR MODEL	CAPACITY	POWER	FURNACE MODEL
CNPV*2417A**	1.00	0.92	58CV(A,X)070–12
CSPH*2412A**	1.00	0.92	58CV(A,X)070–12
CAP**2417A**	1.00	0.92	58CV(A,X)090–16
CNPH*2417A**	1.00	0.92	58CV(A,X)090–16
CNPV*1917A**	1.00	0.89	58CV(A,X)090–16
CNPV*2417A**	1.00	0.92	58CV(A,X)090–16
CSPH*2412A**	1.00	0.92	58CV(A,X)090–16
CNPH*2417A**	1.00	0.92	58HDV040––12
CNPV*1917A**	1.03	0.95	58HDV040––12
CNPV*2417A**	1.00	0.92	58HDV040––12
CSPH*2412A**	1.00	0.92	58HDV040––12
CNPH*2417A**	1.00	0.92	58HDV060––12
CNPV*1917A**	1.03	0.95	58HDV060––12
CNPV*2417A**	1.00	0.92	58HDV060––12
CSPH*2412A**	1.00	0.92	58HDV060––12
CAP**2417A**	1.00	0.89	58MEB040–12
CNPH*2417A**	1.00	0.89	58MEB040–12
CNPV*1917A**	1.00	0.89	58MEB040–12
CNPV*2417A**	1.00	0.89	58MEB040–12
CSPH*2412A**	1.00	0.89	58MEB040–12
CAP**2417A**	1.00	0.89	58MEC060–12
CNPH*2417A**	1.00	0.89	58MEC060–12
CNPV*1917A**	1.00	0.89	58MEC060–12
CNPV*2417A**	1.00	0.89	58MEC060–12
CSPH*2412A**	1.00	0.89	58MEC060–12
CAP**2417A**	1.00	0.92	58MV(B,C)060–14
CNPH*2417A**	1.00	0.92	58MV(B,C)060–14
CNPV*1917A**	1.00	0.89	58MV(B,C)060–14
CNPV*2417A**	1.00	0.92	58MV(B,C)060–14
CSPH*2412A**	1.00	0.92	58MV(B,C)060–14
CAP**3621A**	1.00	0.92	58MV(B,C)080–14
CNPH*2417A**	1.00	0.92	58MV(B,C)080–14
CNPV*3621A**	1.00	0.92	58MV(B,C)080–14
CSPH*2412A**	1.00	0.92	58MV(B,C)080–14

COOLING INDOOR MODEL	CAPACITY	POWER	FURNACE MODEL
CNPH*2417A**	1.00	0.92	58MVB040–14
CSPH*2412A**	1.00	0.92	58MVB040–14
CAP**1814A**	1.00	0.92	58PH*045–08
CAP**2414A**	1.00	0.92	58PH*045–08
CAP**2417A**	1.00	0.92	58PH*045–08
CNPH*2417A**	1.00	0.92	58PH*045–08
CNPV*1814A**	1.00	0.92	58PH*045–08
CNPV*1917A**	1.00	0.89	58PH*045–08
CNPV*2414A**	1.00	0.92	58PH*045–08
CNPV*2417A**	1.00	0.92	58PH*045–08
CSPH*2412A**	1.00	0.92	58PH*045–08
CAP**2417A**	1.00	0.92	OVLAAB036098
CNPH*2417A**	1.00	0.92	OVLAAB036098
CNPV*1917A**	1.00	0.92	OVLAAB036098
CNPV*2417A**	1.00	0.92	OVLAAB036098
CSPH*2412A**	1.00	0.92	OVLAAB036098
CAP**2417A**	1.00	0.92	OVMAAB036098
CNPH*2417A**	1.00	0.92	OVMAAB036098
CNPV*1917A**	1.00	0.92	OVMAAB036098
CNPV*2417A**	1.00	0.92	OVMAAB036098
CSPH*2412A**	1.00	0.92	OVMAAB036098

See notes on pg. 51

DETAILED COOLING CAPACITIES# CONTINUED

EVAPORATOR AIR		CONDENSER ENTERING AIR TEMPERATURES °F (°C)																	
		75 (23.9)			85 (29.4)			95 (35)			105 (40.6)			115 (46.1)			125 (51.7)		
CFM	EWB °F (°C)	Capacity MBtuh		Total Sys. KW**	Capacity MBtuh		Total Sys. KW**	Capacity MBtuh		Total Sys. KW**	Capacity MBtuh		Total Sys. KW**	Capacity MBtuh		Total Sys. KW**	Capacity MBtuh		Total Sys. KW**
		Total	Sens‡		Total	Sens‡		Total	Sens‡		Total	Sens‡		Total	Sens‡		Total	Sens‡	
24ANB624A**30 Outdoor Section With CNPV*3117A**+TDR Indoor Section																			
700	72 (22.2)	28.62	14.37	1.54	27.23	13.51	1.73	25.76	12.66	1.94	24.22	11.82	2.16	22.61	10.99	2.41	20.92	10.17	2.69
	67 (19.4)	26.01	17.59	1.54	24.72	16.64	1.73	23.39	15.71	1.93	21.99	14.77	2.15	20.51	13.85	2.40	18.97	12.93	2.68
	63 (17.2)††	24.07	16.91	1.55	22.89	15.98	1.73	21.64	15.06	1.92	20.33	14.14	2.14	18.96	13.23	2.39	17.51	12.32	2.67
	62 (16.7)	23.66	20.76	1.55	22.51	19.72	1.73	21.32	18.69	1.92	20.11	20.07	2.14	18.99	18.99	2.39	17.81	17.81	2.67
	57 (13.9)	23.01	23.01	1.55	22.09	22.09	1.73	21.11	21.11	1.92	20.07	20.07	2.14	18.96	18.96	2.39	17.78	17.78	2.67
800	72 (22.2)	29.14	15.12	1.58	27.70	14.25	1.77	26.17	13.37	1.98	24.57	12.50	2.20	22.90	11.64	2.45	21.16	10.79	2.73
	67 (19.4)	26.54	18.82	1.58	25.20	17.83	1.77	23.80	16.84	1.97	22.34	15.87	2.19	20.81	14.90	2.43	19.21	13.94	2.72
	63 (17.2)††	24.59	18.05	1.58	23.34	17.08	1.76	22.05	16.12	1.96	20.69	15.16	2.18	19.26	14.21	2.43	17.77	13.26	2.71
	62 (16.7)	24.26	22.42	1.58	23.11	23.01	1.76	22.04	22.04	1.96	20.92	20.92	2.18	19.73	19.73	2.43	18.47	18.47	2.71
	57 (13.9)	24.05	24.05	1.58	23.05	23.05	1.76	22.00	22.00	1.96	20.89	20.89	2.18	19.71	19.71	2.43	18.45	18.45	2.71
900	72 (22.2)	29.51	15.85	1.62	28.04	14.95	1.81	26.46	14.05	2.02	24.81	13.15	2.24	23.10	12.27	2.49	21.31	11.39	2.77
	67 (19.4)	26.93	20.00	1.62	25.54	18.97	1.80	24.10	17.94	2.01	22.60	16.92	2.23	21.03	15.91	2.47	19.40	14.90	2.75
	63 (17.2)††	24.97	19.15	1.62	23.69	18.14	1.80	22.35	17.14	2.00	20.95	16.14	2.22	19.49	15.15	2.47	17.97	14.15	2.75
	62 (16.7)	24.96	24.96	1.62	23.89	23.89	1.80	22.77	22.77	2.00	21.59	21.59	2.22	20.34	20.34	2.47	19.00	19.00	2.75
	57 (13.9)	24.92	24.92	1.62	23.86	23.86	1.80	22.74	22.74	2.00	21.56	21.56	2.22	20.31	20.31	2.47	18.98	18.98	2.75

COOLING INDOOR MODEL	CAPACITY	POWER	FURNACE MODEL
*CNPV*3117A**	1.00	1.00	
CAP**2414A**	0.97	1.02	
CAP**2417A**	0.97	1.02	
CAP**3014A**	0.98	1.03	
CAP**3017A**	0.98	1.03	
CAP**3614A**	0.98	1.03	
CAP**3617A**	0.98	1.03	
CAP**3619A**	0.98	1.03	
CAP**3621A**	0.98	1.03	
CNPF*2418A**	0.97	1.02	
CNPF*3618A**	0.98	1.03	
CNPH*2417A**	0.97	1.02	
CNPH*3017A**	0.98	1.03	
CNPH*3117A**	1.00	1.00	
CNPH*3617A**	0.98	1.03	
CNPV*1917A**	0.98	1.03	
CNPV*2414A**	0.97	1.02	
CNPV*2417A**	0.97	1.02	
CNPV*3014A**	0.98	1.03	
CNPV*3017A**	0.98	1.03	
CNPV*3617A**	0.98	1.03	
CNPV*3621A**	0.98	1.03	
CSPH*2412A**	0.98	1.03	
CSPH*3012A**	0.98	1.03	
CSPH*3612A**	1.00	1.00	
FB4CNF024	0.97	0.97	
FB4CNF030	0.99	0.92	
FB4CNF036	0.97	1.04	
FE4AN(B,F)003	0.98	0.91	
FE4ANF002	0.98	0.91	
FE5ANB004	1.02	0.90	
FF1ENP024	0.97	1.01	
FF1ENP025	0.98	0.94	
FF1ENP030	0.97	1.01	

COOLING INDOOR MODEL	CAPACITY	POWER	FURNACE MODEL
FF1ENP031	0.98	0.94	
FF1ENP036	0.97	1.06	
FF1ENP037	0.99	0.95	
FV4CN(B,F)003	0.98	0.91	
FV4CNF002	0.98	0.91	
FX4DN(B,F)031	1.00	0.96	
FX4DN(B,F)037	1.01	0.93	
FX4DNF025	0.99	0.92	
FY5BNF024	0.98	0.98	
FY5BNF030	0.99	0.99	
CAP**2414A**	0.97	0.93	58CV(A,X)070–12
CAP**2417A**	0.97	0.93	58CV(A,X)070–12
CAP**3014A**	0.97	0.89	58CV(A,X)070–12
CAP**3017A**	0.97	0.90	58CV(A,X)070–12
CAP**3614A**	0.97	0.90	58CV(A,X)070–12
CAP**3617A**	0.97	0.90	58CV(A,X)070–12
CNPH*2417A**	0.97	0.93	58CV(A,X)070–12
CNPH*3017A**	0.97	0.90	58CV(A,X)070–12
CNPH*3117A**	0.99	0.92	58CV(A,X)070–12
CNPH*3617A**	0.97	0.90	58CV(A,X)070–12
CNPV*1917A**	0.97	0.90	58CV(A,X)070–12
CNPV*2414A**	0.97	0.93	58CV(A,X)070–12
CNPV*2417A**	0.97	0.93	58CV(A,X)070–12
CNPV*3014A**	0.97	0.90	58CV(A,X)070–12
CNPV*3017A**	0.97	0.90	58CV(A,X)070–12
CNPV*3117A**	0.99	0.92	58CV(A,X)070–12
CNPV*3617A**	0.97	0.90	58CV(A,X)070–12
CSPH*2412A**	0.97	0.94	58CV(A,X)070–12
CSPH*3012A**	0.97	0.90	58CV(A,X)070–12
CSPH*3612A**	0.99	0.92	58CV(A,X)070–12
CAP**2417A**	0.97	0.89	58CV(A,X)090–16
CAP**3017A**	0.97	0.90	58CV(A,X)090–16
CAP**3617A**	0.97	0.90	58CV(A,X)090–16
CAP**3621A**	0.97	0.90	58CV(A,X)090–16

COOLING INDOOR MODEL	CAPACITY	POWER	FURNACE MODEL
CNPH*2417A**	0.97	0.89	58CV(A,X)090–16
CNPH*3017A**	0.97	0.90	58CV(A,X)090–16
CNPH*3117A**	0.99	0.92	58CV(A,X)090–16
CNPH*3617A**	0.97	0.90	58CV(A,X)090–16
CNPV*1917A**	0.97	0.90	58CV(A,X)090–16
CNPV*2417A**	0.97	0.89	58CV(A,X)090–16
CNPV*3017A**	0.97	0.90	58CV(A,X)090–16
CNPV*3117A**	0.99	0.92	58CV(A,X)090–16
CNPV*3617A**	0.97	0.90	58CV(A,X)090–16
CNPV*3621A**	0.97	0.90	58CV(A,X)090–16
CSPH*2412A**	0.98	0.91	58CV(A,X)090–16
CSPH*3012A**	0.98	0.91	58CV(A,X)090–16
CSPH*3612A**	0.99	0.92	58CV(A,X)090–16
CAP**3621A**	0.98	0.91	58CV(A,X)110–20
CNPH*2417A**	0.97	0.93	58CV(A,X)110–20
CNPH*3017A**	0.97	0.90	58CV(A,X)110–20
CNPH*3117A**	0.99	0.92	58CV(A,X)110–20
CNPH*3617A**	0.97	0.90	58CV(A,X)110–20
CNPV*3621A**	0.97	0.90	58CV(A,X)110–20
CSPH*2412A**	0.97	0.94	58CV(A,X)110–20
CSPH*3012A**	0.98	0.91	58CV(A,X)110–20
CSPH*3612A**	0.99	0.92	58CV(A,X)110–20
CNPH*2417A**	0.97	0.93	58CV(A,X)135–22
CNPH*3017A**	0.97	0.90	58CV(A,X)135–22
CNPH*3117A**	0.99	0.92	58CV(A,X)135–22
CNPH*3617A**	0.97	0.90	58CV(A,X)135–22
CSPH*2412A**	0.98	0.94	58CV(A,X)135–22
CSPH*3012A**	0.98	0.91	58CV(A,X)135–22
CSPH*3612A**	0.99	0.92	58CV(A,X)135–22
CNPH*2417A**	0.97	0.93	58CV(A,X)155–22
CNPH*3017A**	0.97	0.90	58CV(A,X)155–22
CNPH*3117A**	0.99	0.92	58CV(A,X)155–22
CNPH*3617A**	0.97	0.90	58CV(A,X)155–22
CSPH*2412A**	0.98	0.94	58CV(A,X)155–22

DETAILED COOLING CAPACITIES# CONTINUED

24ANB624A30 Outdoor Section With CNPV*3117A**+TDR Indoor Section**

COOLING INDOOR MODEL	CAPACITY	POWER	FURNACE MODEL
CSPH*3012A**	0.98	0.91	58CV(A,X)155–22
CSPH*3612A**	0.99	0.92	58CV(A,X)155–22
CNPH*2417A**	0.97	0.97	58HDV040––12
CNPH*3017A**	0.98	0.94	58HDV040––12
CNPH*3117A**	1.01	0.93	58HDV040––12
CNPV*2417A**	0.97	0.94	58HDV040––12
CNPV*3017A**	0.98	0.94	58HDV040––12
CNPV*3117A**	1.01	0.93	58HDV040––12
CSPH*2412A**	0.98	0.94	58HDV040––12
CSPH*3012A**	0.99	0.95	58HDV040––12
CNPH*2417A**	0.97	0.97	58HDV060––12
CNPH*3017A**	1.00	0.96	58HDV060––12
CNPH*3117A**	1.01	0.93	58HDV060––12
CNPV*2417A**	0.97	0.94	58HDV060––12
CNPV*3017A**	1.00	0.96	58HDV060––12
CNPV*3117A**	1.01	0.93	58HDV060––12
CSPH*2412A**	0.98	0.94	58HDV060––12
CSPH*3012A**	1.00	0.96	58HDV060––12
CNPH*2417A**	0.99	0.95	58HDV080––20
CNPH*3017A**	0.99	0.92	58HDV080––20
CNPH*3117A**	1.01	0.93	58HDV080––20
CSPH*2412A**	1.00	0.96	58HDV080––20
CSPH*3012A**	1.01	0.93	58HDV080––20
CNPH*2417A**	0.98	0.94	58HDV100––20
CNPH*3017A**	1.01	0.93	58HDV100––20
CNPH*3117A**	1.03	0.95	58HDV100––20
CSPH*2412A**	0.99	0.95	58HDV100––20
CSPH*3012A**	1.01	0.93	58HDV100––20
CAP**2417A**	0.99	0.92	58MEB040–12
CAP**3017A**	1.00	0.92	58MEB040–12
CAP**3617A**	1.00	0.92	58MEB040–12
CAP**3619A**	1.00	0.92	58MEB040–12
CAP**3621A**	1.01	0.93	58MEB040–12
CNPH*2417A**	0.98	0.91	58MEB040–12
CNPH*3017A**	1.00	0.92	58MEB040–12
CNPH*3117A**	1.01	0.93	58MEB040–12
CNPH*3617A**	1.00	0.92	58MEB040–12
CNPV*1917A**	1.00	0.92	58MEB040–12
CNPV*2417A**	0.98	0.91	58MEB040–12
CNPV*3017A**	1.00	0.92	58MEB040–12
CNPV*3117A**	1.01	0.93	58MEB040–12
CNPV*3617A**	1.00	0.92	58MEB040–12
CNPV*3621A**	1.00	0.92	58MEB040–12
CSPH*2412A**	0.99	0.92	58MEB040–12
CSPH*3012A**	1.00	0.92	58MEB040–12
CSPH*3612A**	1.01	0.93	58MEB040–12
CAP**2417A**	0.99	0.92	58MEC060–12
CAP**3017A**	1.00	0.92	58MEC060–12
CAP**3617A**	1.01	0.93	58MEC060–12
CAP**3619A**	1.01	0.93	58MEC060–12
CAP**3621A**	1.01	0.93	58MEC060–12
CNPH*2417A**	0.98	0.91	58MEC060–12
CNPH*3017A**	1.00	0.92	58MEC060–12
CNPH*3117A**	1.01	0.93	58MEC060–12
CNPH*3617A**	1.00	0.92	58MEC060–12
CNPV*1917A**	1.00	0.92	58MEC060–12

COOLING INDOOR MODEL	CAPACITY	POWER	FURNACE MODEL
CNPV*2417A**	0.98	0.91	58MEC060–12
CNPV*3017A**	1.00	0.92	58MEC060–12
CNPV*3117A**	1.01	0.93	58MEC060–12
CNPV*3617A**	1.00	0.92	58MEC060–12
CNPV*3621A**	1.00	0.92	58MEC060–12
CSPH*2412A**	0.99	0.92	58MEC060–12
CSPH*3012A**	1.00	0.92	58MEC060–12
CSPH*3612A**	1.01	0.93	58MEC060–12
CAP**2417A**	0.98	0.91	58MEC080–12
CAP**3017A**	0.99	0.92	58MEC080–12
CAP**3617A**	1.00	0.92	58MEC080–12
CAP**3621A**	1.00	0.92	58MEC080–12
CNPH*2417A**	0.97	0.90	58MEC080–12
CNPH*3017A**	0.99	0.92	58MEC080–12
CNPH*3117A**	1.01	0.93	58MEC080–12
CNPH*3617A**	0.99	0.92	58MEC080–12
CNPV*2417A**	0.97	0.90	58MEC080–12
CNPV*3017A**	0.99	0.92	58MEC080–12
CNPV*3117A**	1.01	0.93	58MEC080–12
CNPV*3617A**	0.99	0.92	58MEC080–12
CNPV*3621A**	0.99	0.92	58MEC080–12
CSPH*2412A**	0.98	0.91	58MEC080–12
CSPH*3012A**	0.99	0.92	58MEC080–12
CSPH*3612A**	1.01	0.93	58MEC080–12
CAP**2417A**	0.98	0.91	58MV(B,C)060–14
CAP**3017A**	0.98	0.91	58MV(B,C)060–14
CAP**3617A**	0.99	0.92	58MV(B,C)060–14
CAP**3621A**	0.99	0.92	58MV(B,C)060–14
CNPH*2417A**	0.97	0.94	58MV(B,C)060–14
CNPH*3017A**	0.98	0.91	58MV(B,C)060–14
CNPH*3117A**	1.01	0.93	58MV(B,C)060–14
CNPH*3617A**	0.98	0.91	58MV(B,C)060–14
CNPV*1917A**	0.99	0.92	58MV(B,C)060–14
CNPV*2417A**	0.97	0.94	58MV(B,C)060–14
CNPV*3017A**	0.98	0.91	58MV(B,C)060–14
CNPV*3117A**	1.01	0.93	58MV(B,C)060–14
CNPV*3617A**	0.98	0.91	58MV(B,C)060–14
CNPV*3621A**	0.98	0.91	58MV(B,C)060–14
CSPH*2412A**	0.99	0.92	58MV(B,C)060–14
CSPH*3012A**	0.99	0.92	58MV(B,C)060–14
CSPH*3612A**	1.01	0.93	58MV(B,C)060–14
CAP**3621A**	0.97	0.90	58MV(B,C)080–14
CNPH*2417A**	0.97	0.93	58MV(B,C)080–14
CNPH*3017A**	0.97	0.90	58MV(B,C)080–14
CNPH*3117A**	0.99	0.92	58MV(B,C)080–14
CNPH*3617A**	0.97	0.90	58MV(B,C)080–14
CNPV*3621A**	0.97	0.90	58MV(B,C)080–14
CSPH*2412A**	0.97	0.94	58MV(B,C)080–14
CSPH*3012A**	0.97	0.90	58MV(B,C)080–14
CSPH*3612A**	0.99	0.92	58MV(B,C)080–14
CAP**3621A**	0.97	0.89	58MV(B,C)080–20
CNPH*2417A**	0.96	0.92	58MV(B,C)080–20
CNPH*3017A**	0.97	0.89	58MV(B,C)080–20
CNPH*3117A**	0.98	0.91	58MV(B,C)080–20
CNPH*3617A**	0.97	0.89	58MV(B,C)080–20
CNPV*3621A**	0.97	0.89	58MV(B,C)080–20

COOLING INDOOR MODEL	CAPACITY	POWER	FURNACE MODEL
CSPH*2412A**	0.97	0.93	58MV(B,C)080–20
CSPH*3012A**	0.97	0.89	58MV(B,C)080–20
CSPH*3612A**	0.98	0.91	58MV(B,C)080–20
CAP**3621A**	0.97	0.90	58MV(B,C)100–20
CNPH*2417A**	0.97	0.93	58MV(B,C)100–20
CNPH*3017A**	0.97	0.90	58MV(B,C)100–20
CNPH*3117A**	0.99	0.92	58MV(B,C)100–20
CNPH*3617A**	0.97	0.90	58MV(B,C)100–20
CNPV*3621A**	0.97	0.90	58MV(B,C)100–20
CSPH*2412A**	0.97	0.90	58MV(B,C)100–20
CSPH*3012A**	0.97	0.90	58MV(B,C)100–20
CSPH*3612A**	0.99	0.92	58MV(B,C)100–20
CNPH*2417A**	0.97	0.90	58MV(B,C)120–20
CNPH*3017A**	0.98	0.91	58MV(B,C)120–20
CNPH*3117A**	1.00	0.92	58MV(B,C)120–20
CNPH*3617A**	0.98	0.91	58MV(B,C)120–20
CSPH*2412A**	0.98	0.91	58MV(B,C)120–20
CSPH*3012A**	0.98	0.91	58MV(B,C)120–20
CSPH*3612A**	1.00	0.92	58MV(B,C)120–20
CNPH*2417A**	0.97	0.93	58MVB040–14
CNPH*3017A**	0.97	0.90	58MVB040–14
CNPH*3117A**	0.99	0.92	58MVB040–14
CNPH*3617A**	0.97	0.90	58MVB040–14
CSPH*2412A**	0.97	0.94	58MVB040–14
CSPH*3012A**	0.97	0.90	58MVB040–14
CSPH*3612A**	0.99	0.92	58MVB040–14
CAP**2414A**	0.97	0.94	58PH*045–08
CAP**2417A**	0.97	0.94	58PH*045–08
CAP**3014A**	0.98	0.94	58PH*045–08
CAP**3017A**	0.98	0.91	58PH*045–08
CAP**3614A**	0.98	0.91	58PH*045–08
CAP**3617A**	0.99	0.92	58PH*045–08
CNPH*2417A**	0.97	0.94	58PH*045–08
CNPH*3017A**	0.98	0.91	58PH*045–08
CNPH*3117A**	1.01	0.93	58PH*045–08
CNPH*3617A**	0.98	0.91	58PH*045–08
CNPV*1917A**	0.98	0.91	58PH*045–08
CNPV*2414A**	0.97	0.94	58PH*045–08
CNPV*2417A**	0.97	0.94	58PH*045–08
CNPV*3014A**	0.98	0.94	58PH*045–08
CNPV*3017A**	0.98	0.91	58PH*045–08
CNPV*3117A**	1.01	0.93	58PH*045–08
CNPV*3617A**	0.98	0.91	58PH*045–08
CSPH*2412A**	0.98	0.94	58PH*045–08
CSPH*3012A**	0.98	0.91	58PH*045–08
CSPH*3612A**	1.00	0.92	58PH*045–08
CAP**2417A**	0.97	0.94	OVLAAB036098
CAP**3017A**	0.98	0.91	OVLAAB036098
CNPH*2417A**	0.97	0.94	OVLAAB036098
CNPH*3017A**	0.98	0.91	OVLAAB036098
CNPH*3117A**	1.00	0.92	OVLAAB036098
CNPV*2417A**	0.98	0.94	OVLAAB036098
CNPV*3017A**	0.98	0.91	OVLAAB036098
CNPV*3117A**	1.00	0.92	OVLAAB036098
CSPH*2412A**	0.98	0.94	OVLAAB036098

DETAILED COOLING CAPACITIES# CONTINUED

24ANB624A30 Outdoor Section With CNPV*3117A**+TDR Indoor Section**

COOLING INDOOR MODEL	CAPACITY	POWER	FURNACE MODEL
CSPH*3012A**	0.99	0.92	OVLAAB036098
CAP**2417A**	0.97	0.94	OVMAAB036098
CAP**3017A**	0.98	0.91	OVMAAB036098
CNPH*2417A**	0.97	0.94	OVMAAB036098
CNPH*3017A**	0.98	0.91	OVMAAB036098
CNPH*3117A**	1.00	0.92	OVMAAB036098
CNPV*2417A**	0.97	0.94	OVMAAB036098
CNPV*3017A**	0.98	0.91	OVMAAB036098
CNPV*3117A**	1.00	0.92	OVMAAB036098
CSPH*2412A**	0.98	0.94	OVMAAB036098
CSPH*3012A**	0.99	0.92	OVMAAB036098
CAP**2417A**	0.97	0.90	OVMAAB042112
CAP**3017A**	0.97	0.90	OVMAAB042112
CNPH*2417A**	0.97	0.94	OVMAAB042112
CNPH*3017A**	0.98	0.91	OVMAAB042112
CNPH*3117A**	1.00	0.92	OVMAAB042112
CNPV*2417A**	0.97	0.94	OVMAAB042112
CNPV*3017A**	0.98	0.91	OVMAAB042112
CNPV*3117A**	1.00	0.92	OVMAAB042112
CSPH*2412A**	0.98	0.94	OVMAAB042112
CSPH*3012A**	0.98	0.91	OVMAAB042112

See notes on pg. 51

DETAILED COOLING CAPACITIES# CONTINUED

EVAPORATOR AIR		CONDENSER ENTERING AIR TEMPERATURES °F (°C)																	
		75 (23.9)			85 (29.4)			95 (35)			105 (40.6)			115 (46.1)			125 (51.7)		
CFM	EWB °F (°C)	Capacity MBtuh		Total Sys. KW**	Capacity MBtuh		Total Sys. KW**	Capacity MBtuh		Total Sys. KW**	Capacity MBtuh		Total Sys. KW**	Capacity MBtuh		Total Sys. KW**	Capacity MBtuh		Total Sys. KW**
		Total	Sens‡		Total	Sens‡		Total	Sens‡		Total	Sens‡		Total	Sens‡		Total	Sens‡	
24ANB630A**30 Outdoor Section With CNPV*3117A**+TDR Indoor Section																			
900	72 (22.2)	34.12	17.11	1.85	32.53	16.70	2.08	30.88	16.26	2.34	29.15	15.80	2.64	27.28	15.28	2.99	25.26	14.70	3.40
	67 (19.4)	31.02	21.15	1.86	29.57	20.76	2.09	28.06	20.35	2.35	26.46	19.90	2.65	24.74	19.40	3.00	22.87	18.83	3.40
	63 (17.2)††	28.79	20.32	1.87	27.44	19.93	2.09	26.03	19.51	2.35	24.52	19.04	2.65	22.89	18.52	3.00	21.12	17.93	3.40
	62 (16.7)	28.37	25.13	1.87	27.08	24.75	2.09	25.78	25.70	2.35	24.55	24.55	2.65	23.21	23.21	3.00	21.75	21.75	3.40
	57 (13.9)	27.93	27.93	1.87	26.86	26.86	2.09	25.73	25.73	2.35	24.51	24.51	2.65	23.18	23.18	3.00	21.72	21.72	3.40
1000	72 (22.2)	34.56	17.82	1.89	32.92	17.41	2.11	31.23	16.97	2.38	29.45	16.51	2.68	27.53	15.99	3.03	25.46	15.41	3.44
	67 (19.4)	31.45	22.30	1.90	29.95	21.91	2.12	28.40	21.50	2.38	26.76	21.05	2.68	25.00	20.54	3.03	23.09	19.97	3.44
	63 (17.2)††	29.21	21.39	1.90	27.81	21.00	2.13	26.36	20.57	2.39	24.81	20.10	2.69	23.15	19.58	3.04	21.35	18.98	3.44
	62 (16.7)	28.93	28.68	1.90	27.74	27.74	2.13	26.55	26.55	2.39	25.27	25.27	2.69	23.88	23.88	3.03	22.35	22.35	3.44
	57 (13.9)	28.84	28.84	1.90	27.70	27.70	2.13	26.52	26.52	2.39	25.23	25.23	2.69	23.85	23.85	3.03	22.32	22.32	3.44
1125	72 (22.2)	34.98	18.68	1.93	33.28	18.26	2.16	31.54	17.83	2.42	29.70	17.36	2.73	27.74	16.84	3.08	25.63	16.26	3.49
	67 (19.4)	31.86	23.68	1.94	30.31	23.29	2.17	28.73	22.88	2.43	27.04	22.43	2.73	25.25	21.91	3.08	23.32	21.32	3.49
	63 (17.2)††	29.61	22.67	1.94	28.18	22.28	2.17	26.68	21.85	2.43	25.10	21.38	2.73	23.41	20.84	3.08	21.59	20.22	3.49
	62 (16.7)	29.84	29.84	1.94	28.63	28.63	2.17	27.38	27.38	2.43	26.02	26.02	2.73	24.56	24.56	3.08	22.96	22.96	3.49
	57 (13.9)	29.80	29.80	1.94	28.59	28.59	2.17	27.34	27.34	2.43	25.99	25.99	2.73	24.53	24.53	3.08	22.93	22.93	3.49

COOLING INDOOR MODEL	CAPACITY	POWER	FURNACE MODEL
*CNPV*3117A**	1.00	1.00	
CAP**3014A**	0.98	0.98	
CAP**3017A**	0.98	0.98	
CAP**3614A**	0.98	0.98	
CAP**3617A**	0.98	0.98	
CAP**3619A**	0.98	1.02	
CAP**3621A**	0.98	0.98	
CAP**4221A**	0.99	1.03	
CAP**4224A**	0.99	1.03	
CNPF*3618A**	0.98	1.02	
CNPH*3017A**	0.98	0.98	
CNPH*3117A**	1.00	1.00	
CNPH*3617A**	0.98	0.98	
CNPH*4221A**	0.99	1.04	
CNPV*3014A**	0.98	0.98	
CNPV*3017A**	0.98	0.98	
CNPV*3617A**	0.98	0.98	
CNPV*3621A**	0.98	0.98	
CNPV*3717A**	1.01	1.01	
CNPV*4217A**	1.00	1.00	
CNPV*4221A**	0.99	1.04	
CSPH*3012A**	0.99	1.03	
CSPH*3612A**	1.00	1.00	
CSPH*4212A**	1.01	1.01	
FB4CNF030	0.99	0.95	
FB4CNF036	0.99	0.95	
FB4CNF042	1.00	1.00	
FE4AN(B,F)003	0.99	0.91	
FE4AN(B,F)005	1.01	0.93	
FE4ANF002	0.99	0.91	
FE5ANB004	1.02	0.94	
FF1ENP030	0.97	0.97	
FF1ENP031	0.99	0.95	
FF1ENP036	0.99	0.99	
FF1ENP037	0.99	0.95	
FV4CN(B,F)003	0.99	0.91	
FV4CN(B,F)005	1.01	0.90	
FV4CNF002	0.99	0.91	
FX4DN(B,F)031	1.00	0.92	

COOLING INDOOR MODEL	CAPACITY	POWER	FURNACE MODEL
FX4DN(B,F)037	1.01	0.94	
FX4DN(B,F)043	1.01	0.97	
FY5BNF030	0.99	0.95	
FY5BNF036	0.99	0.99	
CAP**3014A**	0.97	0.93	58CV(A,X)070–12
CAP**3017A**	0.97	0.93	58CV(A,X)070–12
CAP**3614A**	0.97	0.93	58CV(A,X)070–12
CAP**3617A**	0.98	0.94	58CV(A,X)070–12
CNPH*3017A**	0.97	0.93	58CV(A,X)070–12
CNPH*3117A**	0.99	0.92	58CV(A,X)070–12
CNPH*3617A**	0.97	0.93	58CV(A,X)070–12
CNPH*4221A**	0.99	0.91	58CV(A,X)070–12
CNPV*3014A**	0.97	0.93	58CV(A,X)070–12
CNPV*3017A**	0.97	0.93	58CV(A,X)070–12
CNPV*3117A**	0.99	0.92	58CV(A,X)070–12
CNPV*3617A**	0.97	0.93	58CV(A,X)070–12
CNPV*4217A**	0.99	0.91	58CV(A,X)070–12
CSPH*3012A**	0.98	0.94	58CV(A,X)070–12
CSPH*3612A**	0.99	0.92	58CV(A,X)070–12
CSPH*4212A**	1.00	0.92	58CV(A,X)070–12
CAP**3017A**	0.97	0.90	58CV(A,X)090–16
CAP**3617A**	0.98	0.90	58CV(A,X)090–16
CAP**3621A**	0.98	0.90	58CV(A,X)090–16
CAP**4221A**	0.99	0.91	58CV(A,X)090–16
CNPH*3017A**	0.98	0.90	58CV(A,X)090–16
CNPH*3117A**	0.99	0.92	58CV(A,X)090–16
CNPH*3617A**	0.98	0.90	58CV(A,X)090–16
CNPH*4221A**	0.99	0.91	58CV(A,X)090–16
CNPV*3017A**	0.98	0.90	58CV(A,X)090–16
CNPV*3117A**	0.99	0.92	58CV(A,X)090–16
CNPV*3617A**	0.98	0.90	58CV(A,X)090–16
CNPV*3621A**	0.98	0.90	58CV(A,X)090–16
CNPV*3717A**	1.01	0.93	58CV(A,X)090–16
CNPV*4217A**	0.99	0.92	58CV(A,X)090–16
CNPV*4221A**	0.99	0.91	58CV(A,X)090–16
CSPH*3012A**	0.98	0.90	58CV(A,X)090–16
CSPH*3612A**	0.99	0.92	58CV(A,X)090–16
CSPH*4212A**	1.00	0.92	58CV(A,X)090–16
CAP**3621A**	0.98	0.90	58CV(A,X)110–20

COOLING INDOOR MODEL	CAPACITY	POWER	FURNACE MODEL
CAP**4221A**	0.99	0.91	58CV(A,X)110–20
CAP**4224A**	0.99	0.91	58CV(A,X)110–20
CNPH*3017A**	0.98	0.90	58CV(A,X)110–20
CNPH*3117A**	1.00	0.92	58CV(A,X)110–20
CNPH*3617A**	0.98	0.90	58CV(A,X)110–20
CNPH*4221A**	0.99	0.91	58CV(A,X)110–20
CNPV*3621A**	0.98	0.90	58CV(A,X)110–20
CNPV*4221A**	0.99	0.91	58CV(A,X)110–20
CSPH*3012A**	0.98	0.90	58CV(A,X)110–20
CSPH*3612A**	1.00	0.92	58CV(A,X)110–20
CSPH*4212A**	1.00	0.92	58CV(A,X)110–20
CAP**4224A**	0.99	0.91	58CV(A,X)135–22
CNPH*3017A**	0.98	0.90	58CV(A,X)135–22
CNPH*3117A**	1.00	0.92	58CV(A,X)135–22
CNPH*3617A**	0.98	0.90	58CV(A,X)135–22
CNPH*4221A**	0.99	0.91	58CV(A,X)135–22
CSPH*3012A**	0.98	0.90	58CV(A,X)135–22
CSPH*3612A**	1.00	0.92	58CV(A,X)135–22
CSPH*4212A**	1.00	0.92	58CV(A,X)135–22
CAP**4224A**	0.99	0.91	58CV(A,X)155–22
CNPH*3017A**	0.98	0.90	58CV(A,X)155–22
CNPH*3117A**	1.00	0.92	58CV(A,X)155–22
CNPH*3617A**	0.98	0.90	58CV(A,X)155–22
CNPH*4221A**	0.99	0.91	58CV(A,X)155–22
CSPH*3012A**	0.98	0.90	58CV(A,X)155–22
CSPH*3612A**	1.00	0.92	58CV(A,X)155–22
CSPH*4212A**	1.00	0.92	58CV(A,X)155–22
CAP**3619A**	0.98	0.94	58HDV040––12
CNPH*3017A**	0.98	0.98	58HDV040––12
CNPH*3117A**	1.00	0.96	58HDV040––12
CNPH*3617A**	0.98	0.98	58HDV040––12
CNPV*3017A**	0.98	0.94	58HDV040––12
CNPV*3117A**	1.00	0.96	58HDV040––12
CNPV*3617A**	0.98	0.94	58HDV040––12
CNPV*3621A**	0.98	0.94	58HDV040––12
CNPV*3717A**	1.01	0.93	58HDV040––12
CSPH*3012A**	0.98	0.94	58HDV040––12
CSPH*3612A**	1.00	0.96	58HDV040––12
CAP**3619A**	0.99	0.95	58HDV060––12

DETAILED COOLING CAPACITIES# CONTINUED

24ANB630A30 Outdoor Section With CNPV*3117A**+TDR Indoor Section**

COOLING INDOOR MODEL	CAPACITY	POWER	FURNACE MODEL
CNPH*3017A**	0.98	0.98	58HDV060– –12
CNPH*3117A**	1.01	0.97	58HDV060– –12
CNPH*3617A**	0.98	0.98	58HDV060– –12
CNPV*3017A**	0.98	0.94	58HDV060– –12
CNPV*3117A**	1.01	0.97	58HDV060– –12
CNPV*3617A**	0.98	0.94	58HDV060– –12
CNPV*3621A**	0.98	0.94	58HDV060– –12
CNPV*3717A**	1.02	0.94	58HDV060– –12
CSPH*3012A**	0.98	0.94	58HDV060– –12
CSPH*3612A**	1.01	0.97	58HDV060– –12
CNPH*3017A**	0.99	0.95	58HDV080– –20
CNPH*3117A**	1.01	0.94	58HDV080– –20
CNPH*3617A**	0.99	0.95	58HDV080– –20
CNPV*3621A**	0.99	0.95	58HDV080– –20
CSPH*3012A**	0.99	0.95	58HDV080– –20
CSPH*3612A**	1.01	0.94	58HDV080– –20
CNPH*3017A**	0.99	0.95	58HDV100– –20
CNPH*3117A**	1.01	0.93	58HDV100– –20
CNPH*3617A**	0.99	0.95	58HDV100– –20
CSPH*3012A**	0.99	0.95	58HDV100– –20
CSPH*3612A**	1.01	0.93	58HDV100– –20
CAP**3017A**	0.99	0.91	58MEB040–12
CAP**3617A**	0.99	0.92	58MEB040–12
CAP**3621A**	0.99	0.92	58MEB040–12
CAP**4221A**	1.00	0.92	58MEB040–12
CNPH*3017A**	0.99	0.91	58MEB040–12
CNPH*3117A**	1.01	0.93	58MEB040–12
CNPH*3617A**	0.99	0.91	58MEB040–12
CNPH*4221A**	1.00	0.92	58MEB040–12
CNPV*3017A**	0.99	0.91	58MEB040–12
CNPV*3117A**	1.01	0.93	58MEB040–12
CNPV*3617A**	0.99	0.91	58MEB040–12
CNPV*3621A**	0.99	0.91	58MEB040–12
CNPV*3717A**	1.02	0.91	58MEB040–12
CNPV*4217A**	1.01	0.93	58MEB040–12
CNPV*4221A**	1.00	0.92	58MEB040–12
CSPH*3012A**	0.99	0.91	58MEB040–12
CSPH*3612A**	1.01	0.93	58MEB040–12
CSPH*4212A**	1.01	0.94	58MEB040–12
CAP**3017A**	0.99	0.91	58MEC060–12
CAP**3617A**	0.99	0.92	58MEC060–12
CAP**3621A**	0.99	0.92	58MEC060–12
CAP**4221A**	1.00	0.92	58MEC060–12
CNPH*3017A**	0.99	0.91	58MEC060–12
CNPH*3117A**	1.01	0.94	58MEC060–12
CNPH*3617A**	0.99	0.91	58MEC060–12
CNPH*4221A**	1.00	0.92	58MEC060–12
CNPV*3017A**	0.99	0.91	58MEC060–12
CNPV*3117A**	1.01	0.94	58MEC060–12
CNPV*3617A**	0.99	0.91	58MEC060–12
CNPV*3621A**	0.99	0.91	58MEC060–12
CNPV*3717A**	1.02	0.91	58MEC060–12
CNPV*4217A**	1.01	0.93	58MEC060–12
CNPV*4221A**	1.00	0.92	58MEC060–12
CSPH*3012A**	0.99	0.91	58MEC060–12
CSPH*3612A**	1.01	0.93	58MEC060–12
CSPH*4212A**	1.01	0.94	58MEC060–12
CAP**3017A**	0.99	0.91	58MEC080–12
CAP**3617A**	0.99	0.91	58MEC080–12

COOLING INDOOR MODEL	CAPACITY	POWER	FURNACE MODEL
CAP**3621A**	0.99	0.92	58MEC080–12
CAP**4221A**	1.00	0.92	58MEC080–12
CNPH*3017A**	0.99	0.91	58MEC080–12
CNPH*3117A**	1.01	0.93	58MEC080–12
CNPH*3617A**	0.99	0.91	58MEC080–12
CNPH*4221A**	0.99	0.92	58MEC080–12
CNPV*3017A**	0.99	0.91	58MEC080–12
CNPV*3117A**	1.01	0.93	58MEC080–12
CNPV*3617A**	0.99	0.91	58MEC080–12
CNPV*3621A**	0.99	0.91	58MEC080–12
CNPV*3717A**	1.02	0.91	58MEC080–12
CNPV*4217A**	1.00	0.92	58MEC080–12
CNPV*4221A**	0.99	0.92	58MEC080–12
CSPH*3012A**	0.99	0.91	58MEC080–12
CSPH*3612A**	1.01	0.93	58MEC080–12
CSPH*4212A**	1.01	0.94	58MEC080–12
CAP**3017A**	0.99	0.92	58MEC080–16
CAP**3617A**	0.99	0.92	58MEC080–16
CAP**3621A**	1.00	0.92	58MEC080–16
CAP**4221A**	1.01	0.93	58MEC080–16
CNPH*3017A**	0.99	0.92	58MEC080–16
CNPH*3117A**	1.01	0.94	58MEC080–16
CNPH*3617A**	0.99	0.92	58MEC080–16
CNPH*4221A**	1.00	0.92	58MEC080–16
CNPV*3017A**	0.99	0.92	58MEC080–16
CNPV*3117A**	1.01	0.94	58MEC080–16
CNPV*3617A**	0.99	0.92	58MEC080–16
CNPV*3621A**	0.99	0.92	58MEC080–16
CNPV*3717A**	1.03	0.95	58MEC080–16
CNPV*4217A**	1.01	0.93	58MEC080–16
CNPV*4221A**	1.00	0.92	58MEC080–16
CSPH*3012A**	0.99	0.92	58MEC080–16
CSPH*3612A**	1.01	0.94	58MEC080–16
CSPH*4212A**	1.02	0.94	58MEC080–16
CAP**3017A**	0.98	0.90	58MV(B,C)060–14
CAP**3017A**	0.98	0.94	58MV(B,C)060–14
CAP**3617A**	0.99	0.91	58MV(B,C)060–14
CAP**3621A**	0.99	0.91	58MV(B,C)060–14
CAP**4221A**	0.99	0.91	58MV(B,C)060–14
CNPH*3017A**	0.98	0.90	58MV(B,C)060–14
CNPH*3117A**	1.00	0.92	58MV(B,C)060–14
CNPH*3617A**	0.98	0.90	58MV(B,C)060–14
CNPH*4221A**	0.99	0.92	58MV(B,C)060–14
CNPV*3017A**	0.98	0.90	58MV(B,C)060–14
CNPV*3117A**	1.00	0.92	58MV(B,C)060–14
CNPV*3617A**	0.98	0.90	58MV(B,C)060–14
CNPV*3621A**	0.98	0.90	58MV(B,C)060–14
CNPV*3717A**	1.01	0.94	58MV(B,C)060–14
CNPV*4217A**	0.99	0.92	58MV(B,C)060–14
CNPV*4221A**	0.99	0.92	58MV(B,C)060–14
CSPH*3012A**	0.99	0.91	58MV(B,C)060–14
CSPH*3612A**	1.00	0.92	58MV(B,C)060–14
CSPH*4212A**	1.01	0.93	58MV(B,C)060–14
CAP**3621A**	0.97	0.90	58MV(B,C)080–14
CAP**4221A**	0.98	0.90	58MV(B,C)080–14
CAP**4224A**	0.98	0.90	58MV(B,C)080–14
CNPH*3017A**	0.97	0.93	58MV(B,C)080–14
CNPH*3117A**	0.99	0.92	58MV(B,C)080–14
CNPH*3617A**	0.97	0.93	58MV(B,C)080–14

COOLING INDOOR MODEL	CAPACITY	POWER	FURNACE MODEL
CNPH*4221A**	0.98	0.90	58MV(B,C)080–14
CNPV*3621A**	0.97	0.93	58MV(B,C)080–14
CNPV*4221A**	0.98	0.90	58MV(B,C)080–14
CSPH*3012A**	0.97	0.93	58MV(B,C)080–14
CSPH*3612A**	0.99	0.92	58MV(B,C)080–14
CSPH*4212A**	0.99	0.92	58MV(B,C)080–14
CAP**3621A**	0.98	0.90	58MV(B,C)080–20
CAP**4221A**	0.99	0.91	58MV(B,C)080–20
CAP**4224A**	0.99	0.91	58MV(B,C)080–20
CNPH*3017A**	0.97	0.93	58MV(B,C)080–20
CNPH*3117A**	0.99	0.92	58MV(B,C)080–20
CNPH*3617A**	0.97	0.93	58MV(B,C)080–20
CNPH*4221A**	0.99	0.91	58MV(B,C)080–20
CNPV*3621A**	0.97	0.93	58MV(B,C)080–20
CNPV*4221A**	0.99	0.91	58MV(B,C)080–20
CSPH*3012A**	0.98	0.94	58MV(B,C)080–20
CSPH*3612A**	0.99	0.92	58MV(B,C)080–20
CSPH*4212A**	1.00	0.92	58MV(B,C)080–20
CAP**3621A**	0.97	0.90	58MV(B,C)100–20
CAP**4221A**	0.98	0.90	58MV(B,C)100–20
CAP**4224A**	0.98	0.90	58MV(B,C)100–20
CNPH*3017A**	0.96	0.93	58MV(B,C)100–20
CNPH*3117A**	0.99	0.91	58MV(B,C)100–20
CNPH*3617A**	0.96	0.93	58MV(B,C)100–20
CNPH*4221A**	0.98	0.90	58MV(B,C)100–20
CNPV*3621A**	0.96	0.93	58MV(B,C)100–20
CNPV*4221A**	0.98	0.90	58MV(B,C)100–20
CSPH*3012A**	0.97	0.93	58MV(B,C)100–20
CSPH*3612A**	0.99	0.91	58MV(B,C)100–20
CSPH*4212A**	0.99	0.92	58MV(B,C)100–20
CAP**4224A**	0.99	0.91	58MV(B,C)120–20
CNPH*3017A**	0.98	0.90	58MV(B,C)120–20
CNPH*3117A**	1.00	0.92	58MV(B,C)120–20
CNPH*3617A**	0.98	0.90	58MV(B,C)120–20
CNPH*4221A**	0.99	0.91	58MV(B,C)120–20
CSPH*3012A**	0.98	0.90	58MV(B,C)120–20
CSPH*3612A**	0.99	0.92	58MV(B,C)120–20
CSPH*4212A**	1.00	0.92	58MV(B,C)120–20
CAP**4224A**	0.98	0.90	58MVB040–14
CNPH*3017A**	0.97	0.93	58MVB040–14
CNPH*3117A**	0.99	0.92	58MVB040–14
CNPH*3617A**	0.97	0.93	58MVB040–14
CNPH*4221A**	0.98	0.90	58MVB040–14
CSPH*3012A**	0.98	0.94	58MVB040–14
CSPH*3612A**	0.99	0.92	58MVB040–14
CSPH*4212A**	1.00	0.92	58MVB040–14
CAP**3017A**	0.98	0.94	58PH*070–16
CAP**3617A**	0.99	0.95	58PH*070–16
CAP**3621A**	0.99	0.95	58PH*070–16
CAP**4221A**	0.99	0.95	58PH*070–16
CNPH*3017A**	0.98	0.94	58PH*070–16
CNPH*3117A**	1.00	0.92	58PH*070–16
CNPH*3617A**	0.98	0.94	58PH*070–16
CNPH*4221A**	0.99	0.95	58PH*070–16
CNPV*3017A**	0.98	0.94	58PH*070–16
CNPV*3117A**	1.00	0.92	58PH*070–16
CNPV*3617A**	0.98	0.94	58PH*070–16
CNPV*3621A**	0.98	0.94	58PH*070–16
CNPV*3717A**	1.01	0.94	58PH*070–16

DETAILED COOLING CAPACITIES# CONTINUED

24ANB630A30 Outdoor Section With CNPV*3117A**+TDR Indoor Section**

COOLING INDOOR MODEL	CAPACITY	POWER	FURNACE MODEL
CNPV*4217A**	1.00	0.92	58PH*070–16
CNPV*4221A**	0.99	0.95	58PH*070–16
CSPH*3012A**	0.98	0.94	58PH*070–16
CSPH*3612A**	1.00	0.92	58PH*070–16
CSPH*4212A**	1.01	0.93	58PH*070–16
CAP**3621A**	0.99	0.92	58PH*090–16
CAP**4221A**	1.00	0.92	58PH*090–16
CAP**4224A**	1.00	0.92	58PH*090–16
CNPH*3017A**	0.98	0.94	58PH*090–16
CNPH*3117A**	1.01	0.93	58PH*090–16
CNPH*3617A**	0.98	0.94	58PH*090–16
CNPH*4221A**	0.99	0.92	58PH*090–16
CNPV*3621A**	0.98	0.94	58PH*090–16
CNPV*4221A**	0.99	0.92	58PH*090–16
CSPH*3012A**	0.98	0.94	58PH*090–16
CSPH*3612A**	1.01	0.93	58PH*090–16
CSPH*4212A**	1.01	0.94	58PH*090–16
CAP**3017A**	0.97	0.93	OVLAAB036098
CAP**3617A**	0.98	0.94	OVLAAB036098
CNPH*3017A**	0.98	0.94	OVLAAB036098
CNPH*3117A**	1.00	0.92	OVLAAB036098
CNPH*3617A**	0.98	0.94	OVLAAB036098
CNPV*3017A**	0.98	0.94	OVLAAB036098
CNPV*3117A**	1.00	0.92	OVLAAB036098
CNPV*3617A**	0.98	0.94	OVLAAB036098
CNPV*3717A**	1.01	0.93	OVLAAB036098
CSPH*3012A**	0.98	0.94	OVLAAB036098
CSPH*3612A**	0.99	0.92	OVLAAB036098
CAP**3621A**	0.99	0.95	OVLAAB048112
CNPH*3017A**	0.99	0.95	OVLAAB048112
CNPH*3117A**	1.01	0.93	OVLAAB048112
CNPH*3617A**	0.99	0.95	OVLAAB048112
CNPV*3621A**	0.99	0.95	OVLAAB048112
CSPH*3012A**	0.99	0.95	OVLAAB048112
CSPH*3612A**	1.01	0.97	OVLAAB048112
CAP**3017A**	0.98	0.94	OVMAAB036098
CAP**3617A**	0.98	0.94	OVMAAB036098
CNPH*3017A**	0.98	0.94	OVMAAB036098
CNPH*3117A**	1.00	0.96	OVMAAB036098
CNPH*3617A**	0.98	0.94	OVMAAB036098
CNPV*3017A**	0.98	0.94	OVMAAB036098
CNPV*3117A**	1.00	0.92	OVMAAB036098
CNPV*3617A**	0.98	0.94	OVMAAB036098
CNPV*3717A**	1.01	0.93	OVMAAB036098
CSPH*3012A**	0.98	0.94	OVMAAB036098
CSPH*3612A**	1.00	0.96	OVMAAB036098
CAP**3017A**	0.98	0.94	OVMAAB042112
CAP**3617A**	0.99	0.95	OVMAAB042112
CNPH*3017A**	0.98	0.94	OVMAAB042112
CNPH*3117A**	1.00	0.92	OVMAAB042112
CNPH*3617A**	0.98	0.94	OVMAAB042112
CNPV*3017A**	0.98	0.94	OVMAAB042112
CNPV*3117A**	1.00	0.92	OVMAAB042112
CNPV*3617A**	0.98	0.94	OVMAAB042112
CNPV*3717A**	1.01	0.94	OVMAAB042112
CSPH*3012A**	0.99	0.95	OVMAAB042112
CSPH*3612A**	1.00	0.92	OVMAAB042112

See notes on pg. 51

DETAILED COOLING CAPACITIES# CONTINUED

EVAPORATOR AIR		CONDENSER ENTERING AIR TEMPERATURES °F (°C)																	
		75 (23.9)			85 (29.4)			95 (35)			105 (40.6)			115 (46.1)			125 (51.7)		
CFM	EWB °F (°C)	Capacity MBtuh		Total Sys. KW**	Capacity MBtuh		Total Sys. KW**	Capacity MBtuh		Total Sys. KW**	Capacity MBtuh		Total Sys. KW**	Capacity MBtuh		Total Sys. KW**	Capacity MBtuh		Total Sys. KW**
		Total	Sens‡		Total	Sens‡		Total	Sens‡		Total	Sens‡		Total	Sens‡		Total	Sens‡	
24ANB636A**30 Outdoor Section With CNPV*3717A**+TDR Indoor Section																			
1050	72 (22.2)	41.79	21.33	2.30	39.58	20.21	2.55	37.29	19.10	2.83	34.92	17.98	3.14	32.46	16.86	3.51	29.88	15.74	3.93
	67 (19.4)	37.98	26.27	2.28	35.95	25.04	2.53	33.86	23.81	2.81	31.68	22.58	3.12	29.42	21.34	3.49	27.06	20.10	3.92
	63 (17.2)††	35.23	25.25	2.27	33.34	24.04	2.52	31.38	22.83	2.79	29.34	21.61	3.11	27.22	20.39	3.48	25.00	19.15	3.91
	62 (16.7)	34.66	31.16	2.26	32.83	29.80	2.51	30.98	28.42	2.79	29.22	29.22	3.11	27.47	27.47	3.48	25.61	25.61	3.91
	57 (13.9)	33.97	33.97	2.26	32.44	32.44	2.51	30.85	30.85	2.79	29.18	29.18	3.11	27.42	27.42	3.48	25.57	25.57	3.91
1200	72 (22.2)	42.51	22.47	2.36	40.20	21.32	2.61	37.84	20.17	2.89	35.39	19.02	3.20	32.84	17.87	3.57	30.20	16.71	3.99
	67 (19.4)	38.68	28.11	2.34	36.57	26.83	2.59	34.40	25.54	2.87	32.16	24.26	3.18	29.82	22.96	3.55	27.40	21.67	3.97
	63 (17.2)††	35.91	26.96	2.33	33.94	25.70	2.58	31.91	24.44	2.85	29.80	23.17	3.17	27.61	21.89	3.54	25.35	20.60	3.97
	62 (16.7)	35.54	35.26	2.32	33.84	33.84	2.58	32.14	32.14	2.85	30.35	30.35	3.17	28.49	28.49	3.54	26.52	26.52	3.97
	57 (13.9)	35.43	35.43	2.32	33.79	33.79	2.58	32.09	32.09	2.85	30.31	30.31	3.17	28.45	28.45	3.54	26.48	26.48	3.97
1350	72 (22.2)	43.03	23.57	2.42	40.66	22.38	2.67	38.23	21.20	2.95	35.70	20.02	3.26	33.10	18.84	3.63	30.39	17.65	4.04
	67 (19.4)	39.19	29.87	2.40	37.03	28.54	2.65	34.81	27.21	2.93	32.50	25.87	3.24	30.12	24.52	3.61	27.67	23.16	4.03
	63 (17.2)††	36.41	28.60	2.39	34.39	27.29	2.64	32.31	25.98	2.91	30.15	24.66	3.23	27.92	23.33	3.60	25.62	21.97	4.03
	62 (16.7)	36.68	36.68	2.39	34.95	34.95	2.64	33.16	33.16	2.92	31.28	31.28	3.24	29.32	29.32	3.60	27.25	27.25	4.03
	57 (13.9)	36.63	36.63	2.39	34.90	34.90	2.64	33.11	33.11	2.92	31.23	31.23	3.24	29.28	29.28	3.60	27.21	27.21	4.03

COOLING INDOOR MODEL	CAPACITY	POWER	FURNACE MODEL
*CNPV*3717A**	1.00	1.00	
CAP**3614A**	0.95	0.99	
CAP**3617A**	0.96	1.00	
CAP**3619A**	0.96	1.00	
CAP**3621A**	0.96	1.00	
CAP**4221A**	0.97	1.01	
CAP**4224A**	0.97	1.01	
CAP**4817A**	0.99	1.03	
CAP**4821A**	0.98	1.03	
CAP**4823A**	0.98	1.03	
CAP**4824A**	0.98	1.03	
CNPF*3618A**	0.96	1.05	
CNPF*4818A**	0.98	1.03	
CNPH*3617A**	0.96	1.00	
CNPH*4221A**	0.97	1.01	
CNPH*4321A**	1.00	1.04	
CNPH*4821A**	0.99	1.03	
CNPH*6024A**	0.99	0.99	
CNPV*3617A**	0.96	1.00	
CNPV*3621A**	0.96	1.00	
CNPV*4217A**	0.98	1.03	
CNPV*4221A**	0.97	1.01	
CNPV*4324A**	1.00	1.00	
CNPV*4821A**	0.99	1.03	
CNPV*4824A**	0.99	1.03	
CSPH*3612A**	0.98	1.03	
CSPH*4212A**	0.99	1.03	
CSPH*4812A**	0.99	1.04	
FB4CNF036	0.96	0.96	
FB4CNF042	0.99	0.95	
FB4CNF048	0.99	0.95	
FE4AN(B,F)003	0.97	0.89	
FE4AN(B,F)005	0.99	0.92	
FE4ANB006	1.01	0.89	
FE4ANF002	0.96	0.96	
FE5ANB004	1.01	0.89	
FF1ENP036	0.96	1.05	
FF1ENP037	0.97	1.01	
FV4CN(B,F)003	0.97	0.89	

COOLING INDOOR MODEL	CAPACITY	POWER	FURNACE MODEL
FV4CN(B,F)005	0.99	0.92	
FV4CNB006	1.01	0.89	
FV4CNF002	0.96	0.96	
FX4DN(B,F)037	0.99	0.92	
FX4DN(B,F)043	0.99	0.92	
FX4DN(B,F)049	1.01	0.93	
FY5BNF036	0.97	0.97	
FY5BNF042	0.98	0.98	
CAP**3614A**	0.95	0.95	58CV(A,X)070–12
CAP**3617A**	0.95	0.95	58CV(A,X)070–12
CAP**4817A**	0.98	0.94	58CV(A,X)070–12
CNPH*3617A**	0.95	0.95	58CV(A,X)070–12
CNPH*4221A**	0.96	0.96	58CV(A,X)070–12
CNPH*4321A**	0.99	0.91	58CV(A,X)070–12
CNPH*4821A**	0.98	0.94	58CV(A,X)070–12
CNPV*3617A**	0.95	0.95	58CV(A,X)070–12
CNPV*3717A**	0.99	0.95	58CV(A,X)070–12
CNPV*4217A**	0.97	0.93	58CV(A,X)070–12
CSPH*3612A**	0.97	0.93	58CV(A,X)070–12
CSPH*4212A**	0.98	0.94	58CV(A,X)070–12
CSPH*4812A**	0.98	0.94	58CV(A,X)070–12
CAP**3617A**	0.96	0.92	58CV(A,X)090–16
CAP**3621A**	0.96	0.92	58CV(A,X)090–16
CAP**4221A**	0.97	0.93	58CV(A,X)090–16
CAP**4817A**	0.98	0.91	58CV(A,X)090–16
CAP**4821A**	0.98	0.90	58CV(A,X)090–16
CNPH*3617A**	0.95	0.92	58CV(A,X)090–16
CNPH*4221A**	0.97	0.93	58CV(A,X)090–16
CNPH*4321A**	0.99	0.91	58CV(A,X)090–16
CNPH*4821A**	0.98	0.90	58CV(A,X)090–16
CNPV*3617A**	0.95	0.95	58CV(A,X)090–16
CNPV*3621A**	0.95	0.92	58CV(A,X)090–16
CNPV*3717A**	0.99	0.91	58CV(A,X)090–16
CNPV*4217A**	0.97	0.93	58CV(A,X)090–16
CNPV*4221A**	0.97	0.93	58CV(A,X)090–16
CNPV*4821A**	0.98	0.90	58CV(A,X)090–16
CSPH*3612A**	0.98	0.90	58CV(A,X)090–16
CSPH*4212A**	0.98	0.91	58CV(A,X)090–16
CSPH*4812A**	0.98	0.91	58CV(A,X)090–16

COOLING INDOOR MODEL	CAPACITY	POWER	FURNACE MODEL
CAP**3621A**	0.96	0.92	58CV(A,X)110–20
CAP**4221A**	0.97	0.93	58CV(A,X)110–20
CAP**4224A**	0.97	0.93	58CV(A,X)110–20
CAP**4821A**	0.98	0.90	58CV(A,X)110–20
CAP**4824A**	0.98	0.90	58CV(A,X)110–20
CNPH*3617A**	0.95	0.92	58CV(A,X)110–20
CNPH*4221A**	0.97	0.93	58CV(A,X)110–20
CNPH*4321A**	0.99	0.92	58CV(A,X)110–20
CNPH*4821A**	0.98	0.91	58CV(A,X)110–20
CNPV*3621A**	0.96	0.92	58CV(A,X)110–20
CNPV*4221A**	0.97	0.93	58CV(A,X)110–20
CNPV*4324A**	0.99	0.92	58CV(A,X)110–20
CNPV*4821A**	0.98	0.91	58CV(A,X)110–20
CNPV*4824A**	0.98	0.91	58CV(A,X)110–20
CSPH*3612A**	0.98	0.90	58CV(A,X)110–20
CSPH*4212A**	0.98	0.91	58CV(A,X)110–20
CSPH*4812A**	0.99	0.91	58CV(A,X)110–20
CAP**4224A**	0.97	0.89	58CV(A,X)135–22
CAP**4824A**	0.98	0.90	58CV(A,X)135–22
CNPH*3617A**	0.95	0.92	58CV(A,X)135–22
CNPH*4221A**	0.97	0.93	58CV(A,X)135–22
CNPH*4321A**	0.99	0.92	58CV(A,X)135–22
CNPH*4821A**	0.98	0.91	58CV(A,X)135–22
CNPV*4324A**	0.99	0.92	58CV(A,X)135–22
CNPV*4824A**	0.98	0.91	58CV(A,X)135–22
CSPH*3612A**	0.98	0.90	58CV(A,X)135–22
CSPH*4212A**	0.98	0.91	58CV(A,X)135–22
CSPH*4812A**	0.99	0.91	58CV(A,X)135–22
CAP**4224A**	0.97	0.90	58CV(A,X)155–22
CAP**4824A**	0.98	0.91	58CV(A,X)155–22
CNPH*3617A**	0.96	0.92	58CV(A,X)155–22
CNPH*4221A**	0.97	0.90	58CV(A,X)155–22
CNPH*4321A**	0.99	0.92	58CV(A,X)155–22
CNPH*4821A**	0.98	0.91	58CV(A,X)155–22
CNPV*4324A**	0.99	0.92	58CV(A,X)155–22
CNPV*4824A**	0.98	0.91	58CV(A,X)155–22
CSPH*3612A**	0.98	0.91	58CV(A,X)155–22
CSPH*4212A**	0.99	0.91	58CV(A,X)155–22
CSPH*4812A**	0.99	0.91	58CV(A,X)155–22

DETAILED COOLING CAPACITIES# CONTINUED

24ANB636A30 Outdoor Section With CNPV*3717A**+TDR Indoor Section**

COOLING INDOOR MODEL	CAPACITY	POWER	FURNACE MODEL
CAP**3619A**	0.95	0.99	58HDV040– –12
CNPH*3617A**	0.95	0.99	58HDV040– –12
CNPH*4221A**	0.96	1.00	58HDV040– –12
CNPH*4321A**	0.99	0.99	58HDV040– –12
CNPV*3617A**	0.95	0.99	58HDV040– –12
CNPV*3621A**	0.95	0.99	58HDV040– –12
CNPV*3717A**	0.99	0.99	58HDV040– –12
CNPV*4217A**	0.97	0.97	58HDV040– –12
CNPV*4221A**	0.96	0.96	58HDV040– –12
CSPH*3612A**	0.97	0.97	58HDV040– –12
CSPH*4212A**	0.98	0.98	58HDV040– –12
CAP**3619A**	0.96	0.96	58HDV060– –12
CAP**4823A**	0.98	0.98	58HDV060– –12
CNPH*3617A**	0.95	0.99	58HDV060– –12
CNPH*4221A**	0.97	0.97	58HDV060– –12
CNPH*4321A**	1.00	1.00	58HDV060– –12
CNPV*3617A**	0.95	0.95	58HDV060– –12
CNPV*3621A**	0.96	0.96	58HDV060– –12
CNPV*3717A**	0.99	0.95	58HDV060– –12
CNPV*4217A**	0.98	0.98	58HDV060– –12
CNPV*4221A**	0.97	0.97	58HDV060– –12
CSPH*3612A**	0.98	0.98	58HDV060– –12
CSPH*4212A**	0.99	0.99	58HDV060– –12
CAP**4823A**	0.99	0.95	58HDV080– –20
CNPH*3617A**	0.97	0.97	58HDV080– –20
CNPH*4221A**	0.98	0.98	58HDV080– –20
CNPH*4321A**	1.01	0.97	58HDV080– –20
CNPV*3621A**	0.97	0.97	58HDV080– –20
CNPV*4221A**	0.98	0.98	58HDV080– –20
CNPV*4324A**	1.01	0.93	58HDV080– –20
CNPV*4324A**	1.01	0.93	58HDV080– –20
CSPH*3612A**	0.99	0.95	58HDV080– –20
CSPH*4212A**	1.00	0.96	58HDV080– –20
CAP**4224A**	0.98	0.94	58HDV100– –20
CNPH*3617A**	0.96	0.96	58HDV100– –20
CNPH*4221A**	0.98	0.98	58HDV100– –20
CNPH*4321A**	1.01	0.93	58HDV100– –20
CNPV*4324A**	1.01	0.93	58HDV100– –20
CNPV*4324A**	1.01	0.93	58HDV100– –20
CSPH*3612A**	0.99	0.95	58HDV100– –20
CSPH*4212A**	0.99	0.92	58HDV100– –20
CAP**3617A**	0.97	0.93	58MEB040–12
CAP**3621A**	0.97	0.93	58MEB040–12
CAP**4221A**	0.97	0.93	58MEB040–12
CAP**4817A**	0.99	0.91	58MEB040–12
CAP**4821A**	0.98	0.91	58MEB040–12
CNPH*3617A**	0.96	0.92	58MEB040–12
CNPH*4221A**	0.97	0.93	58MEB040–12
CNPH*4321A**	1.00	0.92	58MEB040–12
CNPH*4821A**	0.99	0.91	58MEB040–12
CNPV*3617A**	0.96	0.96	58MEB040–12
CNPV*3621A**	0.96	0.92	58MEB040–12
CNPV*3717A**	1.00	0.92	58MEB040–12
CNPV*4217A**	0.98	0.94	58MEB040–12
CNPV*4221A**	0.97	0.93	58MEB040–12
CNPV*4821A**	0.99	0.91	58MEB040–12
CSPH*3612A**	0.98	0.91	58MEB040–12
CSPH*4212A**	0.99	0.91	58MEB040–12
CSPH*4812A**	0.99	0.92	58MEB040–12

COOLING INDOOR MODEL	CAPACITY	POWER	FURNACE MODEL
CAP**3617A**	0.97	0.93	58MEC060–12
CAP**3621A**	0.97	0.93	58MEC060–12
CAP**4221A**	0.98	0.94	58MEC060–12
CAP**4817A**	0.99	0.92	58MEC060–12
CAP**4821A**	0.99	0.91	58MEC060–12
CNPH*3617A**	0.96	0.96	58MEC060–12
CNPH*4221A**	0.97	0.93	58MEC060–12
CNPH*4321A**	1.01	0.93	58MEC060–12
CNPH*4821A**	0.99	0.92	58MEC060–12
CNPV*3617A**	0.96	0.96	58MEC060–12
CNPV*3621A**	0.96	0.96	58MEC060–12
CNPV*3717A**	1.00	0.92	58MEC060–12
CNPV*4217A**	0.98	0.94	58MEC060–12
CNPV*4221A**	0.97	0.93	58MEC060–12
CNPV*4821A**	0.99	0.92	58MEC060–12
CSPH*3612A**	0.98	0.94	58MEC060–12
CSPH*4212A**	0.99	0.92	58MEC060–12
CSPH*4812A**	0.99	0.92	58MEC060–12
CAP**3617A**	0.96	0.92	58MEC080–12
CAP**3621A**	0.97	0.93	58MEC080–12
CAP**4221A**	0.97	0.93	58MEC080–12
CAP**4817A**	0.99	0.91	58MEC080–12
CAP**4821A**	0.98	0.91	58MEC080–12
CNPH*3617A**	0.96	0.92	58MEC080–12
CNPH*4221A**	0.97	0.93	58MEC080–12
CNPH*4321A**	1.00	0.92	58MEC080–12
CNPH*4821A**	0.99	0.91	58MEC080–12
CNPV*3617A**	0.96	0.96	58MEC080–12
CNPV*3621A**	0.96	0.92	58MEC080–12
CNPV*3717A**	0.99	0.92	58MEC080–12
CNPV*4217A**	0.98	0.94	58MEC080–12
CNPV*4221A**	0.97	0.93	58MEC080–12
CNPV*4821A**	0.99	0.91	58MEC080–12
CSPH*3612A**	0.98	0.91	58MEC080–12
CSPH*4212A**	0.99	0.91	58MEC080–12
CSPH*4812A**	0.99	0.92	58MEC080–12
CAP**3617A**	0.97	0.93	58MEC080–16
CAP**3621A**	0.97	0.93	58MEC080–16
CAP**4221A**	0.97	0.93	58MEC080–16
CAP**4817A**	0.99	0.92	58MEC080–16
CAP**4821A**	0.99	0.91	58MEC080–16
CNPH*3617A**	0.96	0.96	58MEC080–16
CNPH*4221A**	0.97	0.93	58MEC080–16
CNPH*4321A**	1.00	0.92	58MEC080–16
CNPH*4821A**	0.99	0.92	58MEC080–16
CNPV*3617A**	0.96	0.96	58MEC080–16
CNPV*3621A**	0.96	0.96	58MEC080–16
CNPV*3717A**	1.00	0.92	58MEC080–16
CNPV*4217A**	0.98	0.94	58MEC080–16
CNPV*4221A**	0.97	0.93	58MEC080–16
CNPV*4821A**	0.99	0.92	58MEC080–16
CSPH*3612A**	0.98	0.94	58MEC080–16
CSPH*4212A**	0.99	0.92	58MEC080–16
CSPH*4812A**	0.99	0.92	58MEC080–16
CAP**3621A**	0.97	0.89	58MEC100–20
CAP**4221A**	0.97	0.90	58MEC100–20
CAP**4224A**	0.97	0.90	58MEC100–20
CAP**4821A**	0.98	0.91	58MEC100–20
CAP**4824A**	0.98	0.91	58MEC100–20

COOLING INDOOR MODEL	CAPACITY	POWER	FURNACE MODEL
CNPH*3617A**	0.95	0.92	58MEC100–20
CNPH*4221A**	0.97	0.89	58MEC100–20
CNPH*4321A**	1.00	0.92	58MEC100–20
CNPH*4821A**	0.99	0.91	58MEC100–20
CNPV*3621A**	0.95	0.92	58MEC100–20
CNPV*4221A**	0.97	0.89	58MEC100–20
CNPV*4324A**	1.00	0.92	58MEC100–20
CNPV*4821A**	0.99	0.91	58MEC100–20
CNPV*4824A**	0.99	0.91	58MEC100–20
CSPH*3612A**	0.98	0.91	58MEC100–20
CSPH*4212A**	0.99	0.91	58MEC100–20
CSPH*4812A**	0.99	0.91	58MEC100–20
CAP**3617A**	0.96	0.92	58MV(B,C)060–14
CAP**3621A**	0.97	0.93	58MV(B,C)060–14
CAP**4221A**	0.97	0.93	58MV(B,C)060–14
CAP**4817A**	0.99	0.91	58MV(B,C)060–14
CAP**4821A**	0.98	0.94	58MV(B,C)060–14
CNPH*3617A**	0.96	0.96	58MV(B,C)060–14
CNPH*4221A**	0.97	0.93	58MV(B,C)060–14
CNPH*4321A**	0.99	0.92	58MV(B,C)060–14
CNPH*4821A**	0.98	0.91	58MV(B,C)060–14
CNPV*3617A**	0.96	0.96	58MV(B,C)060–14
CNPV*3621A**	0.96	0.96	58MV(B,C)060–14
CNPV*3717A**	0.99	0.92	58MV(B,C)060–14
CNPV*4217A**	0.98	0.94	58MV(B,C)060–14
CNPV*4221A**	0.97	0.93	58MV(B,C)060–14
CNPV*4821A**	0.98	0.91	58MV(B,C)060–14
CSPH*3612A**	0.98	0.94	58MV(B,C)060–14
CSPH*4212A**	0.99	0.91	58MV(B,C)060–14
CSPH*4812A**	0.99	0.91	58MV(B,C)060–14
CAP**3621A**	0.96	0.96	58MV(B,C)080–14
CAP**4221A**	0.97	0.93	58MV(B,C)080–14
CAP**4224A**	0.97	0.93	58MV(B,C)080–14
CAP**4821A**	0.98	0.94	58MV(B,C)080–14
CAP**4824A**	0.98	0.94	58MV(B,C)080–14
CNPH*3617A**	0.95	0.95	58MV(B,C)080–14
CNPH*4221A**	0.97	0.97	58MV(B,C)080–14
CNPH*4321A**	0.99	0.91	58MV(B,C)080–14
CNPH*4821A**	0.98	0.94	58MV(B,C)080–14
CNPV*3621A**	0.95	0.95	58MV(B,C)080–14
CNPV*4221A**	0.97	0.97	58MV(B,C)080–14
CNPV*4324A**	0.99	0.92	58MV(B,C)080–14
CNPV*4821A**	0.98	0.94	58MV(B,C)080–14
CNPV*4824A**	0.98	0.94	58MV(B,C)080–14
CSPH*3612A**	0.98	0.94	58MV(B,C)080–14
CSPH*4212A**	0.98	0.94	58MV(B,C)080–14
CSPH*4812A**	0.99	0.95	58MV(B,C)080–14
CAP**3621A**	0.96	0.92	58MV(B,C)080–20
CAP**4221A**	0.97	0.93	58MV(B,C)080–20
CAP**4224A**	0.97	0.93	58MV(B,C)080–20
CAP**4821A**	0.98	0.94	58MV(B,C)080–20
CAP**4824A**	0.98	0.94	58MV(B,C)080–20
CNPH*3617A**	0.95	0.95	58MV(B,C)080–20
CNPH*4221A**	0.97	0.93	58MV(B,C)080–20
CNPH*4321A**	0.99	0.91	58MV(B,C)080–20
CNPH*4821A**	0.98	0.90	58MV(B,C)080–20
CNPV*3621A**	0.95	0.95	58MV(B,C)080–20
CNPV*4221A**	0.97	0.93	58MV(B,C)080–20
CNPV*4324A**	0.99	0.91	58MV(B,C)080–20

DETAILED COOLING CAPACITIES# CONTINUED

24ANB636A30 Outdoor Section With CNPV*3717A**+TDR Indoor Section**

COOLING INDOOR MODEL	CAPACITY	POWER	FURNACE MODEL
CNPV*4821A**	0.98	0.90	58MV(B,C)080–20
CNPV*4824A**	0.98	0.90	58MV(B,C)080–20
CSPH*3612A**	0.98	0.94	58MV(B,C)080–20
CSPH*4212A**	0.98	0.94	58MV(B,C)080–20
CSPH*4812A**	0.98	0.91	58MV(B,C)080–20
CAP**3621A**	0.96	0.92	58MV(B,C)100–20
CAP**4221A**	0.97	0.93	58MV(B,C)100–20
CAP**4224A**	0.97	0.93	58MV(B,C)100–20
CAP**4821A**	0.98	0.94	58MV(B,C)100–20
CAP**4824A**	0.98	0.91	58MV(B,C)100–20
CNPH*3617A**	0.96	0.96	58MV(B,C)100–20
CNPH*4221A**	0.97	0.93	58MV(B,C)100–20
CNPH*4321A**	0.99	0.92	58MV(B,C)100–20
CNPH*4821A**	0.98	0.91	58MV(B,C)100–20
CNPV*3621A**	0.96	0.96	58MV(B,C)100–20
CNPV*4221A**	0.97	0.93	58MV(B,C)100–20
CNPV*4324A**	0.99	0.92	58MV(B,C)100–20
CNPV*4821A**	0.98	0.91	58MV(B,C)100–20
CNPV*4824A**	0.98	0.91	58MV(B,C)100–20
CSPH*3612A**	0.98	0.94	58MV(B,C)100–20
CSPH*4212A**	0.99	0.91	58MV(B,C)100–20
CSPH*4812A**	0.99	0.91	58MV(B,C)100–20
CAP**4224A**	0.97	0.89	58MV(B,C)120–20
CAP**4824A**	0.98	0.90	58MV(B,C)120–20
CNPH*3617A**	0.95	0.92	58MV(B,C)120–20
CNPH*4221A**	0.97	0.93	58MV(B,C)120–20
CNPH*4321A**	0.99	0.91	58MV(B,C)120–20
CNPH*4821A**	0.98	0.91	58MV(B,C)120–20
CNPV*4324A**	0.99	0.92	58MV(B,C)120–20
CNPV*4824A**	0.98	0.91	58MV(B,C)120–20
CSPH*3612A**	0.98	0.90	58MV(B,C)120–20
CSPH*4212A**	0.98	0.91	58MV(B,C)120–20
CSPH*4812A**	0.99	0.91	58MV(B,C)120–20
CAP**4224A**	0.96	0.92	58MVB040–14
CAP**4824A**	0.97	0.93	58MVB040–14
CNPH*3617A**	0.95	0.95	58MVB040–14
CNPH*4221A**	0.96	0.96	58MVB040–14
CNPH*4321A**	0.99	0.95	58MVB040–14
CNPH*4821A**	0.98	0.94	58MVB040–14
CNPV*4324A**	0.99	0.91	58MVB040–14
CNPV*4824A**	0.98	0.94	58MVB040–14
CSPH*3612A**	0.97	0.93	58MVB040–14
CSPH*4212A**	0.98	0.94	58MVB040–14
CSPH*4812A**	0.98	0.94	58MVB040–14
CAP**3614A**	0.95	0.99	58PH*045–08
CAP**3617A**	0.95	0.95	58PH*045–08
CAP**4817A**	0.98	0.98	58PH*045–08
CNPH*3617A**	0.95	0.99	58PH*045–08
CNPH*4221A**	0.97	0.97	58PH*045–08
CNPH*4321A**	0.99	0.99	58PH*045–08
CNPH*4821A**	0.98	0.98	58PH*045–08
CNPV*3617A**	0.95	0.99	58PH*045–08
CNPV*3717A**	0.99	0.99	58PH*045–08
CNPV*4217A**	0.97	1.01	58PH*045–08
CSPH*3612A**	0.98	0.98	58PH*045–08
CSPH*4212A**	0.98	0.98	58PH*045–08
CSPH*4812A**	0.99	0.99	58PH*045–08
CAP**3617A**	0.96	0.96	58PH*070–16
CAP**3621A**	0.96	0.96	58PH*070–16

COOLING INDOOR MODEL	CAPACITY	POWER	FURNACE MODEL
CAP**4221A**	0.97	0.97	58PH*070–16
CAP**4817A**	0.98	0.98	58PH*070–16
CAP**4821A**	0.98	0.98	58PH*070–16
CNPH*3617A**	0.95	0.95	58PH*070–16
CNPH*4221A**	0.97	0.97	58PH*070–16
CNPH*4321A**	0.99	0.95	58PH*070–16
CNPH*4821A**	0.98	0.94	58PH*070–16
CNPV*3617A**	0.95	0.95	58PH*070–16
CNPV*3621A**	0.95	0.95	58PH*070–16
CNPV*3717A**	0.99	0.95	58PH*070–16
CNPV*4217A**	0.97	0.97	58PH*070–16
CNPV*4221A**	0.97	0.97	58PH*070–16
CNPV*4821A**	0.98	0.94	58PH*070–16
CSPH*3612A**	0.98	0.98	58PH*070–16
CSPH*4212A**	0.98	0.94	58PH*070–16
CSPH*4812A**	0.99	0.95	58PH*070–16
CAP**3621A**	0.97	0.93	58PH*090–16
CAP**4221A**	0.97	0.90	58PH*090–16
CAP**4224A**	0.98	0.90	58PH*090–16
CAP**4821A**	0.99	0.91	58PH*090–16
CAP**4824A**	0.99	0.91	58PH*090–16
CNPH*3617A**	0.96	0.92	58PH*090–16
CNPH*4221A**	0.97	0.93	58PH*090–16
CNPH*4321A**	1.00	0.92	58PH*090–16
CNPH*4821A**	0.99	0.91	58PH*090–16
CNPH*6024A**	1.00	0.92	58PH*090–16
CNPV*3621A**	0.96	0.92	58PH*090–16
CNPV*4221A**	0.97	0.93	58PH*090–16
CNPV*4324A**	1.01	0.93	58PH*090–16
CNPV*4821A**	0.99	0.91	58PH*090–16
CNPV*4824A**	0.99	0.91	58PH*090–16
CSPH*3612A**	0.98	0.91	58PH*090–16
CSPH*4212A**	0.99	0.91	58PH*090–16
CSPH*4812A**	0.99	0.92	58PH*090–16
CAP**3621A**	0.97	0.93	58PH*110–20
CAP**4221A**	0.98	0.90	58PH*110–20
CAP**4224A**	0.98	0.90	58PH*110–20
CAP**4821A**	0.99	0.91	58PH*110–20
CAP**4824A**	0.99	0.92	58PH*110–20
CNPH*3617A**	0.96	0.92	58PH*110–20
CNPH*4221A**	0.98	0.90	58PH*110–20
CNPH*4321A**	1.01	0.93	58PH*110–20
CNPH*4821A**	0.99	0.92	58PH*110–20
CNPV*3621A**	0.97	0.93	58PH*110–20
CNPV*4221A**	0.98	0.90	58PH*110–20
CNPV*4324A**	1.01	0.93	58PH*110–20
CNPV*4821A**	0.99	0.92	58PH*110–20
CNPV*4824A**	0.99	0.92	58PH*110–20
CSPH*3612A**	0.99	0.91	58PH*110–20
CSPH*4212A**	0.99	0.92	58PH*110–20
CSPH*4812A**	1.00	0.92	58PH*110–20
CAP**3617A**	0.95	0.95	OVLAAB036098
CNPH*3617A**	0.95	0.95	OVLAAB036098
CNPH*4221A**	0.96	0.96	OVLAAB036098
CNPH*4321A**	0.98	0.94	OVLAAB036098
CNPV*3617A**	0.95	0.95	OVLAAB036098
CNPV*3717A**	0.98	0.94	OVLAAB036098
CNPV*4217A**	0.97	0.97	OVLAAB036098
CSPH*3612A**	0.97	0.97	OVLAAB036098

COOLING INDOOR MODEL	CAPACITY	POWER	FURNACE MODEL
CSPH*4212A**	0.98	0.98	OVLAAB036098
CAP**3621A**	0.97	0.93	OVLAAB048112
CAP**4221A**	0.97	0.93	OVLAAB048112
CNPH*3617A**	0.96	0.96	OVLAAB048112
CNPH*4221A**	0.97	0.97	OVLAAB048112
CNPH*4321A**	0.99	0.95	OVLAAB048112
CNPV*3621A**	0.96	0.96	OVLAAB048112
CNPV*4221A**	0.97	0.97	OVLAAB048112
CSPH*3612A**	0.98	0.94	OVLAAB048112
CSPH*4212A**	0.99	0.95	OVLAAB048112
CNPH*3617A**	0.98	0.98	OVLAAB060154
CNPH*4221A**	0.99	0.95	OVLAAB060154
CNPH*4321A**	1.02	0.94	OVLAAB060154
CSPH*3612A**	1.00	0.96	OVLAAB060154
CSPH*4212A**	1.01	0.93	OVLAAB060154
CAP**3617A**	0.95	0.95	OVMAAB036098
CNPH*3617A**	0.95	0.95	OVMAAB036098
CNPH*4221A**	0.96	0.96	OVMAAB036098
CNPH*4321A**	0.99	0.95	OVMAAB036098
CNPV*3617A**	0.95	0.95	OVMAAB036098
CNPV*3717A**	0.99	0.95	OVMAAB036098
CNPV*4217A**	0.97	0.97	OVMAAB036098
CSPH*3612A**	0.97	0.97	OVMAAB036098
CSPH*4212A**	0.98	0.98	OVMAAB036098
CAP**3617A**	0.96	0.92	OVMAAB042112
CNPH*3617A**	0.95	0.95	OVMAAB042112
CNPH*4221A**	0.97	0.93	OVMAAB042112
CNPH*4321A**	0.99	0.92	OVMAAB042112
CNPV*3617A**	0.95	0.95	OVMAAB042112
CNPV*3717A**	0.99	0.95	OVMAAB042112
CNPV*4217A**	0.97	0.93	OVMAAB042112
CSPH*3612A**	0.98	0.94	OVMAAB042112
CSPH*4212A**	0.98	0.94	OVMAAB042112

See notes on pg. 51

DETAILED COOLING CAPACITIES# CONTINUED

EVAPORATOR AIR		CONDENSER ENTERING AIR TEMPERATURES °F (°C)																	
		75 (23.9)			85 (29.4)			95 (35)			105 (40.6)			115 (46.1)			125 (51.7)		
CFM	EWB °F (°C)	Capacity MBtuh		Total Sys. KW**	Capacity MBtuh		Total Sys. KW**	Capacity MBtuh		Total Sys. KW**	Capacity MBtuh		Total Sys. KW**	Capacity MBtuh		Total Sys. KW**	Capacity MBtuh		Total Sys. KW**
		Total	Sens‡		Total	Sens‡		Total	Sens‡		Total	Sens‡		Total	Sens‡		Total	Sens‡	
24ANB642A**30 Outdoor Section With CNPV*4324A**+TDR Indoor Section																			
1225	72 (22.2)	49.34	24.70	2.66	47.47	24.08	3.01	45.41	23.40	3.42	43.15	22.67	3.88	40.71	21.89	4.39	38.06	21.06	4.98
	67 (19.4)	44.95	30.44	2.64	43.25	29.86	2.99	41.39	29.23	3.38	39.33	28.54	3.84	37.11	27.79	4.36	34.71	26.99	4.94
	63 (17.2)††	41.76	29.29	2.63	40.20	28.71	2.97	38.47	28.07	3.36	36.56	27.37	3.82	34.50	26.62	4.33	32.25	25.80	4.91
	62 (16.7)	41.12	36.11	2.63	39.63	35.56	2.97	38.01	34.93	3.36	36.38	36.38	3.82	34.75	34.75	4.33	32.94	32.94	4.92
	57 (13.9)	40.25	40.25	2.62	39.10	39.10	2.96	37.79	37.79	3.36	36.33	36.33	3.82	34.70	34.70	4.33	32.90	32.90	4.92
1400	72 (22.2)	50.16	25.99	2.73	48.18	25.36	3.08	46.03	24.68	3.49	43.68	23.95	3.95	41.13	23.16	4.47	38.39	22.32	5.06
	67 (19.4)	45.74	32.51	2.71	43.96	31.94	3.06	42.00	31.30	3.46	39.87	30.61	3.92	37.56	29.85	4.43	35.08	29.04	5.02
	63 (17.2)††	42.55	31.23	2.70	40.90	30.64	3.04	39.08	30.00	3.44	37.10	29.29	3.89	34.95	28.52	4.41	32.65	27.69	4.99
	62 (16.7)	42.11	38.86	2.70	40.72	40.72	3.04	39.30	39.30	3.44	37.71	37.71	3.90	35.95	35.95	4.42	34.01	34.01	5.01
	57 (13.9)	41.92	41.92	2.70	40.66	40.66	3.04	39.24	39.24	3.44	37.65	37.65	3.90	35.90	35.90	4.42	33.97	33.97	5.01
1575	72 (22.2)	50.74	27.21	2.80	48.70	26.58	3.16	46.46	25.90	3.56	44.03	25.16	4.03	41.41	24.38	4.55	38.60	23.54	5.14
	67 (19.4)	46.32	34.50	2.78	44.48	33.92	3.13	42.46	33.29	3.53	40.26	32.59	3.99	37.89	31.82	4.51	35.38	30.98	5.10
	63 (17.2)††	43.12	33.07	2.77	41.42	32.49	3.11	39.54	31.84	3.51	37.50	31.12	3.97	35.30	30.34	4.48	32.96	29.47	5.07
	62 (16.7)	43.35	43.35	2.77	42.00	42.00	3.11	40.47	40.47	3.52	38.78	38.78	3.98	36.91	36.91	4.50	34.86	34.86	5.09
	57 (13.9)	43.29	43.29	2.77	41.94	41.94	3.11	40.42	40.42	3.52	38.73	38.73	3.98	36.87	36.87	4.50	34.82	34.82	5.09

COOLING INDOOR MODEL	CAPACITY	POWER	FURNACE MODEL
*CNPV*4324A**	1.00	1.00	
CAP**4221A**	0.96	1.01	
CAP**4224A**	0.96	1.01	
CAP**4817A**	0.99	0.99	
CAP**4821A**	0.98	0.98	
CAP**4823A**	0.98	0.98	
CAP**4824A**	0.98	0.98	
CAP**6021A**	1.00	1.00	
CAP**6024A**	1.00	1.00	
CAP**6025A**	1.00	1.00	
CNPF*4818A**	0.98	0.98	
CNPH*4221A**	0.96	0.96	
CNPH*4321A**	1.00	1.00	
CNPH*4821A**	0.98	0.98	
CNPH*6024A**	0.99	0.99	
CNPV*4217A**	0.98	0.98	
CNPV*4221A**	0.96	0.96	
CNPV*4821A**	0.98	0.98	
CNPV*4824A**	0.98	0.98	
CNPV*6024A**	0.99	0.99	
CSPH*4212A**	0.99	0.99	
CSPH*4812A**	0.99	0.99	
CSPH*6012A**	1.00	1.00	
FB4CNF042	0.99	0.95	
FB4CNF048	0.99	0.91	
FB4CNF060	1.00	0.92	
FE4AN(B,F)003	0.95	0.88	
FE4AN(B,F)005	0.99	0.91	
FE4ANB006	1.00	0.92	
FE5ANB004	1.00	0.92	
FV4CN(B,F)003	0.95	0.88	
FV4CN(B,F)005	0.99	0.91	
FV4CNB006	1.00	0.92	
FX4DN(B,F)043	0.99	0.95	
FX4DN(B,F)049	1.00	0.92	
FX4DN(B,F)061	1.00	0.89	
FY5BNF042	0.98	0.94	
FY5BNF048	1.00	0.96	
CAP**4817A**	0.98	0.94	58CV(A,X)070–12

COOLING INDOOR MODEL	CAPACITY	POWER	FURNACE MODEL
CNPH*4221A**	0.95	0.91	58CV(A,X)070–12
CNPH*4321A**	0.98	0.94	58CV(A,X)070–12
CNPH*4821A**	0.96	0.93	58CV(A,X)070–12
CNPH*6024A**	0.98	0.90	58CV(A,X)070–12
CNPV*4217A**	0.96	0.93	58CV(A,X)070–12
CSPH*4212A**	0.98	0.94	58CV(A,X)070–12
CSPH*4812A**	0.98	0.94	58CV(A,X)070–12
CSPH*6012A**	0.99	0.91	58CV(A,X)070–12
CAP**4221A**	0.95	0.91	58CV(A,X)090–16
CAP**4817A**	0.98	0.90	58CV(A,X)090–16
CAP**4821A**	0.96	0.89	58CV(A,X)090–16
CAP**6021A**	0.99	0.91	58CV(A,X)090–16
CNPH*4221A**	0.95	0.91	58CV(A,X)090–16
CNPH*4321A**	0.99	0.91	58CV(A,X)090–16
CNPH*4821A**	0.98	0.90	58CV(A,X)090–16
CNPH*6024A**	0.99	0.91	58CV(A,X)090–16
CNPV*4217A**	0.96	0.93	58CV(A,X)090–16
CNPV*4221A**	0.95	0.91	58CV(A,X)090–16
CNPV*4821A**	0.98	0.90	58CV(A,X)090–16
CSPH*4212A**	0.98	0.90	58CV(A,X)090–16
CSPH*4812A**	0.98	0.90	58CV(A,X)090–16
CSPH*6012A**	0.99	0.91	58CV(A,X)090–16
CAP**4221A**	0.95	0.88	58CV(A,X)110–20
CAP**4224A**	0.95	0.88	58CV(A,X)110–20
CAP**4821A**	0.98	0.90	58CV(A,X)110–20
CAP**4824A**	0.98	0.90	58CV(A,X)110–20
CAP**6021A**	0.99	0.91	58CV(A,X)110–20
CAP**6024A**	0.99	0.91	58CV(A,X)110–20
CNPH*4221A**	0.95	0.91	58CV(A,X)110–20
CNPH*4321A**	0.99	0.91	58CV(A,X)110–20
CNPH*4821A**	0.98	0.90	58CV(A,X)110–20
CNPH*6024A**	0.99	0.91	58CV(A,X)110–20
CNPV*4221A**	0.95	0.91	58CV(A,X)110–20
CNPV*4324A**	0.99	0.91	58CV(A,X)110–20
CNPV*4821A**	0.98	0.90	58CV(A,X)110–20
CNPV*4824A**	0.98	0.90	58CV(A,X)110–20
CNPV*6024A**	0.99	0.91	58CV(A,X)110–20
CSPH*4212A**	0.98	0.90	58CV(A,X)110–20
CSPH*4812A**	0.98	0.90	58CV(A,X)110–20

COOLING INDOOR MODEL	CAPACITY	POWER	FURNACE MODEL
CSPH*6012A**	0.99	0.91	58CV(A,X)110–20
CAP**4224A**	0.96	0.89	58CV(A,X)135–22
CAP**4824A**	0.98	0.90	58CV(A,X)135–22
CAP**6024A**	0.99	0.91	58CV(A,X)135–22
CNPH*4221A**	0.96	0.89	58CV(A,X)135–22
CNPH*4321A**	0.99	0.91	58CV(A,X)135–22
CNPH*4821A**	0.98	0.90	58CV(A,X)135–22
CNPH*6024A**	0.99	0.91	58CV(A,X)135–22
CNPV*4324A**	0.99	0.91	58CV(A,X)135–22
CNPV*4824A**	0.98	0.90	58CV(A,X)135–22
CNPV*6024A**	0.99	0.91	58CV(A,X)135–22
CSPH*4212A**	0.98	0.90	58CV(A,X)135–22
CSPH*4812A**	0.99	0.91	58CV(A,X)135–22
CSPH*6012A**	0.99	0.91	58CV(A,X)135–22
CAP**4224A**	0.95	0.88	58CV(A,X)155–22
CAP**4824A**	0.98	0.90	58CV(A,X)155–22
CAP**6024A**	0.99	0.91	58CV(A,X)155–22
CNPH*4221A**	0.96	0.89	58CV(A,X)155–22
CNPH*4321A**	0.99	0.91	58CV(A,X)155–22
CNPH*4821A**	0.98	0.90	58CV(A,X)155–22
CNPH*6024A**	0.99	0.91	58CV(A,X)155–22
CNPV*4324A**	0.99	0.91	58CV(A,X)155–22
CNPV*4824A**	0.98	0.90	58CV(A,X)155–22
CNPV*6024A**	0.99	0.91	58CV(A,X)155–22
CSPH*4212A**	0.98	0.90	58CV(A,X)155–22
CSPH*4812A**	0.98	0.90	58CV(A,X)155–22
CSPH*6012A**	0.99	0.91	58CV(A,X)155–22
CNPH*4221A**	0.95	0.95	58HDV060––12
CNPH*4321A**	0.99	0.99	58HDV060––12
CNPH*4821A**	0.98	0.98	58HDV060––12
CNPV*4217A**	0.96	0.96	58HDV060––12
CNPV*4221A**	0.95	0.95	58HDV060––12
CNPV*4821A**	0.98	0.98	58HDV060––12
CSPH*4212A**	0.98	0.98	58HDV060––12
CSPH*4812A**	0.98	0.98	58HDV060––12
CAP**4823A**	0.98	0.94	58HDV080––20
CAP**6025A**	1.00	0.92	58HDV080––20
CNPH*4221A**	0.96	0.96	58HDV080––20
CNPH*4321A**	1.00	0.96	58HDV080––20

DETAILED COOLING CAPACITIES# CONTINUED

24ANB642A30 Outdoor Section With CNPV*4324A**+TDR Indoor Section**

COOLING INDOOR MODEL	CAPACITY	POWER	FURNACE MODEL
CNPH*4821A**	0.99	0.95	58HDV080– –20
CNPV*4221A**	0.96	0.93	58HDV080– –20
CNPV*4324A**	1.00	0.92	58HDV080– –20
CNPV*4821A**	0.99	0.91	58HDV080– –20
CNPV*4824A**	0.99	0.91	58HDV080– –20
CSPH*4212A**	0.99	0.95	58HDV080– –20
CSPH*4812A**	0.99	0.95	58HDV080– –20
CAP**4224A**	0.96	0.93	58HDV100– –20
CAP**4824A**	0.98	0.94	58HDV100– –20
CAP**6025A**	0.99	0.91	58HDV100– –20
CNPH*4221A**	0.96	0.93	58HDV100– –20
CNPH*4321A**	0.99	0.91	58HDV100– –20
CNPH*4821A**	0.98	0.94	58HDV100– –20
CNPV*4324A**	0.99	0.91	58HDV100– –20
CNPV*4324A**	0.99	0.91	58HDV100– –20
CNPV*4824A**	0.98	0.94	58HDV100– –20
CNPV*4824A**	0.98	0.90	58HDV100– –20
CSPH*4212A**	0.98	0.90	58HDV100– –20
CSPH*4812A**	0.99	0.91	58HDV100– –20
CAP**4221A**	0.96	0.93	58MEB040–12
CAP**4817A**	0.99	0.91	58MEB040–12
CAP**4821A**	0.98	0.94	58MEB040–12
CAP**6021A**	1.00	0.92	58MEB040–12
CNPH*4221A**	0.96	0.93	58MEB040–12
CNPH*4321A**	1.00	0.92	58MEB040–12
CNPH*4821A**	0.98	0.90	58MEB040–12
CNPH*6024A**	1.00	0.92	58MEB040–12
CNPV*4217A**	0.96	0.93	58MEB040–12
CNPV*4221A**	0.96	0.93	58MEB040–12
CNPV*4821A**	0.98	0.90	58MEB040–12
CSPH*4212A**	0.99	0.91	58MEB040–12
CSPH*4812A**	0.99	0.91	58MEB040–12
CSPH*6012A**	1.00	0.92	58MEB040–12
CAP**4221A**	0.96	0.93	58MEC060–12
CAP**4817A**	0.99	0.95	58MEC060–12
CAP**4821A**	0.98	0.94	58MEC060–12
CAP**6021A**	0.99	0.91	58MEC060–12
CNPH*4221A**	0.96	0.93	58MEC060–12
CNPH*4321A**	0.99	0.91	58MEC060–12
CNPH*4821A**	0.98	0.94	58MEC060–12
CNPH*6024A**	1.00	0.92	58MEC060–12
CNPV*4217A**	0.96	0.93	58MEC060–12
CNPV*4221A**	0.96	0.93	58MEC060–12
CNPV*4821A**	0.98	0.94	58MEC060–12
CSPH*4212A**	0.99	0.95	58MEC060–12
CSPH*4812A**	0.99	0.91	58MEC060–12
CSPH*6012A**	1.00	0.92	58MEC060–12
CAP**4221A**	0.96	0.93	58MEC080–12
CAP**4817A**	0.99	0.91	58MEC080–12
CAP**4821A**	0.98	0.94	58MEC080–12
CAP**6021A**	0.99	0.91	58MEC080–12
CNPH*4221A**	0.96	0.93	58MEC080–12
CNPH*4321A**	0.99	0.91	58MEC080–12
CNPH*4821A**	0.98	0.90	58MEC080–12
CNPH*6024A**	1.00	0.92	58MEC080–12
CNPV*4217A**	0.96	0.93	58MEC080–12
CNPV*4221A**	0.96	0.93	58MEC080–12
CNPV*4821A**	0.98	0.90	58MEC080–12
CSPH*4212A**	0.99	0.91	58MEC080–12

COOLING INDOOR MODEL	CAPACITY	POWER	FURNACE MODEL
CSPH*4812A**	0.99	0.91	58MEC080–12
CSPH*6012A**	1.00	0.92	58MEC080–12
CAP**4221A**	0.95	0.91	58MEC080–16
CAP**4817A**	0.98	0.90	58MEC080–16
CAP**4821A**	0.98	0.94	58MEC080–16
CAP**6021A**	0.99	0.91	58MEC080–16
CNPH*4221A**	0.95	0.91	58MEC080–16
CNPH*4321A**	0.99	0.91	58MEC080–16
CNPH*4821A**	0.98	0.90	58MEC080–16
CNPH*6024A**	0.99	0.91	58MEC080–16
CNPV*4217A**	0.96	0.93	58MEC080–16
CNPV*4221A**	0.95	0.91	58MEC080–16
CNPV*4821A**	0.98	0.90	58MEC080–16
CSPH*4212A**	0.98	0.90	58MEC080–16
CSPH*4812A**	0.98	0.90	58MEC080–16
CSPH*6012A**	1.00	0.92	58MEC080–16
CAP**4221A**	0.96	0.89	58MEC100–20
CAP**4224A**	0.96	0.89	58MEC100–20
CAP**4821A**	0.98	0.90	58MEC100–20
CAP**4824A**	0.98	0.90	58MEC100–20
CAP**6021A**	0.99	0.91	58MEC100–20
CAP**6024A**	1.00	0.92	58MEC100–20
CNPH*4221A**	0.96	0.89	58MEC100–20
CNPH*4321A**	0.99	0.91	58MEC100–20
CNPH*4821A**	0.98	0.90	58MEC100–20
CNPH*6024A**	1.00	0.92	58MEC100–20
CNPV*4221A**	0.96	0.89	58MEC100–20
CNPV*4324A**	1.00	0.92	58MEC100–20
CNPV*4821A**	0.98	0.90	58MEC100–20
CNPV*4824A**	0.98	0.90	58MEC100–20
CNPV*6024A**	1.00	0.92	58MEC100–20
CSPH*4212A**	0.98	0.90	58MEC100–20
CSPH*4812A**	0.99	0.91	58MEC100–20
CSPH*6012A**	1.00	0.92	58MEC100–20
CAP**4224A**	0.96	0.89	58MEC120–20
CAP**4824A**	0.98	0.90	58MEC120–20
CAP**6024A**	1.00	0.92	58MEC120–20
CNPH*4221A**	0.96	0.89	58MEC120–20
CNPH*4321A**	1.00	0.92	58MEC120–20
CNPH*4821A**	0.99	0.91	58MEC120–20
CNPH*6024A**	1.00	0.92	58MEC120–20
CNPV*4324A**	1.00	0.92	58MEC120–20
CNPV*4824A**	0.99	0.91	58MEC120–20
CNPV*6024A**	1.00	0.92	58MEC120–20
CSPH*4212A**	0.99	0.91	58MEC120–20
CSPH*4812A**	0.99	0.91	58MEC120–20
CSPH*6012A**	1.00	0.92	58MEC120–20
CAP**4221A**	0.96	0.93	58MV(B,C)060–14
CAP**4817A**	0.98	0.94	58MV(B,C)060–14
CAP**4821A**	0.98	0.94	58MV(B,C)060–14
CAP**6021A**	0.99	0.91	58MV(B,C)060–14
CNPH*4221A**	0.96	0.93	58MV(B,C)060–14
CNPH*4321A**	0.99	0.91	58MV(B,C)060–14
CNPH*4821A**	0.98	0.90	58MV(B,C)060–14
CNPH*6024A**	0.99	0.91	58MV(B,C)060–14
CNPV*4217A**	0.96	0.93	58MV(B,C)060–14
CNPV*4221A**	0.96	0.93	58MV(B,C)060–14
CNPV*4821A**	0.98	0.90	58MV(B,C)060–14
CSPH*4212A**	0.98	0.94	58MV(B,C)060–14

COOLING INDOOR MODEL	CAPACITY	POWER	FURNACE MODEL
CSPH*4812A**	0.99	0.91	58MV(B,C)060–14
CSPH*6012A**	1.00	0.92	58MV(B,C)060–14
CAP**4221A**	0.95	0.91	58MV(B,C)080–14
CAP**4224A**	0.95	0.91	58MV(B,C)080–14
CAP**4821A**	0.96	0.93	58MV(B,C)080–14
CAP**4824A**	0.96	0.93	58MV(B,C)080–14
CAP**6021A**	0.98	0.94	58MV(B,C)080–14
CAP**6024A**	0.99	0.95	58MV(B,C)080–14
CNPH*4221A**	0.95	0.95	58MV(B,C)080–14
CNPH*4321A**	0.99	0.95	58MV(B,C)080–14
CNPH*4821A**	0.98	0.94	58MV(B,C)080–14
CNPH*6024A**	0.99	0.91	58MV(B,C)080–14
CNPV*4221A**	0.95	0.95	58MV(B,C)080–14
CNPV*4324A**	0.99	0.91	58MV(B,C)080–14
CNPV*4821A**	0.98	0.94	58MV(B,C)080–14
CNPV*4824A**	0.98	0.94	58MV(B,C)080–14
CNPV*6024A**	0.99	0.91	58MV(B,C)080–14
CSPH*4212A**	0.98	0.94	58MV(B,C)080–14
CSPH*4812A**	0.98	0.94	58MV(B,C)080–14
CSPH*6012A**	0.99	0.91	58MV(B,C)080–14
CAP**4221A**	0.95	0.91	58MV(B,C)080–20
CAP**4224A**	0.95	0.91	58MV(B,C)080–20
CAP**4821A**	0.96	0.93	58MV(B,C)080–20
CAP**4824A**	0.96	0.93	58MV(B,C)080–20
CAP**6021A**	0.99	0.91	58MV(B,C)080–20
CAP**6024A**	0.99	0.91	58MV(B,C)080–20
CNPH*4221A**	0.95	0.91	58MV(B,C)080–20
CNPH*4321A**	0.99	0.91	58MV(B,C)080–20
CNPH*4821A**	0.98	0.94	58MV(B,C)080–20
CNPH*6024A**	0.99	0.91	58MV(B,C)080–20
CNPV*4221A**	0.95	0.91	58MV(B,C)080–20
CNPV*4324A**	0.99	0.91	58MV(B,C)080–20
CNPV*4821A**	0.98	0.94	58MV(B,C)080–20
CNPV*4824A**	0.98	0.94	58MV(B,C)080–20
CNPV*6024A**	0.99	0.91	58MV(B,C)080–20
CSPH*4212A**	0.98	0.94	58MV(B,C)080–20
CSPH*4812A**	0.98	0.94	58MV(B,C)080–20
CSPH*6012A**	0.99	0.91	58MV(B,C)080–20
CAP**4221A**	0.95	0.91	58MV(B,C)100–20
CAP**4224A**	0.95	0.91	58MV(B,C)100–20
CAP**4821A**	0.96	0.93	58MV(B,C)100–20
CAP**4824A**	0.96	0.93	58MV(B,C)100–20
CAP**6021A**	0.98	0.90	58MV(B,C)100–20
CAP**6024A**	0.98	0.90	58MV(B,C)100–20
CNPH*4221A**	0.95	0.91	58MV(B,C)100–20
CNPH*4321A**	0.98	0.90	58MV(B,C)100–20
CNPH*4821A**	0.96	0.89	58MV(B,C)100–20
CNPH*6024A**	0.98	0.90	58MV(B,C)100–20
CNPV*4221A**	0.95	0.91	58MV(B,C)100–20
CNPV*4324A**	0.98	0.90	58MV(B,C)100–20
CNPV*4821A**	0.96	0.89	58MV(B,C)100–20
CNPV*4824A**	0.96	0.89	58MV(B,C)100–20
CNPV*6024A**	0.98	0.90	58MV(B,C)100–20
CSPH*4212A**	0.96	0.93	58MV(B,C)100–20
CSPH*4812A**	0.98	0.90	58MV(B,C)100–20
CSPH*6012A**	0.99	0.91	58MV(B,C)100–20
CAP**4224A**	0.95	0.88	58MV(B,C)120–20
CAP**4824A**	0.96	0.89	58MV(B,C)120–20
CAP**6024A**	0.99	0.91	58MV(B,C)120–20

DETAILED COOLING CAPACITIES# CONTINUED

24ANB642A30 Outdoor Section With CNPV*4324A**+TDR Indoor Section**

COOLING INDOOR MODEL	CAPACITY	POWER	FURNACE MODEL
CNPH*4221A**	0.95	0.91	58MV(B,C)120–20
CNPH*4321A**	0.99	0.91	58MV(B,C)120–20
CNPH*4821A**	0.98	0.90	58MV(B,C)120–20
CNPH*6024A**	0.99	0.91	58MV(B,C)120–20
CNPV*4324A**	0.99	0.91	58MV(B,C)120–20
CNPV*4824A**	0.98	0.90	58MV(B,C)120–20
CNPV*6024A**	0.99	0.91	58MV(B,C)120–20
CSPH*4212A**	0.98	0.90	58MV(B,C)120–20
CSPH*4812A**	0.98	0.90	58MV(B,C)120–20
CSPH*6012A**	0.99	0.91	58MV(B,C)120–20
CAP**4224A**	0.95	0.91	58MVB040–14
CAP**4824A**	0.96	0.93	58MVB040–14
CAP**6024A**	0.98	0.90	58MVB040–14
CNPH*4221A**	0.95	0.91	58MVB040–14
CNPH*4321A**	0.98	0.94	58MVB040–14
CNPH*4821A**	0.96	0.93	58MVB040–14
CNPH*6024A**	0.98	0.90	58MVB040–14
CNPV*4324A**	0.98	0.90	58MVB040–14
CNPV*4824A**	0.96	0.93	58MVB040–14
CNPV*6024A**	0.98	0.90	58MVB040–14
CSPH*4212A**	0.96	0.93	58MVB040–14
CSPH*4812A**	0.98	0.94	58MVB040–14
CSPH*6012A**	0.99	0.91	58MVB040–14
CAP**4221A**	0.95	0.95	58PH*070–16
CAP**4817A**	0.98	0.98	58PH*070–16
CAP**4821A**	0.96	0.96	58PH*070–16
CAP**6021A**	0.99	0.95	58PH*070–16
CNPH*4221A**	0.95	0.95	58PH*070–16
CNPH*4321A**	0.99	0.95	58PH*070–16
CNPH*4821A**	0.98	0.98	58PH*070–16
CNPH*6024A**	0.99	0.95	58PH*070–16
CNPV*4217A**	0.96	0.96	58PH*070–16
CNPV*4221A**	0.95	0.95	58PH*070–16
CNPV*4821A**	0.98	0.98	58PH*070–16
CSPH*4212A**	0.98	0.98	58PH*070–16
CSPH*4812A**	0.98	0.94	58PH*070–16
CSPH*6012A**	0.99	0.95	58PH*070–16
CAP**4221A**	0.96	0.89	58PH*090–16
CAP**4224A**	0.96	0.89	58PH*090–16
CAP**4821A**	0.98	0.90	58PH*090–16
CAP**4824A**	0.98	0.90	58PH*090–16
CAP**6021A**	0.99	0.91	58PH*090–16
CAP**6024A**	0.99	0.91	58PH*090–16
CNPH*4221A**	0.96	0.93	58PH*090–16
CNPH*4321A**	0.99	0.91	58PH*090–16
CNPH*4821A**	0.98	0.90	58PH*090–16
CNPH*6024A**	0.99	0.91	58PH*090–16
CNPV*4221A**	0.96	0.93	58PH*090–16
CNPV*4324A**	0.99	0.91	58PH*090–16
CNPV*4821A**	0.98	0.90	58PH*090–16
CNPV*4824A**	0.98	0.90	58PH*090–16
CNPV*6024A**	0.99	0.91	58PH*090–16
CSPH*4212A**	0.98	0.90	58PH*090–16
CSPH*4812A**	0.99	0.91	58PH*090–16
CSPH*6012A**	1.00	0.92	58PH*090–16
CAP**4221A**	0.96	0.89	58PH*110–20
CAP**4224A**	0.96	0.89	58PH*110–20
CAP**4821A**	0.98	0.90	58PH*110–20
CAP**4824A**	0.98	0.90	58PH*110–20

COOLING INDOOR MODEL	CAPACITY	POWER	FURNACE MODEL
CAP**6021A**	0.99	0.91	58PH*110–20
CAP**6024A**	0.99	0.91	58PH*110–20
CNPH*4221A**	0.96	0.89	58PH*110–20
CNPH*4321A**	0.99	0.91	58PH*110–20
CNPH*4821A**	0.98	0.90	58PH*110–20
CNPH*6024A**	1.00	0.92	58PH*110–20
CNPV*4221A**	0.96	0.89	58PH*110–20
CNPV*4324A**	1.00	0.92	58PH*110–20
CNPV*4821A**	0.98	0.90	58PH*110–20
CNPV*4824A**	0.98	0.90	58PH*110–20
CNPV*6024A**	1.00	0.92	58PH*110–20
CSPH*4212A**	0.98	0.90	58PH*110–20
CSPH*4812A**	0.99	0.91	58PH*110–20
CSPH*6012A**	1.00	0.92	58PH*110–20
CAP**4224A**	0.96	0.89	58PH*135–20
CAP**4824A**	0.98	0.90	58PH*135–20
CAP**6024A**	0.99	0.91	58PH*135–20
CNPH*4221A**	0.95	0.91	58PH*135–20
CNPH*4321A**	0.99	0.91	58PH*135–20
CNPH*4821A**	0.98	0.90	58PH*135–20
CNPH*6024A**	1.00	0.92	58PH*135–20
CNPV*4324A**	1.00	0.92	58PH*135–20
CNPV*4824A**	0.98	0.90	58PH*135–20
CNPV*6024A**	1.00	0.92	58PH*135–20
CSPH*4212A**	0.98	0.90	58PH*135–20
CSPH*4812A**	0.99	0.91	58PH*135–20
CSPH*6012A**	1.00	0.92	58PH*135–20
CAP**4221A**	0.95	0.95	OVLAAB048112
CAP**4821A**	0.98	0.94	OVLAAB048112
CNPH*4221A**	0.96	0.96	OVLAAB048112
CNPH*4321A**	0.99	0.95	OVLAAB048112
CNPH*4821A**	0.98	0.94	OVLAAB048112
CNPV*4221A**	0.96	0.96	OVLAAB048112
CNPV*4821A**	0.98	0.94	OVLAAB048112
CSPH*4212A**	0.98	0.94	OVLAAB048112
CSPH*4812A**	0.99	0.95	OVLAAB048112
CNPH*4221A**	0.98	0.94	OVLAAB060154
CNPH*4321A**	1.00	0.92	OVLAAB060154
CNPH*4821A**	1.00	0.92	OVLAAB060154
CSPH*4212A**	1.00	0.92	OVLAAB060154
CSPH*4812A**	1.00	0.92	OVLAAB060154
CAP**4817A**	0.98	0.94	OVMAAB042112
CNPH*4221A**	0.95	0.91	OVMAAB042112
CNPH*4321A**	0.99	0.91	OVMAAB042112
CNPH*4821A**	0.98	0.94	OVMAAB042112
CNPV*4217A**	0.96	0.93	OVMAAB042112
CSPH*4212A**	0.98	0.94	OVMAAB042112
CSPH*4812A**	0.98	0.94	OVMAAB042112

See notes on pg. 51

DETAILED COOLING CAPACITIES# CONTINUED

EVAPORATOR AIR		CONDENSER ENTERING AIR TEMPERATURES °F (°C)																	
		75 (23.9)			85 (29.4)			95 (35)			105 (40.6)			115 (46.1)			125 (51.7)		
CFM	EWB °F (°C)	Capacity MBtuh		Total Sys. KW**	Capacity MBtuh		Total Sys. KW**	Capacity MBtuh		Total Sys. KW**	Capacity MBtuh		Total Sys. KW**	Capacity MBtuh		Total Sys. KW**	Capacity MBtuh		Total Sys. KW**
		Total	Sens‡		Total	Sens‡		Total	Sens‡		Total	Sens‡		Total	Sens‡		Total	Sens‡	
24ANB648A**30 Outdoor Section With CNPV*6124A** +TDR Indoor Section																			
1400	72 (22.2)	56.26	27.99	2.63	53.43	27.01	3.06	50.50	26.01	3.49	47.48	24.98	3.94	44.30	23.92	4.41	40.93	22.81	4.90
	67 (19.4)	50.89	34.43	2.79	48.38	33.47	3.18	45.78	32.48	3.58	43.08	31.47	4.00	40.25	30.42	4.44	37.23	29.31	4.92
	63 (17.2)††	47.07	33.02	2.89	44.78	32.08	3.26	42.40	31.11	3.64	39.93	30.12	4.03	37.32	29.07	4.46	34.55	27.98	4.92
	62 (16.7)	46.35	40.80	2.90	44.17	39.83	3.27	41.98	41.83	3.64	39.98	39.98	4.03	37.84	37.84	4.45	35.52	35.52	4.92
	57 (13.9)	45.55	45.55	2.92	43.76	43.76	3.27	41.89	41.89	3.64	39.91	39.91	4.03	37.78	37.78	4.45	35.47	35.47	4.92
1600	72 (22.2)	57.28	29.51	2.66	54.30	28.50	3.10	51.24	27.48	3.54	48.08	26.43	4.00	44.78	25.35	4.47	41.29	24.22	4.97
	67 (19.4)	51.86	36.85	2.83	49.21	35.85	3.23	46.50	34.85	3.64	43.69	33.81	4.06	40.75	32.72	4.51	37.65	31.58	4.99
	63 (17.2)††	47.99	35.27	2.94	45.57	34.29	3.31	43.10	33.30	3.70	40.52	32.28	4.10	37.82	31.20	4.53	34.97	30.07	5.00
	62 (16.7)	47.61	47.41	2.94	45.63	45.63	3.31	43.61	43.61	3.69	41.47	41.47	4.09	39.16	39.16	4.52	36.67	36.67	5.00
	57 (13.9)	47.50	47.50	2.94	45.56	45.56	3.31	43.54	43.54	3.69	41.41	41.41	4.09	39.11	39.11	4.52	36.63	36.63	5.00
1800	72 (22.2)	58.02	30.95	2.70	54.93	29.93	3.15	51.76	28.88	3.60	48.49	27.82	4.06	45.10	26.72	4.54	41.51	25.58	5.05
	67 (19.4)	52.58	39.16	2.87	49.84	38.15	3.28	47.04	37.11	3.70	44.14	36.04	4.13	41.13	34.92	4.58	37.98	33.72	5.07
	63 (17.2)††	48.67	37.42	2.99	46.18	36.42	3.37	43.62	35.40	3.76	40.96	34.34	4.17	38.21	33.22	4.60	35.32	31.99	5.08
	62 (16.7)	49.21	49.21	2.96	47.13	47.13	3.35	44.96	44.96	3.74	42.67	42.67	4.15	40.23	40.23	4.59	37.59	37.59	5.07
	57 (13.9)	49.14	49.14	2.97	47.06	47.06	3.35	44.90	44.90	3.74	42.61	42.61	4.15	40.18	40.18	4.59	37.55	37.55	5.07

COOLING INDOOR MODEL	CAPACITY	POWER	FURNACE MODEL
*CNPV*6124A**	1.00	1.00	
CAP**4817A**	0.97	1.01	
CAP**4821A**	0.97	1.01	
CAP**4823A**	0.97	1.01	
CAP**4824A**	0.97	1.01	
CAP**6021A**	0.99	0.99	
CAP**6024A**	0.99	0.99	
CAP**6025A**	0.99	0.99	
CAP**6025A**	0.99	0.99	
CNPH*4821A**	0.98	1.02	
CNPH*6024A**	0.99	0.99	
CNPH*6124A**	1.00	1.00	
CNPV*4821A**	0.98	1.02	
CNPV*4824A**	0.98	1.02	
CNPV*6024A**	0.99	0.99	
CSPH*4812A**	0.99	1.03	
CSPH*6012A**	1.00	1.00	
FB4CNF048	0.97	0.97	
FB4CNF060	0.99	0.95	
FE4AN(B,F)005	0.99	0.92	
FE4ANB006	1.00	0.93	
FV4CN(B,F)005	0.99	0.92	
FV4CNB006	1.00	0.93	
FX4DN(B,F)049	1.00	0.96	
FX4DN(B,F)061	1.01	0.94	
FY5BNB060	0.99	1.03	
FY5BNF048	0.99	0.99	
CAP**4817A**	0.97	0.97	58CV(A,X)090–16
CAP**4821A**	0.96	0.96	58CV(A,X)090–16
CAP**6021A**	0.98	0.94	58CV(A,X)090–16
CNPH*4821A**	0.97	0.97	58CV(A,X)090–16
CNPH*6024A**	0.98	0.94	58CV(A,X)090–16
CNPH*6124A**	0.98	0.94	58CV(A,X)090–16
CNPV*4821A**	0.97	0.97	58CV(A,X)090–16
CSPH*4812A**	0.97	0.93	58CV(A,X)090–16
CSPH*6012A**	0.98	0.94	58CV(A,X)090–16
CAP**4821A**	0.96	0.96	58CV(A,X)110–20
CAP**4824A**	0.96	0.96	58CV(A,X)110–20
CAP**6021A**	0.98	0.94	58CV(A,X)110–20

COOLING INDOOR MODEL	CAPACITY	POWER	FURNACE MODEL
CAP**6024A**	0.98	0.94	58CV(A,X)110–20
CNPH*4821A**	0.97	0.93	58CV(A,X)110–20
CNPH*6024A**	0.98	0.94	58CV(A,X)110–20
CNPH*6124A**	0.98	0.94	58CV(A,X)110–20
CNPV*4821A**	0.97	0.93	58CV(A,X)110–20
CNPV*4824A**	0.97	0.93	58CV(A,X)110–20
CNPV*6024A**	0.98	0.94	58CV(A,X)110–20
CNPV*6124A**	0.99	0.92	58CV(A,X)110–20
CSPH*4812A**	0.97	0.93	58CV(A,X)110–20
CSPH*6012A**	0.99	0.95	58CV(A,X)110–20
CAP**4824A**	0.97	0.93	58CV(A,X)135–22
CAP**6024A**	0.98	0.94	58CV(A,X)135–22
CNPH*4821A**	0.97	0.93	58CV(A,X)135–22
CNPH*6024A**	0.98	0.94	58CV(A,X)135–22
CNPH*6124A**	0.99	0.95	58CV(A,X)135–22
CNPV*4824A**	0.97	0.93	58CV(A,X)135–22
CNPV*6024A**	0.98	0.94	58CV(A,X)135–22
CNPV*6124A**	0.99	0.95	58CV(A,X)135–22
CSPH*4812A**	0.98	0.94	58CV(A,X)135–22
CSPH*6012A**	0.99	0.95	58CV(A,X)135–22
CAP**4824A**	0.97	0.93	58CV(A,X)155–22
CAP**6024A**	0.99	0.95	58CV(A,X)155–22
CNPH*4821A**	0.97	0.93	58CV(A,X)155–22
CNPH*6024A**	0.99	0.95	58CV(A,X)155–22
CNPH*6124A**	0.99	0.95	58CV(A,X)155–22
CNPV*4824A**	0.97	0.93	58CV(A,X)155–22
CNPV*6024A**	0.99	0.95	58CV(A,X)155–22
CNPV*6124A**	1.00	0.96	58CV(A,X)155–22
CSPH*4812A**	0.98	0.94	58CV(A,X)155–22
CSPH*6012A**	0.99	0.95	58CV(A,X)155–22
CAP**4823A**	0.97	0.97	58HDV080––20
CAP**4824A**	0.97	0.97	58HDV080––20
CAP**6024A**	0.99	0.95	58HDV080––20
CAP**6025A**	0.99	0.95	58HDV080––20
CNPH*4821A**	0.97	0.97	58HDV080––20
CNPH*6024A**	0.99	0.95	58HDV080––20
CNPH*6124A**	0.99	0.95	58HDV080––20
CNPV*4821A**	0.97	0.97	58HDV080––20
CNPV*4824A**	0.97	0.97	58HDV080––20

COOLING INDOOR MODEL	CAPACITY	POWER	FURNACE MODEL
CNPV*4824A**	0.97	0.97	58HDV080––20
CNPV*6024A**	0.99	0.95	58HDV080––20
CNPV*6024A**	0.99	0.95	58HDV080––20
CNPV*6124A**	1.00	0.96	58HDV080––20
CNPV*6124A**	1.00	0.96	58HDV080––20
CSPH*4812A**	0.98	0.98	58HDV080––20
CSPH*6012A**	0.99	0.95	58HDV080––20
CAP**4824A**	0.97	0.97	58HDV100––20
CAP**6024A**	0.98	0.94	58HDV100––20
CAP**6025A**	0.98	0.94	58HDV100––20
CAP**6025A**	0.98	0.94	58HDV100––20
CNPH*4821A**	0.97	0.97	58HDV100––20
CNPH*6024A**	0.99	0.95	58HDV100––20
CNPH*6124A**	0.99	0.95	58HDV100––20
CNPV*4824A**	0.97	0.97	58HDV100––20
CNPV*4824A**	0.97	0.97	58HDV100––20
CNPV*6024A**	0.99	0.95	58HDV100––20
CNPV*6024A**	0.99	0.95	58HDV100––20
CNPV*6124A**	1.00	0.96	58HDV100––20
CNPV*6124A**	1.00	0.96	58HDV100––20
CSPH*4812A**	0.98	0.98	58HDV100––20
CSPH*6012A**	0.99	0.95	58HDV100––20
CAP**4817A**	0.97	0.97	58MEC080–16
CAP**4821A**	0.97	0.97	58MEC080–16
CAP**6021A**	0.99	0.95	58MEC080–16
CNPH*4821A**	0.97	0.97	58MEC080–16
CNPH*6024A**	0.99	0.95	58MEC080–16
CNPH*6124A**	0.99	0.95	58MEC080–16
CNPV*4821A**	0.97	0.97	58MEC080–16
CSPH*4812A**	0.98	0.98	58MEC080–16
CSPH*6012A**	0.99	0.95	58MEC080–16
CAP**4821A**	0.97	0.93	58MEC100–20
CAP**4824A**	0.97	0.93	58MEC100–20
CAP**6021A**	0.99	0.95	58MEC100–20
CAP**6024A**	0.99	0.95	58MEC100–20
CNPH*4821A**	0.97	0.93	58MEC100–20
CNPH*6024A**	0.99	0.95	58MEC100–20
CNPH*6124A**	0.99	0.95	58MEC100–20
CNPV*4821A**	0.97	0.93	58MEC100–20

DETAILED COOLING CAPACITIES# CONTINUED

24ANB648A30 Outdoor Section With CNPV*6124A** +TDR Indoor Section**

COOLING INDOOR MODEL	CAPACITY	POWER	FURNACE MODEL
CNPV*4824A**	0.97	0.93	58MEC100–20
CNPV*6024A**	0.99	0.95	58MEC100–20
CNPV*6124A**	1.00	0.93	58MEC100–20
CSPH*4812A**	0.98	0.94	58MEC100–20
CSPH*6012A**	0.99	0.95	58MEC100–20
CAP**4824A**	0.97	0.93	58MEC120–20
CAP**6024A**	0.99	0.95	58MEC120–20
CNPH*4821A**	0.98	0.94	58MEC120–20
CNPH*6024A**	0.99	0.95	58MEC120–20
CNPH*6124A**	0.99	0.95	58MEC120–20
CNPV*4824A**	0.98	0.94	58MEC120–20
CNPV*6024A**	0.99	0.95	58MEC120–20
CNPV*6124A**	1.00	0.96	58MEC120–20
CSPH*4812A**	0.98	0.94	58MEC120–20
CSPH*6012A**	1.00	0.96	58MEC120–20
CAP**4821A**	0.96	0.96	58MV(B,C)080–20
CAP**4824A**	0.96	0.96	58MV(B,C)080–20
CAP**6021A**	0.97	0.93	58MV(B,C)080–20
CAP**6024A**	0.97	0.93	58MV(B,C)080–20
CNPH*4821A**	0.96	0.96	58MV(B,C)080–20
CNPH*6024A**	0.97	0.93	58MV(B,C)080–20
CNPH*6124A**	0.98	0.94	58MV(B,C)080–20
CNPV*4821A**	0.96	0.96	58MV(B,C)080–20
CNPV*4824A**	0.96	0.96	58MV(B,C)080–20
CNPV*6024A**	0.97	0.93	58MV(B,C)080–20
CNPV*6124A**	0.99	0.95	58MV(B,C)080–20
CSPH*4812A**	0.97	0.97	58MV(B,C)080–20
CSPH*6012A**	0.98	0.94	58MV(B,C)080–20
CAP**4821A**	0.96	0.96	58MV(B,C)100–20
CAP**4821A**	0.96	0.96	58MV(B,C)100–20
CAP**4824A**	0.96	0.96	58MV(B,C)100–20
CAP**6021A**	0.98	0.98	58MV(B,C)100–20
CAP**6024A**	0.98	0.94	58MV(B,C)100–20
CNPH*4821A**	0.97	0.97	58MV(B,C)100–20
CNPH*6024A**	0.98	0.94	58MV(B,C)100–20
CNPH*6124A**	0.98	0.94	58MV(B,C)100–20
CNPV*4821A**	0.97	0.97	58MV(B,C)100–20
CNPV*4824A**	0.97	0.97	58MV(B,C)100–20
CNPV*6024A**	0.98	0.94	58MV(B,C)100–20
CNPV*6124A**	0.99	0.95	58MV(B,C)100–20
CSPH*4812A**	0.97	0.97	58MV(B,C)100–20
CSPH*6012A**	0.99	0.95	58MV(B,C)100–20
CAP**4824A**	0.96	0.96	58MV(B,C)120–20
CAP**6024A**	0.98	0.94	58MV(B,C)120–20
CNPH*4821A**	0.97	0.93	58MV(B,C)120–20
CNPH*6024A**	0.98	0.94	58MV(B,C)120–20
CNPH*6124A**	0.98	0.94	58MV(B,C)120–20
CNPV*4824A**	0.97	0.93	58MV(B,C)120–20
CNPV*6024A**	0.98	0.94	58MV(B,C)120–20
CNPV*6124A**	0.99	0.95	58MV(B,C)120–20
CSPH*4812A**	0.97	0.93	58MV(B,C)120–20
CSPH*6012A**	0.99	0.95	58MV(B,C)120–20
CAP**4821A**	0.97	0.97	58PH*090–16
CAP**4824A**	0.97	0.97	58PH*090–16
CAP**6021A**	0.99	0.95	58PH*090–16
CAP**6024A**	0.99	0.95	58PH*090–16
CNPH*4821A**	0.97	0.93	58PH*090–16
CNPH*6024A**	0.99	0.95	58PH*090–16
CNPH*6124A**	0.99	0.95	58PH*090–16

COOLING INDOOR MODEL	CAPACITY	POWER	FURNACE MODEL
CNPV*4821A**	0.97	0.93	58PH*090–16
CNPV*4824A**	0.97	0.93	58PH*090–16
CNPV*6024A**	0.99	0.95	58PH*090–16
CNPV*6124A**	1.00	0.96	58PH*090–16
CSPH*4812A**	0.98	0.94	58PH*090–16
CSPH*6012A**	0.99	0.95	58PH*090–16
CAP**4821A**	0.97	0.93	58PH*110–20
CAP**4824A**	0.97	0.93	58PH*110–20
CAP**6021A**	0.98	0.94	58PH*110–20
CAP**6024A**	0.99	0.95	58PH*110–20
CNPH*4821A**	0.97	0.93	58PH*110–20
CNPH*6024A**	0.99	0.95	58PH*110–20
CNPH*6124A**	0.99	0.95	58PH*110–20
CNPV*4821A**	0.97	0.93	58PH*110–20
CNPV*4824A**	0.97	0.93	58PH*110–20
CNPV*6024A**	0.99	0.92	58PH*110–20
CNPV*6124A**	1.00	0.93	58PH*110–20
CSPH*4812A**	0.98	0.94	58PH*110–20
CSPH*6012A**	0.99	0.95	58PH*110–20
CAP**4824A**	0.97	0.93	58PH*135–20
CAP**6024A**	0.99	0.95	58PH*135–20
CNPH*4821A**	0.97	0.93	58PH*135–20
CNPH*6024A**	0.99	0.95	58PH*135–20
CNPH*6124A**	0.99	0.95	58PH*135–20
CNPV*4824A**	0.97	0.93	58PH*135–20
CNPV*6024A**	0.99	0.95	58PH*135–20
CNPV*6124A**	1.00	0.96	58PH*135–20
CSPH*4812A**	0.98	0.94	58PH*135–20
CSPH*6012A**	0.99	0.95	58PH*135–20
CAP**4821A**	0.96	1.00	OVLAAB048112
CAP**6021A**	0.98	0.98	OVLAAB048112
CNPH*4821A**	0.97	1.01	OVLAAB048112
CNPH*6024A**	0.98	0.98	OVLAAB048112
CNPH*6124A**	0.98	0.98	OVLAAB048112
CNPV*4821A**	0.97	1.01	OVLAAB048112
CSPH*4812A**	0.97	1.01	OVLAAB048112
CSPH*6012A**	0.99	0.99	OVLAAB048112
CNPH*4821A**	0.99	0.99	OVLAAB060154
CNPH*6024A**	1.00	0.96	OVLAAB060154
CNPH*6124A**	1.00	0.96	OVLAAB060154
CSPH*4812A**	0.99	0.99	OVLAAB060154
CSPH*6012A**	1.01	0.97	OVLAAB060154

See notes on pg. 51

DETAILED COOLING CAPACITIES# CONTINUED

EVAPORATOR AIR		CONDENSER ENTERING AIR TEMPERATURES °F (°C)																	
		75 (23.9)			85 (29.4)			95 (35)			105 (40.6)			115 (46.1)			125 (51.7)		
CFM	EWB °F (°C)	Capacity MBtuh		Total Sys. KW**	Capacity MBtuh		Total Sys. KW**	Capacity MBtuh		Total Sys. KW**	Capacity MBtuh		Total Sys. KW**	Capacity MBtuh		Total Sys. KW**	Capacity MBtuh		Total Sys. KW**
		Total	Sens‡		Total	Sens‡		Total	Sens‡		Total	Sens‡		Total	Sens‡		Total	Sens‡	
24ANB660A**30 Outdoor Section With CNPV*6124A**+TDR Indoor Section																			
1750	72 (22.2)	66.03	33.71	3.54	62.86	32.49	3.92	59.49	31.24	4.33	55.92	29.95	4.78	52.09	28.60	5.29	47.94	27.18	5.86
	67 (19.4)	60.16	42.01	3.52	57.34	40.81	3.90	54.33	39.55	4.30	51.12	38.25	4.75	47.67	36.88	5.26	43.93	35.42	5.83
	63 (17.2)††	55.92	40.36	3.52	53.34	39.17	3.88	50.59	37.93	4.28	47.64	36.64	4.73	44.45	35.28	5.23	41.00	33.82	5.81
	62 (16.7)	55.30	50.14	3.52	52.96	52.74	3.88	50.72	50.72	4.28	48.29	48.29	4.73	45.62	45.62	5.24	42.65	42.65	5.83
	57 (13.9)	54.87	54.87	3.51	52.85	52.85	3.88	50.64	50.64	4.28	48.23	48.23	4.73	45.56	45.56	5.24	42.60	42.60	5.83
2000	72 (22.2)	66.94	35.49	3.63	63.63	34.26	4.01	60.13	32.98	4.43	56.41	31.66	4.88	52.46	30.30	5.39	48.19	28.86	5.96
	67 (19.4)	61.07	44.91	3.62	58.11	43.67	3.99	55.00	42.39	4.40	51.67	41.04	4.85	48.13	39.62	5.36	44.32	38.08	5.93
	63 (17.2)††	56.81	43.05	3.61	54.12	41.83	3.98	51.26	40.56	4.38	48.20	39.22	4.83	44.93	37.80	5.34	41.42	36.25	5.91
	62 (16.7)	57.02	57.02	3.61	54.82	54.82	3.98	52.43	52.43	4.39	49.82	49.82	4.84	46.96	46.96	5.35	43.79	43.79	5.93
	57 (13.9)	56.95	56.95	3.61	54.75	54.75	3.98	52.36	52.36	4.39	49.76	49.76	4.84	46.90	46.90	5.35	43.74	43.74	5.93
2250	72 (22.2)	67.58	37.19	3.73	64.15	35.93	4.11	60.53	34.64	4.53	56.72	33.31	4.98	52.67	31.92	5.49	48.30	30.47	6.06
	67 (19.4)	61.73	47.68	3.71	58.69	46.41	4.09	55.48	45.08	4.50	52.08	43.68	4.95	48.50	42.18	5.46	44.73	44.51	6.03
	63 (17.2)††	57.47	45.62	3.71	54.69	44.36	4.08	51.76	43.04	4.48	48.64	41.65	4.93	45.33	40.11	5.43	41.94	41.94	6.01
	62 (16.7)	58.71	58.71	3.71	56.35	56.35	4.08	53.80	53.80	4.49	51.03	51.03	4.94	48.01	48.01	5.45	44.66	44.66	6.03
	57 (13.9)	58.64	58.64	3.71	56.29	56.29	4.08	53.74	53.74	4.49	50.98	50.98	4.94	47.96	47.96	5.45	44.62	44.62	6.03

COOLING INDOOR MODEL	CAPACITY	POWER	FURNACE MODEL
*CNPV*6124A**	1.00	1.00	
CAP**6021A**	0.97	0.97	
CAP**6024A**	0.99	0.99	
CAP**6025A**	0.99	0.99	
CNPH*6024A**	0.99	0.99	
CNPH*6124A**	0.98	0.98	
CNPV*6024A**	0.99	0.99	
CSPH*6012A**	0.99	0.99	
FB4CNF060	0.98	0.98	
FE4ANB006	0.99	0.92	
FV4CNB006	0.99	0.92	
FX4DN(B,F)061	1.00	0.96	
FY5BNB060	0.98	1.02	
CAP**6021A**	0.97	0.97	58CV(A,X)110–20
CAP**6024A**	0.97	0.94	58CV(A,X)110–20
CNPH*6024A**	0.97	0.94	58CV(A,X)110–20
CNPH*6124A**	0.98	0.94	58CV(A,X)110–20
CNPV*6024A**	0.97	0.97	58CV(A,X)110–20
CNPV*6124A**	0.99	0.95	58CV(A,X)110–20
CSPH*6012A**	0.98	0.94	58CV(A,X)110–20
CAP**6024A**	0.97	0.94	58CV(A,X)135–22
CNPH*6024A**	0.97	0.94	58CV(A,X)135–22
CNPH*6124A**	0.98	0.94	58CV(A,X)135–22
CNPV*6024A**	0.97	0.94	58CV(A,X)135–22
CNPV*6124A**	0.99	0.95	58CV(A,X)135–22
CSPH*6012A**	0.98	0.94	58CV(A,X)135–22

COOLING INDOOR MODEL	CAPACITY	POWER	FURNACE MODEL
CAP**6024A**	0.98	0.94	58CV(A,X)155–22
CNPH*6024A**	0.98	0.94	58CV(A,X)155–22
CNPH*6124A**	0.98	0.94	58CV(A,X)155–22
CNPV*6024A**	0.98	0.94	58CV(A,X)155–22
CNPV*6124A**	0.99	0.95	58CV(A,X)155–22
CSPH*6012A**	0.98	0.94	58CV(A,X)155–22
CNPH*6024A**	0.97	1.01	58HDV080––20
CNPH*6124A**	0.98	1.02	58HDV080––20
CNPV*6024A**	0.97	1.01	58HDV080––20
CNPV*6124A**	0.99	0.99	58HDV080––20
CNPH*6024A**	0.97	0.97	58HDV100––20
CNPH*6124A**	0.98	0.98	58HDV100––20
CNPV*6024A**	0.97	0.97	58HDV100––20
CNPV*6124A**	0.99	0.99	58HDV100––20
CNPH*6024A**	0.96	0.96	58MEC080–16
CSPH*6012A**	0.97	0.94	58MEC080–16
CAP**6021A**	0.97	0.94	58MEC100–20
CAP**6024A**	0.97	0.94	58MEC100–20
CNPH*6024A**	0.97	0.94	58MEC100–20
CNPH*6124A**	0.97	0.94	58MEC100–20
CNPV*6124A**	0.98	0.94	58MEC100–20
CSPH*6012A**	0.98	0.94	58MEC100–20
CAP**6024A**	0.97	0.94	58MEC120–20
CNPH*6024A**	0.97	0.94	58MEC120–20
CNPH*6024A**	0.97	0.94	58MEC120–20
CNPH*6124A**	0.98	0.94	58MEC120–20

COOLING INDOOR MODEL	CAPACITY	POWER	FURNACE MODEL
CNPV*6024A**	0.97	0.94	58MEC120–20
CNPV*6124A**	0.99	0.95	58MEC120–20
CSPH*6012A**	0.98	0.94	58MEC120–20
CNPV*6124A**	0.98	0.94	58MV(B,C)120–20
CSPH*6012A**	0.97	0.94	58MV(B,C)120–20
CAP**6021A**	0.97	0.94	58PH*110–20
CAP**6024A**	0.97	0.94	58PH*110–20
CNPH*6024A**	0.98	0.94	58PH*110–20
CNPH*6124A**	0.98	0.94	58PH*110–20
CNPV*6024A**	0.98	0.94	58PH*110–20
CNPV*6124A**	0.99	0.95	58PH*110–20
CSPH*6012A**	0.98	0.94	58PH*110–20
CAP**6024A**	0.97	0.94	58PH*135–20
CNPH*6024A**	0.97	0.94	58PH*135–20
CNPH*6124A**	0.97	0.94	58PH*135–20
CNPV*6024A**	0.97	0.94	58PH*135–20
CNPV*6124A**	0.99	0.95	58PH*135–20
CSPH*6012A**	0.98	0.94	58PH*135–20
CAP**6024A**	0.97	1.04	OVLAAB060154
CAP**6025A**	0.97	1.04	OVLAAB060154
CNPH*6024A**	0.97	1.04	OVLAAB060154
CNPH*6124A**	0.98	1.05	OVLAAB060154
CNPV*6024A**	0.97	1.04	OVLAAB060154
CNPV*6124A**	0.99	1.03	OVLAAB060154
CSPH*6012A**	0.98	1.02	OVLAAB060154

* Tested combination.

† Total and sensible capacities are net capacities. Blower motor heat has been subtracted.

‡ Sensible capacities shown are based on 80°F (27°C) entering air at the indoor coil. For sensible capacities at other than 80°F (27°C), deduct 835 Btuh (245 kW) per 1000 CFM (480 L/S) of indoor coil air for each degree below 80°F (27°C), or add 835 Btuh (245 kW) per 1000 CFM (480 L/S) of indoor coil air per degree above 80°F (27°C).

\# Detailed cooling capacities are based on indoor and outdoor unit at the same elevation per AHRI standard 210/240–2008. If additional tubing length and/or indoor unit is located above outdoor unit, a slight variation in capacity may occur.

** System kw is total of indoor and outdoor unit kilowatts.

†† At TVA rating indoor condition (75°F edb/63°F ewb). All other indoor air temperatures are at 80°F edb.

NOTE: When the required data falls between the published data, interpolation may be performed. Extrapolation is not an acceptable practice.

EWB — Entering Wet Bulb

CONDENSER ONLY RATINGS*

SST °F (°C)		CONDENSER ENTERING AIR TEMPERATURES °F (°C)							
		55 (12.78)	65 (18.33)	75 (23.89)	85 (29.44)	95 (35.0)	105 (40.56)	115 (46.11)	125 (51.67)
24ANB618A30**									
30 (−1.11)	TCG	14.00	13.50	13.00	12.40	11.80	11.00	10.20	9.30
	SDT	65.20	74.80	84.40	94.00	103.60	113.10	122.60	132.00
	KW	0.66	0.78	0.91	1.04	1.20	1.37	1.58	1.83
35 (1.67)	TCG	15.60	15.00	14.50	13.80	13.10	12.30	11.40	10.40
	SDT	66.30	75.90	85.40	94.90	104.40	113.80	123.20	132.70
	KW	0.65	0.77	0.90	1.04	1.20	1.38	1.58	1.83
40 (4.44)	TCG	17.30	16.70	16.10	15.30	14.60	13.70	12.70	11.70
	SDT	67.50	76.90	86.40	95.80	105.20	114.60	124.00	133.30
	KW	0.64	0.77	0.90	1.05	1.20	1.38	1.59	1.83
45 (7.22)	TCG	19.10	18.50	17.70	17.00	16.10	15.20	14.20	13.00
	SDT	68.70	78.00	87.40	96.70	106.10	115.40	124.80	134.10
	KW	0.63	0.77	0.90	1.05	1.21	1.39	1.59	1.83
50 (10.0)	TCG	21.10	20.30	19.50	18.70	17.80	16.70	15.70	14.50
	SDT	69.90	79.20	88.40	97.70	107.00	116.30	125.60	134.80
	KW	0.63	0.76	0.90	1.05	1.21	1.39	1.60	1.84
55 (12.78)	TCG	23.10	22.30	21.50	20.50	19.50	18.40	17.20	15.90
	SDT	71.20	80.40	89.60	98.80	108.00	117.20	126.50	135.60
	KW	0.62	0.76	0.91	1.06	1.22	1.40	1.61	1.85
24ANB624A30**									
30 (−1.11)	TCG	20.10	19.40	18.50	17.60	16.70	15.60	14.40	13.10
	SDT	66.10	75.80	85.30	94.90	104.40	114.00	123.40	132.80
	KW	0.97	1.13	1.29	1.46	1.65	1.87	2.13	2.42
35 (1.67)	TCG	22.30	21.40	20.50	19.50	18.50	17.30	16.00	14.70
	SDT	67.20	76.80	86.30	95.80	105.30	114.70	124.10	133.50
	KW	0.96	1.12	1.29	1.46	1.66	1.87	2.13	2.42
40 (4.44)	TCG	24.60	23.70	22.70	21.60	20.40	19.10	17.80	16.30
	SDT	68.40	77.90	87.30	96.70	106.10	115.50	124.80	134.10
	KW	0.95	1.12	1.29	1.46	1.66	1.88	2.13	2.42
45 (7.22)	TCG	27.10	26.00	24.90	23.70	22.40	21.10	19.60	18.00
	SDT	69.60	79.00	88.30	97.60	107.00	116.30	125.60	134.90
	KW	0.94	1.11	1.29	1.47	1.67	1.89	2.14	2.43
50 (10.0)	TCG	29.70	28.60	27.30	26.00	24.60	23.10	21.50	19.80
	SDT	70.80	80.10	89.40	98.70	107.90	117.20	126.40	135.60
	KW	0.93	1.11	1.29	1.47	1.67	1.90	2.15	2.43
55 (12.78)	TCG	32.50	31.20	29.90	28.40	26.90	25.30	23.50	21.70
	SDT	72.10	81.30	90.50	99.70	108.90	118.10	127.30	136.40
	KW	0.93	1.11	1.29	1.48	1.69	1.91	2.16	2.45
24ANB630A30**									
30 (−1.11)	TCG	23.80	22.90	21.90	20.90	19.80	18.50	17.00	15.30
	SDT	68.10	77.50	87.00	96.40	105.80	115.10	124.40	133.60
	KW	1.14	1.32	1.52	1.74	1.99	2.29	2.63	3.02
35 (1.67)	TCG	26.30	25.30	24.30	23.10	21.90	20.50	19.00	17.20
	SDT	69.40	78.70	88.10	97.40	106.70	116.00	125.30	134.40
	KW	1.15	1.33	1.52	1.75	2.00	2.30	2.64	3.03
40 (4.44)	TCG	29.00	27.90	26.80	25.50	24.20	22.80	21.10	19.20
	SDT	70.70	79.90	89.20	98.50	107.70	117.00	126.20	135.30
	KW	1.16	1.33	1.53	1.75	2.01	2.31	2.65	3.05
45 (7.22)	TCG	31.90	30.70	29.40	28.10	26.70	25.10	23.40	21.40
	SDT	72.00	81.20	90.40	99.60	108.80	118.00	127.20	136.30
	KW	1.16	1.33	1.53	1.76	2.01	2.31	2.66	3.06
50 (10.0)	TCG	35.00	33.60	32.30	30.80	29.30	27.60	25.70	23.60
	SDT	73.50	82.50	91.60	100.80	110.00	119.20	128.20	137.20
	KW	1.16	1.33	1.53	1.76	2.02	2.32	2.67	3.07
55 (12.78)	TCG	38.30	36.80	35.30	33.70	32.00	30.20	28.20	26.00
	SDT	75.00	84.00	93.00	102.10	111.20	120.30	129.30	138.20
	KW	1.15	1.33	1.53	1.76	2.02	2.32	2.67	3.08

See notes on page 54

CONDENSER ONLY RATINGS* CONTINUED

SST °F (°C)		CONDENSER ENTERING AIR TEMPERATURES °F (°C)							
		55 (12.78)	65 (18.33)	75 (23.89)	85 (29.44)	95 (35.0)	105 (40.56)	115 (46.11)	125 (51.67)
24ANB636A30**									
30 (−1.11)	TCG	30.50	29.20	27.80	26.30	24.70	23.00	21.20	19.20
	SDT	69.50	78.70	87.90	97.20	106.60	115.90	125.20	134.50
	KW	1.41	1.62	1.85	2.10	2.37	2.69	3.07	3.51
35 (1.67)	TCG	33.70	32.20	30.70	29.10	27.40	25.50	23.60	21.50
	SDT	70.70	79.90	89.10	98.30	107.50	116.80	126.10	135.40
	KW	1.41	1.63	1.86	2.11	2.38	2.70	3.07	3.51
40 (4.44)	TCG	37.10	35.50	33.80	32.10	30.20	28.20	26.10	23.90
	SDT	72.10	81.20	90.30	99.50	108.60	117.80	127.10	136.30
	KW	1.42	1.64	1.87	2.12	2.40	2.71	3.08	3.52
45 (7.22)	TCG	40.80	39.00	37.20	35.30	33.20	31.10	28.80	26.40
	SDT	73.70	82.60	91.60	100.70	109.80	118.90	128.10	137.20
	KW	1.43	1.65	1.88	2.13	2.41	2.73	3.10	3.53
50 (10.0)	TCG	44.80	42.80	40.80	38.70	36.50	34.10	31.70	29.00
	SDT	75.30	84.10	93.10	102.00	111.00	120.10	129.10	138.10
	KW	1.45	1.67	1.90	2.15	2.43	2.75	3.12	3.54
55 (12.78)	TCG	48.90	46.80	44.60	42.30	39.90	37.40	34.70	31.80
	SDT	77.00	85.70	94.60	103.40	112.30	121.30	130.20	139.10
	KW	1.47	1.70	1.93	2.18	2.46	2.77	3.14	3.56
24ANB642A30**									
30 (−1.11)	TCG	33.00	32.30	31.40	30.30	28.90	27.40	25.60	23.70
	SDT	69.80	79.20	88.70	98.10	107.40	116.70	125.90	135.10
	KW	1.61	1.84	2.12	2.45	2.84	3.29	3.81	4.40
35 (1.67)	TCG	36.40	35.70	34.70	33.40	32.00	30.30	28.40	26.30
	SDT	71.20	80.60	89.90	99.20	108.40	117.70	126.80	136.00
	KW	1.62	1.86	2.14	2.47	2.86	3.31	3.83	4.42
40 (4.44)	TCG	40.10	39.30	38.20	36.80	35.20	33.40	31.40	29.10
	SDT	72.70	81.90	91.20	100.40	109.60	118.70	127.80	136.90
	KW	1.63	1.87	2.15	2.49	2.88	3.33	3.85	4.45
45 (7.22)	TCG	44.10	43.10	41.90	40.40	38.60	36.70	34.50	32.00
	SDT	74.20	83.30	92.50	101.60	110.80	119.90	128.90	137.90
	KW	1.64	1.88	2.17	2.51	2.91	3.36	3.88	4.48
50 (10.0)	TCG	48.30	47.20	45.80	44.20	42.30	40.10	37.70	35.00
	SDT	75.80	84.80	93.90	103.00	112.00	121.00	130.00	138.90
	KW	1.65	1.90	2.19	2.54	2.94	3.39	3.92	4.51
55 (12.78)	TCG	52.80	51.50	50.00	48.10	46.00	43.70	41.10	38.20
	SDT	77.40	86.40	95.40	104.40	113.40	122.30	131.20	140.00
	KW	1.67	1.92	2.22	2.57	2.97	3.43	3.96	4.55
24ANB648A30**									
30 (−1.11)	TCG	40.10	38.00	35.90	33.80	31.50	29.20	26.70	24.20
	SDT	67.60	77.00	86.40	95.80	105.10	114.50	123.80	133.10
	KW	1.97	2.26	2.54	2.83	3.13	3.46	3.84	4.29
35 (1.67)	TCG	44.40	42.00	39.70	37.30	34.80	32.30	29.60	26.80
	SDT	68.90	78.20	87.50	96.80	106.10	115.30	124.60	133.80
	KW	1.90	2.22	2.53	2.83	3.14	3.48	3.87	4.30
40 (4.44)	TCG	49.10	46.40	43.80	41.10	38.40	35.60	32.70	29.60
	SDT	70.30	79.40	88.60	97.80	107.00	116.30	125.40	134.60
	KW	1.80	2.15	2.49	2.81	3.14	3.50	3.89	4.32
45 (7.22)	TCG	54.20	51.20	48.20	45.20	42.20	39.20	36.00	32.60
	SDT	71.70	80.70	89.80	99.00	108.10	117.30	126.40	135.40
	KW	1.66	2.05	2.41	2.77	3.13	3.50	3.90	4.34
50 (10.0)	TCG	59.80	56.40	53.00	49.70	46.40	43.00	39.40	35.70
	SDT	73.20	82.10	91.20	100.20	109.30	118.30	127.30	136.30
	KW	1.47	1.90	2.31	2.70	3.09	3.48	3.90	4.35
55 (12.78)	TCG	65.80	62.00	58.30	54.50	50.80	47.00	43.10	39.00
	SDT	74.80	83.60	92.60	101.50	110.50	119.40	128.40	137.30
	KW	1.24	1.72	2.17	2.60	3.02	3.44	3.88	4.35

See notes on page 54

CONDENSER ONLY RATINGS* CONTINUED

SST °F (°C)		CONDENSER ENTERING AIR TEMPERATURES °F (°C)							
		55 (12.78)	65 (18.33)	75 (23.89)	85 (29.44)	95 (35.0)	105 (40.56)	115 (46.11)	125 (51.67)
24ANB660A30**									
30 (−1.11)	TCG	45.10	43.80	42.30	40.50	38.50	36.20	33.50	30.50
	SDT	69.00	78.40	87.70	97.10	106.40	115.60	124.80	134.00
	KW	2.22	2.52	2.83	3.17	3.56	4.00	4.53	5.15
35 (1.67)	TCG	50.00	48.40	46.70	44.70	42.50	40.00	37.10	33.80
	SDT	70.40	79.70	89.00	98.20	107.40	116.60	125.80	134.90
	KW	2.21	2.52	2.85	3.19	3.58	4.03	4.55	5.16
40 (4.44)	TCG	55.10	53.40	51.40	49.20	46.70	44.00	40.80	37.30
	SDT	71.90	81.10	90.20	99.40	108.50	117.60	126.70	135.70
	KW	2.21	2.53	2.86	3.21	3.61	4.05	4.57	5.18
45 (7.22)	TCG	60.70	58.60	56.40	54.00	51.20	48.20	44.80	41.00
	SDT	73.50	82.50	91.60	100.70	109.70	118.70	127.70	136.70
	KW	2.20	2.53	2.87	3.23	3.63	4.08	4.60	5.20
50 (10.0)	TCG	66.50	64.20	61.70	59.00	56.00	52.60	48.90	44.70
	SDT	75.10	84.00	93.00	102.00	111.00	119.90	128.80	137.60
	KW	2.19	2.53	2.89	3.26	3.66	4.11	4.63	5.22
55 (12.78)	TCG	72.80	70.10	67.30	64.20	60.90	57.20	53.10	48.60
	SDT	76.80	85.70	94.50	103.40	112.30	121.10	129.90	138.60
	KW	2.18	2.54	2.90	3.28	3.69	4.15	4.66	5.25

* AHRI listing applies only to systems shown in Combination Ratings table.

KW – Outdoor Unit Kilowatts Only.

SDT – Saturated Temperature Leaving Compressor (°F/°C)

SST – Saturated Temperature Entering Compressor (°F)

TCG – Gross Cooling Capacity (1000 Btuh)

GUIDE SPECIFICATIONS
GENERAL

System Description

Outdoor-mounted, air-cooled, split-system air conditioner unit suitable for ground or rooftop installation. Unit consists of a hermetic compressor, an air-cooled coil, propeller-type condenser fan, and a control box. Unit will discharge supply air upward as shown on contract drawings. Unit will be used in a refrigeration circuit to match up to a packaged fan coil or coil unit.

Quality Assurance

— Unit will be rated in accordance with the latest edition of AHRI Standard 210.

— Unit will be certified for capacity and efficiency, and listed in the latest AHRI directory.

— Unit construction will comply with latest edition of ANSI/ASHRAE and with NEC.

— Unit will be constructed in accordance with UL standards and will carry the UL label of approval. Unit will have c-UL approval.

— Unit cabinet will be capable of withstanding Federal Test Method Standard No. 141 (Method 6061) 500-hr salt spray test.

— Air-cooled condenser coils will be leak tested and pressure tested.

— Unit constructed in ISO9001 approved facility.

Delivery, Storage, and Handling

— Unit will be shipped as single package only and is stored and handled per unit manufacturer's recommendations.

Warranty (for inclusion by specifying engineer)

— U.S. and Canada only.

PRODUCTS

Equipment

— Factory assembled, single piece, air-cooled air conditioner unit. Contained within the unit enclosure is all factory wiring, piping, controls, compressor, refrigerant charge Puron® (R-410A), and special features required prior to field start-up.

Unit Cabinet

— Unit cabinet, including louvered coil guard, will be constructed of galvanized steel, bonderized, and coated with a powder coat paint.

Fans

— Condenser fan will be direct-drive foward-swept propeller type, discharging air upward.

— Condenser fan motors will be totally enclosed, 1-phase type with class B insulation and permanently lubricated bearings. Shafts will be corrosion resistant.

— Fan blades will be statically and dynamically balanced.

— Condenser fan openings will be equipped with coated steel wire safety guards.

Compressor

— Compressor will be hermetically sealed.

— Compressor will be mounted on rubber split-post vibration isolators.

— Compressor will be covered with a sound absorbing blanket.

Condenser Coil

— Condenser coil will be air cooled.

— Coil will be constructed of aluminum fins mechanically bonded to copper tubes which are then cleaned, dehydrated, and sealed.

Refrigeration Components

— Refrigeration circuit components will include liquid-line back-seating shutoff valve with sweat connections, vapor-line back-seating shutoff valve with sweat connections, system charge of Puron® (R-410A) refrigerant, and compressor oil.

— Unit will be equipped with high-pressure switch, low pressure switch and filter drier for Puron refrigerant.

Operating Characteristics

— The capacity of the unit will meet or exceed _____ Btuh at a suction temperature of _____°F/°C. The power consumption at full load will not exceed _____ kW.

— Combination of the unit and the evaporator or fan coil unit will have a total net cooling capacity of _____ Btuh or greater at conditions of _____ CFM entering air temperature at the evaporator at _____ °F/°C wet bulb and _____ °F/°C dry bulb, and air entering the unit at _____ °F/°C.

— The system will have a SEER of _____ Btuh/watt or greater at DOE conditions.

Electrical Requirements

— Nominal unit electrical characteristics will be _____ v, single phase, 60 hz. The unit will be capable of satisfactory operation within voltage limits of _____ v to _____ v.

— Unit electrical power will be single point connection.

— Control circuit will be 24v.

Special Features

— Refer to section of this literature identifying accessories and descriptions for specific features and available enhancements.

SYSTEM DESIGN SUMMARY

1. Intended for outdoor installation with free air inlet and outlet. Outdoor fan external static pressure available is less than 0.01-in. wc.
2. Minimum outdoor operating air temperature without low-ambient operation accessory is 55°F (12.8°C).
3. Maximum outdoor operating air temperature is 125°F (51.7°C).
4. For reliable operation, unit should be level in all horizontal planes.
5. For interconnecting refrigerant tube lengths greater than 80 ft (23.4 m) and/or 35 ft (10.7 m) vertical differential, consult Residential Piping and Longline Guideline and Service Manual available from equipment distributor.
6. If any refrigerant tubing is buried, provide a 6 in. (152.4 mm) vertical rise to the valve connections at the unit. Refrigerant tubing lengths up to 36 in. (914.4 mm) may be buried without further consideration. Do not bury refrigerant lines longer than 36 in. (914.4 mm).
7. Use only copper wire for electric connection at unit. Aluminum and clad aluminum are not acceptable for the type of connector provided.
8. Do not apply capillary tube indoor coils to these units.
9. Factory-supplied filter drier must be installed.

Copyright 2011 Carrier Corp. • 7310 W. Morris St. • Indianapolis, IN 46231 Printed in U.S.A. Edition Date: 06/11 **Catalog No: 24ANB6-2PD**

Manufacturer reserves the right to change, at any time, specifications and designs without notice and without obligations. Replaces: 24ANB6-1PD