40MVQ018 with 38MVQ018
Comfort™ Series High Wall Duct–Free Split System Heat Pump with Puron® Refrigerant

Carrier®
Turn to the Experts.℠

Submittal Data

Job Data:_____ Location:_____

Buyer:_____ Buyer P.O.#_____ Carrier # _____

Unit Number:_____ Model Number: _____

Performance Data Certified By: _____ Date: _____

eez
Worry-FREE. Hassle-FREE. Duct-FREE.™

Puron
the environmentally sound refrigerant

FEATURES

- 13 SEER / 7.7 HSPF
- Wireless remote standard
- Low voltage controls
- User selectable fan sdpeeds (auto, low med., high)
- Indoor unit is powered from the outdoor unit
- Auto restart
- Diagnostics
- Dehumidification mode
- Sleep mode
- Auto swing
- Timer
- Cleanable filters
- Limited Warranty: 1-year on all parts/5-years on compressor
- Low ambient operation to -20°F (-28.9°C) (with accessories)

Indoor Unit - 40MVQ / Outdoor Unit - 38MVQ
(Unless otherwise indicated, data applies to both indoor and outdoor models)

SYSTEM SIZE 018
REFRIGERANT R-410A
PERFORMANCE
Nominal Capacity 18,000
SEER 13
HSPF 7.7
Airflow (Low/Med/High) . . . . . 500 / 570 / 630
Performance at actual conditions: Attached ☐ Not Attached ☐
SOUND PRESSURE dBA
Indoor (Low/Med/High) . . . . . 43 / 45 / 47
Outdoor 61
SOUND POWER dBA
Indoor (Low/Med/High) . . . . . 54 / 56 / 58
Outdoor 72

ELECTRICAL
System Voltage . . . . . 208/230 V
MCA (outdoor) 11
MOCP (outdoor) 20
Fan Motor (Indoor) (FLA) 26
Motor Watts 31
CONTROLS
Control Remote . . . . . Wireless
Control Voltage . . . . . Low Voltage
Interconnecting (indoor to outdoor) Wiring (0-50 ft.) . . . . . 18 AWG
Interconnecting (indoor to outdoor) Wiring (50-100 ft.) . . . . . 16 AWG
REFRIGERANT LINES (Insulate both lines)
Mixed Phase Line (in.) OD 1/4
Vapor Line (in.) OD 1/2
Metering/Control Device . . . . . Capillary tube in outdoor unit

Condensate Pump:	Required ☐	Not Required ☐
Low Ambient Controls:	Required ☐	Not Required ☐
Crankcase Heater:	Required ☐	Not Required ☐
Wind Baffle:	Required ☐	Not Required ☐

Optional:

Compressor extended warranty 6-10 years:	Required ☐	Not Required ☐
All parts & labor 2-5 years:	Required ☐	Not Required ☐
All parts & labor 2-5 years + Compressor 6-10 years:	Required ☐	Not Required ☐

UNIT DIMENSIONS – INDOOR MODEL

Model Size	W in. (mm)	H in. (mm)	D in. (mm)	Operating Weight lb (kg)
18K	49.21 (1250)	12.80 (325)	9.06 (230)	55.0 (25)

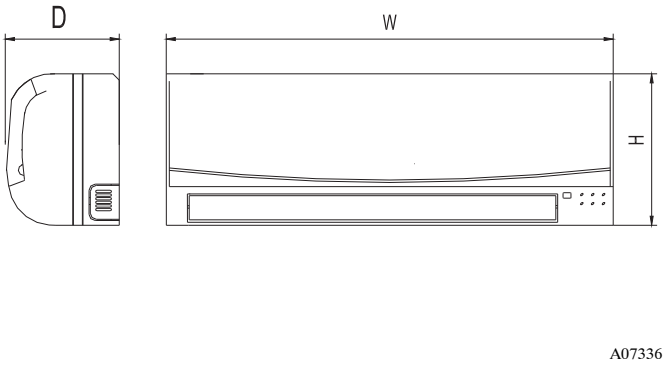

Fig. 1 – 40MVQ Dimensions

UNIT CLEARANCES – INDOOR MODEL

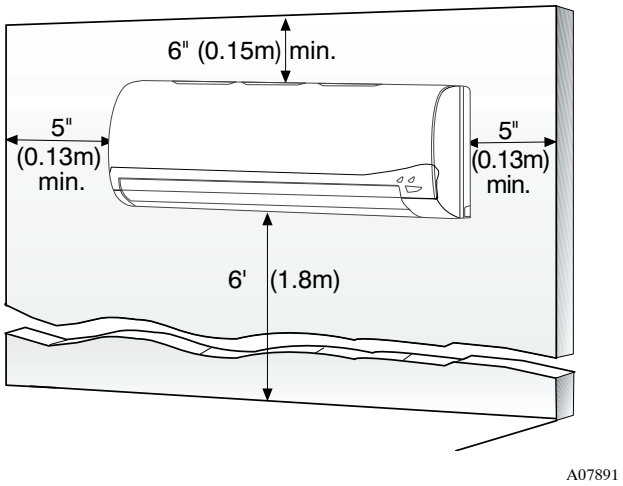

Fig. 2 – 40MVQ Clearance

UNIT DIMENSIONS – OUTDOOR MODEL

Model Size	W in. (mm)	H in. (mm)	L1 in. (mm)	L2 in. (mm)	L3 in. (mm)	Weight lb (kg)
18K	33.07 (840)	27.36 (695)	22.05 (560)	14.17 (360)	13.19 (335)	125.4 (57)

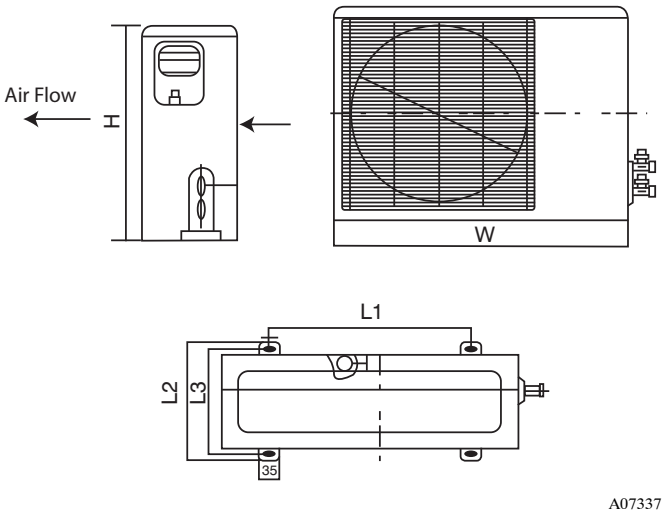

Fig. 3 – 38MVQ Dimensions

UNIT CLEARANCES – OUTDOOR MODEL

UNIT	18k in. (mm)
A	24 (610)
B	36 (914)
C	24 (610)
D	12 (305)
E	12 (305)

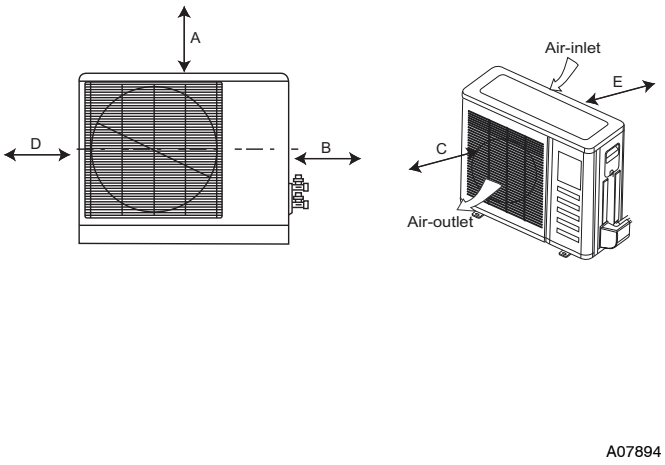

Fig. 4 – 38MVQ Clearances

Copyright 2008 Carrier Corp. • 7310 W. Morris St. • Indianapolis, IN 46231
Printed in U.S.A. Edition Date: 06/08 **Catalog No: 38–40MVQ018–2SB**

Manufacturer reserves the right to change, at any time, specifications and designs without notice and without obligations.
Replaces: 38–40MVQ018–1SB