38YDB
WeatherMaker™ Two-Speed Split System Heat Pump with Puron® Refrigerant

Visit www.carrier.com

Installation Start-Up and Instructions

NOTE: Read the entire instruction manual before starting the installation.

This symbol → indicates a change since the last issue.

SAFETY CONSIDERATIONS

Improper installation, adjustment, alteration, service, maintenance, or use can cause explosion, fire, electrical shock, or other conditions which may cause death, personal injury, or property damage. Consult a qualified installer, service agency, or your distributor or branch for information or assistance. The qualified installer or agency must use factory-authorized kits or accessories when modifying this product. Refer to the individual instructions packaged with the kits or accessories when installing.

Follow all safety codes. Wear safety glasses, protective clothing, and work gloves. Use quenching cloth for brazing operations. Have fire extinguisher available. Read these instructions thoroughly and follow all warnings or cautions included in literature and attached to the unit. Consult local building codes and National Electrical Code (NEC) for special requirements.

Recognize safety information. This is the safety-alert symbol ⚠ . When you see this symbol on the unit and in instructions or manuals, be alert to the potential for personal injury.

Understand the signal words DANGER, WARNING, CAUTION, and NOTE. These words are used with the safety-alert symbol. DANGER identifies the most serious hazards which **will** result in severe personal injury or death.

WARNING signifies hazards which **could** result in personal injury or death. CAUTION is used to identify unsafe practices which **would** result in minor personal injury or product and property damage. NOTE is used to highlight suggestions which **will** result in enhanced installation, reliability, or operation.

⚠ WARNING

Before installing, modifying, or servicing system, main electrical disconnect switch must be in the OFF position. There may be more than 1 disconnect switch. Lock out and tag switch with a suitable warning label. Electrical shock can cause personal injury or death.

⚠ CAUTION

Puron® (R-410A) systems operate at higher pressures than standard R-22 systems. Be certain that service equipment is rated for R-410A. Some R-22 service equipment may not be acceptable. Check with your distributor.

INSTALLATION RECOMMENDATIONS

NOTE: In some cases noise in the living area has been traced to gas pulsations from improper installation of equipment.

1. Locate unit away from windows, patios, decks, etc. where unit operation sound may disturb customer.
2. Ensure that vapor and liquid tube diameters are appropriate to capacity of unit.

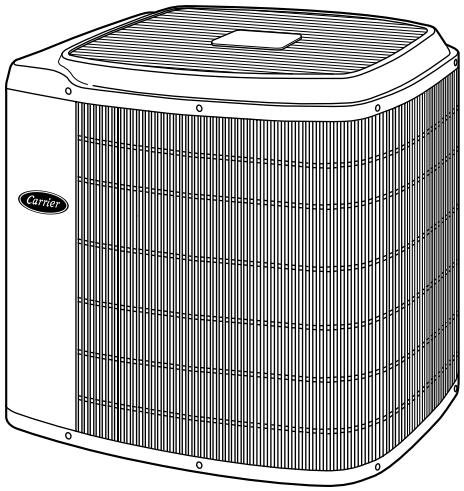

A98516

Fig. 1—Model 38YDB

3. Run refrigerant tubes as directly as possible by avoiding unnecessary turns and bends.
4. When passing refrigerant tubes through the wall, seal opening with RTV or other pliable silicon-based caulk. (See Fig. 2.)
5. Avoid direct tubing contact with water pipes, duct work, floor joists, wall studs, floors, and walls, and brick.
6. Do not suspend refrigerant tubing from joists and studs with a rigid wire or strap which comes in direct contact with tubing. (See Fig. 2.)
7. When necessary, use hanger straps which are 1 in. wide and conform to shape of tubing insulation. (See Fig. 2.)
8. Isolate hanger straps from insulation by using metal sleeves bent to conform to shape of insulation.
9. Ensure that tubing insulation is pliable and completely surrounds vapor tube.

Outdoor unit contains system refrigerant charge for operation with indoor unit of the same size when connected by 15 ft of field-supplied or factory accessory tubing. For proper unit operation, check refrigerant charge using charging information located on control box cover or in the Check Charge section of this instruction.

IMPORTANT: Maximum liquid-line size is 3/8–in. O.D. for all residential applications.

IMPORTANT: Only install the factory-supplied Puron® heat pump (bi-flow) liquid line filter drier. Obtain replacement filter driers from your local distributor.

Manufacturer reserves the right to discontinue, or change at any time, specifications or designs without notice and without incurring obligations.

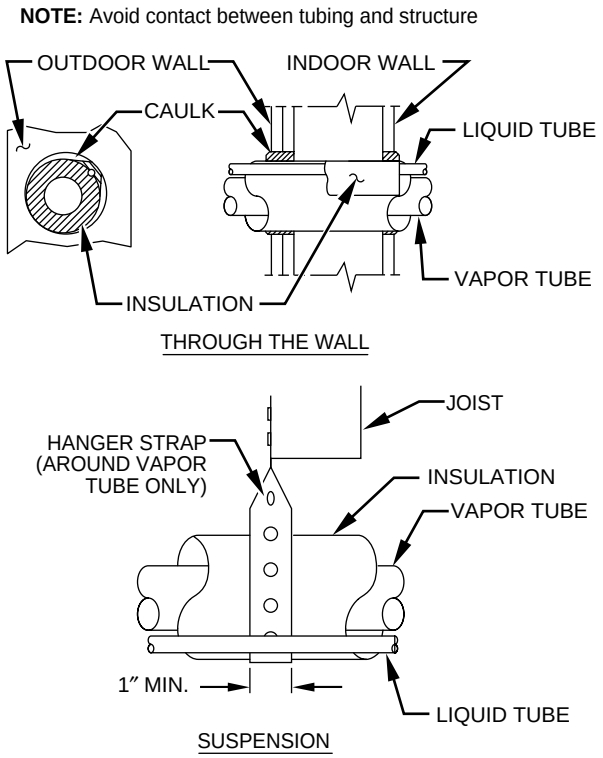

Fig. 2—Connecting Tubing Installation

INSTALLATION

Step 1—Check Equipment and Job Site

UNPACK UNIT

Move to final location. Remove carton, taking care not to damage unit.

INSPECT EQUIPMENT

File claim with shipping company prior to installation if shipment is damaged or incomplete.

Step 2—Install on a Solid, Level Mounting Pad

If conditions or local codes require the unit be attached to pad, tie down bolts should be used and fastened through knockouts provided in unit base pan. Refer to unit mounting pattern in Fig. 3 to determine base pan size and knockout hole location.

On rooftop applications, mount on level platform or frame. Place unit above a load-bearing wall and isolate unit and tubing set from structure. Arrange supporting members to adequately support unit and minimize transmission of vibration to building. Consult local codes governing rooftop applications.

⚠ CAUTION

Do not allow POE lubricant to come into contact with roofing material. POE may deteriorate certain types of synthetic roofing.

NOTE: Unit must be level to within ±2° (±3/8 in./ft).

Step 3—Clearance Requirements

When installing, allow sufficient space for airflow clearance, wiring, refrigerant piping, and service. Allow 30-in. clearance to service end of unit and 48 in. above unit. For proper airflow, a 6-in. clearance on 1 side of unit and 12 in. on all remaining sides must be maintained. Maintain a distance of 24 in. between units. Position so water, snow, or ice from roof or eaves cannot fall directly on unit.

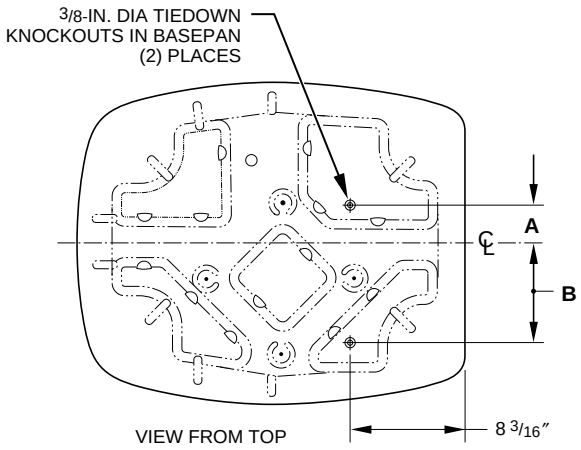

UNIT SIZE	MINIMUM MOUNTING PAD DIMENSIONS		TIEDOWN KNOCKOUT LOCATIONS	
	Support Feet	Snow Stand	A	B
024	19 X 24	26 X 32	2-13/16	6-15/16
036-060	26 X 32	31 X 35	4	9-3/4

→ **Fig. 3—Mounting Unit to Pad**

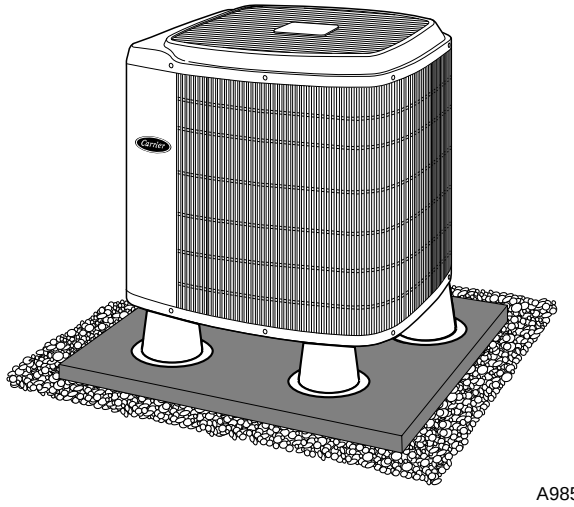

Fig. 4—Accessory Support Feet

On rooftop applications, locate unit at least 6 in. above roof surface.

Step 4—Operating Ambient

The minimum outdoor operating ambient in cooling mode is 55°F, and the maximum outdoor operating ambient in cooling mode is 125°F.

→ Step 5—Elevate Unit

⚠ CAUTION

Accumulation of water and ice in base pan may cause equipment damage.

Elevate unit per local climate and code requirements to provide clearance above estimated snowfall level and ensure adequate

drainage of the unit. Fig. 4 shows unit with accessory support feet installed. Use accessory snow stand in areas where prolonged freezing temperatures are encountered. Refer to separate Installation Instructions packaged with accessories.

Step 6—Check Indoor Expansion Device

⚠ CAUTION

For proper unit operation and reliability, units must be installed with factory-supplied balance port hard shutoff TXV specifically designed to operate with Puron® two-speed unit. Do not install with evaporator coils having capillary tube metering devices.

FURNACE COILS

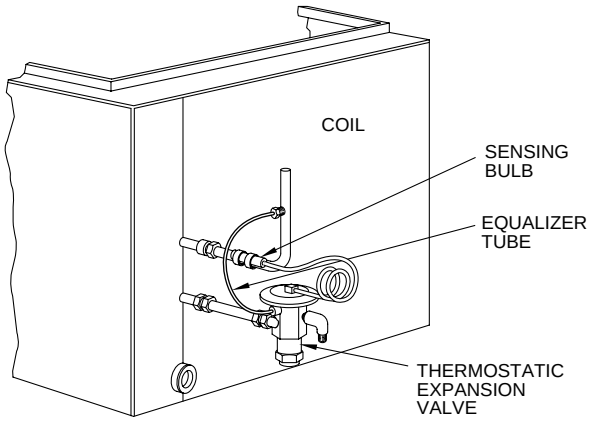

Fig. 5—TXV Installed

Remove existing AccuRater® piston from indoor coil and install factory-supplied TXV.

IMPORTANT: The TXV should be mounted as close to the indoor coil as possible and in a vertical, upright position. Avoid mounting the inlet tube vertically down. A factory-supplied or approved filter drier must be installed in the liquid line.

Install TXV kit to indoor coil as follows:

Installing TXV in Place of Piston

1. Ensure coil has not been exposed to refrigerant pressure.
2. Remove indoor coil inlet tube at piston body inlet. Use back-up wrench to prevent damage.
3. Remove piston retainer, being careful not to damage sealing surface of O-ring.
4. Remove and discard factory-installed piston. (Replace retainer if O-ring is damaged.)
5. Reinstall piston retainer in piston body.
6. Replace indoor coil inlet tube. Use back-up wrench to prevent damage.

⚠ CAUTION

To prevent damage to the unit, use a brazing shield and wrap TXV with wet cloth.

7. Sweat swivel adapter (See Fig. 6D) to inlet of indoor coil and attach to TXV (See Fig. 6A) outlet. Use backup wrench to avoid damage to tubing or valve. Sweat inlet of TXV, marked "IN," to liquid line. Avoid excessive heat which could damage valve.
8. Install vapor elbow (See Fig. 6B) with equalizer adapter to suction tube of line set and suction connection to indoor coil. Adapter has a 1/4-in. male flare connector for attaching equalizer tube.
9. Connect equalizer tube of TXV to 1/4-in. equalizer fitting on vapor line adapter.
10. Attach TXV bulb to horizontal section of suction line using nylon bulb clamps provided. (See Fig. 6C.) Insulate bulb with factory-supplied insulation tape (See Fig. 6E). See Fig. 7 for correct positioning of sensing bulb.
11. Proceed with remainder of unit installation.

FAN COILS

Indoor unit (fan coil) does NOT contain a balance port hard shut-off TXV specifically designed for Puron® two-speed TXV. **Changeout is required**.

Replacing R-22 TXV or Non-Balance Port Puron® TXV on Indoor Coil

1. Pump system down to 2 psig and recover refrigerant.
2. Remove coil access panel and fitting door from cabinet.
3. Remove and save TXV support clamp using a 5/16-in. nut driver.
4. Remove TXV using a backup wrench on flare connections to prevent damage to tubing.
5. Using wire cutters, cut equalizer tube off flush with vapor tube inside cabinet.
6. Remove bulb from vapor tube inside cabinet.
7. Braze equalizer stub-tube closed. Use protective barrier as necessary to prevent damage to drain pan.

IMPORTANT: Route the equalizer tube of approved factory supplied Puron® TXV through suction line connection opening in fitting door prior to replacing fitting panel around tubing.

8. Install TXV (Fig. 6A) with 3/8-in. copper inlet tube through small hole in service panel. Use wrench and backup wrench, to avoid damage to tubing valve.
9. Reinstall TXV support clamp (removed in item 3).
10. Attach TXV bulb to vapor tube inside cabinet in same location as original was removed using supplied nylon bulb clamps (See Fig. 6C). Insulate bulb with factory-supplied insulation tape (See Fig. 6E). See Fig. 7 for correct positioning of sensing bulb.

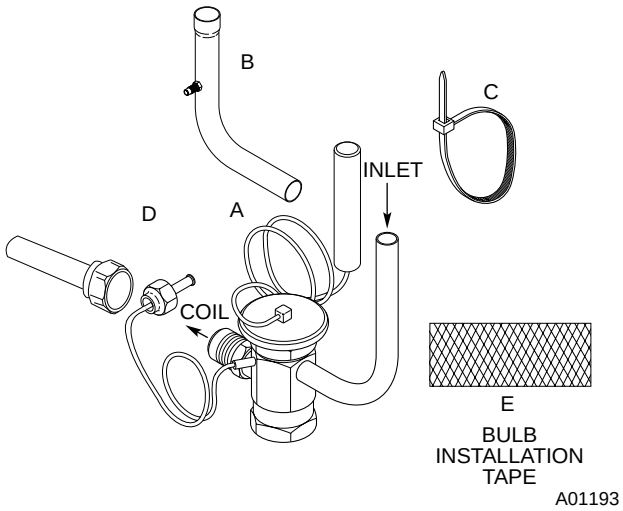

Fig. 6—TXV Kit Contents

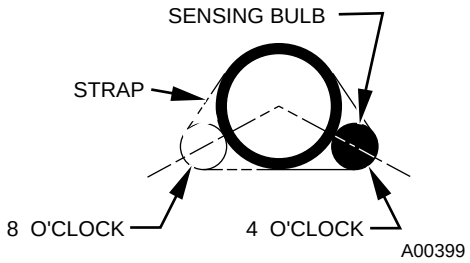

Fig. 7—Positioning of Sensing Bulb

11. Route equalizer tube through suction connection opening (large hole) in fitting panel and install fitting panel in place.
12. Sweat inlet of TXV, marked "IN," to liquid line. Avoid excessive heat which could damage valve.
13. Install vapor elbow (See Fig. 6B) with equalizer adapter to vapor line of line set and vapor connection to indoor coil. Adapter has a 1/4-in. male flare connector for attaching equalizer tube. (See Fig. 6B.)
14. Connect equalizer tube of TXV to 1/4-in. equalizer fitting on vapor line adapter. Use backup wrench to prevent damage to equalizer fitting.
15. Proceed with remainder of unit installation.

→ LONG-LINE APPLICATIONS, INSTALL LIQUID-LINE SOLENOID VALVE (LSV)

For refrigerant piping arrangements with equivalent lengths greater than 50 ft or when elevation difference between indoor and/or outdoor unit is greater than ± 20 ft, follow all requirements of the Long-Line Guideline section in the Application Guideline and Service Manual—Air Conditioners and Heat Pumps Using Puron® Refrigerant. If required by Long-Line Application Guideline, install LSV kit P/N KHALS0401LLS specifically designed for Puron® Heat Pump. LSV should be installed between filter drier and indoor coil as close as possible to outdoor unit (within 2 feet). (See Fig. 12 for wiring diagram.) Follow the Installation Instructions included with accessory kit.

IMPORTANT: Flow arrow must point toward outdoor unit.

Step 7—Make Piping Connections

⚠ WARNING

Relieve pressure and recover all refrigerant before system repair or final unit disposal to avoid personal injury or death. Use all service ports and open all flow-control devices, including solenoid valves.

⚠ CAUTION

Do not leave system open to atmosphere any longer than minimum required for installation. POE oil in compressor is extremely susceptible to moisture absorption. Always keep ends of tubing sealed during installation.

⚠ CAUTION

If ANY refrigerant tubing is buried, provide a 6 in. vertical rise at service valve. Refrigerant tubing lengths up to 36 in. may be buried without further special consideration. Do not bury lines for lengths over 36 in.

Outdoor units may be connected to indoor section using accessory tubing package or field-supplied refrigerant grade tubing of correct size and condition. Tubing diameters listed in Table 1 are adequate for equivalent lengths up to 50 ft For tubing requirements beyond 50 ft, substantial capacity and performance losses will occur. Follow the recommendations in the Application Guideline and Service Manual—Air Conditioners and Heat Pumps Using Puron® Refrigerant to minimize losses.

Refer to Table 1 for field tubing diameters. Refer to Table 2 for accessory requirements.

Table 1—Refrigerant Connections and Recommended Liquid and Vapor Tube Diameters (In.)

UNIT	LIQUID		VAPOR		VAPOR (LONG-LINE)	
SIZE	Connection Diameter	Tube Diameter	Connection Diameter	Tube Diameter	Connection Diameter	Tube Diameter
024	3/8	3/8	5/8	5/8	5/8	3/4
036	3/8	3/8	3/4	3/4	3/4	7/8
037,048	3/8	3/8	7/8	7/8	7/8	7/8
060	3/8	3/8	7/8	1-1/8	7/8	1-1/8

Notes:
1. Tube diameters are for lengths up to 50 equivalent ft
2. Do not increase or decrease tubing sizes.

If refrigerant tubes or indoor coil are exposed to atmosphere, they must be evacuated to 500 microns to eliminate contamination and moisture in the system.

OUTDOOR UNIT CONNECTED TO FACTORY-APPROVED INDOOR UNIT

These outdoor units are carefully evaluated and listed with specific indoor coils for proper system performance.

IMPORTANT: Do not apply to indoor coils that are not factory approved combinations.

INSTALL ADAPTER TUBE

1. Remove plastic retainer holding outdoor piston in liquid line service valve.
2. Check to be sure outdoor piston is properly installed in liquid line service valve.
3. Locate plastic bag taped to unit containing adapter tube.
4. Remove Teflon washer from bag and install on open end of liquid service valve.
5. Remove adapter tube from bag and connect threaded nut to liquid service valve. Tighten nut finger tight and then with wrench an additional 1/2 turn (15 ft-lb). DO NOT OVER-TIGHTEN!

REFRIGERANT TUBING AND FILTER DRIER

⚠ CAUTION

Installation of filter drier in liquid line is required.

Connect vapor tubing to fittings on outdoor unit vapor service valve. Connect liquid tubing to filter drier. (See Table 1 and Fig. 9.) Connect other end of filter drier to adapter tube on liquid line service valve.

→ **Table 2—Accessory Usage**

ACCESSORY	REQUIRED FOR LONG-LINE APPLICATIONS* (OVER 50 FT)	REQUIRED FOR SEACOAST APPLICATIONS (WITHIN 2 MILES)
Coastal Filter	No	Yes
Support Feet	No	Recommended
Puron® Balance-Port Hard Shutoff TXV	Yes†	Yes†
Puron® Liquid-Line Solenoid Valve for Heating	KHALS0401LLS	No

* For tubing line sets between 50 and 175 ft, for 20 ft vertical differential refer to Application Guideline and Service Manual—Air Conditioners and Heat Pumps Using Puron® Refrigerant. Crankcase heater and start assist are standard on two-speed units.
†Required for all applications. Factory supplied with outdoor unit.

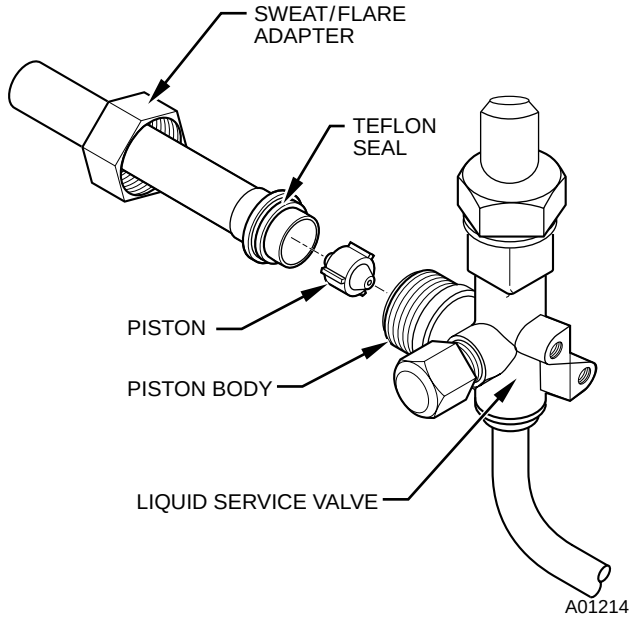

Fig. 8—Liquid Service Valve with Sweat Adapter Tube

SWEAT CONNECTION

⚠ CAUTION

To prevent damage to unit or service valves, observe the following:
• Use a brazing shield.
• Wrap service valves with wet cloth or use a heat sink material.

Braze sweat connections using industry accepted methods and materials. Do not use soft solder (materials which melt below 800°F). Consult local code requirements.

LEAK CHECKING

Leak test all joints in indoor, outdoor, and refrigerant tubing.

EVACUATE REFRIGERANT TUBING AND INDOOR COIL

⚠ CAUTION

Never use the system compressor as a vacuum pump.

Refrigerant tubes and indoor coil must be evacuated to 500 microns.

IMPORTANT: Never open system under vacuum to atmosphere without first breaking it open with nitrogen.

Deep Vacuum Method

The deep vacuum method requires a vacuum pump capable of pulling a minimum vacuum of 500 microns and a vacuum gage or thermistor capable of accurately measuring this vacuum depth. The deep vacuum method is the most positive way of assuring a system is free of air and liquid water. (See Fig. 10.)

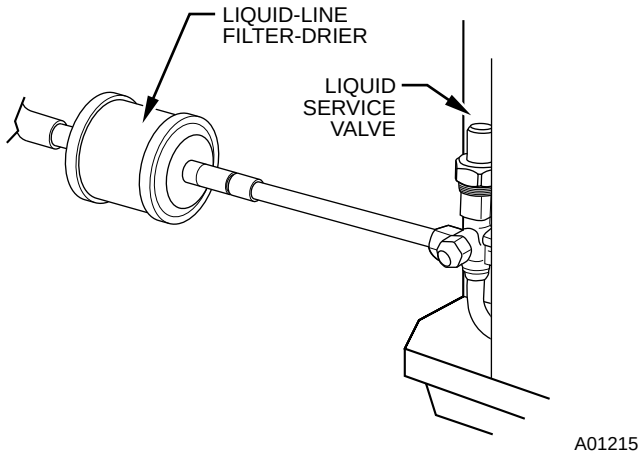

Fig. 9—Filter Drier with Sweat Adapter Tube and Liquid Tube

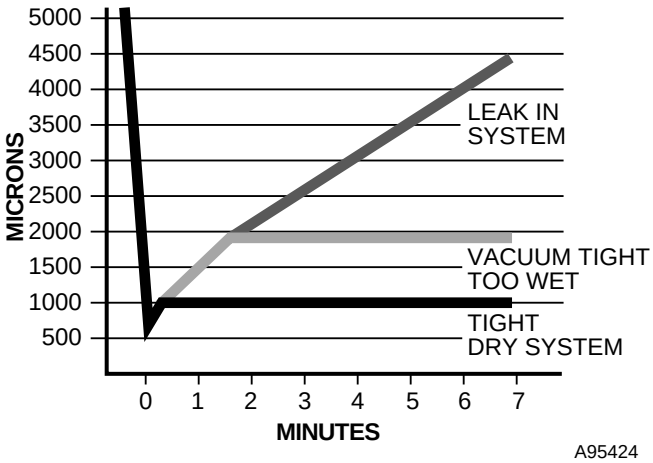

Fig. 10—Deep Vacuum Graph

FINAL TUBING CHECK

IMPORTANT: Check to be certain factory tubing on both indoor and outdoor unit has not shifted during shipment. Ensure tubes are not rubbing against each other or any sheet metal. Pay close attention to feeder tubes, making sure wire ties on feeder tubes are secure and tight.

Step 8—Make Electrical Connections

⚠ WARNING

To avoid personal injury or death, do not supply power to unit with compressor terminal box cover removed.

Be sure field wiring complies with local and national fire, safety, and electrical codes, and voltage to system is within limits shown on unit rating plate. Contact local power company for correction of improper voltage. See unit rating plate for recommended circuit protection device.

NOTE: Operation of unit on improper line voltage constitutes abuse and could affect unit reliability. See unit rating plate. Do not install unit in system where voltage may fluctuate above or below permissible limits.

NOTE: Use copper wire only between disconnect switch and unit.

NOTE: Install branch circuit disconnect of adequate size per NEC to handle unit starting current. Locate disconnect within sight from and readily accessible from unit, per Section 440-14 of NEC.

ROUTE GROUND AND POWER WIRES

Remove access panel and control box cover to gain access to unit wiring. Extend wires from disconnect through power wiring hole provided and into unit control box. Size wires per NEC but not smaller than minimum wire size shown in Product Data Digest.

⚠ WARNING

The unit cabinet must have as uninterrupted or unbroken ground to minimize personal injury if an electrical fault should occur. The ground may consist of electrical wire or metal conduit when installed in accordance with existing electrical codes. Failure to follow this warning can result in an electric shock, fire, or death.

CONNECT GROUND AND POWER WIRES

Connect ground wire to ground connection in control box for safety. Connect power wiring to leads provided as shown in Fig. 11.

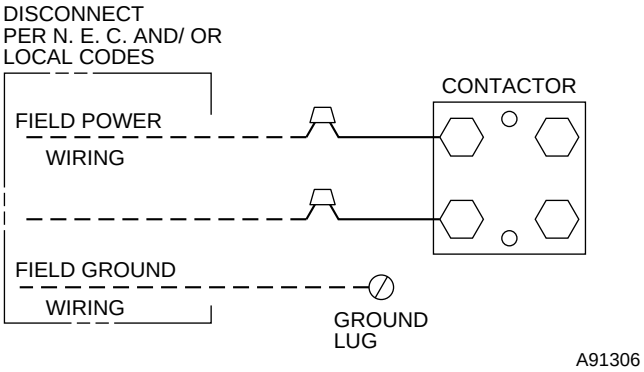

Fig. 11—Line Power Connections

CONNECT CONTROL WIRING

Route 24v control wires through control wiring grommet and connect to leads provided in control box.

Use No. 18 AWG color-coded, insulated (35°C minimum) wire. If thermostat is located more than 100 ft from unit, as measured along the control voltage wires, use No. 16 AWG color-coded wire to avoid excessive voltage drop.

All wiring must be NEC Class 1 and must be separated from incoming power leads.

The outdoor unit requires a minimum of 27-va, 24v control power.

FINAL WIRING CHECK

IMPORTANT: Check factory wiring and wire connections to ensure terminations are secured properly. Check wire routing to ensure wires are not in contact with tubing, sheet metal, etc.

Step 9—Install Electrical Accessories

GENERAL

Refer to the individual instructions packaged with kits or accessories when installing.

Available electrical accessories include latent capacity control.

LATENT CAPACITY CONTROL (LCC)

The purpose of an LCC is to provide a dehumidification mode to assure a 75 percent or less system sensible heat ratio. If indoor unit installed contains an ICM blower (such as an FK4, FV4, or 40FK fan coil or a 58UHV, 58UXV, or 58MVP gas furnace), no LCC is required. The LCC for standard PSC blower products consists of a standard humidistat which opens contacts on humidity rise and a pilot duty relay with 24v coil.

NOTE: If an LCC is desired, low-speed airflow must be maintained so that a minimum of 300 CFM/ton can be supplied during high-speed LCC operation.

Step 10—Make Airflow Selections

AIRFLOW SELECTION FOR 58UHV, 58UXV FURNACES

The 58UHV, 58UXV Non-Condensing Variable-Speed Furnaces provide high- and low-speed blower operation to match the capacities of compressor high and low speeds. To select recommended airflow, refer to the 58UHV, 58UXV Installation Instructions. These settings are made on the furnace airflow selector board by moving the appropriate color-coded jumper wires. The ORANGE jumper wire should be set to the HP—EFFY position for heat pump best efficiency or HP—CMFT for heat pump enhanced comfort. The YELLOW COOL SIZE jumper is used to select airflow to match the needed tons of cooling. The BLUE CFM/TON jumper wire is used to select slight adjustments to airflow of 400, 350, or 315 CFM per ton. (See Furnace Installation Instructions for setting required for airflow.)

AIRFLOW SELECTION FOR 58MVP FURNACES

The 58MVP Condensing Variable-Speed Furnaces provide high- and low-speed blower operation to match the capacities of compressor at high and low speeds. To select recommended airflow, refer to the 58MVP Installation Instructions. The 58MVP utilizes a control center that allows the installing technician to select proper airflows. For adjustments to the manual switches labeled A/C and CF and recommended switch positions, refer to Furnace Installation Instructions for setting required for airflow. High-speed airflow is determined by the position of the A/C switches, and low-speed airflow is determined by the position of the CF switches.

AIRFLOW SELECTION FOR FK4, FV4, OR 40FK FAN COILS

The FK4, FV4, and 40FK provides high- and low-speed blower operation to match the capacities of compressor at high and low speeds. To select recommended airflow, refer to the FK4, FV4, or 40FK Installation Instructions. The FK4, FV4, and 40FK utilizes an EASY SELECT control board that allows the installing technician to select proper airflows. The ORANGE SYSTEM TYPE JUMPER wire should be set to HP—EFF or HP—COMFORT. The BLUE AC/HP SIZE JUMPER is used to select airflow to match the outdoor unit nominal size in tons of cooling. The BLACK AC/HP CFM ADJUST jumper is used to make slight adjustments to the selected airflow tonnage. (See Furnace Installation Instructions for setting required for airflow.) This fan coil has an adjustable blower off delay factory set at 90 sec. for high- and low-speed blower operation. For other combination of equipment consult the Product Data Digest.

Step 11—Start-Up

⚠ CAUTION

To prevent compressor damage or personal injury, observe the following:
- Do not overcharge system with refrigerant.
- Do not operate unit in a vacuum or at negative pressure.
- Do not disable low-pressure switch.

⚠ CAUTION

To prevent personal injury wear safety glasses, protective clothing, and gloves when handling refrigerant and observe the following:
Back seating service valves are not equipped with Schrader valves. Fully back seat (counter clockwise) valve system before removing gage port cap.

⚠ CAUTION

Do not vent refrigerant to atmosphere. Recover during system repair or final unit disposal.

Follow these steps to properly start up the system:

1. The outdoor unit is equipped with a crankcase heater which operates when the compressor is OFF. Energize crankcase heater 24 hr before starting unit. To energize heater only, set indoor thermostat to OFF position and close power disconnect to unit.

→ **NOTE:** Starting the compressor without a minimum of 12 hr of crankcase heat prior to initial start-up, may result in a compressor chattering noise and possible damage to the compressor.

2. Fully back seat (open) liquid and vapor tube service valves.
3. Unit is shipped with valve stem(s) front seated and caps installed. Replace stem caps after system is opened to refrigerant flow (back seated). Replace caps finger tight and tighten additional 1/12 turn (20 ft-lb torque) with wrench.
4. Close electrical disconnects to energize system.
5. Set room thermostat at desired temperature. Be sure the set point is below indoor ambient and is set low enough to energize desired speed.

NOTE: Carrier electronic thermostats are equipped with a 15-minute staging timer. This timer prevents the dual capacity system from operating at high capacity until unit has been operating in low capacity for 15 minutes unless there is at least a 5°F difference between room temperature and thermostat set point. To force high capacity, adjust the set point at least 5° below room ambient for cooling or 5° above room ambient for heating.

6. Set room thermostat to COOL or HEAT and fan control to AUTO or ON as desired. Wait for appropriate time delay(s). Operate unit for 15 minutes. Check refrigerant charge.

→ **NOTE:** If unit has not operated within the past 12 hr or following a unit power-up, upon the next thermostat high- or low-speed demand, unit operates for a minimum of 5 minutes in high-speed.

Step 12—Check Charge

⚠ WARNING

Service valve gage ports are not equipped with Schrader valves. To prevent personal injury, make sure gage manifold is connected to the valve gage ports before moving valves off fully back seated position. Wear safety glasses and gloves when handling refrigerant.

UNIT CHARGE

Factory charge is shown on unit rating plate. With unit operating, charge Puron® units with liquid using a commercial type metering device manifold hose. Charge refrigerant into suction line. To check charge in cooling mode, refer to Cooling Only Procedure. To check charge in heating mode, refer to Heating Check Chart Procedure.

Adjust charge in both heating and cooling by following procedure shown on charging tables located on pink charging label on back side of access panel.

NOTE: Unit is to be charged in high capacity only. Charging in low capacity may cause damage to the compressor.

COOLING ONLY PROCEDURE

1. Operate unit a minimum of 15 minutes before checking charge.
2. Measure liquid service valve pressure by attaching and insulating an accurate Puron® gage to service port.
3. Measure liquid line temperature by attaching an accurate thermistor type or electronic thermometer to liquid line near outdoor coil.
4. Refer to charging label for required subcooling temperatures.
5. Refer to Table 3. Find the point where required subcooling temperature intersects measured liquid service valve pressure.
6. To obtain required subcooling temperature at a specific liquid line pressure, add refrigerant if liquid line temperature is higher than indicated or reclaim refrigerant if temperature is lower. Allow a tolerance of ± 3°F.

HEATING CHECK CHART PROCEDURE

To check system operation during heating cycle, refer to the Heating Pump Charging Instructions on outdoor unit. This chart indicates whether a correct relationship exists between system operating pressure and air temperature entering indoor and outdoor units. If pressure and temperature do not match on chart, system refrigerant charge may not be correct. Do not use chart to adjust refrigerant charge.

NOTE: In heating mode, check refrigerant charge only when pressures are stable. If operating conditions cause vapor pressure switch and thereby outdoor fan to cycle, check refrigerant charge in cooling or lower indoor dry bulb temperature. If in doubt, remove charge and weigh in correct refrigerant charge.

NOTE: When charging is necessary during heating season, charge must be weighed in accordance with unit rating plate ±0.6 oz/ft of 3/8-in. liquid line above or below 15 ft respectively.

EXAMPLE:

To calculate additional charge required for a 25-ft line set:
25 ft - 15 ft = 10 ft X 0.6 oz/ft = 6 oz of additional charge

Step 13—System Functions and Sequence of Operation

The outdoor unit control system has special functions. The following is an overview of the two-speed control functions:

Table 3—Required Liquid-Line Temperature (°F)

LIQUID PRESSURE AT SERVICE VALVE (PSIG)	REQUIRED SUBCOOLING TEMPERATURE (°F)			
	5	10	15	20
174	56	51	46	41
181	58	53	48	43
188	61	56	51	46
195	63	58	53	48
202	65	60	55	50
209	67	62	57	52
216	69	64	59	54
223	71	66	61	56
230	73	68	63	58
237	75	70	65	60
244	77	72	67	62
251	79	74	69	64
258	81	76	71	66
265	82	77	72	67
272	84	79	74	69
279	86	81	76	71
286	88	86	78	73
293	89	84	79	74
300	91	86	81	76
307	93	88	83	78
314	94	89	84	79
321	96	91	86	81
328	97	92	87	82
335	99	94	89	84
342	100	95	90	85
349	102	97	92	87
356	103	98	93	88
363	105	100	95	90
370	106	101	96	91
377	107	102	97	92
384	109	104	99	94
391	110	105	100	95
398	112	107	102	97
405	113	108	103	98
412	114	109	104	99
419	115	110	105	100
426	117	112	107	102
433	118	113	108	103
440	119	114	109	104
447	120	115	110	105
454	122	117	112	107
461	123	118	113	108
468	124	119	114	109
475	125	120	115	110
482	126	121	116	111
489	127	122	117	112
496	129	124	119	114
503	130	125	120	115
510	131	126	121	116
517	132	127	122	117
524	133	128	123	118
531	134	129	124	119
538	135	130	125	120
545	136	131	126	121
552	137	132	127	122
559	138	133	128	123
566	139	134	129	124
573	140	135	130	125
580	141	136	131	126
587	142	137	132	127
594	143	138	133	128
601	144	139	134	129
608	145	140	135	130

COOLING OPERATION

This product utilizes a 2-stage cooling indoor thermostat. With a call for first stage cooling (Yl), the outdoor fan and low capacity compressor are energized. If low capacity cannot satisfy cooling demand, high capacity is energized (Yl and Y2 or just Y2) by the second stage of indoor thermostat. After second stage is satisfied, the unit returns to low-capacity operation until first stage is satisfied or until second stage is required again. When both first stage and second stage cooling are satisfied, the compressor will shut off.

→ **NOTE:** If unit has not operated within the past 12 hr, or following a unit power-up, upon the next thermostat high- or low-speed demand, unit operates for a minimum of 5 minutes on high speed.

NOTE: Outdoor fan motor will continue to operate for one minute after compressor shuts off, when outdoor ambient is greater than 100°F.

NOTE: When two-speed unit is operating in low-capacity cooling, system vapor (suction) pressure will be higher than a standard single-speed system or high-speed operation.

HEATING OPERATION

This product utilizes a 3-stage heating indoor thermostat. With a call for first stage heating (Y1), the outdoor fan and low capacity compressor are energized. If low capacity cannot satisfy heating demand, high capacity is energized (Y1 and Y2) by the second stage of the indoor thermostat. Auxiliary or back up heat is controlled by third stage (W1). After second stage of heat is satisfied, the unit returns to low capacity operation until first stage is satisfied or until second stage is required again. When both first stage and second stage heating are satisfied, the compressor will shut off.

→ **NOTE:** If unit has not operated within the past 12 hr, or following a unit power-up, upon the next thermostat high- or low-speed demand, unit operates for a minimum of 5 minutes on high speed.

STATUS FUNCTION LIGHTS

A system control STATUS function light is located on the outdoor unit control board. The STATUS light provides indication signals for several system operations. See Table 4 for codes and definitions. Table 4 also provides the order of signal importance.

NOTE: Only one code will be displayed on the outdoor unit control board (the most recent, with the highest priority).

FACTORY DEFAULTS

Factory defaults have been provided in the event of failure of outdoor air thermistor and/or outdoor coil thermistor. Refer to Table 6 for default and function.

ONE MINUTE SPEED CHANGE TIME DELAY

When compressor changes speeds from high to low or low to high, there is a 1-minute time delay before compressor restarts. The outdoor fan motor remains running.

COMPRESSOR OPERATION

When the compressor operates in second stage operation, the motor rotates clockwise. Both the lower and upper pistons are eccentric with the rotating crankshaft, and both compress refrigerant. When the compressor operates in single stage operation the motor reverses direction (rotates counter-clockwise). The lower piston becomes idle and the upper piston compresses refrigerant. **Compressor rotation is accomplished by reversing the "start" and "run" windings.**

CRANKCASE HEATER OPERATION

The two-speed control board energizes the crankcase heater during unit's off cycle.

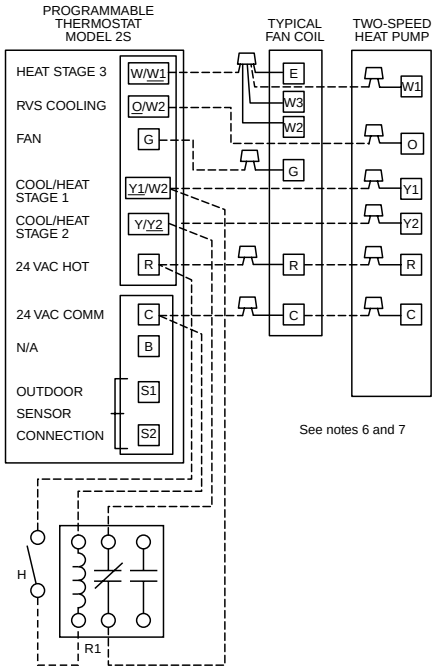

A01165

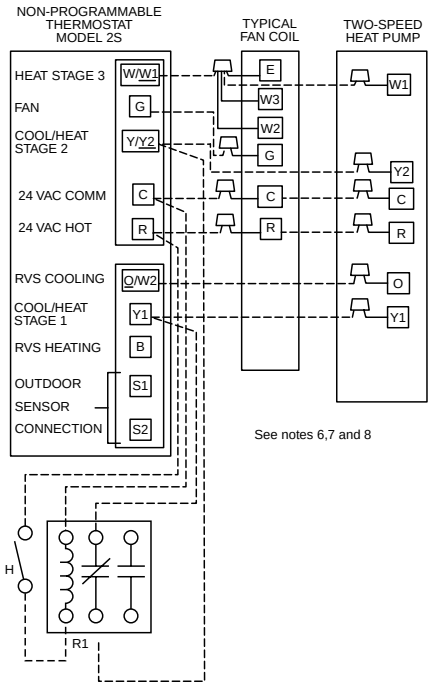

A01166

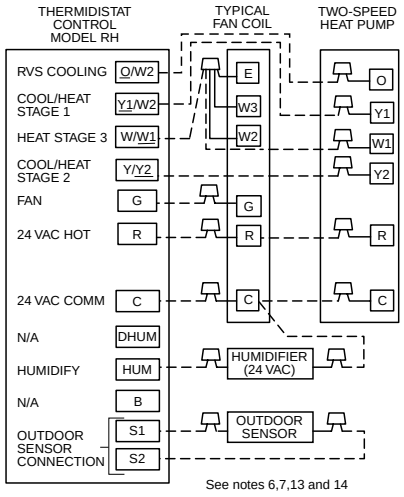

A01167

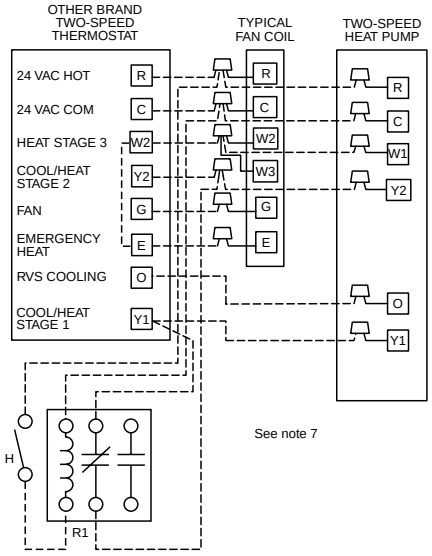

A01168

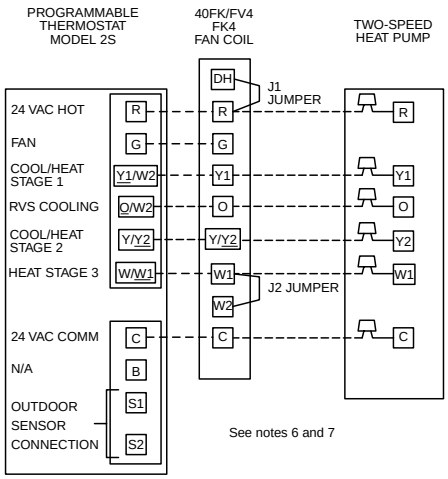

A01169

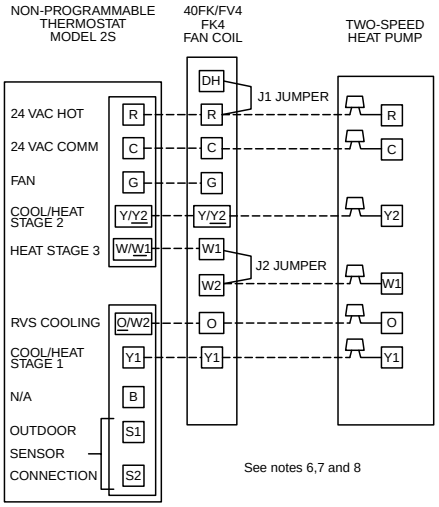

A01170

→ **Fig. 12—Typical 24-V Circuit Connections**

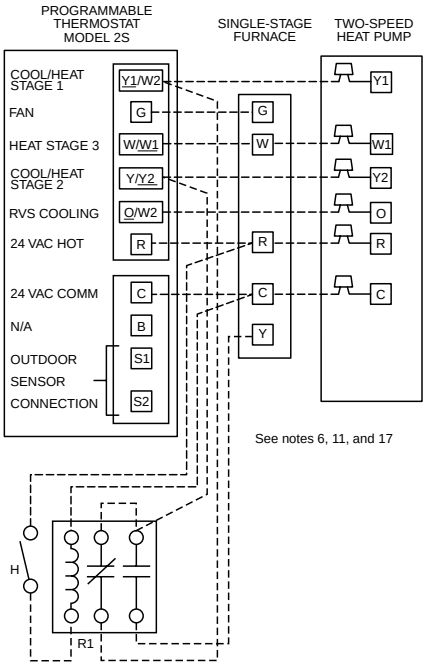

A01174

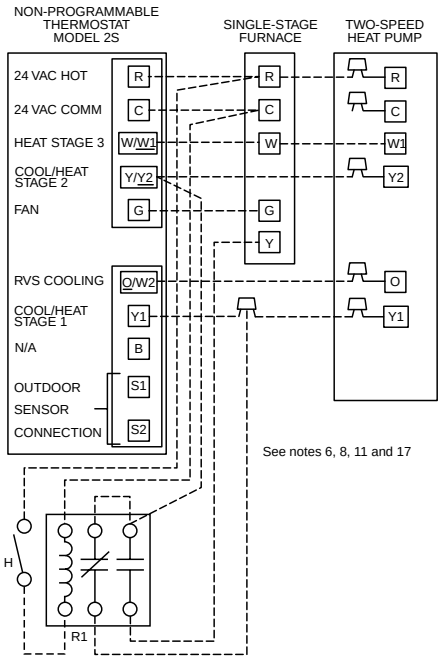

A01175

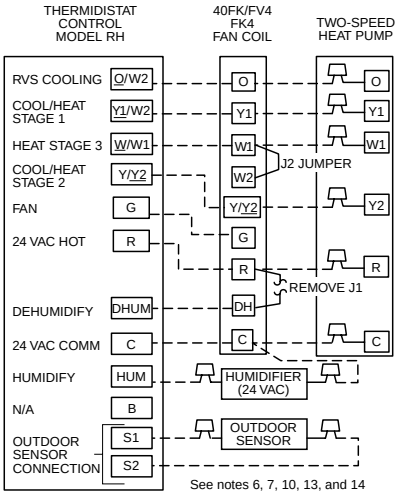

A01171

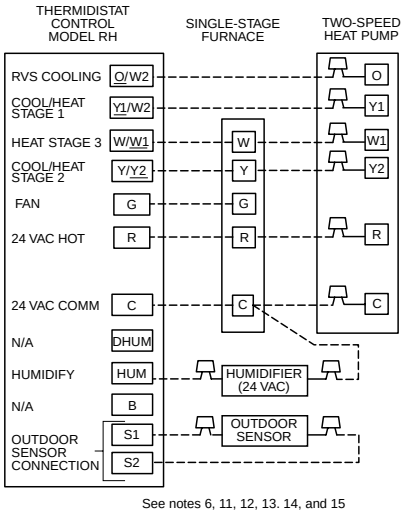

A01176

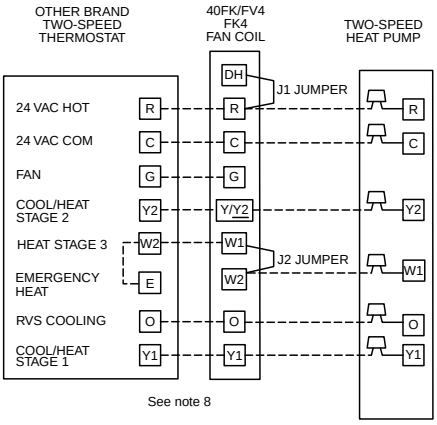

A01172

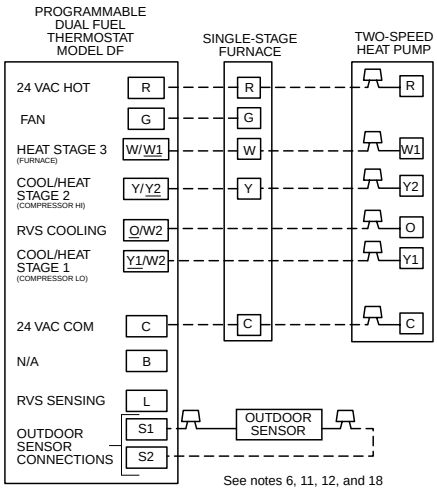

A01178

→ **Fig. 12—Typical 24-V Circuit Connections (Cont'd)**

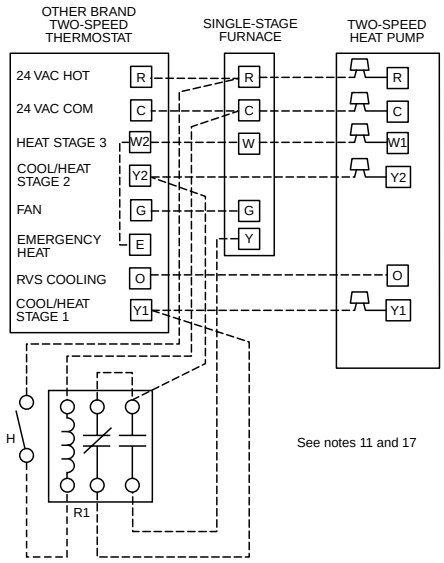

A01179

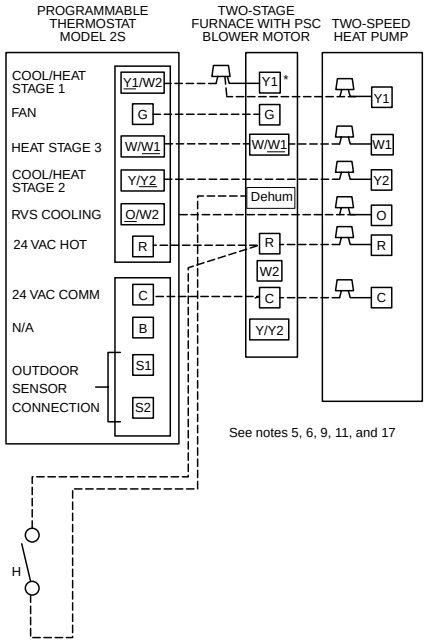

A01180

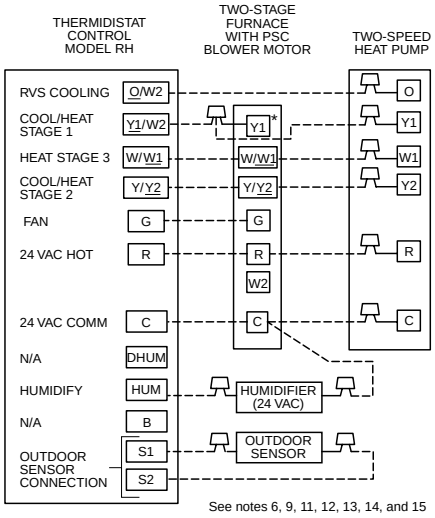

A01182

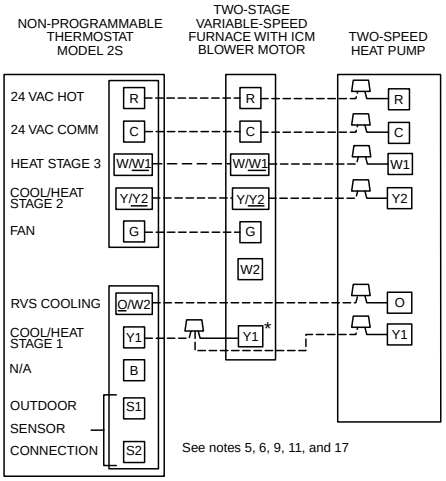

A01184

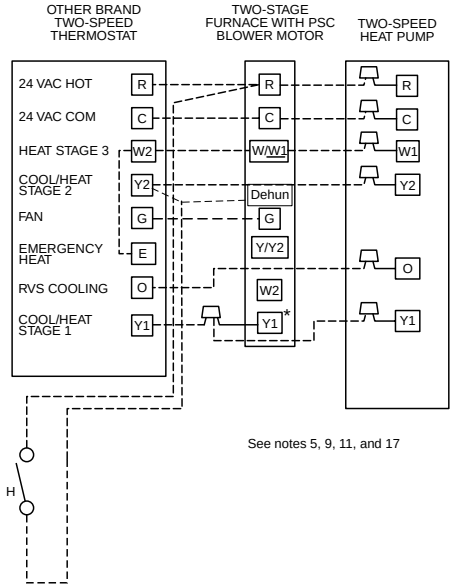

A01183

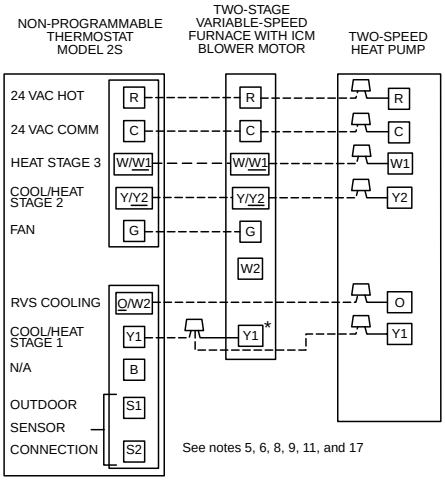

A01185

→ **Fig. 12—Typical 24-V Circuit Connections (Cont'd)**

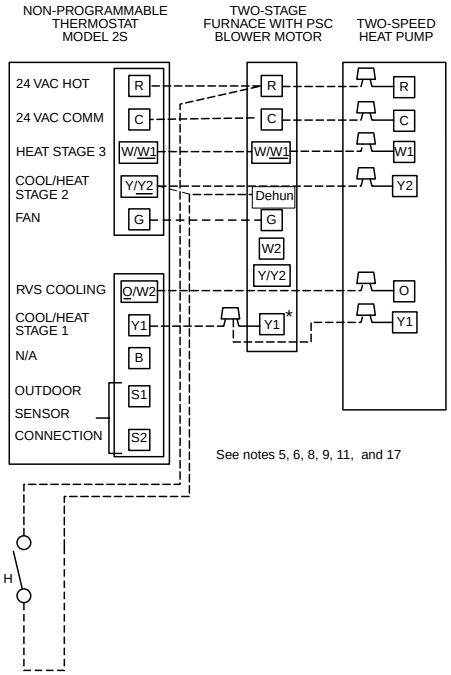

A01181

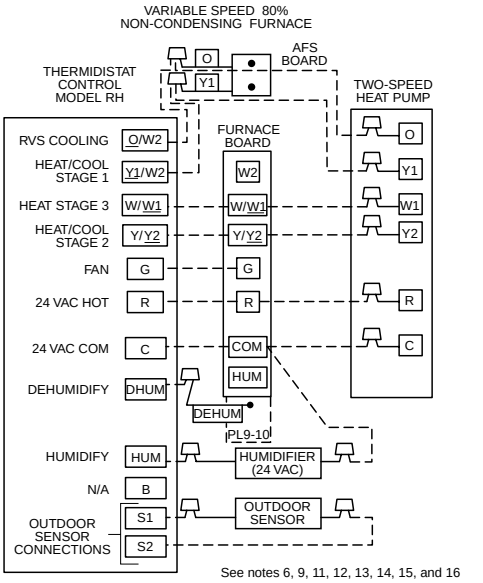

A01188

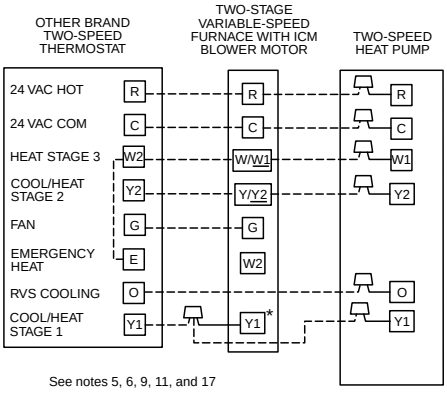

A01187

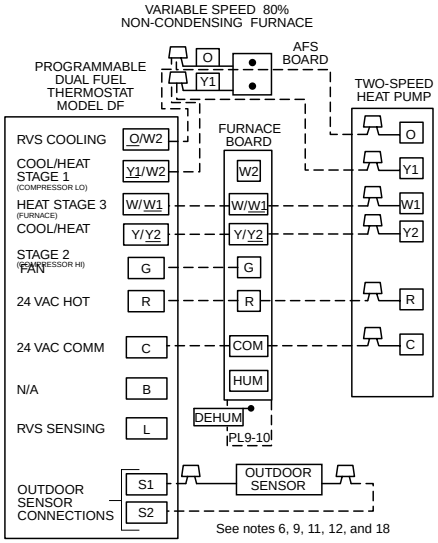

A01189

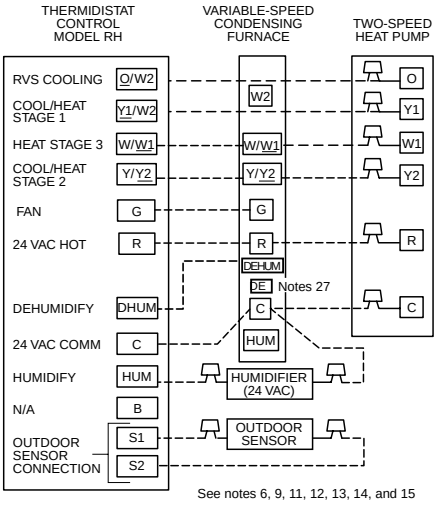

A01190

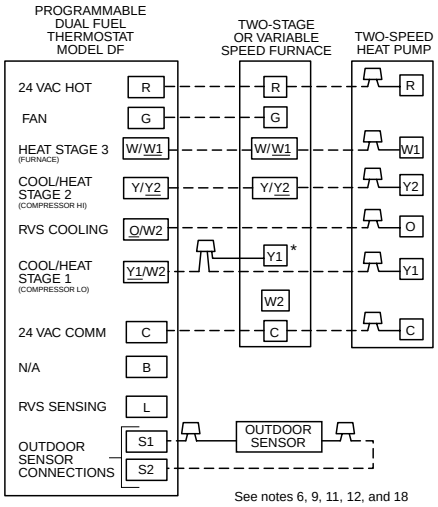

A01186

→ **Fig. 12—Typical 24-V Circuit Connections (Cont'd)**

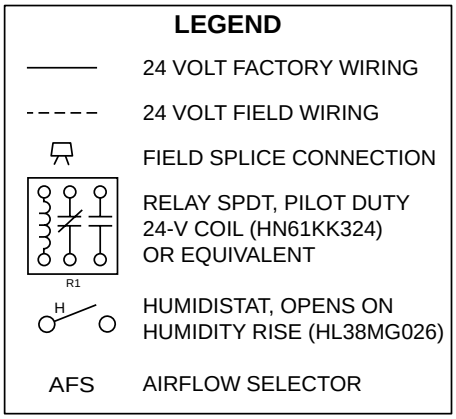

A01222

→ WIRING DIAGRAM NOTES:

1. Wiring must conform to NEC or local codes.
2. Connect 24v field wiring to factory-provided stripped leads.
3. Thermostats are factory configured with 5-minute compressor cycle protection and 4 cycles per hr limit. See thermostat Installation Instructions for details.
4. To stage electric resistance heat, consult outdoor thermostat Installation Instructions.
5. Terminals' marked with an * may not be present on equipment and/or thermostat.
6. Underlined letter on dual terminal indicates its usage. For example: O/W2 means O is energized in cooling mode.
7. Refer to fan coil Installation Instructions for features and additional wiring information.
8. Non-Programmable model 2S, when used in heat pump installations (Jumper R19 NOT cut), uses O/W2 to control reversing valve.
9. Furnace must control its own second-stage operation via furnace control algorithm. Refer to furnace Installations Instructions for proper setup.
10. To activate dehumidify function on FK4, FV4, or 40FK, remove J1 jumper at fan coil control board.
11. Heat pump MUST have a high-pressure switch for dual fuel applications.
12. Outdoor air temperature sensor must be attached in all dual fuel applications.
13. Thermidistat Dip Switch 1 should be set in ON position for heat pump installations.
14. Thermidistat Dip Switch 2 should be set in the ON position for dual capacity compressor operation.
15. Thermidistat Configuration Option No. 10 "Dual Fuel Selection" must be turned on in all dual fuel applications.
16. To activate dehumidify feature on current style 58UHV, 58UXV variable-speed 80 percent non-condensing furnaces, disconnect green (dehum) wire from G on furnace control board and connect to dehumidify terminal dhu on thermidistat.
17. Select Defrost Time on dual capacity heat pump control board.
18. Dual fuel thermostat Dip Switch D should be set in the ON position for dual capacity compressor operation. This thermostat controls dual fuel operation.
19. The DE jumper located next to the DEHUM terminal must be removed to enable the DEHUM input.

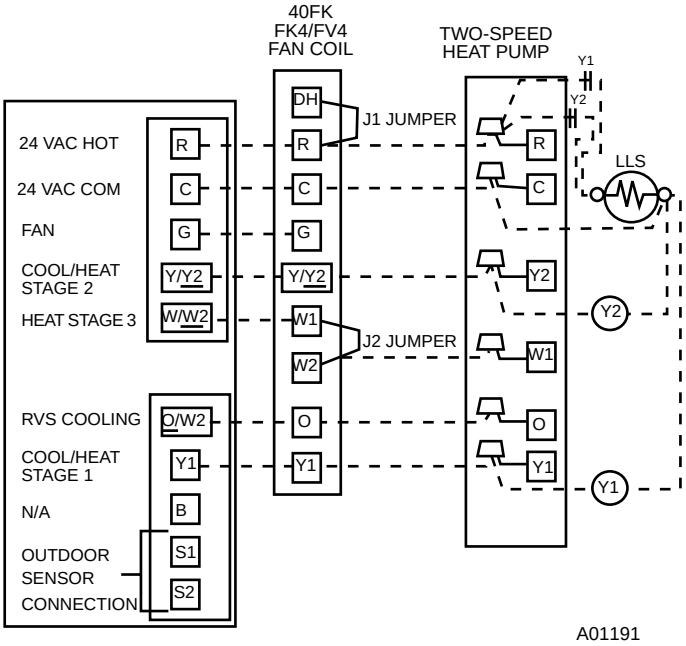

Fig. 13—Typical Solenoid Valve Wiring

OUTDOOR FAN MOTOR OPERATION

The two-speed control energizes outdoor fan any time compressor is operating. The outdoor fan remains energized during the 1-minute compressor speed change time delay and if a pressure switch or compressor overload should open. Outdoor fan motor will continue to operate for one minute after the compressor shuts off when the outdoor ambient is greater than 100°F.

After termination of a defrost cycle, the outdoor fan delays coming on for 20 sec. This allows refrigerant system to recover outdoor coil heat and minimize the "steam cloud" effect.

Table 4—LED Control Function Light Code

CODE	DEFINITION	*
Constant flash No pause	No demand Stand by	10
1 flash w/pause	Low-speed operation	9
2 flashes w/pause	High-speed operation	8
3 flashes w/pause	Outdoor ambient thermistor failure	7
4 flashes w/pause	Outdoor coil thermistor failure	6
3 flashes pause 4 flashes	Thermistor out of range†	5
5 flashes pause 1 flash	Low pressure switch trip	4
5 flashes w/pause 2 flashes	High pressure switch trip	3
6 flashes w/pause	Compressor V_C/V_H trip	2
Constant light No pause No flash	Board failure	1

*Function light signal order of importance in case of multiple signal request; 1 is most important.
†Check both thermistors to determine which is faulty.

Table 5—Defrost Dip Switch Settings

TIME	DIP SWITCH #1	DIP SWITCH #2
30	up	down
60	down	up
90	down	down
120	up	up

DEFROST TIME SELECTION

The defrost interval can be field selected, dependent on local or geographical requirements. It is factory set at 90 minutes but can be changed to either 30, 60, or 120 minutes. To select defrost time, set dip switches located on the left side of the unit board (See Fig. 14). See Table 5 for Defrost Dip Switch Settings.

DEFROST

The dual capacity control logic for defrost function is time and temperature initiated, time or temperature terminated.

Defrost only occurs at outdoor temperatures less than 50°F. The control initiates defrost when outdoor coil thermistor is 30°F (±2°) or less, and selected defrost time (interval) has been accumulated during unit operation. Termination occurs when coil thermistor reaches 80°F (±5°) or defrost period reaches a maximum of 10 minutes. Defrost will occur at the compressor capacity that is being called for. During defrost, unit operates in high or low capacity, energizes reversing valve O and auxiliary heat W2, and de-energizes outdoor fan. Upon termination, there is a 20-sec delay in outdoor fan being energized.

FIELD-INITIATED FORCED DEFROST

By placing a jumper across forced defrost terminals (See Fig. 14) for a minimum of 5 sec and then removing it, a defrost cycle can be initiated. The cycle occurs only if outdoor ambient is less than 50°F, regardless of outdoor coil temperature. The cycle terminates when coil thermistor reaches 80°F (±5°) or defrost period reaches a maximum of 10 minutes.

COMPRESSOR VOLTAGE FAILURE (6 FLASHES)

The control senses the voltage of the compressor run winding. If compressor voltage (Vc) is out of range (less than 90v or greater than 600v), control shuts compressor off for 15 minutes with outdoor fan running. After 15 minutes (provided there is a call for Y1 or Y2), control attempts to start compressor. During this time, a code of 6 flashes appears at control board. If Vc trip occurs 3 consecutive times during a Y1 request, then low capacity operation is locked out and control responds to Y2 requests until a reset occurs. If 3 consecutive trips occur in a combination of Yl and Y2 or all Y2 requests, then both low and high capacity operation will be locked out. The compressor voltage failure (6 flashes) can be caused by:

- compressor internal overload trip (refer to Table 7 for correct winding resistance)
- no 208/230 volt power supply to outdoor unit
- failed compressor contactor(s)
- failure of start relay to pick-up properly.
- improper wiring

PRESSURE SWITCH PROTECTION

The outdoor unit is equipped with high- and low-pressure switches. If the control senses the opening of the high or low pressure switch, it will respond as follows:

1. De-energize the compressor hi or low speed contactor.
2. Keep the outdoor fan operating for 15 minutes.
3. Display the appropriate error code on the status light (see Table 4).
4. After a 15 minute delay, if Yl or Y2 inputs are on and the LPS or HPS is reset, energize appropriate compressor contactor, either low or high.
5. If LPS or HPS has not closed after 15 minute delay, outdoor fan is turned off. If the open switch closes anytime after the 15-minute delay, then resume operation on call for Y1 and/or Y2.

HEATING VAPOR PRESSURE SWITCH

(PressureGuard™)

This outdoor unit is equipped with a heating vapor pressure limiting device which cycles the outdoor fan at high ambient heating conditions. The exact ambient at which outdoor fan cycles depends on indoor and outdoor unit sizing. The effect of outdoor fan cycling on HSPF (Heating Seasonal Performance Factor) is insignificant, due to its occurrence at outdoor ambient where building load is very low. Puron® is a high-pressure refrigerant. The purpose of this switch is to provide maximum flexibility and minimum cost for the installer/owner by not requiring special thicker wall vapor tubing and indoor coils, thus allowing limited retrofit. The use of this switch also allows the maximum number of indoor coil choices at minimum cost for the installer/owner, since it can use standard refrigerant tubing.

NOTE: Due to the presence of a vapor pressure switch in outdoor unit fan circuit and the possibility of fan cycling, this unit may go into brief defrost at high ambient heating conditions.

MAJOR COMPONENTS

→ Two-Speed Control

The two-speed control board controls the following functions:

- Low- and high-compressor contactor operation
- Outdoor fan motor operation
- Crankcase heater operation
- Compressor protection
- Pressure switch monitoring
- Time delays
- Time/temperature defrost
- Defrost interval selection
- Electric heat operation during defrost mode

Field Connections

The two-speed control received 24vac low-voltage control system inputs through the screw connections on the left side of the control board.

Dual Capacity Compressor

The dual capacity compressor contains motor windings that provide 3500 RPM operation. Refer to Table 7 for correct winding resistance.

Compressor Internal Relief

The compressor is protected by an internal pressure relief (IPR) which relieves discharge gas into compressor shell when differential between suction and discharge pressures exceeds 525 psi. The compressor is also protected by an internal overload attached to motor windings.

Compressor Control Contactors

Low and high capacity contactor coils are 24 volts. The electronic control board controls the operation of the low speed (C-L) and the high speed (C-H) contactors.

TEMPERATURE THERMISTORS

Thermistors are electronic devices which sense temperature. As the temperature increases, the resistance decreases. Thermistors are used to sense outdoor ambient and coil temperature. Refer to Fig. 15 for resistance values versus temperature.

Table 6—Factory Defaults

FAILED COMPONENT	FUNCTION	DEFAULT
Ambient Thermistor	Defrost Initiation	Defrost is initiated based on coil temperature and time.
	One minute fan off delay in cooling greater than or equal to 100°F	No delay function
Outdoor Coil Thermistor	Defrost Initiation and Termination	Defrost occurs at each time interval, but terminate after 5 minutes

→ **Table 7—Two-Speed Compressor (Winding Resistance at 70°F ± 20°)**

WINDING	024	036/037	048	060
Start (S-C)	2.280	1.850	1.459	0.740
Run (R-C)	0.770	0.745	0.552	0.356

If the outdoor ambient thermistor or coil thermistor should fail, a fault code appears at electronic control. The crankcase heater is turned on during all off cycles.

IMPORTANT: OUTDOOR AIR THERMISTOR PLACEMENT Mount outdoor air thermistor underneath unit base pan lip on control box side of unit as shown in Fig. 16. Attach to base pan with adhesive tape. A small piece of TXV bulb insulation tape may be used.

IMPORTANT: If outdoor air thermistor is not properly placed underneath base pan, unit may have nuisance thermistor out of range faults.

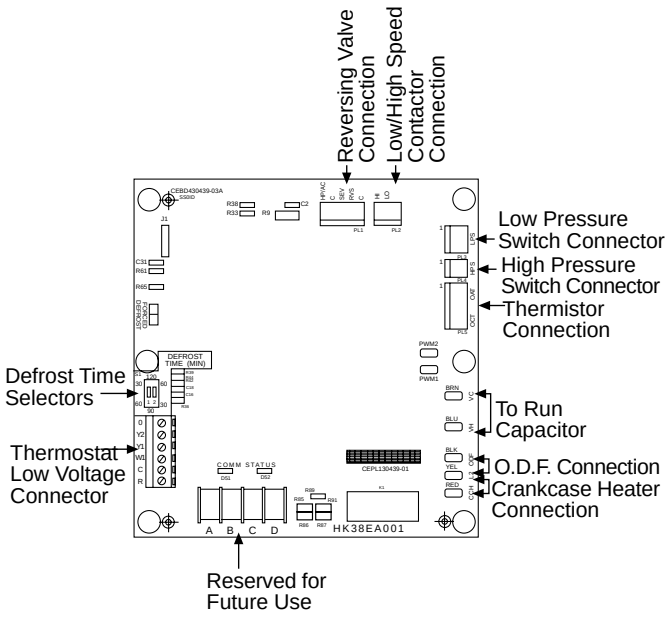

Fig. 14—Control Board

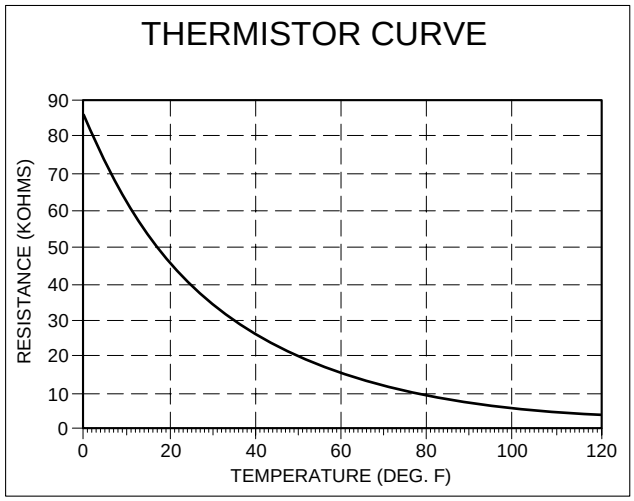

Fig. 15—Resistance Values Versus Temperature

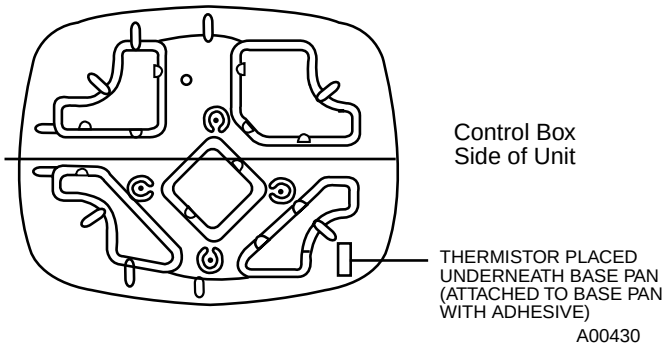

Fig. 16—View from Top of Base Pan

Step 14—Final Checks

IMPORTANT: Before leaving job, be sure to do the following:

1. Ensure that all wiring and tubing is secure in unit before adding panels and covers. Securely fasten all panels and covers.
2. Tighten service valve stem caps to 1/12-turn past finger tight.
3. Leave User's Manual with owner. Explain system operation and periodic maintenance requirements outlined in manual.
4. Fill out Dealer Installation Checklist and place in customer file.

CARE AND MAINTENANCE

For continuing high performance and to minimize possible equipment failure, periodic maintenance must be performed on this equipment. Frequency of maintenance may vary depending upon geographic areas, such as coastal applications.

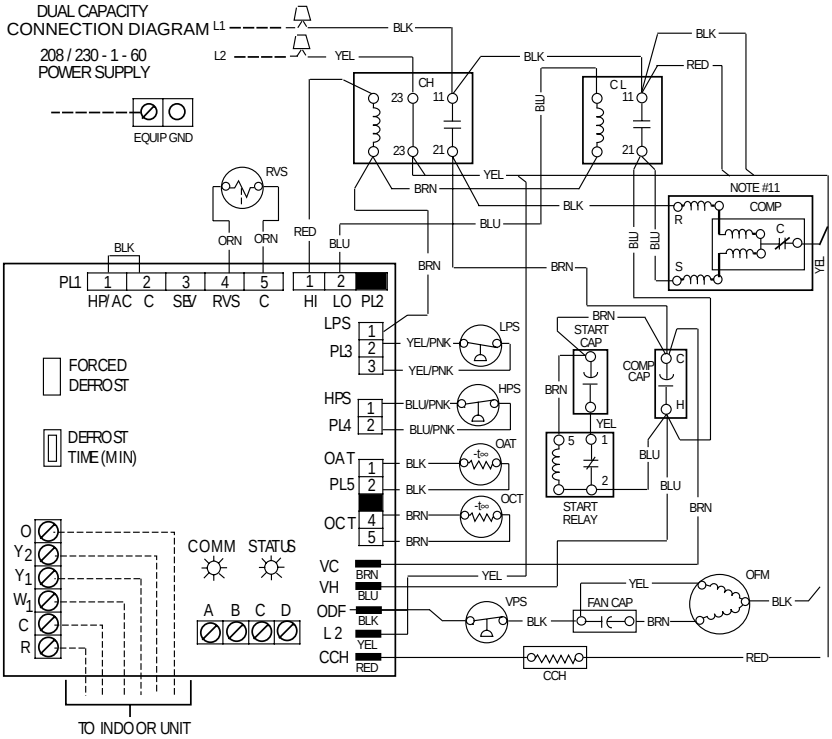

→ **Fig. 17—Wiring Diagram—024, 036, 048**

Copyright 2001 CARRIER Corp. • 7310 W. Morris St. • Indianapolis, IN 46231

Manufacturer reserves the right to discontinue, or change at any time, specifications or designs without notice and without incurring obligations.