**45VMI**
**VRF 1 Way Cassette**
**45VMI015---3**

# Submittal Data

Job Name_____ Location_____
Tag _____

A261086

**Fig. 1 – 1 Way Cassette**

## VRF 1 Way Cassette Features

- A wired remote control, available as an accessory (optional to the customer), displays either °F or °C.
- Indoor units are powered from a dedicated power supply (not powered by outdoor unit).
- Internally Installed A2L Refrigerant Leak Sensor.
- The system will utilize R-454B as a refrigerant.

| **UNIT MODEL** | 45VMI015---3 | |
|---|---|---|
| **PERFORMANCE** | | |
| Cooling Capacity | Btu/h | 15,000 |
| Heating Capacity | Btu/h | 17,000 |
| Airflow Level (Highest to Lowest) | CFM | 503/465/426/388/349/311/272 |
| Sound Pressure Level (Highest to Lowest) | dBA | 41/39/37/35/34/32/31 |
| **ELECTRICAL** | | |
| Power Supply | V/Ph/Hz | 208-230/1/60 |
| Motor Output | W | 35 |
| Motor Type | | DC |
| Minimum Circuit Amps (MCA) | A | 0.65 |
| Maximum Overcurrent Protection (MOP) | A | 15 |

| **PHYSICAL DATA** | | |
|---|---|---|
| Pipe Connection Size - Liquid (High Pressure) | in. | 1/4 |
| Pipe Connection Size - Gas (Low Pressure) | in. | 1/2 |
| Pipe Connection Size - Drain | in. | 1 |
| Refrigerant | | R-454B |
| Unit Width | in. | 47-1/4 |
| Unit Height | in. | 5-1/8 |
| Unit Depth | in. | 16-3/4 |
| Unit Net Weight | lbs. | 32.41 |
| Panel Width | in. | 58-1/4 |
| Panel Height | in. | 2-1/2 |
| Panel Depth | in. | 18-11/16 |
| Panel Net Weight | lbs. | 8.38 |

## Accessories

- Wireless Remote Controller — 45VM900001
- Programmable Wired Remote Controller — 45VM900002
- Touchscreen Programmable Wired Remote Controller — 45VM900003
- Touchscreen Central Controller — 45VM900006A
- Multi-Protocol Gateway — 45VM900052A
- Grille — 45VMI003----

# INDOOR UNIT 1 WAY CASSETTE 45VMI015---3
# DIMENSIONAL DRAWING

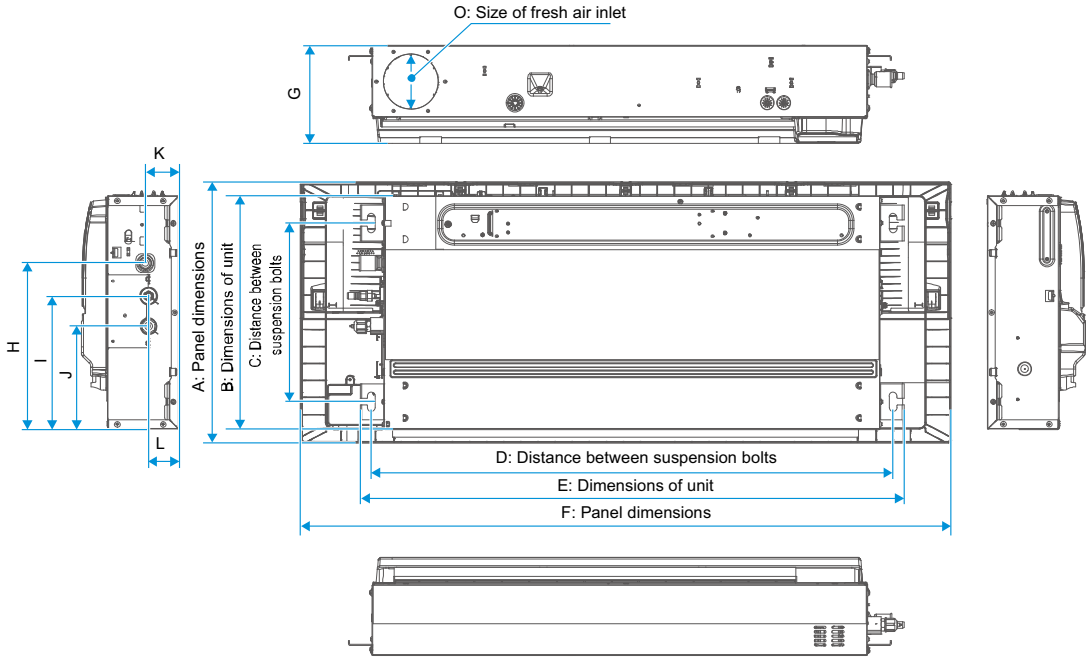


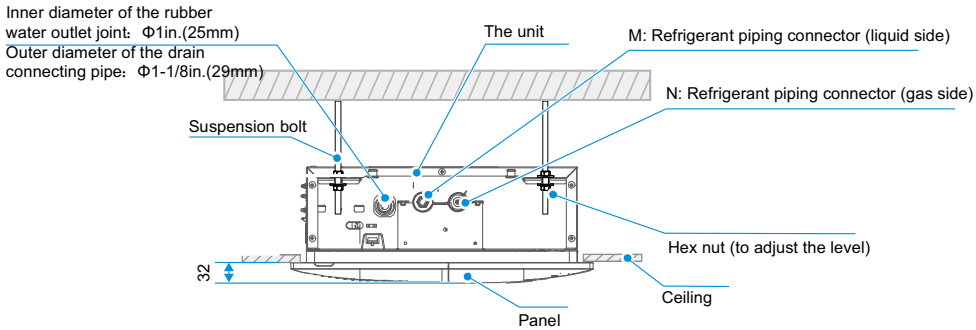


| Capacity | A | B | C | D | E | F | G | H |
|---|---|---|---|---|---|---|---|---|
| kBtu/h ≤ 7 | 18-11/16(475) | 16-3/4(425) | 12-13/16(325) | 29-3/8(746) | 30-15/16(786) | 38-9/16(980) | 7(178) | 11-15/16(303) |
| 7＜kBtu/h ≤ 12 | 18-11/16(475) | 16-3/4(425) | 12-13/16(325) | 37-1/4(946) | 38-13/16(986) | 46-7/16(1180) | 7(178) | 11-15/16(303) |
| 12＜kBtu/h ≤ 24 | 18-11/16(475) | 16-3/4(425) | 12-13/16(325) | 49-1/16(1246) | 50-5/8(1286) | 58-1/4(1480) | 7(178) | 11-15/16(303) |

| Capacity | I | J | K | L | M | N | O |
|---|---|---|---|---|---|---|---|
| kBtu/h ≤ 7 | 9-9/16(243) | 7-3/8(188) | 2-3/8(60) | 2-3/16(55) | Φ1/4(6.35) | Φ1/2(12.7) | 2-3/8(60) |
| 7＜kBtu/h ≤ 12 | 9-9/16(243) | 7-3/8(188) | 2-3/8(60) | 2-3/16(55) | Φ1/4(6.35) | Φ1/2(12.7) | 3-15/16(100) |
| 12＜kBtu/h ≤ 24 | 9-9/16(243) | 7-3/8(188) | 2-3/8(60) | 2-3/16(55) | Φ1/4(6.35) | Φ1/2(12.7) | 3-15/16(100) |

A261282

**Fig. 2 – Dimensional Drawing — Units: in. (mm.)**

©2026 Carrier. All rights reserved.
A Carrier Company

Edition Date: 09/26

**Catalog No: 45VMI015---3-B-1SD**
Replaces: New

**Manufacturer reserves the right to change, at any time, specifications and designs without notice and without obligations.**