48TC
Gas Heat/Electric Cooling Packaged Rooftop
15 to 27.5 Nominal Tons

Carrier
turn to the experts

Product Data

WeatherMaker®

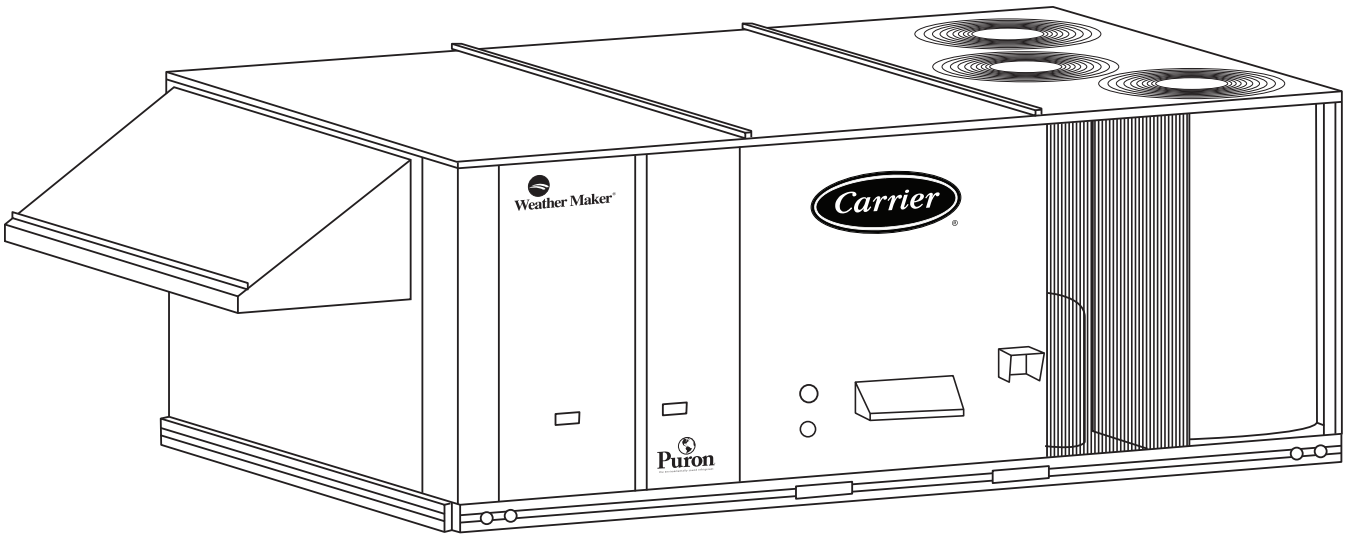

C09248

(Unit shown with optional economizer.)

AHRI CERTIFIED™ www.ahridirectory.org

Use of the AHRI Certified TM Mark indicates a manufacturer's participation in the program For verification of certification for individual products, go to www.ahridirectory.org.

Puron™ the environmentally sound refrigerant

ASHRAE 90.1 COMPLIANT

TABLE OF CONTENTS

	PAGE
FEATURES AND BENEFITS	3
MODEL NUMBER NOMENCLATURE	4
FACTORY OPTIONS AND/OR ACCESSORIES	6
AHRI COOLING RATING TABLES	8
HEAT RATING TABLE	8
SOUND PERFORMANCE TABLE	9
PHYSICAL DATA	10
DIMENSIONS	15
OPTIONS & ACCESSORIES WEIGHT ADDERS	24
APPLICATION/SELECTION DATA	25
COOLING CAPACITIES	27
STATIC PRESSURE ADDERS	36
DAMPER, BAROMETRIC RELIEF & PE PERF	37
FAN PERFORMANCE	39
ELECTRICAL INFORMATION	46
MCA / MOCP	48
TYPICAL WIRING DIAGRAMS	52
SEQUENCE OF OPERATION	54
GUIDE SPECIFICATIONS	57

Carrier
turn to the experts

The 15 to 27.5 Ton WeatherMaker® Carrier rooftop unit (RTU) was designed by customers for customers. With a newly designed cabinet that integrates “no-strip” screw collars, handled access panels, and more we’ve made your unit easy to install, easy to maintain, easy to use and reliable.

Easy to install:

These new WeatherMaker units are designed for dedicated factory-supplied vertical or horizontal air flow duct configurations. No special field kits are required. Designed to fit on pre-installed curbs by another manufacturer, these units also fit on past designed Carrier installed curbs with a new certified and authorized adapter curb. This new cabinet design also integrates a large control box that gives you room to work and room to mount Carrier accessory controls.

Easy to maintain:

Easy access handles by Carrier provide quick and easy access to all normally serviced components. Our “no-strip” screw system has superior holding power and guides screws into position while preventing the screw from stripping the unit’s metal. Take accurate pressure readings by reading system pressures with panels in place as compressors are strategically located to eliminate any air bypass.

Easy to use:

The newly designed, master terminal board by Carrier puts all your connections and troubleshooting points in one convenient place, standard. Most low voltage connections are made to the same board and make it easy to find what you’re looking for and easy to access it. Carrier rooftops have high and low pressure switches, a filter drier, and 2-in (51mm) filters standard.

Reliable:

Each unit comes with precision sized and tested scroll compressor that is internally protected from over temperature and pressures. In addition, each refrigerant circuit is further protected with a high pressure and low pressure switch as well as containing a liquid line filter drier. Each unit is factory tested prior to shipment to help ensure unit operation once properly installed.

Carrier Comfort System
PremierLink

FEATURES AND BENEFITS

- Two stage cooling capability with independent circuits and control.
- Round tube/plate fin (RTPF) available on all sizes or NOVATION all aluminum condenser (outdoor) coils available on 17-28 sizes only. Special coil-coating also available for coastal and industrial environments
- EER's up to 10.8.
- IEER's up to 11.6.
- Gas heating efficiencies up to 81% thermal efficiency.
- Dedicated vertical and horizontal air flow duct configuration models. No field kits required.
- Utility connections through the side or bottom. Bottom connections are also in an enclosed environment to help prevent water entry.
- Standardized components and layout. Standardized components and controls make service and stocking parts easier.
- Scroll compressors on all units. This makes service, stocking parts, replacement, and trouble-shooting easier.
- Proven Acutrol refrigerant metering system.
- Easy-adjust, belt-drive motor available. Carrier provides a factory solution for most points in the fan performance table. Motor assembly also contains a fan belt break protection system on all models and reliable pillow block bearing system that allows lubrication thru front of the unit.
- Single-point gas / electrical connection.
- Sloped, composite drain pan sheds water; and won't rust.
- Standardized controls and control box layout. Standardized components and controls make stocking parts and service easier.
- Clean, easy to use control box.
- Color-coded wiring.
- Large, laminated wiring and power wiring drawings which are affixed to unit make troubleshooting easy.
- Single, central terminal board for test and wiring connections.
- Fast-access, handled, panels for easy access on normally accessed service panels.
- "No-strip" screw system guides screws into the panel and captures them tightly without stripping the screw, the panel, or the unit.
- Mechanical cooling (115°F to 30°F / 46°C to -1°C) standard on all models. Low ambient controller allows operation down to -20°F / -29°C
- Redundant gas valve for two stage gas heating capacity control with induced-draft flue exhaust design to help ensure no flue gas can escape into the indoor air stream.
- Exclusive IGC solid state gas controller for on board diagnostics with LED error code designation, burner control logic and energy saving indoor fan motor delay.
- 2-in (51mm) disposable filters on all units, with 4-in (102mm) filter track field-installed.
- Refrigerant filter-drier on each circuit.
- High and low pressure switches. Added reliability with high pressure switch and low pressure switch.
- Many factory-installed options ranging from air management economizers, 2 position dampers, manual outdoor air dampers, plus convenience outlets, disconnect switch and smoke detectors.
- Factory-installed Humidi-MiZer® adaptive dehumidification system. Available on 17-28 sizes with RTPF condenser coil models only.
- Standard Parts Warranty: 10 year aluminized heat exchanger, 5 year compressor, 3 year NOVATION condenser coil, 1 year others.

MODEL NUMBER NOMENCLATURE

1	2	3	4	5	6	7	8	9	10	11	12	13	14	15	16	17	18
4	8	T	C	D	D	2	4	A	1	G	6	–	0	A	0	A	0

Unit Heat Type
48 = Gas Heat Pkg. Rooftop

Model Series – Weathermaker
TC = Standard Efficiency

Heat Size
D = Low Gas Heat
E = Medium Gas Heat
F = High Gas Heat
S = Low Stainless Gas Heat
R = Medium Stainless Gas Heat
T = High Stainless Gas Heat

Refrig. System Options
D = 2–stage Cooling
E = 2–stg Cool w/Humidi–MiZer (RTPF 17–28)

Cooling Tons
17 = 15 Ton
20 = 17.5 Ton
24 = 20 Ton
28 = 25 Ton
30 = 27.5 Ton

Sensor Options
A = None
B = RA Smoke Detector
C = SA Smoke Detector
D = RA + SA Smoke Detector
E = CO_2
F = RA Smoke Detector and CO_2
G = SA Smoke Detector and CO_2
H = RA & SA Smoke Detector and CO_2

Indoor Fan Options
1 = Standard Static Option, Vertical
2 = Medium Static Option, Vertical
3 = High Static Option, Vertical
B = Medium Static High Eff Motor/Vertical Supply, Return Air Flow
C = High Static, High Eff Motor/Vertical Supply, Return Air Flow

5 = Standard Static Option, Horizontal
6 = Medium Static Option, Horizontal
7 = High Static Option, Horizontal
F = Medium Static High Eff Motor/Horizontal Supply, Return Air Flow
G = High Static High Eff Motor/Horizontal Supply, Return Air Flow

Coil Options (Outdoor–Indoor–Hail Guard)–Novation
G = Al/Al – Al/Cu
H = Al/Al – Cu/Cu
J = Al/Al – E–coat Al/Cu
K = Al/Al E–coat – Al/Cu
L = Al/Al E–coat – Al/Cu E–coat
T = Al/Al – Al/Cu, Louvered
U = Al/Al – Cu/Cu,– Louvered
V = Al/Al – E–coat Al/Cu, Louvered
W = Al/Al E–coat – Al/Cu, Louvered
X = Al/Al E–coat – Al/Cu E–coat, Louvered

Coil Options (Outdoor–Indoor–Hail Guard)–Round Tube Plate Fin (RTPF) Coils Only
A = Al/Cu – Al/Cu
B = Pre–coat Al/Cu – Al/Cu
C = E–coat Al/Cu – Al/Cu
D = E–coat Al/Cu – E–coat Al/Cu
E = Cu/Cu – Al/Cu
F = Cu/Cu – Cu/Cu
M = Al/Cu – Al/Cu – Louvered Hail Guard
N = Pre–coat Al/Cu – Al/Cu – Louvered Hail Guard
P = E–coat Al/Cu – Al/Cu – Louvered Hail Guard
Q = E–coat Al/Cu – E–coat Al/Cu – Louvered Hail Guard
R = Cu/Cu – Al/Cu – Louvered Hail Guard
S = Cu/Cu – Cu/Cu – Louvered Hail Guard

Voltage
1 = 575/3/60
5 = 208–230/3/60
6 = 460/3/60

Design Rev
– = Factory assigned

Base Unit Controls
0 = Electromechanical
1 = PremierLink™ Controller
2 = RTU Open Protocol Controller

Intake / Exhaust Options
A = None
B = Temp Economizer w/ Barometric Relief
D = Temperature Economizer w/PE
F = Enthalpy Economizer w/ Baro Relief
H = Enthalpy Economizer w/PE
K = 2–Position Damper
P = Manual Outdoor Air Damper

Service Options
0 = None
1 = Unpowered Convenience Outlet
2 = Powered Convenience Outlet

Electrical Options
A = None
C = Non–Fused Disconnect
D = Thru The Base Connections
F = Non–Fused Disc/Thru The Base

Packaging Options
0 = Standard
3 = Cal. Seismic Compliant (17–28 sizes)

Table 1 – FACTORY-INSTALLED OPTIONS AND FIELD-INSTALLED ACCESSORIES

CATEGORY	ITEM	FACTORY INSTALLED OPTION	FIELD INSTALLED ACCESSORY
Cabinet	Dedicated Vertical Air Flow Duct Configuration	X	
	Dedicated Horizontal Air Flow Duct Configuration	X	
	Thru–the–base electrical or gas–line connections	X	
	California Seismic Compliant Labeling (17–28 sizes only)	X	
Coil Options	Cu/Cu (indoor) coils	X	
	Pre–Coat (outdoor) coils	X	
	E–coated (outdoor & indoor) coils	X	
Humidity Control	Humidi–MiZer Adapt. Dehumidification System (17–28 RTPF)	X	
Condenser Protection	Condenser coil hail guard (louvered design)	X	X
Controls	Thermostats, temperature sensors, and subbases		X
	PremierLink DDC communicating controller	X	X
	RTU Open protocol controller	X	
	Smoke detector (supply and/or return air)	X	X
	Time Guard II compressor delay control circuit		X
	Phase Monitor		X
Economizers & Outdoor Air Dampers	EconoMi$er™ IV (for electro–mechanical controlled RTUs)	X	X
	EconoMi$er™2 (for DDC controlled RTUs)	X	X
	Motorized 2 position outdoor–air damper	X	X
	Manual outdoor–air damper (25%)	X	X
	Barometric relief[1]	X	X
	Barometric hood (Horizontal economizer)		X
	Power exhaust–centrifugal blower	X	X
Economizer Sensors & IAQ Devices	Single dry bulb temperature sensors[2]	X	X
	Differential dry bulb temperature sensors[2]		X
	Single enthalpy sensors[2]	X	X
	Differential enthalpy sensors[2]		X
	Wall or duct mounted CO_2 sensor[2]		X
	Unit mounted CO_2 sensor[2]	X	
	4–in Filter Track Assembly		X
Gas Heat	Propane conversion kit		X
	Stainless steel heat exchanger	X	
	High altitude conversion kit		X
	Flue Discharge Deflector		X
Indoor Motor & Drive	Multiple motor and drive packages	X	
Low Ambient Control	Winter start kit[3]		X
	Motormaster head pressure controller[3]		X
Power Options	Convenience outlet (powered)	X	
	Convenience outlet (unpowered)	X	
	Non–fused disconnect[4]	X	
Roof Curbs	Roof curb 14–in (356mm)		X
	Roof curb 24–in (610mm)		X
	Adapter Curb (Adapts to Models – DP/DR/HJ/TM/TJ)[5] (17–28)		X

NOTES:
1. Included with economizer.
2. Sensors used to optimize economizer performance.
3. See application data for assistance.
4. Non–fused disconnect switch cannot be used when MOCP electrical rating exceeds 70 amps at 460/575 volt and 150 amps at 208/230 volt. Carrier Packaged RTUBuilder selects this automatically.
5. Not for 48TJE024–028 models using 48DP900041, 48DP900051 or 48DP900061 roofcurbs.

FACTORY OPTIONS AND/OR ACCESSORIES

Economizer (dry-bulb or enthalpy)

Economizers save money. They bring in fresh, outside air for ventilation; and provide cool, outside air to cool your building. This is the preferred method of low-ambient cooling. When coupled to CO_2 sensors, economizers can provide even more savings by coupling the ventilation air to only that amount required.

Economizers are available, installed and tested by the factory, with either enthalpy or dry-bulb temperature inputs. There are also models for electromechanical as well as direct digital controllers. Additional sensors are available as accessories to optimize the economizers.

Economizers include gravity controlled, barometric relief equalizes building pressure and ambient air pressures. This can be a cast effective solution to prevent building pressurization. If further control of exhaust air is required, a dual centrifugal fan power exhaust system is also available.

CO_2 Sensor

Improves productivity and saves money by working with the economizer to intake only the correct amount of outside air for ventilation. As occupants fill your building, the CO_2 sensor detects their presence through increasing CO_2 levels, and opens the economizer appropriately.

When the occupants leave, the CO_2 levels decrease, and the sensor appropriately closes the economizer. This intelligent control of the ventilation air, called Demand Control Ventilation (DCV) reduces the overall load on the rooftop, saving money.

Smoke Detectors

Trust the experts. Smoke detectors make your application safer and your job easier. Carrier smoke detectors immediately shut down the rooftop unit when smoke is detected. They are available, installed by the factory, for supply air, return air, or both.

Louvered Hail Guards

Sleek, louvered panels protect the condenser coil from hail damage, foreign objects, and incidental contact.

Convenience Outlet (powered or un-powered)

Reduce service and/or installation costs by including a convenience outlet in your specification. Carrier will install this service feature at our factory. Provides a convenient, 15 amp, 115v GFCI receptacle with “Wet in Use” cover. The “powered” option allows the installer to power the outlet from the line side of the disconnect side as required by code. The “unpowered” option is to be powered from a separate 115/120v power source.

Non-Fused Disconnect

This OSHA-compliant, factory-installed, safety switch allows a service technician to locally secure power to the rooftop.

Power Exhaust with Barometric Relief

Superior internal building pressure control. This field-installed accessory or factory-installed option may eliminate the need for costly, external pressure control fans.

PremierLink™, DDC Controller

This CCN controller regulates your rooftop’s performance to tighter tolerances and expanded limits, as well as facilitates zoning systems and digital accessories. It also unites your Carrier HVAC equipment together on one, coherent CCN network. The PremierLink can be factory-installed, or easily field-installed.

RTU Open Protocol Controller

Connect the rooftop to an existing BAS without needing complicated translators or adapter modules using the RTU-Open controller. This new controller speaks the 4 most common building automation system languages (Bacnet, Modbus, N2, and Lonworks). Use this controller when you have an existing BAS.

Time Guard II Control Circuit

This accessory protects your compressor by preventing short-cycling in the event of some other failure, prevents the compressor from restarting for 30 seconds after stopping. Not required with PremierLink, RTU-Open, or authorized commercial thermostats.

Motorized 2-Position Damper

The new Carrier 2-position, motorized outdoor air damper admits up to 100% outside air. Using reliable, gear-driven technology, the 2-position damper opens to allow ventilation air and closes when the rooftop stops, stopping unwanted infiltration.

Manual OA Damper

Manual outdoor air dampers are an economical way to bring in ventilation air. The dampers are available in 25% versions.

Optional Humidi-MiZer Adaptive Dehumidification System

Carrier’s Humidi-MiZer adaptive dehumidification system is an all-inclusive factory installed option that can be ordered with any WeatherMaker 48TC17-28 rooftop unit.

This system expands the envelope of operation of Carrier’s WeatherMaker rooftop products to provide unprecedented flexibility to meet year round comfort conditions.

The Humidi-MiZer adaptive dehumidification system has the industry’s only dual dehumidification mode setting. The Humidi-MiZer system includes two new modes of operation.

The WeatherMaker® 48TC17-28 rooftop coupled with the Humidi-MiZer system is capable of operating in normal design cooling mode, subcooling mode, and hot gas reheat mode. Normal design cooling mode is when the unit will operate under its normal sequence of operation by cycling compressors to maintain comfort conditions.

Subcooling mode will operate to satisfy part load type conditions when the space requires combined sensible and a higher proportion of latent load control. Hot Gas Reheat mode will operate when outdoor temperatures diminish and the need for latent capacity is required for sole humidity control. Hot Gas Reheat mode will provide neutral air for maximum dehumidification operation.

Motormaster Head Pressure Controller

The Motormaster motor controller is a low ambient, head pressure controller kit that is designed to maintain the unit's condenser head pressure during periods of low ambient cooling operation. This device should be used as an alternative to economizer free cooling not when economizer usage is either not appropriate or desired. The Motormaster will either cycle the outdoor-fan motors or operate them at reduced speed to maintain the unit operation, depending on the model.

Winter Start Kit

The winter start kit by Carrier extends the low ambient limit of your rooftop to 25°F (-4°C). The kit bypasses the low pressure switch, preventing nuisance tripping of the low pressure switch. Other low ambient precautions may still be prudent.

Propane Heating

Convert your gas heat rooftop from standard natural gas operation to Propane using this field-installed kit.

High Altitude Heating

High altitudes have less oxygen, which means heat exchangers need less fuel. The new gas orifices in this field-installed kit make the necessary adjustment for high altitude applications. They restore the optimal fuel to air mixture and maintain healthy combustion at altitudes above 2000 ft (610m). Kits may not be required in all areas.

Optional Stainless Steel Heat Exchanger

The stainless steel heat exchanger option provides the tubular heat exchanger be made out of a minimum 20 gauge type 409 stainless steel for applications where the mixed air to the heat exchanger is expected to drop below 45°F (7°C). Stainless steel may be specified on applications where the presence of airborne contaminants require its use (applications such as paper mills) or in area with very high outdoor humidity that may result in severe condensation in the heat exchanger during cooling operation.

Flue Discharge Deflector

The flue discharge deflector is a useful accessory when flue gas recirculation is a concern. By venting the flue discharge upwards, the deflector minimizes the chance for a neighboring unit to intake the flue exhaust.

Alternate Motors and Drives

Some applications need larger horsepower motors, some need more airflow, and some need both. Regardless of the case, your Carrier expert has a factory installed combination to meet your application. A wide selection of motors and pulleys (drives) are available, factory installed, to handle nearly any application.

Thru-the-Base Connections

Thru-the-base connections, available as a factory option, are necessary to ensure proper connection and seal when routing wire and piping through the rooftop's basepan and curb. These couplings eliminate roof penetration and should be considered for gas lines, main power lines, as well as control power.

Barometric Hood

For Horizontal Economizer applications where relief damper is installed in duct work. This kit provides the needed protection.

California OSHPD Seismic Certification Label (17-28 sizes)

Units meet the seismic capacity requirements of the International Code Council Evaluation Service (ICC-ES) document AC156 (Acceptance Criteria for Seismic Qualification by Shake-Table Testing of Nonstructural Components and Systems) and per International Building Code (IBC 2009) at an SDS (g) value of 2.00 z/h=1.0, Ip=1.5 and certified by independent structural engineers. A certification label is applied to the unit that meets the CA OSHPD Special Seismic Certification pre-approval labeling requirements on the external chassis of the unit.

Table 2 – AHRI COOLING RATING TABLE **2-STAGE COOLING**

UNIT	COOLING STAGES	NOM. CAPACITY (TONS)	NET COOLING CAPACITY (MBH)	TOTAL POWER (kW)	EER	IEER
17	2	15	192.0	17.8	10.8	11.6
20	2	17.5	207.0	19.2	10.8	11.6
24	2	20	242.0	24.7	9.8	10.6
28	2	25	280.0	28.6	9.8	10.4
30	2	30	330.0	32.4	10.2	10.4

LEGEND

AHRI – Air Conditioning, Heating and Refrigeration Institute Test Standard
ASHRAE – American Society of Heating, Refrigerating and Air Conditioning, Inc.
EER – Energy Efficiency Ratio
IEER – Integrated Energy Efficiency Ratio

NOTES:

1. Rated and certified under AHRI Standard 340/360, as appropriate.
2. Ratings are based on:
   Cooling Standard: 80°F (27°C) db, 67°F (19°C) wb indoor air temp and 95°F (35°C) db outdoor air temp.
   IEER Standard: A measure that expresses cooling part–load EER efficiency for commercial unitary air conditioning and heat pump equipment on the basis of weighted operation at various load capacities.
3. All 48TC units comply with ASHRAE 90.1 Energy Standard for minimum EER and IEER requirements.
4. 48TC units comply with US Energy Policy Act (2005). To evaluate code compliance requirements, refer to state and local codes or visit the following website: http://bcap–energy.org to determine if compliance with this standard pertains to your state, territory, or municipality.

Table 3 – HEATING RATING TABLE - NATURAL GAS & PROPANE

MODEL SIZE	HEAT SIZE	AL/SS HEAT EXCHANGER		TEMP RISE (DEG F)	THERMAL EFFICIENCY (%)
		INPUT / OUTPUT STAGE 1 (MBH)	INPUT / OUTPUT STAGE 2 (MBH)		
17	LOW	176 / 142	220 / 178	20 – 55	81%
	MED	248 / 200	310 / 251	30 – 60	81%
	HIGH	320 / 260	400 / 324	35 – 65	81%
20	LOW	176 / 142	220 / 178	15 – 55	81%
	MED	248 / 200	310 / 251	25 – 60	81%
	HIGH	320 / 260	400 / 324	30– 65	81%
24	LOW	176 / 142	220 / 178	15 – 55	81%
	MED	248 / 200	310 / 251	20 – 60	81%
	HIGH	320 / 260	400 / 324	30– 65	81%
28	LOW	176 / 142	220 / 178	10 – 55	81%
	MED	248 / 200	310 / 251	15 – 60	81%
	HIGH	320 / 260	400 / 324	20 – 65	81%
30	LOW	176 / 142	220 / 178	10 – 55	81%
	MED	248 / 200	310 / 251	15 – 60	81%
	HIGH	320 / 260	400 / 324	20 – 65	81%

NOTES:

Heat ratings are for natural gas heat exchangers operated at or below 2000 ft (610 m). For information on Propane or altitudes above 2000 ft (610 m), see the Application Data section of this book. Accessory Propane/High Altitude kits are also available.

In the USA the input rating for altitudes above 2000 ft (610m) must be derated by 4% for each 1000 ft (305 m) above sea level. In Canada, the input rating must be derated by 10% for altitudes of 2000 ft (610 m) to 4500 ft (1372 m) above sea level.

Table 4 – SOUND PERFORMANCE TABLE

MODEL SIZE	COOLING STAGES	Outdoor Sound (dB)									
		A–Wtg.	AHRI 370 Rating	63	125	250	500	1000	2000	4000	8000
17	2	84.1	84	92.2	83.9	80.4	81.8	78.7	76.5	72.2	65.4
20	2	84.1	84	92.2	83.9	80.4	81.8	78.7	76.5	72.2	65.4
24	2	86.5	87	95.6	87.5	84.2	84.2	81.7	77.9	73.2	66.3
28	2	85.9	86	97.1	88.3	84.4	83.3	80.7	77.4	73.4	67.3
30	2	85.9	86	97.1	88.3	84.4	83.3	80.7	77.4	73.4	67.3

LEGEND

dB – Decibel

NOTES:

1. Outdoor sound data is measure in accordance with AHRI standard 270–2008.
2. Measurements are expressed in terms of sound power. Do not compare these values to sound pressure values because sound pressure depends on specific environmental factors which normally do not match individual applications. Sound power values are independent of the environment and therefore more accurate.
3. A–weighted sound ratings filter out very high and very low frequencies, to better approximate the response of "average" human ear. A–weighted measurements for Carrier units are taken in accordance with AHRI standard 270–2008.

48TC

Table 5 – MINIMUM - MAXIMUM AIRFLOW RATINGS - NATURAL GAS & PROPANE

UNIT	HEAT LEVEL	COOLING		AL HX HEATING		SS HX HEATING	
		Minimum	Maximum	Minimum	Maximum	Minimum	Maximum
17	LOW	4500	7500	3000	8250	3000	8250
	MED			3880	7750	3880	7750
	HIGH			4620	8570	4620	8570
20	LOW	5250	9000	3000	11000	3000	11000
	MED			3880	9300	3880	9300
	HIGH			4620	10000	4620	10000
24	LOW	6000	10000	3000	11000	3000	11000
	MED			3880	11630	3880	11630
	HIGH			4620	10000	4620	10000
28	LOW	7500	12500	3000	16500	3000	16500
	MED			3880	15500	3880	15500
	HIGH			4620	15000	4620	15000
30	LOW	8250	13750	3000	16500	3000	16500
	MED			3880	15500	3880	15500
	HIGH			4620	15000	4620	15000

AL = Aluminum Gas Heat Exchanger

SS = Stainless Steel Gas Heat Exchanger

Table 6 – PHYSICAL DATA (COOLING) 15 - 27.5 TONS Novation - All Aluminum Coil Design

	48TC*17	48TC*20	48TC*24	48TC*28
Refrigeration System				
# Circuits / # Comp. / Type	2 / 2 / Scroll	2 / 2 / Scroll	2 / 2 / Scroll	2 / 2 / Scroll
R–410a charge A/B (lbs)	9.5/12.0	9.5/12.0	14.4/12.5	12.5/13.0
Metering device	Acutrol	Acutrol	Acutrol	Acutrol
High–press. Trip / Reset (psig)	630 / 505	630 / 505	630 / 505	630 / 505
Low–press. Trip / Reset (psig)	54 / 117	54 / 117	54 / 117	54 / 117
Compressor Capacity Staging (%)	50 / 100	50 / 100	50 / 100	50 / 100
Evap. Coil				
Material	Cu / Al	Cu / Al	Cu / Al	Cu / Al
Tube Diameter	3/8–in	3/8–in	3/8–in	3/8–in
Rows / FPI	4 / 15	4 / 15	4 / 15	4 / 15
Total face area (ft2)	19.56	19.56	22.00	23.11
Condensate drain conn. size	3/4–in	3/4–in	3/4–in	3/4–in
Evap. fan and motor VERTICAL				
Standard Static				
Motor Qty / Drive type	1 / Belt	1 / Belt	1 / Belt	1 / Belt
Max BHP	2.2	3.3	4.9	4.9
RPM range	514–680	622–822	690–863	717–911
Motor frame size	56	56	56	56
Fan Qty / Type	2 / Centrifugal	2 / Centrifugal	2 / Centrifugal	2 / Centrifugal
Fan Diameter (in)	15 x 15	15 x 15	15 x 15	15 x 15
Medium Static				
Motor Qty / Drive type	1 / Belt	1 / Belt	1 / Belt	1 / Belt
Max BHP	3.3	4.9	6.5	6.5
RPM range	679–863	713–879	835–1021	913–1116
Motor frame size	56	56	184T	184T
Fan Qty / Type	2 / Centrifugal	2 / Centrifugal	2 / Centrifugal	2 / Centrifugal
Fan Diameter (in)	15 x 15	15 x 15	15 x 15	15 x 15
High Static				
Motor Qty / Drive type	1 / Belt	1 / Belt	1 / Belt	1 / Belt
Max BHP	4.9	6.5	8.7	8.7
RPM range	826–1009	882–1078	941–1176	941–1176
Motor frame size	56	184T	213T	213T
Fan Qty / Type	2 / Centrifugal	2 / Centrifugal	2 / Centrifugal	2 / Centrifugal
Fan Diameter (in)	15 x 15	15 x 15	15 x 15	15 x 15
Medium Static High Eff*				
Motor Qty / Drive type	n/a	n/a	1 / Belt	1 / Belt
Max BHP	n/a	n/a	6.5	6.5
RPM range	n/a	n/a	835–1021	913–1116
Motor frame size	n/a	n/a	184T	184T
Fan Qty / Type	n/a	n/a	2 / Centrifugal	2 / Centrifugal
Fan Diameter (in)	n/a	n/a	15 x 15	15 x 15
High Static High Eff*				
Motor Qty / Drive type	n/a	1 / Belt	1 / Belt	1 / Belt
Max BHP	n/a	6.5	8.7	8.7
RPM range	n/a	882–1078	941–1176	941–1176
Motor frame size	n/a	184T	213T	213T
Fan Qty / Type	n/a	2 / Centrifugal	2 / Centrifugal	2 / Centrifugal
Fan Diameter (in)	n/a	15 x 15	15 x 15	15 x 15

* Section 313 of the Energy Independence and Security Act of 2007 (EISA 2007) mandates that the efficiency of general purpose motors we use in our Light Commercial Rooftops rated at 5.0 HP and larger be increased on or after December 19, 2010. We will offer both high and standard efficient motors until inventory is depleted and then shift over solely to the high efficient motors only.

Table 7 (cont.) – PHYSICAL DATA (COOLING) 15 - 27.5 TONS Novation - All Aluminum Coil Design

		48TC*17	48TC*20	48TC*24	48TC*28
Evap. fan and motor (cont.)					
HORIZONTAL					
Standard Static	Motor Qty / Drive type	1 / Belt	1 / Belt	1 / Belt	1 / Belt
	Max BHP	2.2	3.3	4.9	4.9
	RPM range	514 – 680	622 – 822	690 – 863	647 – 791
	Motor frame size	56	56	56	56
	Fan Qty / Type	2 / Centrifugal	2 / Centrifugal	2 / Centrifugal	2 / Centrifugal
	Fan Diameter (in)	18 x 15 & 15 X 11	18 x 15 & 15 X 11	18 x 15 & 15 X 11	18 x 15 & 15 X 11
Medium Static	Motor Qty / Drive type	1 / Belt	1 / Belt	1 / Belt	1 / Belt
	Max BHP	3.3	4.9	6.5	6.5
	RPM range	614 – 780	713 – 879	835 – 1021	755 – 923
	Motor frame size	56	56	184T	184T
	Fan Qty / Type	2 / Centrifugal	2 / Centrifugal	2 / Centrifugal	2 / Centrifugal
	Fan Diameter (in)	18 x 15 & 15 X 11	18 x 15 & 15 X 11	18 x 15 & 15 X 11	18 x 15 & 15 X 11
High Static	Motor Qty / Drive type	1 / Belt	1 / Belt	1 / Belt	1 / Belt
	Max BHP	4.9	6.5	8.7	8.7
	RPM range	746 – 912	882 – 1078	941 – 1176	827 – 1010
	Motor frame size	56	184T	213T	213T
	Fan Qty / Type	2 / Centrifugal	2 / Centrifugal	2 / Centrifugal	2 / Centrifugal
	Fan Diameter (in)	18 x 15 & 15 X 11	18 x 15 & 15 X 11	18 x 15 & 15 X 11	18 x 15 & 15 X 11
Medium Static High Eff*	Motor Qty / Drive type	n/a	n/a	1 / Belt	1 / Belt
	Max BHP	n/a	n/a	6.5	6.5
	RPM range	n/a	n/a	835 – 1021	755 – 923
	Motor frame size	n/a	n/a	184T	184T
	Fan Qty / Type	n/a	n/a	2 / Centrifugal	2 / Centrifugal
	Fan Diameter (in)	n/a	n/a	18 x 15/15 x 11	18 x 15/15 x 11
High Static High Eff*	Motor Qty / Drive type	n/a	1 / Belt	1 / Belt	1 / Belt
	Max BHP	n/a	6.5	8.7	8.7
	RPM range	n/a	882 – 1078	941 – 1176	827 – 1010
	Motor frame size	n/a	184T	213T	213T
	Fan Qty / Type	n/a	2 / Centrifugal	2 / Centrifugal	2 / Centrifugal
	Fan Diameter (in)	n/a	18 x 15/15 x 11	18 x 15/15 x 11	18 x 15/15 x 11
Cond. Coil (Circuit A)					
	Coil type	Novation	Novation	Novation	Novation
	Coil Length (in)	70	70	82	75
	Coil Height (in)	44	44	44	52
	Total face area (ft2)	21.4	21.4	25.1	27.1
Cond. Coil (Circuit B)					
	Coil type	Novation	Novation	Novation	Novation
	Coil Length (in)	70	70	57	75
	Coil Height (in)	44	44	44	52
	Total face area (ft2)	21.4	21.4	17.4	27.1
Cond. fan / motor					
	Qty / Motor drive type	3 / direct	3 / direct	4 / direct	4 / direct
	Motor HP / RPM	1/4 / 1100	1/4 / 1100	1/4 / 1100	1/4 / 1100
	Fan diameter (in)	22	22	22	22
Filters					
	RA Filter # / size (in)	6 / 20 x 25 x 2	6 / 20 x 25 x 2	6 / 20 x 25 x 2	9 / 16 x 25 x 2
	OA inlet screen # / size (in)	4 / 16 x 25 x 1	4 / 16 x 25 x 1	4 / 16 x 25 x 1	4 / 16 x 25 x 1

* Section 313 of the Energy Independence and Security Act of 2007 (EISA 2007) mandates that the efficiency of general purpose motors we use in our Light Commercial Rooftops rated at 5.0 HP and larger be increased on or after December 19, 2010. We will offer both high and standard efficient motors until inventory is depleted and then shift over solely to the high efficient motors only.

Table 7 – PHYSICAL DATA (COOLING) 15 - 27.5 TONS RTPF - Round Tube/Plate Fin Coil Design

	48TC*17	48TC*20	48TC*24	48TC*28	48TC*D30
Refrigeration System					
# Circuits / # Comp. / Type	2 / 2 / Scroll	2 / 2 / Scroll	2 / 2 / Scroll	2 / 2 / Scroll	2 / 2 / Scroll
R–410a charge A/B (lbs)	16.3/17.5	9.5/12.0	20.6/14.7	19.8/20.4	27.0/ 28.5
Humidi–MiZer R–410a charge A/B (lbs)	25.9/25.7	25.9/25.7	27.9/20.5	27.9/28.9	n/a
Metering device	Acutrol	Acutrol	Acutrol	Acutrol	Acutrol
High–press. Trip / Reset (psig)	630 / 505	630 / 505	630 / 505	630 / 505	630 / 505
Low–press. Trip / Reset (psig)	54 / 117	54 / 117	54 / 117	54 / 117	54 / 117
Humidi–MiZer Low–press. Trip / Reset (psig)	27 / 44	27 / 44	27 / 44	27 / 44	n/a
Compressor Capacity Staging (%)	50 / 100	50 / 100	50 / 100	50 / 100	50 / 100
Evap. Coil					
Material	Cu / Al	Cu / Al	Cu / Al	Cu / Al	Cu / Al
Tube Diameter	3/8–in	3/8–in	3/8–in	3/8–in	3/8–in
Rows / FPI	4 / 15	4 / 15	4 / 15	4 / 15	4 / 15
Total face area (ft2)	22.00	22.00	22.00	23.11	26
Condensate drain conn. size	3/4–in	3/4–in	3/4–in	3/4–in	3/4–in
Humidi–MiZer Coil					
Material	Cu / Al	Cu / Al	Cu / Al	Cu / Al	n/a
Tube Diameter	3/8–in	3/8–in	3/8–in	3/8–in	n/a
Rows / FPI	1 / 17	1 / 17	1 / 17	1 / 17	n/a
Total face area (ft2)	22.00	22.00	22.00	23.11	n/a
Evap. fan and motor VERTICAL					
Standard Static — Motor Qty / Drive type	1 / Belt	1 / Belt	1 / Belt	1 / Belt	n/a
Max BHP	2.2	3.3	4.9	4.9	n/a
RPM range	514–680	622–822	690–863	717–911	n/a
Motor frame size	56	56	56	56	n/a
Fan Qty / Type	2 / Centrifugal	2 / Centrifugal	2 / Centrifugal	2 / Centrifugal	n/a
Fan Diameter (in)	15 x 15	15 x 15	15 x 15	15 x 15	n/a
Medium Static — Motor Qty / Drive type	1 / Belt	1 / Belt	1 / Belt	1 / Belt	n/a
Max BHP	3.3	4.9	6.5	6.5	n/a
RPM range	679–863	713–879	835–1021	913–1116	n/a
Motor frame size	56	56	184T	184T	n/a
Fan Qty / Type	2 / Centrifugal	2 / Centrifugal	2 / Centrifugal	2 / Centrifugal	n/a
Fan Diameter (in)	15 x 15	15 x 15	15 x 15	15 x 15	n/a
High Static — Motor Qty / Drive type	1 / Belt	1 / Belt	1 / Belt	1 / Belt	n/a
Max BHP	4.9	6.5	8.7	8.7	n/a
RPM range	826–1009	882–1078	941–1176	941–1176	n/a
Motor frame size	56	56	213T	213T	n/a
Fan Qty / Type	2 / Centrifugal	2 / Centrifugal	2 / Centrifugal	2 / Centrifugal	n/a
Fan Diameter (in)	15 x 15	15 x 15	15 x 15	15 x 15	n/a
Standard Static High Eff* — Motor Qty / Drive type	n/a	n/a	n/a	n/a	1 / Belt
Max BHP	n/a	n/a	n/a	n/a	6.5
RPM range	n/a	n/a	n/a	n/a	751–954
Motor frame size	n/a	n/a	n/a	n/a	56
Fan Qty / Type	n/a	n/a	n/a	n/a	2 / Centrifugal
Fan Diameter (in)	n/a	n/a	n/a	n/a	15 x 15
Medium Static High Eff* — Motor Qty / Drive type	n/a	n/a	1 / Belt	1 / Belt	1 / Belt
Max BHP	n/a	n/a	6.5	6.5	10.5
RPM range	n/a	n/a	835–1021	913–1116	920–1190
Motor frame size	n/a	n/a	184T	184T	184T
Fan Qty / Type	n/a	n/a	2 / Centrifugal	2 / Centrifugal	2 / Centrifugal
Fan Diameter (in)	n/a	n/a	15 x 15	15 x 15	15 x 15
High Static High Eff* — Motor Qty / Drive type	n/a	1 / Belt	1 / Belt	1 / Belt	2 / Belt
Max BHP	n/a	6.5	8.7	8.7	11.9
RPM range	n/a	882–1078	941–1176	941–1176	1116–1400
Motor frame size	n/a	184T	213T	213T	213T
Fan Qty / Type	n/a	2 / Centrifugal	2 / Centrifugal	2 / Centrifugal	2 / Centrifugal
Fan Diameter (in)	n/a	15 x 15	15 x 15	15 x 15	15 x 15

* Section 313 of the Energy Independence and Security Act of 2007 (EISA 2007) mandates that the efficiency of general purpose motors we use in our Light Commercial Rooftops rated at 5.0 HP and larger be increased on or after December 19, 2010. We will offer both high and standard efficient motors until inventory is depleted and then shift over solely to the high efficient motors only.

Table 8 (cont.) – PHYSICAL DATA (COOLING) 15 - 27.5 TONS RTPF (Round Tube/Plate Fin Coil Design)

		48TC*17	48TC*20	48TC*24	48TC*28	48TC*30
Evap. fan and motor HORIZONTAL						
Standard Static	Motor Qty / Drive type	1 / Belt	1 / Belt	1 / Belt	1 / Belt	n/a
	Max BHP	2.2	3.3	4.9	4.9	n/a
	RPM range	514 – 680	622 – 822	690 – 863	647 – 791	n/a
	Motor frame size	56	56	56	56	n/a
	Fan Qty / Type	2 / Centrifugal	2 / Centrifugal	2 / Centrifugal	2 / Centrifugal	n/a
	Fan Diameter (in)	18 x 15 & 15 X 11	18 x 15 & 15 X 11	18 x 15 & 15 X 11	18 x 15 & 15 X 11	n/a
Medium Static	Motor Qty / Drive type	1 / Belt	1 / Belt	1 / Belt	1 / Belt	n/a
	Max BHP	3.3	4.9	6.5	6.5	n/a
	RPM range	614 – 780	713 – 879	835 – 1021	755 – 923	n/a
	Motor frame size	56	56	184T	184T	n/a
	Fan Qty / Type	2 / Centrifugal	2 / Centrifugal	2 / Centrifugal	2 / Centrifugal	n/a
	Fan Diameter (in)	18 x 15 & 15 X 11	18 x 15 & 15 X 11	18 x 15 & 15 X 11	18 x 15 & 15 X 11	n/a
High Static	Motor Qty / Drive type	1 / Belt	1 / Belt	1 / Belt	1 / Belt	n/a
	Max BHP	4.9	6.5	8.7	8.7	n/a
	RPM range	746 – 912	882 – 1078	941 – 1176	827 – 1010	n/a
	Motor frame size	56	184T	213T	213T	n/a
	Fan Qty / Type	2 / Centrifugal	2 / Centrifugal	2 / Centrifugal	2 / Centrifugal	n/a
	Fan Diameter (in)	18 x 15 & 15 X 11	18 x 15 & 15 X 11	18 x 15 & 15 X 11	18 x 15 & 15 X 11	n/a
Standard Static High Eff*	Motor Qty / Drive type	n/a	n/a	n/a	n/a	1 / Belt
	Max BHP	n/a	n/a	n/a	n/a	6.5
	RPM range	n/a	n/a	n/a	n/a	687 – 873
	Motor frame size	n/a	n/a	n/a	n/a	184T
	Fan Qty / Type	n/a	n/a	n/a	n/a	2 / Centrifugal
	Fan Diameter (in)	n/a	n/a	n/a	n/a	18 x 15 / 15 X 11
Medium Static High Eff*	Motor Qty / Drive type	n/a	n/a	1 / Belt	1 / Belt	1 / Belt
	Max BHP	n/a	n/a	6.5	6.5	10.5
	RPM range	n/a	n/a	835 – 1021	755 – 923	857 – 1047
	Motor frame size	n/a	n/a	184T	184T	213T
	Fan Qty / Type	n/a	n/a	2 / Centrifugal	2 / Centrifugal	2 / Centrifugal
	Fan Diameter (in)	n/a	n/a	18 x 15/15 x 11	18 x 15/15 x 11	18 x 15 / 15 X 11
High Static High Eff*	Motor Qty / Drive type	n/a	1 / Belt	1 / Belt	1 / Belt	2 / Belt
	Max BHP	n/a	6.5	8.7	8.7	11.9
	RPM range	n/a	882 – 1078	941 – 1176	827 – 1010	1021 – 1281
	Motor frame size	n/a	184T	213T	213T	215T
	Fan Qty / Type	n/a	2 / Centrifugal	2 / Centrifugal	2 / Centrifugal	2 / Centrifugal
	Fan Diameter (in)	n/a	18 x 15/15 x 11	18 x 15/15 x 11	18 x 15/15 x 11	18 x 15 / 15 X 11
Cond. Coil (Circuit A)						
	Coil type	RTPF	RTPF	RTPF	RTPF	RTPF
	Coil Length (in)	70	70	82	75	95
	Coil Height (in)	44	44	44	52	52
	Total face area (ft2)	21.4	21.4	25.1	27.1	34.3
Cond. Coil (Circuit B)						
	Coil type	RTPF	RTPF	RTPF	RTPF	RTPF
	Coil Length (in)	70	70	57	75	95
	Coil Height (in)	44	44	44	52	52
	Total face area (ft2)	21.4	21.4	17.4	27.1	34.3
Cond. fan / motor						
	Qty / Motor drive type	3 / direct	3 / direct	4 / direct	4 / direct	6 / direct
	Motor HP / RPM	1/4 / 1100	1/4 / 1100	1/4 / 1100	1/4 / 1100	1/4 / 1100
	Fan diameter (in)	22	22	22	22	22
Filters						
	RA Filter # / size (in)	6 / 20 x 25 x 2	6 / 20 x 25 x 2	6 / 20 x 25 x 2	9 / 16 x 25 x 2	9 / 16 x 25 x 2
	OA inlet screen # / size (in)	4 / 16 x 25 x 1	4 / 16 x 25 x 1	4 / 16 x 25 x 1	4 / 16 x 25 x 1	4 / 16 x 25 x 1

* Section 313 of the Energy Independence and Security Act of 2007 (EISA 2007) mandates that the efficiency of general purpose motors we use in our Light Commercial Rooftops rated at 5.0 HP and larger be increased on or after December 19, 2010. We will offer both high and standard efficient motors until inventory is depleted and then shift over solely to the high efficient motors only.

Table 8 – PHYSICAL DATA (HEATING) 15 - 27.5 TONS

	48TC*D17	48TC*D20	48TC*D24	48TC*D28	48TC*D30
Gas Connection					
# of Gas Valves	1	1	1	1	1
Nat. gas supply line press (in. w.g.) / (PSIG)	5 – 13 / 0.18 – 0.47	5 – 13 / 0.18 – 0.47	5 – 13 / 0.18 – 0.47	5 – 13 / 0.18 – 0.47	5 – 13 / 0.18 – 0.47
Propane supply line press (in. w.g.) / (PSIG)	11 – 13 / 0.40 – 0.47	11 – 13 / 0.40 – 0.47	11 – 13 / 0.40 – 0.47	11 – 13 / 0.40 – 0.47	11 – 13 / 0.40 – 0.47
Heat Anticipator Setting (Amps)					
1st stage	0.14	0.14	0.14	0.14	0.14
2nd stage	0.14	0.14	0.14	0.14	0.14
Natural Gas Heat					
LOW # of stages / # of burners (total)	2 / 5	2 / 5	2 / 5	2 / 5	2 / 5
LOW Connection size	3/4 – in NPT	3/4 – in NPT	3/4 – in NPT	3/4 – in NPT	3/4 – in NPT
LOW Rollout switch opens / closes	195 / 115	195 / 115	195 / 115	195 / 115	195 / 115
LOW Temperature rise range (F)	25 – 55	25 – 55	25 – 55	25 – 55	25 – 55
MED # of stages / # of burners (total)	2 / 7	2 / 7	2 / 7	2 / 7	2 / 7
MED Connection size	3/4 – in NPT	3/4 – in NPT	3/4 – in NPT	3/4 – in NPT	3/4 – in NPT
MED Rollout switch opens / closes	195 / 115	195 / 115	195 / 115	195 / 115	195 / 115
MED Temperature rise range (F)	30 – 60	30 – 60	30 – 60	30 – 60	30 – 60
HIGH # of stages / # of burners (total)	2 / 10	2 / 10	2 / 10	2 / 10	2 / 10
HIGH Connection size	3/4 – in NPT	3/4 – in NPT	3/4 – in NPT	3/4 – in NPT	3/4 – in NPT
HIGH Rollout switch opens / closes	195 / 115	195 / 115	195 / 115	195 / 115	195 / 115
HIGH Temperature rise range (F)	35 – 65	35 – 65	35 – 65	35 – 65	35 – 65
Liquid Propane Heat					
LOW # of stages / # of burners (total)	2 / 5	2 / 5	2 / 5	2 / 5	2 / 5
LOW Connection size	3/4 – in NPT	3/4 – in NPT	3/4 – in NPT	3/4 – in NPT	3/4 – in NPT
LOW Rollout switch opens / closes	195 / 115	195 / 115	195 / 115	195 / 115	195 / 115
LOW Temperature rise range (F)	25 – 55	25 – 55	25 – 55	25 – 55	25 – 55
MED # of stages / # of burners (total)	2 / 7	2 / 7	2 / 7	2 / 7	2 / 7
MED Connection size	3/4 – in NPT	3/4 – in NPT	3/4 – in NPT	3/4 – in NPT	3/4 – in NPT
MED Rollout switch opens / closes	195 / 115	196 / 115	197 / 115	198 / 115	198 / 115
MED Temperature rise range (F)	30 – 60	30 – 60	30 – 60	30 – 60	30 – 60
HIGH # of stages / # of burners (total)	2 / 10	2 / 10	2 / 10	2 / 10	2 / 10
HIGH Connection size	3/4 – in NPT	3/4 – in NPT	3/4 – in NPT	3/4 – in NPT	3/4 – in NPT
HIGH Rollout switch opens / closes	195 / 115	195 / 115	195 / 115	195 / 115	195 / 115
HIGH Temperature rise range (F)	35 – 65	35 – 65	35 – 65	35 – 65	35 – 65

DIMENSIONS

NOTES:

1. DIMENSIONS ARE IN INCHES. DIMENSIONS IN [ ] ARE IN MILLIMETERS.
2. CENTER OF GRAVITY
3. DIRECTION OF AIR FLOW

	CONNECTION SIZES
A	1 3/8" DIA [35] FIELD POWER SUPPLY KNOCKOUT
B	3" DIA [76] FIELD POWER SUPPLY KNOCKOUT
C	3 5/8" DIA [92] FIELD POWER SUPPLY KNOCKOUT
D	7/8" DIA [22] FIELD CONTROL WIRING HOLE
E	3/4"-14 NPT CONDENSATE DRAIN
F	3/4"-14 NPT GAS CONNECTION (NOT SHOWN)

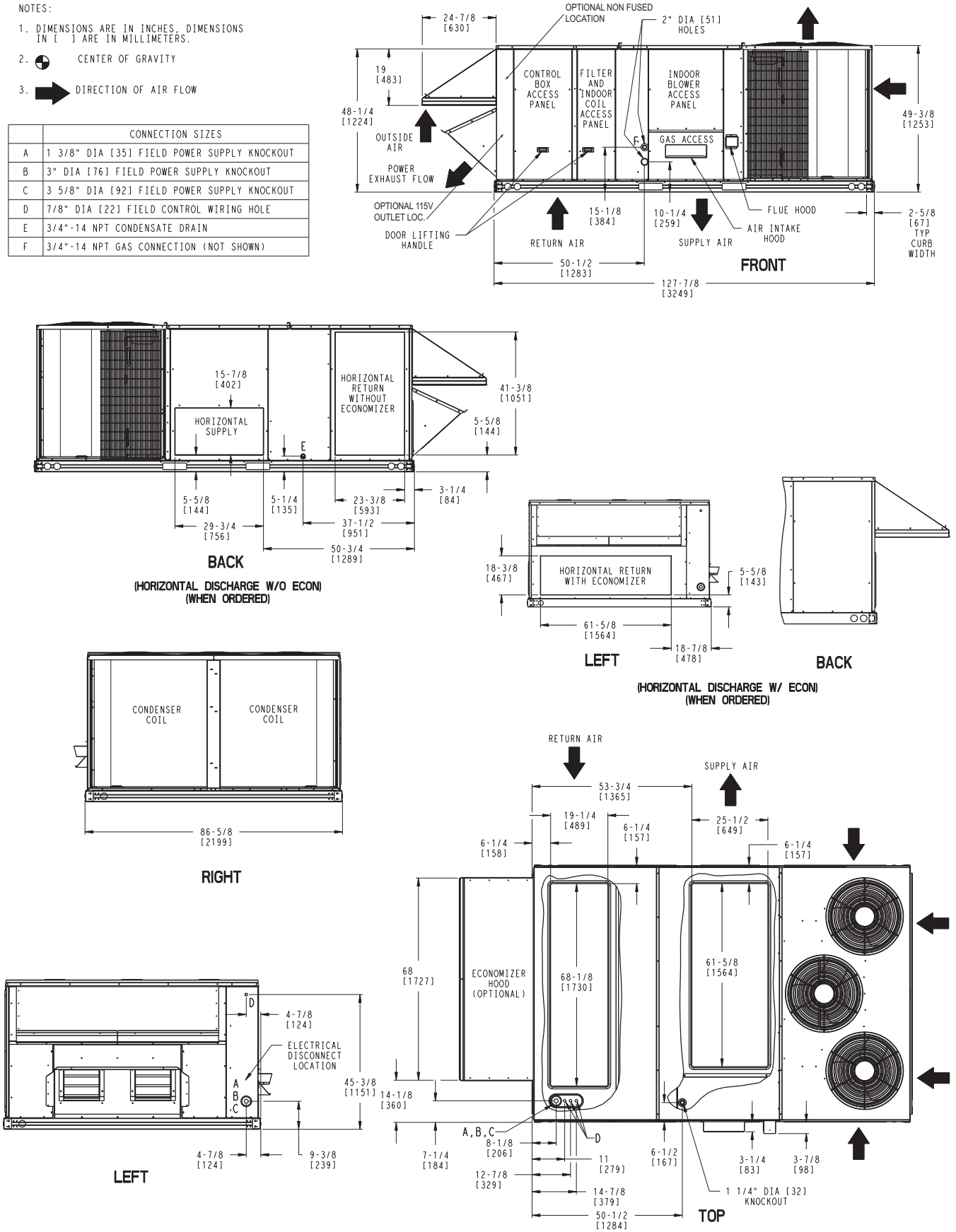

Fig. 1 - Dimensions 48TC*D17-20

48TC

DIMENSIONS (cont.)

Novation - All Aluminum Coil Design

UNIT	MAX UNIT WEIGHT		CORNER WEIGHT (A)		CORNER WEIGHT (B)		CORNER WEIGHT (C)		CORNER WEIGHT (D)		C.G.		
	LBS.	KG.	LBS.	KG.	LBS.	KG.	LBS.	KG.	LBS.	KG.	X	Y	Z
48TC17	2160	980	434	197	443	201	479	217	469	213	44 3/4 [1137]	64 17/32 [1638]	16 1/2 [419]
48TC20	2175	987	437	198	447	203	483	219	472	214	44 3/4 [1137]	64 17/32 [1638]	16 1/2 [419]

RTPF - Round Tube/Plate Fin Coil Design

UNIT	MAX UNIT WEIGHT		CORNER WEIGHT (A)		CORNER WEIGHT (B)		CORNER WEIGHT (C)		CORNER WEIGHT (D)		C.G.		
	LBS.	KG.	LBS.	KG.	LBS.	KG.	LBS.	KG.	LBS.	KG.	X	Y	Z
48TC17	2355	1068	438	199	519	235	515	234	435	197	42 29/32 [1090]	69 1/4 [1759]	16 1/2 [419]
48TC20	2370	1075	441	200	523	237	519	235	438	199	42 29/32 [1090]	69 1/4 [1759]	16 1/2 [419]

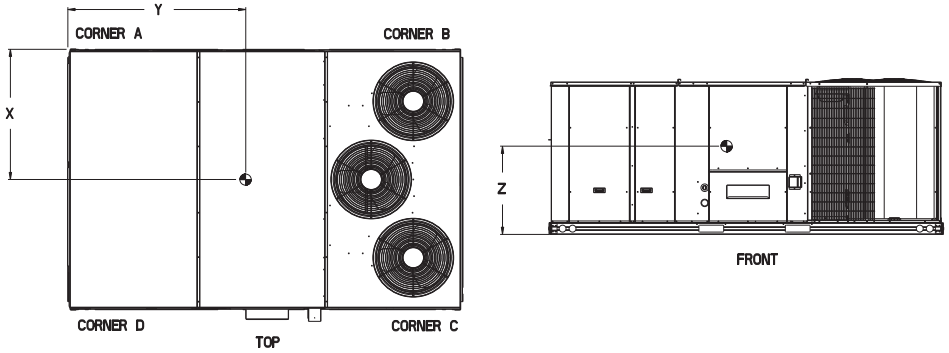

C11162

Fig. 2 - Dimensions 48TC*D17-20

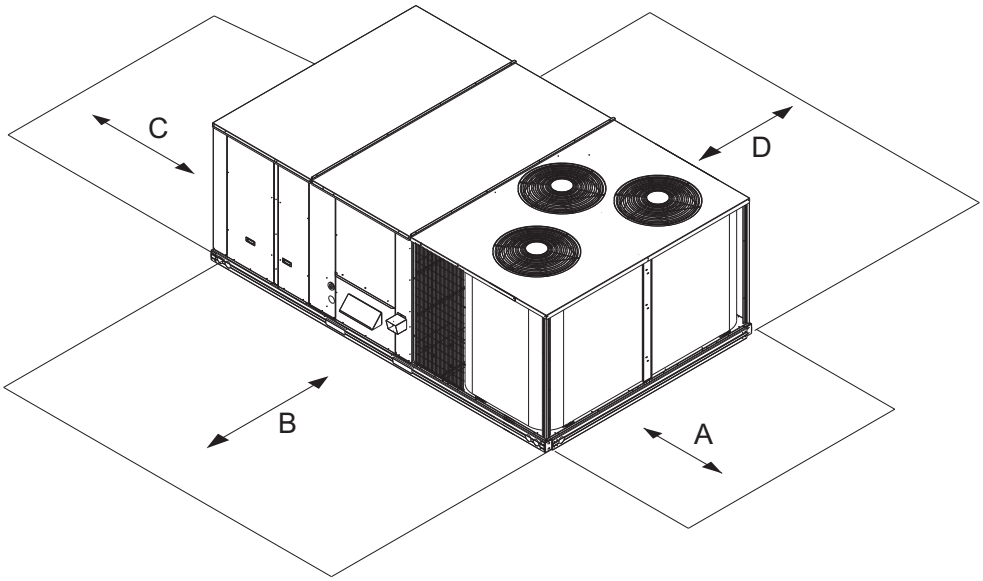

C11303

Fig. 3 - Service Clearance

LOC	DIMENSION	CONDITION
A	36–in	Recommended clearance for airflow and service.
B	42–in	Recommended clearance for airflow and service.
C	18–in	1. No CO. 2. No Economizer. 3. No field installed disconnect on economizer hood side (Factory–installed disconnect installed.
	36–in	1. CO installed. 2. Vertical surface behind servicer is electrically non–conductive (e.g., wood, fiberglass).
	42–in	1. CO installed. 2 Vertical surface behind servicer is electrically conductive (e.g., metal, masonry)
	96–in	1. Economizer and/or Power Exhaust installed. 2. Check for sources of flue products within 10–ft of economizer fresh air intake.
D	42–in	Recommended clearance for service.

DIMENSIONS (cont.)

UNIT SIZE	"A"	ROOF CURB ACCESSORY
17,20	1′-2" [356.0] 2′-0" [610.0]	CRRFCURB045A00 CRRFCURB046A00

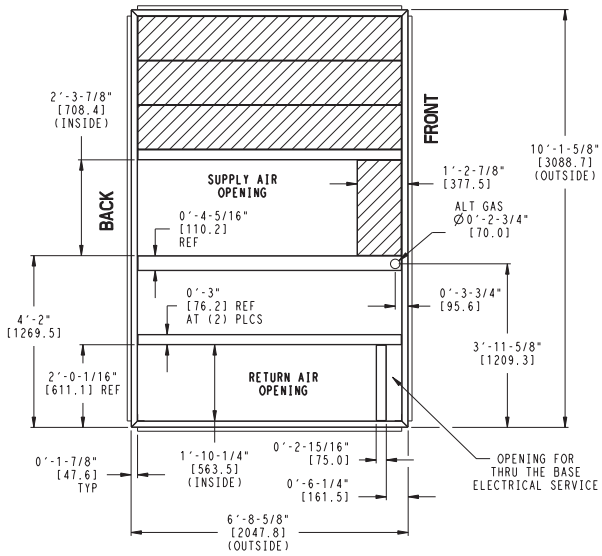

NOTES:

1 ROOF CURB ACCESSORY IS SHIPPED UNASSEMBLED.

2 DIMENSIONS IN [ ] ARE IN MILLIMETERS.

3 ROOF CURB GALVANIZED STEEL.

4 ATTACH DUCTWORK TO CURB (FLANGES ON DUCT REST ON CURB)

5 SERVICE CLEARANCE 4 ft ON EACH SIDE

DIRECTION OF AIR FLOW

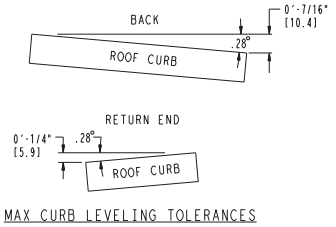

MAX CURB LEVELING TOLERANCES

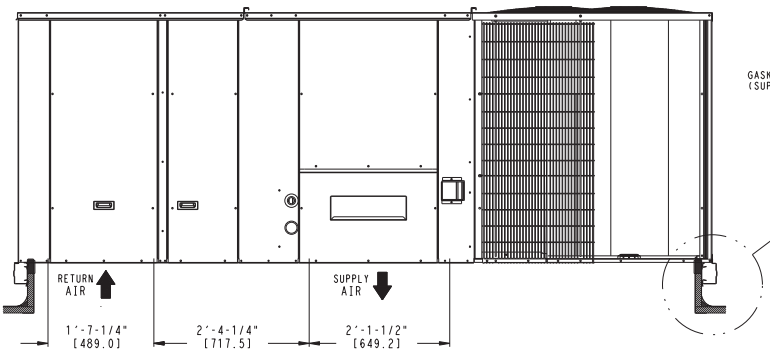

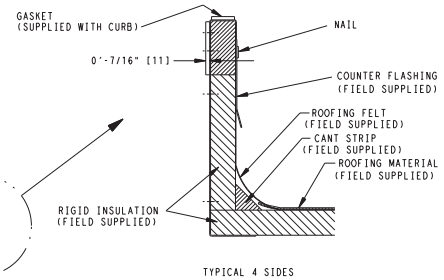

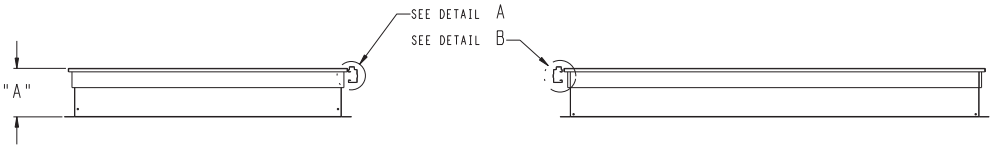

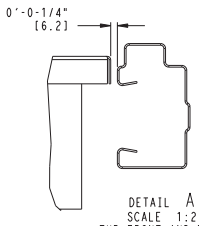

DETAIL A
SCALE 1:2
TYP FRONT AND BACK

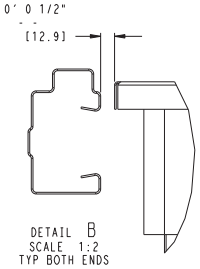

DETAIL B
SCALE 1:2
TYP BOTH ENDS

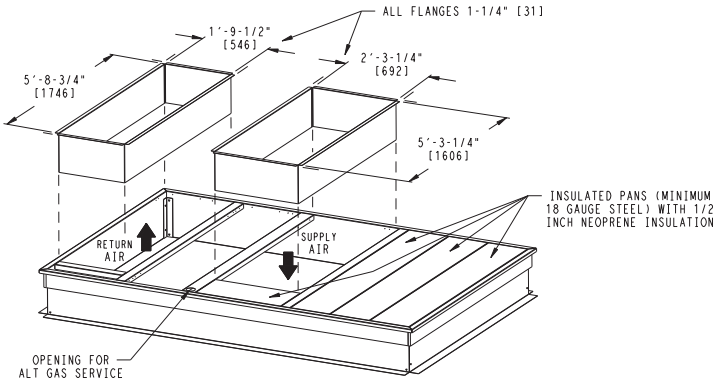

C09052

Fig. 4 - Curb Dimensions 48TC*D17-20

48TC

DIMENSIONS (cont.)

	CONNECTION SIZES
A	1 3/8" DIA [35] FIELD POWER SUPPLY KNOCKOUT
B	3" DIA [76] FIELD POWER SUPPLY KNOCKOUT
C	3 5/8" DIA [92] FIELD POWER SUPPLY KNOCKOUT
D	7/8" DIA [22] FIELD CONTROL WIRING HOLE
E	3/4"-14 NPT CONDENSATE DRAIN
F	3/4"-14 NPT GAS CONNECTION (NOT SHOWN)

UNIT	G	H
24 SIZE	41-3/8 [1051]	49-3/8 [1253]
28 SIZE	49-3/8 [1253]	57-3/8 [1456]

NOTES:

1. DIMENSIONS ARE IN INCHES, DIMENSIONS IN [ ] ARE IN MILLIMETERS.
2. CENTER OF GRAVITY
3. DIRECTION OF AIR FLOW

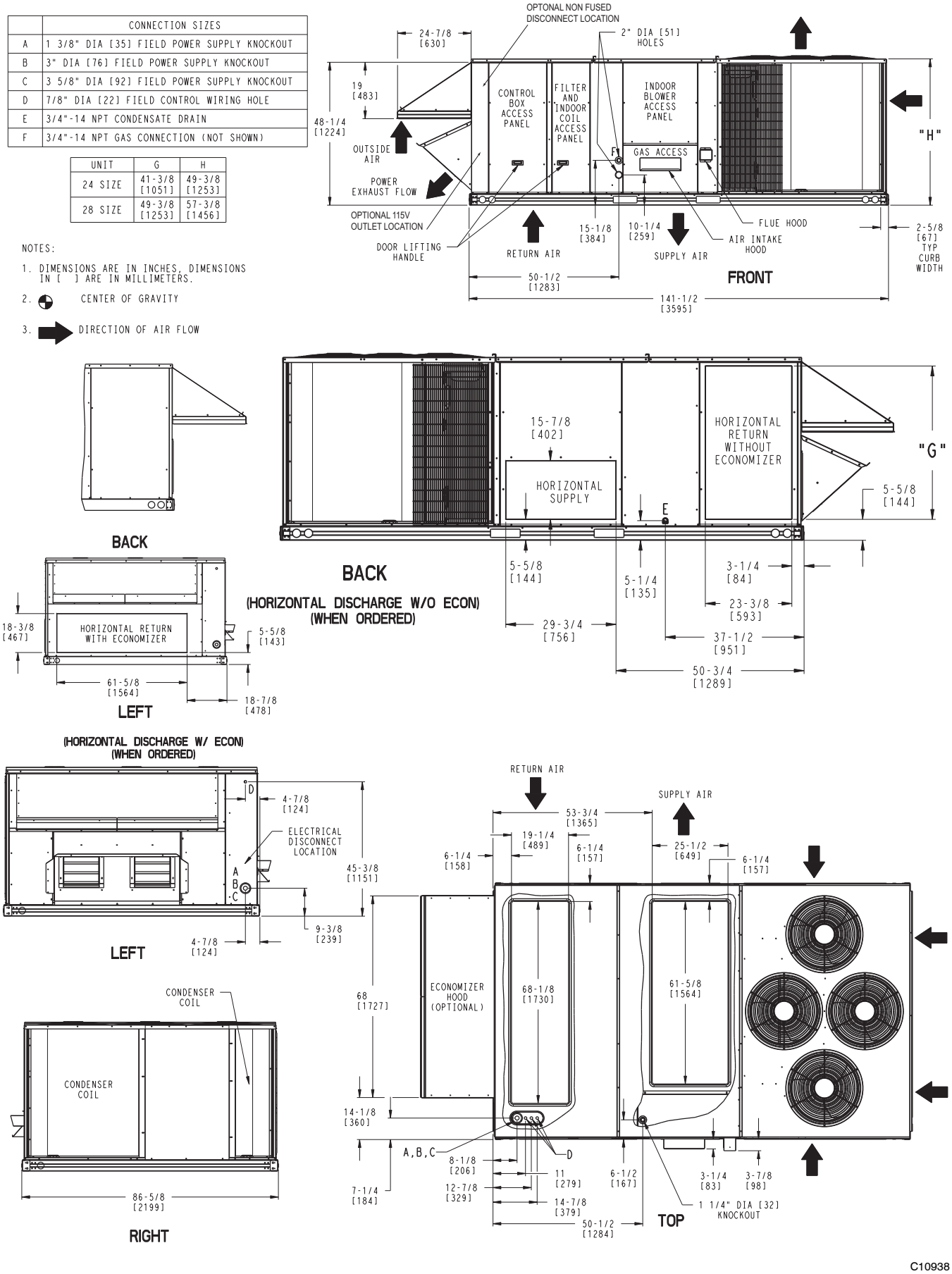

Fig. 5 - Dimensions 48TC*D24-28

DIMENSIONS (cont.)

Novation - All Aluminum Coil Design

UNIT	MAX UNIT WEIGHT		CORNER WEIGHT (A)		CORNER WEIGHT (B)		CORNER WEIGHT (C)		CORNER WEIGHT (D)		C.G.		
	LBS.	KG.	LBS.	KG.	LBS.	KG.	LBS.	KG.	LBS.	KG.	X	Y	Z
48TC24	2325	1055	383	174	540	245	623	283	442	200	46 5/32 [1173]	82 5/8 [2098]	16 1/2 [419]
48TC28	2454	1113	408	185	575	261	664	301	471	214	46 5/32 [1173]	82 5/8 [2098]	19 [483]

RTPF - Round Tube/Plate Fin Coil Design

UNIT	MAX UNIT WEIGHT		CORNER WEIGHT (A)		CORNER WEIGHT (B)		CORNER WEIGHT (C)		CORNER WEIGHT (D)		C.G.		
	LBS.	KG.	LBS.	KG.	LBS.	KG.	LBS.	KG.	LBS.	KG.	X	Y	Z
48TC24	2516	1141	558	253	548	249	479	217	487	221	40 5/32 [1020]	70 [1778]	16 1/2 [419]
48TC28	2652	1203	571	259	564	256	528	239	534	242	41 21/32 [1058]	70 1/4 [1784]	19 [483]

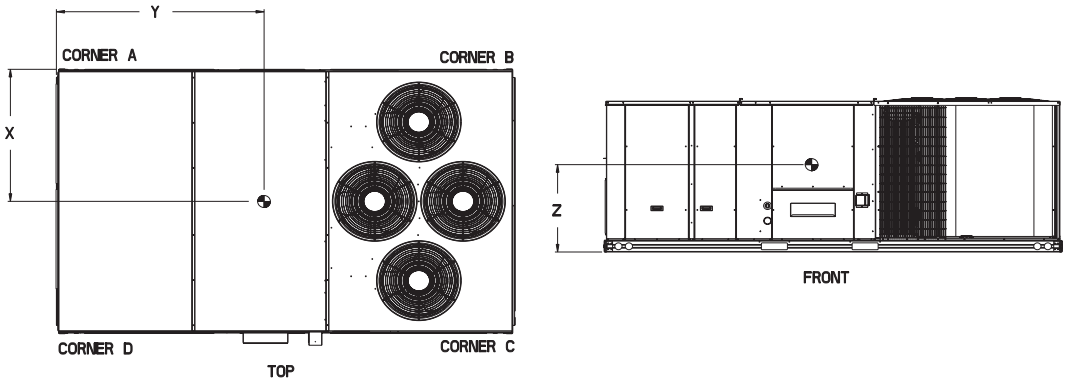

C11163

Fig. 6 - 48TCD24-28

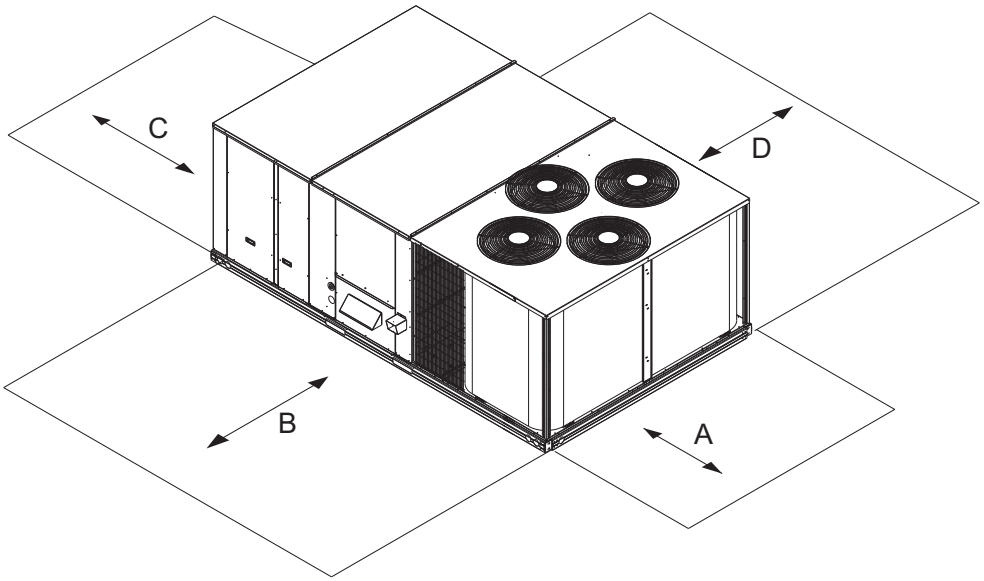

C11304

Fig. 7 - Service Clearance

LOC	DIMENSION	CONDITION
A	36–in	Recommended clearance for airflow and service.
B	42–in	Recommended clearance for airflow and service.
C	18–in	1. No CO. 2. No Economizer. 3. No field installed disconnect on economizer hood side (Factory–installed disconnect installed.
	36–in	1. CO installed. 2. Vertical surface behind servicer is electrically non–conductive (e.g., wood, fiberglass).
	42–in	1. CO installed. 2 Vertical surface behind servicer is electrically conductive (e.g., metal, masonry)
	96–in	1. Economizer and/or Power Exhaust installed. 2. Check for sources of flue products within 10–ft of economizer fresh air intake.
D	42–in	Recommended clearance for service.

DIMENSIONS (cont.)

UNIT SIZE	"A"	ROOF CURB ACCESSORY
24,28	1′-2" [356.0] 2′-0" [610.0]	CRRFCURB047A00 CRRFCURB048A00

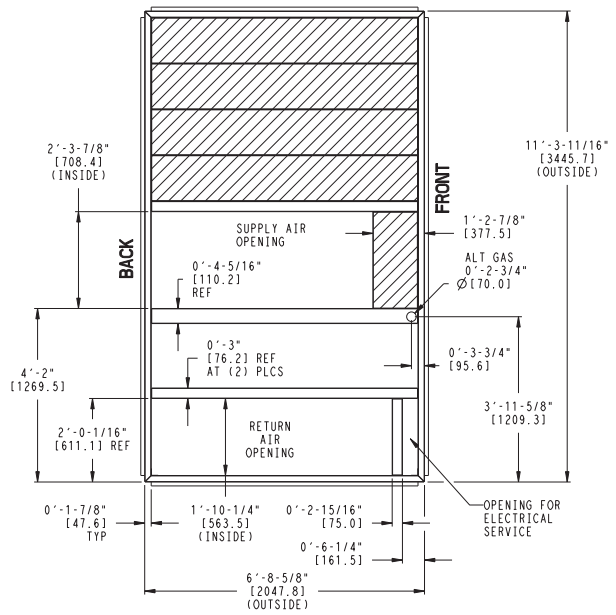

NOTES:

1 ROOF CURB ACCESSORY IS SHIPPED UNASSEMBLED.

2 DIMENSIONS IN [ ] ARE IN MILLIMETERS.

3 ROOF CURB GALVANIZED STEEL.

4 ATTACH DUCTWORK TO CURB (FLANGES ON DUCT REST ON CURB)

5 SERVICE CLEARANCE 4 ft ON EACH SIDE

DIRECTION OF AIR FLOW

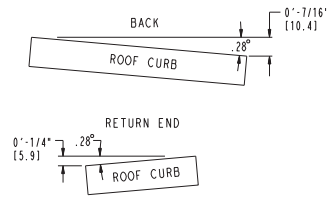

MAX CURB LEVELING TOLERANCES

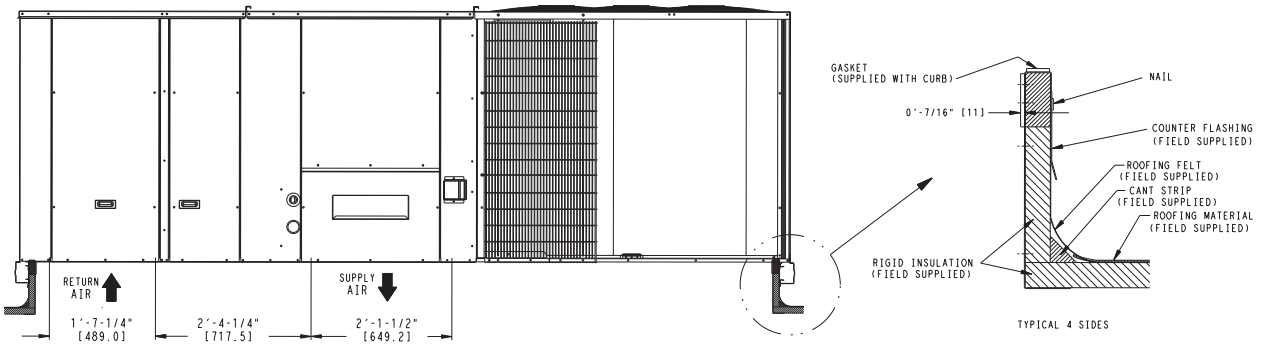

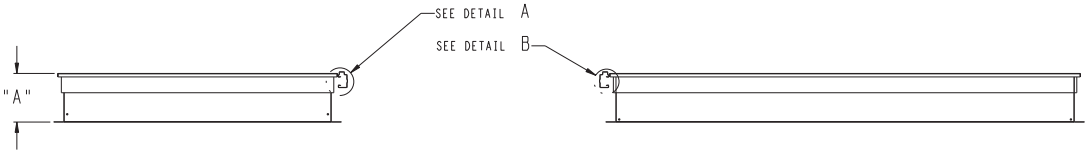

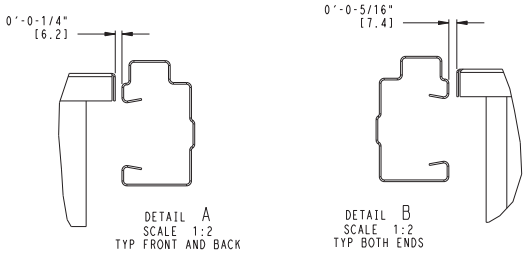

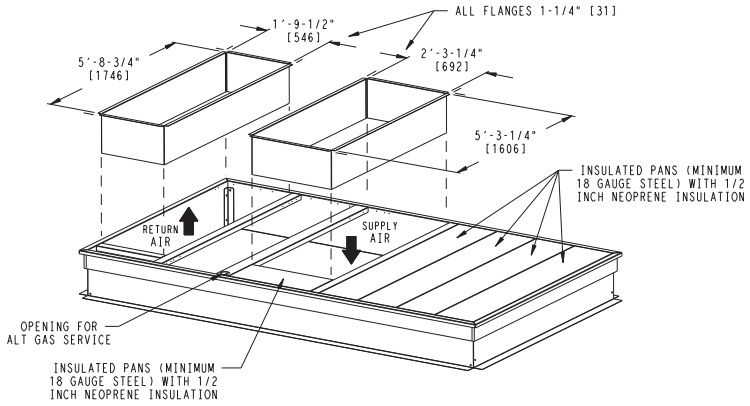

C09100

Fig. 8 – Curb Dimensions

DIMENSIONS (cont.)

	CONNECTION SIZES
A	1 3/8" DIA [35] FIELD POWER SUPPLY KNOCKOUT
B	3" DIA [76] FIELD POWER SUPPLY KNOCKOUT
C	3 5/8" DIA [92] FIELD POWER SUPPLY KNOCKOUT
D	7/8" DIA [22] FIELD CONTROL WIRING HOLE
E	3/4"-14 NPT CONDENSATE DRAIN
F	3/4"-14 NPT GAS CONNECTION (NOT SHOWN)

NOTES:

1. DIMENSIONS ARE IN INCHES, DIMENSIONS IN [ ] ARE IN MILLIMETERS.
2. CENTER OF GRAVITY
3. DIRECTION OF AIR FLOW

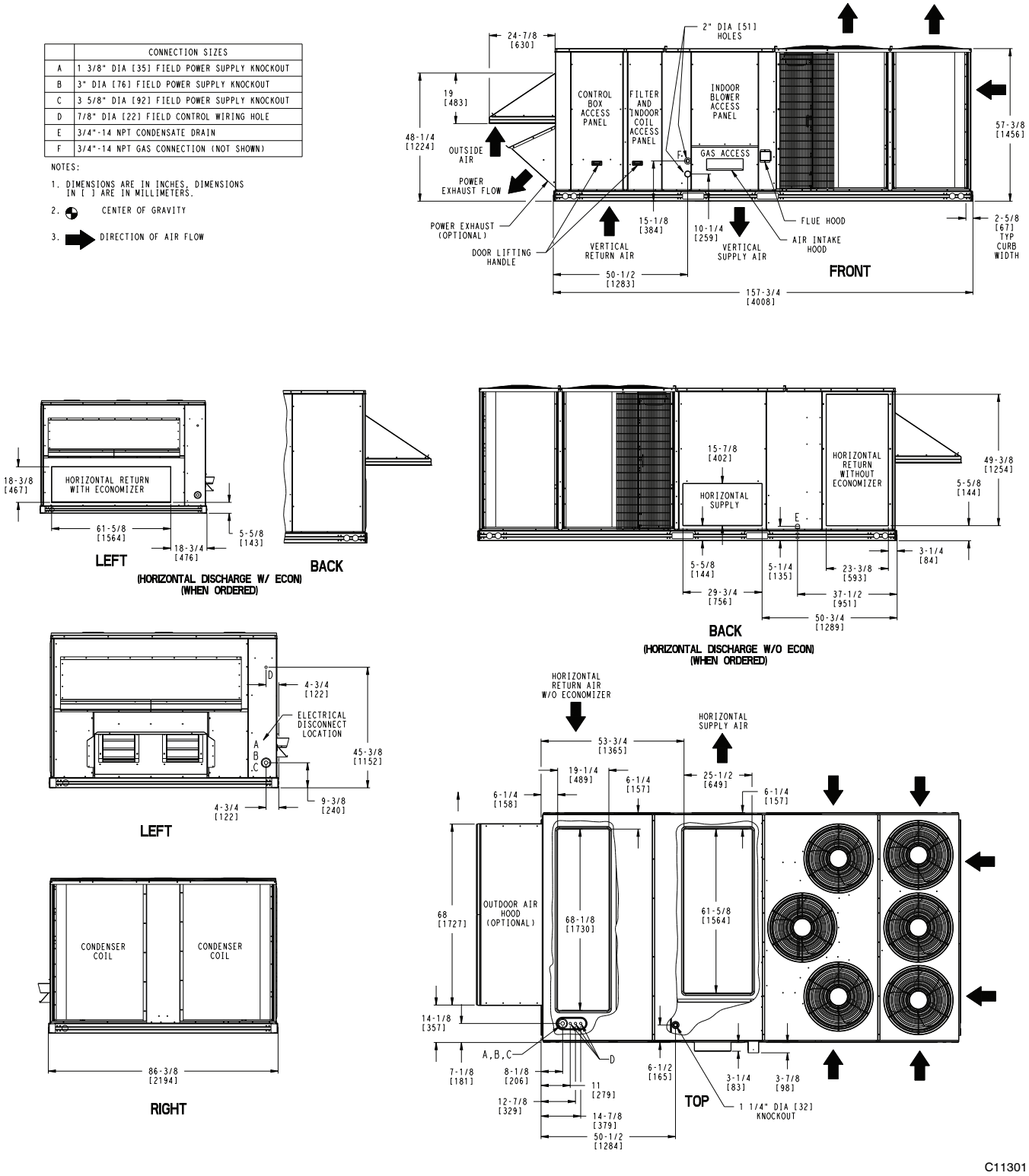

Fig. 9 – Dimensions 48TC*D30

48TC

DIMENSIONS (cont.)

UNIT	STD UNIT WEIGHT *		CORNER WEIGHT (A)		CORNER WEIGHT (B)		CORNER WEIGHT (C)		CORNER WEIGHT (D)		C.G.		
	LBS.	KG.	LBS.	KG.	LBS.	KG.	LBS.	KG.	LBS.	KG.	X	Y	Z
48TC30	2640	1200	697	317	595	270	621	282	728	331	44 [1118]	72 1/2 [1842]	19 [483]

* STANDARD UNIT WEIGHT IS WITH LOW GAS HEAT AND WITHOUT PACKAGING.
FOR OTHER OPTIONS AND ACCESSORIES, REFER TO THE PRODUCT DATA CATALOG.

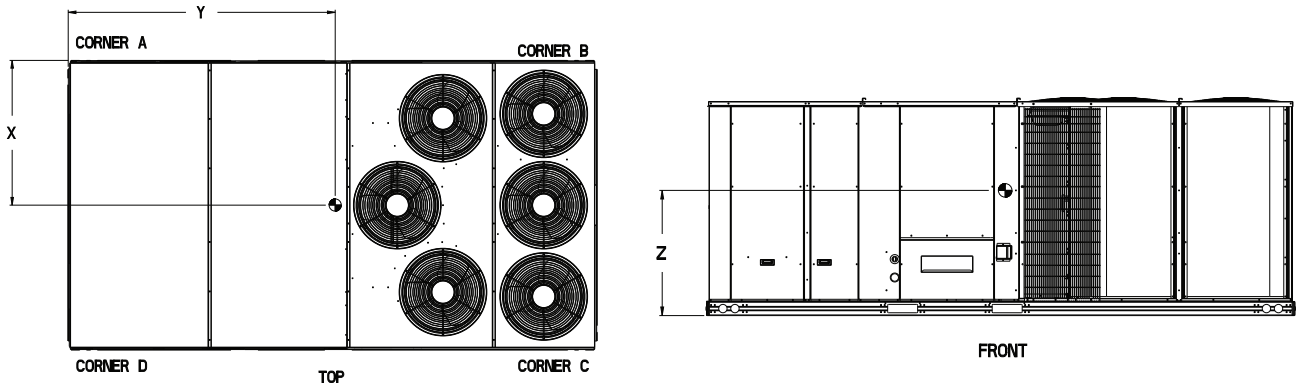

C11302

Fig. 10 - 48TC30

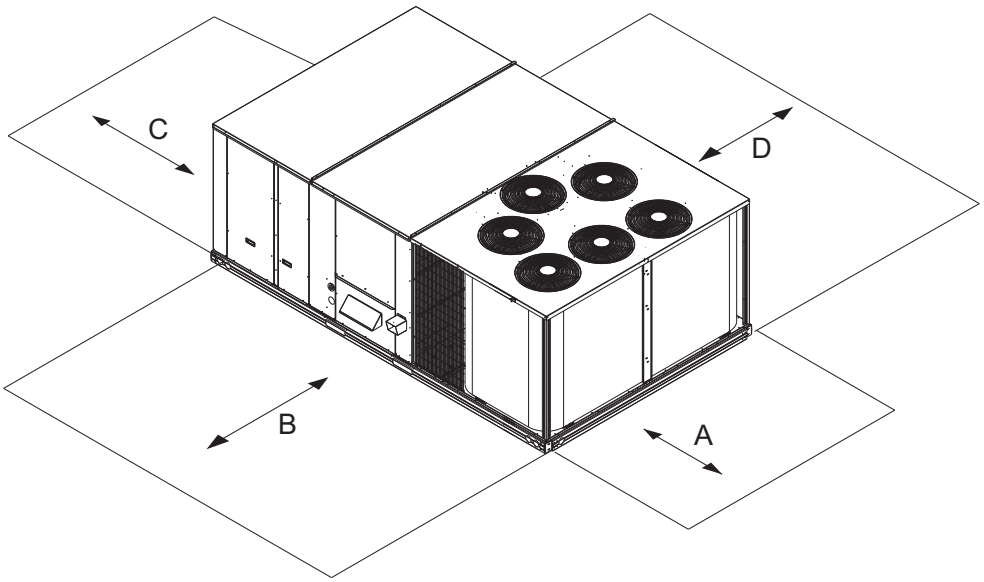

C11305

LOC	DIMENSION	CONDITION
A	36–in	Recommended clearance for airflow and service.
B	42–in	Recommended clearance for airflow and service.
C	18–in	1. No CO. 2. No Economizer. 3. No field installed disconnect on economizer hood side (Factory–installed disconnect installed.
	36–in	1. CO installed. 2. Vertical surface behind servicer is electrically non–conductive (e.g., wood, fiberglass).
	42–in	1. CO installed. 2 Vertical surface behind servicer is electrically conductive (e.g., metal, masonry)
	96–in	1. Economizer and/or Power Exhaust installed. 2. Check for sources of flue products within 10–ft of economizer fresh air intake.
D	42–in	Recommended clearance for service.

DIMENSIONS (cont.)

UNIT SIZE	"A"	ROOF CURB ACCESSORY
30	1′-2" [356.0] 2′-0" [610.0]	CRRFCURB049A00 CRRFCURB050A00

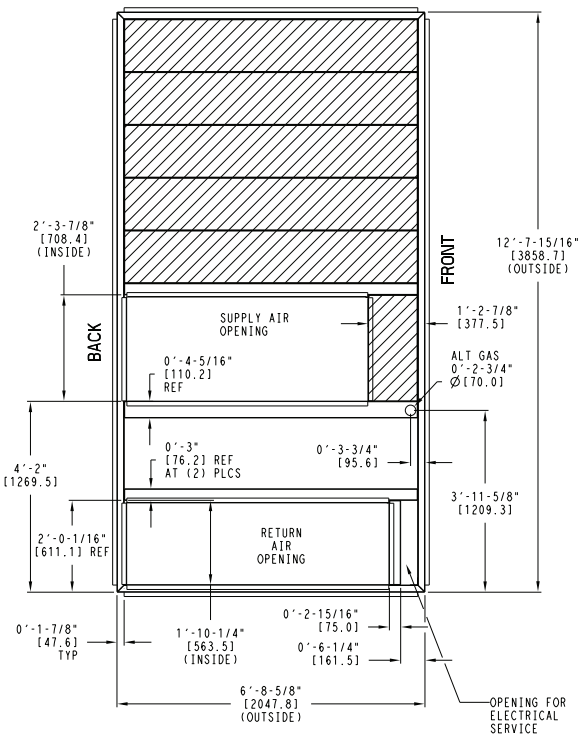

NOTES:
1 ROOF CURB ACCESSORY IS SHIPPED UNASSEMBLED.
2 BOLT HEADS TO BE ON INSIDE OF FLANGE. CLEARANCE IS [11] 0-0-7/16" TYP ALL CORNERS.
3 DIMENSIONS IN [ ] ARE IN MILLIMETERS.
4 ROOF CURB GALVANIZED STEEL.
5 ATTACH DUCTWORK TO CURB (FLANGES ON DUCT REST ON CURB)
6 SERVICE CLEARANCE 4 ft ON EACH SIDE
7 GAS SERVICE PLATE IS PART OF A SEPERATELY SHIPPED ACCESSORY PACKAGE.
8 GAS SERVICE PLATE CAN BE USED WITH EITHER ACCESSORY ROOFCURB.

➡ DIRECTION OF AIR FLOW

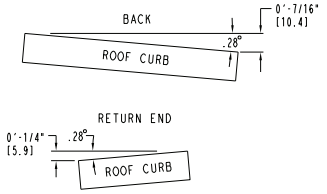

MAX CURB LEVELING TOLERANCES

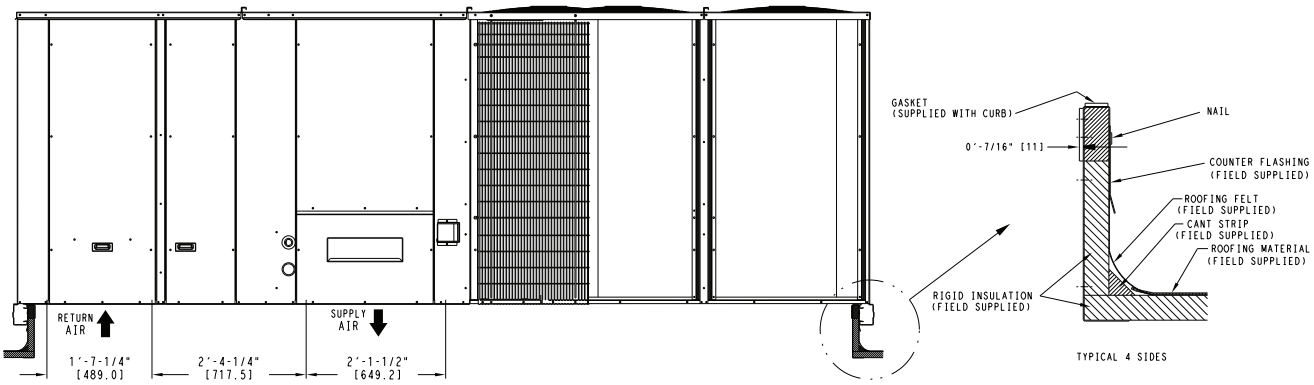

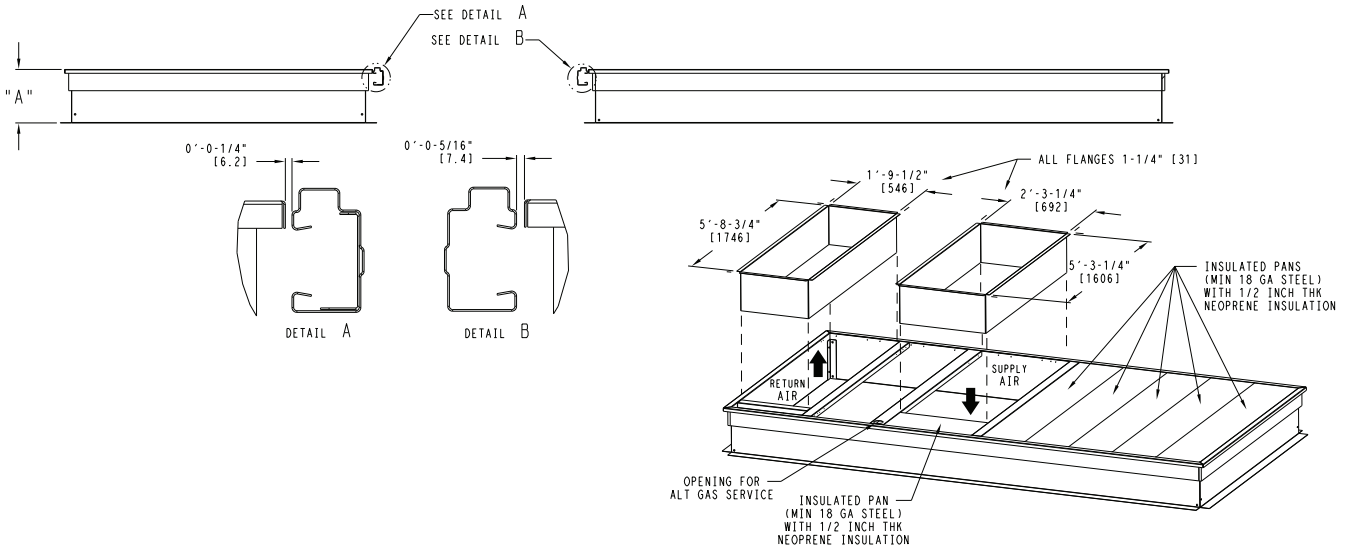

C11224

Fig. 11 - Curb Dimensions

48TC

OPTIONS AND ACCESSORIES WEIGHT ADDERS

BASE UNIT WITH OPTIONS AND ACCESSORIES (Weight Adders)	MAX WEIGHT ADDER									
	48TC*17		48TC*20		48TC*24		48TC*28		48TC*30	
	lb	kg	lb	kg	lb	kg	lb	kg	lb	kg
Humidi–MiZer[1]	83	38	83	38	83	38	92	42	n/a	n/a
Base Unit Operating Weight	1907	865	1922	872	2072	940	2197	997	2640	1197
Power Exhaust	125	57	125	57	125	57	125	57	125	57
Economizer	170	77	170	77	170	77	195	88	195	88
Copper Tube/Fin Evaporator Coil	110	50	110	50	135	61	161	73	173	78
Low Gas Heat	85	39	85	39	85	39	85	39	85	39
Medium Gas Heat	90	41	90	41	90	41	90	41	90	41
High Gas Heat	113	51	113	51	113	51	113	51	113	51
Flue Discharge Deflector	7	3	7	3	7	3	7	3	7	3
Roof Curb 14–in (356mm)	240	109	240	109	240	109	240	109	255	116
Roof Curb 24–in (610mm)	340	154	340	154	340	154	340	154	355	161
Louvered Hail Guard	60	27	60	27	120	54	135	61	150	68
CO_2 sensor	5	2	5	2	5	2	5	2	5	2
Return Smoke Detector	5	2	5	2	5	2	5	2	5	2
Supply Smoke Detector	5	2	5	2	5	2	5	2	5	2
Fan/Filter Status Switch	2	1	2	1	2	1	2	1	2	1
Non–Fused Disconnect	15	7	15	7	15	7	15	7	15	7
Powered Convenience Outlet	35	16	35	16	35	16	35	16	35	16
Non–Powered Convenience Outlet	5	2	5	2	5	2	5	2	5	2
Enthalpy Sensor	2	1	2	1	2	1	2	1	2	1
Differential Enthalpy Sensor	3	1	3	1	3	1	3	1	3	1
Two Position Motorized Damper	50	23	50	23	50	23	65	29	65	29
Manual Damper	35	16	35	16	35	16	40	18	40	18
Field Filter Track 4–in (102mm)	12	5	12	5	12	5	12	5	12	5
MotorMaster Controller	35	16	35	16	35	16	35	16	35	16
Medium Static Motor/Drive	5	2	6	3	6	3	6	3	10	5
High Static Motor/Drive	11	5	12	5	16	7	16	7	20	9
Barometric Relief Hood (Horizontal)	25	11	25	11	25	11	25	11	25	11

[1] For Humidi–MiZer add MotorMaster Controller.

Min operating ambient temp (cooling):

In mechanical cooling mode, your Carrier rooftop unit can safely operate down to an outdoor ambient temperature of 30°F (-1°C). It is possible to provide cooling at lower outdoor ambient temperatures by using less outside air, economizers, and/or accessory low ambient kits.

Max operating ambient temp (cooling):

The maximum operating ambient temperature for cooling mode is 115°F (46°C). While cooling operation above 115°F (46°C) may be possible, it could cause either a reduction in performance, reliability, or a protective action by the unit's internal safety devices.

Min mixed air temp (heating):

Using the factory settings, the minimum temperatures for the mixed air (the combined temperature of the warm return air and the cold outdoor air) entering the dimpled, gas heat exchangers are:

Aluminized	Stainless Steel
50°F (10°C) continuous	40°F (4°C) continuous
45°F (7°C) intermittent	35°F (2°C) intermittent

Operating at lower mixed-air temperatures may be possible, if a field-supplied, outdoor air thermostat initiates both heat stages when the temperature is less than the minimum temperatures listed above. Please contact your local Carrier representative for assistance.

Min and max airflow (heating and cooling):

To maintain safe and reliable operation of your rooftop, operate within the heating airflow limits during heating mode and cooling airflow limits during cooling mode. Operating above the max may cause blow-off, undesired airflow noise, or airflow related problems with the rooftop unit. Operating below the min may cause problems with coil freeze-up and unsafe heating operation. Heating and cooling limitations differ when evaluating operating CFM, the minimum value is the HIGHER of the cooling and heating minimum CFM values published in Table 5 and the maximum value is the LOWER of the cooling and heating minimum values published in Table 5.

Heating-to-cooling changeover:

Your unit will automatically change from heating to cooling mode when using a thermostat with an auto-change-over feature.

Airflow:

All units are draw-through in cooling mode and blow-through in heating mode.

Outdoor air application strategies:

Economizers reduce operating expenses and compressor run time by providing a free source of cooling and a means of ventilation to match application changing needs. In fact, they should be considered for most applications. Also, consider the various economizer control methods and their benefits, as well as sensors required to accomplish your application goals. Please contact your local Carrier representative for assistance.

Motor limits, break horsepower (BHP):

Due to internal design of Carrier units, the air path, and specially designed motors, the full horsepower (maximum continuous BHP) band, as listed in Physical Data Table Cooling, can be used with the utmost confidence. There is no need for extra safety factors, as Carrier motors are designed and rigorously tested to use the entire, listed BHP range without either nuisance tripping or premature motor failure.

Propane heating:

Propane has different physical qualities than natural gas. As a result, Propane requires different fuel to air mixture. To optimize the fuel/air mixture for Propane, Carrier sells different burner orifices in an easy to install accessory kit. To select the correct burner orifices or determine the heat capacity for an Propane application, use either the selection software, or the unit's service manual.

High altitude heating:

High altitudes have less oxygen, which affects the fuel/air mixture in heat exchangers. In order to maintain a proper fuel/air mixture, heat exchangers operating in altitudes above 2000 ft (610m) require different orifices. To select the correct burner orifices or determine the heat capacity for a high altitude application, use either the selection software, or the unit's service manual.

High altitudes have less oxygen, which means heat exchangers need less fuel. The new gas orifices in this field-installed kit make the necessary adjustment for high altitude applications. They restore the optimal fuel to air mixture and maintain healthy combustion on altitudes above 2000 ft (610m).

NOTE: Typical natural gas heating value ranges from 975 to 1050 Btu/ft^3 at sea level nationally. The heating value goes down approximately 1.7% per every thousand feet elevation. Standard factory orifices can typically be used up to 2000 ft (610m) elevation without any operational issues.

NOTE: For installations in Canada, the input rating should be derated by 10% for altitudes from 2000 ft (610m) to 4500 ft (1372m) above sea level.

Sizing a rooftop

Bigger isn't necessarily better. While an air conditioner needs to have enough capacity to meet the design loads, it doesn't need excess capacity. In fact, excess capacity typically results in very poor part load performance and humidity control.

Using higher design temperatures than ASHRAE recommends for your location, adding "safety factors" to the calculated load, are all signs of oversizing air conditioners. Oversizing the air conditioner leads to poor humidity control, reduced efficiency, higher utility bills, larger indoor temperature swings, excessive noise, and increased wear and tear on the air conditioner.

Rather than oversizing an air conditioner, engineers should "right-size" or even slightly undersize air conditioners. Correctly sizing an air conditioner controls humidity better; promotes efficiency; reduces utility bills; extends equipment life, and maintains even, comfortable temperatures. Please contact your local Carrier representative for assistance.

Low ambient applications

The optional Carrier economizer can adequately cool your space by bringing in fresh, cool outside air. In fact, when so equipped, accessory low-ambient kit may not be necessary. In low ambient conditions, unless the outdoor air is excessively humid or contaminated, economizer-based "free cooling" is the preferred less costly and energy conscious method.

In low ambient applications where outside air might not be desired (such as contaminated or excessively humid outdoor environments), your Carrier rooftop can operate to ambient temperatures down to -20°F (-29°C) using the recommended accessory Motormaster low ambient controller or down to 25°F (-4°C) with the field installed Winter Start Package.

Application/Selection Option

Selection software by Carrier saves time by performing many of the steps above. Contact your Carrier sales representative for assistance.

Table 9 – COOLING CAPACITIES **2-Stage Cooling** **15 TONS**

48TC*D17				AMBIENT TEMPERATURE											
				85			95			105			115		
				EAT (db)			EAT (db)			EAT (db)			EAT (db)		
				75	80	85	75	80	85	75	80	85	75	80	85
4500 CFM	EAT (wb)	58	TC	159.6	159.1	163.4	148.7	148.4	155.2	136.1	137.1	146.0	122.4	127.2	136.2
			SHC	132.6	149.6	163.4	127.0	143.9	155.2	120.7	137.1	146.0	113.9	127.2	136.2
		62	TC	173.9	173.6	173.3	163.1	162.6	162.2	150.5	150.2	149.9	136.8	136.2	136.9
			SHC	119.4	136.8	153.9	114.1	131.5	148.6	108.2	125.7	142.6	101.9	119.2	135.8
		67	TC	193.4	193.0	192.5	182.5	182.1	181.7	169.9	169.5	169.1	156.0	155.5	155.2
			SHC	102.3	119.7	137.0	97.3	114.8	132.3	91.7	109.4	126.9	85.7	103.5	121.1
		72	TC	213.7	213.2	212.6	203.5	203.0	202.5	191.0	190.5	189.9	177.1	176.6	176.1
			SHC	84.0	101.7	119.2	79.7	97.4	115.0	74.6	92.4	109.9	69.1	86.9	104.6
		76	TC	–	227.8	228.5	–	219.6	219.1	–	207.9	207.4	–	194.1	193.5
			SHC	–	89.9	103.7	–	82.5	100.2	–	78.1	95.8	–	73.0	97.2
5250 CFM	EAT (wb)	58	TC	168.7	168.5	176.4	157.0	158.2	167.7	143.9	148.2	158.0	129.5	137.5	147.4
			SHC	161.3	163.9	176.4	138.9	157.2	167.7	132.4	148.2	158.0	125.4	137.5	147.4
		62	TC	184.2	183.8	183.2	172.3	171.8	171.5	159.1	158.5	159.3	144.4	143.8	147.8
			SHC	129.4	149.6	168.9	123.9	144.0	163.5	117.9	137.9	156.4	111.4	131.3	147.8
		67	TC	204.7	204.0	203.5	193.1	192.6	192.2	179.7	179.2	178.7	164.8	164.3	163.6
			SHC	109.3	129.5	149.6	104.3	124.7	144.9	98.6	119.1	139.4	92.5	113.1	133.3
		72	TC	224.6	224.1	223.6	214.4	213.7	213.1	202.0	201.4	200.7	187.0	186.4	185.8
			SHC	87.5	107.9	128.2	83.4	103.9	124.3	78.6	99.2	119.6	72.9	93.6	114.1
		76	TC	–	239.1	239.6	–	230.6	230.1	–	218.4	217.7	–	204.4	203.7
			SHC	–	92.6	110.2	–	86.4	107.0	–	82.0	102.6	–	77.1	97.8
6000 CFM	EAT (wb)	58	TC	176.9	178.5	188.9	164.3	168.9	179.6	150.3	158.4	169.1	136.1	146.9	157.7
			SHC	157.4	178.5	188.9	151.1	168.9	179.6	144.3	158.4	169.1	136.1	146.9	157.7
		62	TC	193.2	192.7	192.2	180.4	179.7	180.7	166.2	165.6	170.1	150.5	150.0	158.1
			SHC	140.2	162.8	184.2	134.4	156.9	177.8	128.1	150.6	168.9	121.3	143.5	158.1
		67	TC	214.4	213.7	213.0	202.1	201.6	201.0	187.7	187.1	186.4	171.8	171.1	170.4
			SHC	117.3	140.3	163.0	112.1	135.3	158.2	106.2	129.4	152.2	99.8	123.1	145.9
		72	TC	234.9	234.6	234.2	224.0	223.3	222.5	210.9	210.1	209.3	194.9	194.1	193.4
			SHC	92.7	115.9	139.1	88.4	111.8	134.8	83.4	106.8	130.0	77.5	101.0	124.3
		76	TC	–	250.7	250.9	–	240.9	240.1	–	227.5	226.7	–	212.7	211.8
			SHC	–	95.7	118.9	–	92.1	115.3	–	87.4	110.8	–	82.4	105.8
6750 CFM	EAT (wb)	58	TC	182.5	187.4	198.5	169.3	177.4	188.7	156.0	166.4	177.8	142.9	154.4	165.9
			SHC	167.5	187.4	198.5	161.2	177.4	188.7	153.0	166.4	177.8	142.9	154.4	165.9
		62	TC	199.3	198.7	199.6	186.0	185.2	188.9	171.2	170.5	208.4	154.7	155.5	166.2
			SHC	148.6	173.7	196.6	142.8	167.6	188.9	136.4	161.1	208.4	115.2	152.6	166.2
		67	TC	220.4	219.6	218.8	208.2	207.4	206.6	193.2	192.5	191.7	176.8	176.1	175.2
			SHC	122.6	148.2	173.6	117.6	143.4	168.7	111.6	137.6	162.9	97.2	131.3	156.3
		72	TC	241.2	240.5	240.2	229.8	228.9	228.1	216.3	215.4	214.6	200.2	199.4	198.6
			SHC	95.1	120.9	146.6	90.8	116.8	142.6	85.8	111.9	137.8	80.0	106.2	118.0
		76	TC	–	257.2	256.7	–	246.6	245.9	–	233.0	232.1	–	217.6	216.7
			SHC	–	98.4	124.2	–	94.8	120.7	–	90.2	116.3	–	85.1	111.3
7500 CFM	EAT (wb)	58	TC	187.3	195.3	206.8	174.4	184.9	196.8	161.5	173.5	185.5	148.9	161.1	173.2
			SHC	177.5	195.3	206.8	169.9	184.9	196.8	161.5	173.5	185.5	148.9	161.1	173.2
		62	TC	204.3	203.5	207.1	190.6	189.9	197.1	175.1	175.4	185.7	158.4	161.2	173.5
			SHC	156.5	183.9	207.1	150.7	177.9	197.1	144.1	170.2	185.7	137.1	161.2	173.5
		67	TC	225.2	224.4	223.4	213.1	212.2	211.3	197.8	197.0	196.2	180.8	179.9	179.1
			SHC	127.5	155.8	183.5	122.8	151.2	178.9	116.8	145.5	173.1	110.3	139.0	166.3
		72	TC	246.1	245.5	244.9	234.5	233.6	232.8	220.6	219.7	218.6	204.7	203.7	202.7
			SHC	97.1	125.6	153.8	92.9	121.6	150.1	87.9	116.8	145.3	82.3	111.2	139.9
		76	TC	–	262.3	261.6	–	251.3	250.5	–	237.3	236.3	–	221.6	220.6
			SHC	–	100.9	129.2	–	97.3	125.8	–	92.8	121.5	–	87.7	116.6

LEGEND:

– – Do not operate
Cfm – Cubic feet per minute (supply air)
EAT(db) – Entering air temperature (dry bulb)
EAT(wb) – Entering air temperature (wet bulb)
SHC – Sensible heat capacity
TC – Total capacity

48TC017 (15 TONS) – UNIT WITH HUMIDI–MIZER IN SUBCOOLING MODE										
Temp (F) Air Entering Condenser (Edb)		AIR ENTERING EVAPORATOR – CFM/BF								
		4,500			6,000			7,500		
		Air Entering Evaporator –– Ewb (F)								
		72	67	62	72	67	62	72	67	62
75	TC	208.5	190.6	172.6	229.2	208.6	188.1	247.8	224.9	202.0
	SHC	94.0	114.5	135.0	104.5	125.2	145.9	113.0	133.8	154.6
	kW	13.42	13.05	12.70	13.60	13.21	12.80	13.82	13.36	13.15
85	TC	198.3	180.7	163.0	214.9	194.8	174.6	229.8	207.4	185.1
	SHC	74.1	99.6	125.1	85.2	110.9	136.7	94.1	120.0	145.9
	kW	14.79	14.42	14.10	14.97	14.58	14.20	15.19	14.73	14.51
95	TC	188.2	170.8	153.4	200.6	180.9	161.1	211.9	190.0	168.1
	SHC	54.4	84.8	115.3	65.9	96.7	127.5	75.1	106.2	137.2
	kW	16.23	15.86	15.50	16.41	16.02	15.60	16.63	16.17	15.95
105	TC	178.1	160.9	143.8	186.4	167.0	147.7	193.9	172.5	151.2
	SHC	34.6	70.0	105.4	46.5	82.4	118.2	56.1	92.3	128.5
	kW	17.47	17.10	16.80	17.65	17.26	16.90	17.87	17.41	17.25
115	TC	167.9	151.1	134.2	172.1	153.2	134.2	175.9	155.1	134.5
	SHC	14.8	55.2	95.6	27.2	68.1	109.0	37.1	78.5	119.8
	kW	18.87	18.50	18.20	19.05	18.66	18.30	19.27	18.81	18.55

48TC017 (15 TONS) – UNIT WITH HUMIDI–MIZER IN HOT GAS REHEAT MODE										
Temp (F) Air Entering Condenser (Edb)		AIR ENTERING EVAPORATOR – Ewb (F)								
		75 Dry Bulb			75 Dry Bulb			75 Dry Bulb		
		62.5 Wet Bulb			64 Wet Bulb			65.3 Wet Bulb		
		(50% Relative)			(56% Relative)			(60% Relative)		
		Air Entering Evaporator – Cfm								
		4,500	6,000	7,500	4,500	6,000	7,500	4,500	6,000	7,500
80	TC	80.10	85.50	91.30	82.70	90.90	97.10	86.00	95.40	100.50
	SHC	12.70	22.30	34.20	5.10	12.10	21.20	–2.10	4.20	10.50
	kW	12.44	12.67	12.78	12.55	12.88	13.10	12.65	13.02	13.12
75	TC	82.30	87.60	93.40	84.70	93.00	99.20	88.10	97.30	102.50
	SHC	14.30	24.20	36.00	6.70	13.70	23.10	–0.50	5.80	12.60
	kW	12.38	12.62	12.73	12.50	12.83	13.05	12.62	12.98	13.07
70	TC	84.40	89.60	94.70	87.00	95.10	101.30	90.30	99.50	104.60
	SHC	16.10	25.70	37.30	8.20	15.80	24.50	1.10	7.50	13.70
	kW	12.34	12.58	12.69	12.47	12.78	13.03	12.59	12.93	13.02
60	TC	88.50	93.90	99.80	91.20	99.40	105.50	94.40	103.70	108.90
	SHC	19.40	29.20	40.70	11.50	18.60	27.80	4.60	10.50	16.90
	kW	12.28	12.52	12.63	12.41	12.73	12.97	12.53	12.84	12.94
50	TC	92.80	98.10	104.80	95.40	103.60	110.50	98.80	108.00	113.90
	SHC	22.70	32.20	43.80	14.80	22.10	31.30	7.70	13.90	20.50
	kW	12.21	12.45	12.56	12.34	12.68	12.91	12.46	12.75	12.85
40	TC	97.10	102.50	108.50	99.60	108.00	114.30	103.00	112.40	117.70
	SHC	26.00	35.40	46.90	17.90	25.30	34.40	10.80	17.10	23.80
	kW	12.14	12.38	12.49	12.27	12.60	12.84	12.40	12.70	12.80

LEGEND

Edb – Entering Dry–Bulb
Ewb – Entering Wet–Bulb
kW – Compressor Motor Power Input
ldb – Leaving Dry–Bulb
lwb – Leaving Wet–Bulb
SHC – Sensible Heat Capacity (1000 Btuh) Gross
TC – Total Capacity (1000 Btuh) Gross

NOTES:

1. Direct interpolation is permissible. Do not extrapolate.
2. The following formulas may be used:

$$t_{ldb} = t_{edb} - \frac{\text{sensible capacity (Btuh)}}{1.10 \times \text{cfm}}$$

t_{lwb} = Wet–bulb temperature corresponding to enthalpy of air leaving evaporator coil (h_{lwb})

$$h_{lwb} = h_{ewb} - \frac{\text{total capacity (Btuh)}}{4.5 \times \text{cfm}}$$

Where: h_{ewb} = Enthalpy of air entering evaporator coil

Table 11 – COOLING CAPACITIES **2-Stage Cooling** **17.5 TONS**

48TC*D20				AMBIENT TEMPERATURE											
				85			95			105			115		
				EAT (db)			EAT (db)			EAT (db)			EAT (db)		
				75	80	85	75	80	85	75	80	85	75	80	85
5250 CFM	EAT (wb)	58	TC	180.4	185.6	196.3	167.7	176.1	186.9	154.7	165.3	176.6	142.2	153.6	164.9
			SHC	166.5	185.6	196.3	160.6	176.1	186.9	152.7	165.3	176.6	142.2	153.6	164.9
		62	TC	196.2	195.5	196.9	183.6	182.9	187.2	169.3	168.7	176.9	153.4	154.1	165.2
			SHC	146.8	172.1	194.7	141.4	166.6	187.2	135.4	160.5	176.9	128.6	152.5	165.2
		67	TC	216.7	215.9	215.2	204.9	204.1	203.1	190.6	189.7	189.0	174.8	174.0	173.3
			SHC	120.0	146.1	171.8	115.4	141.5	167.1	109.8	136.1	161.7	103.8	130.2	155.6
		72	TC	237.4	236.8	236.0	226.0	225.1	224.2	212.8	211.9	211.0	197.3	196.4	195.5
			SHC	92.0	118.3	144.3	87.8	114.3	140.4	83.0	109.6	135.8	77.6	104.2	130.6
		76	TC	–	252.9	253.0	–	242.5	241.6	–	229.1	228.2	–	214.1	213.1
			SHC	–	95.1	121.4	–	91.7	118.0	–	87.3	113.8	–	82.5	107.1
6125 CFM	EAT (wb)	58	TC	188.8	198.5	209.3	176.5	188.2	200.2	164.5	176.7	189.0	151.9	164.2	176.7
			SHC	180.4	198.5	209.3	174.4	188.2	200.2	164.5	176.7	189.0	151.9	164.2	176.7
		62	TC	205.2	204.6	209.6	191.8	191.5	200.4	176.6	177.6	189.2	159.9	164.2	176.9
			SHC	159.9	188.7	209.6	154.2	183.0	200.4	147.9	174.8	189.2	141.0	164.2	176.9
		67	TC	225.5	224.5	223.5	213.5	212.5	211.7	199.1	198.3	197.4	182.3	181.4	180.9
			SHC	128.3	158.4	187.8	123.8	154.1	183.5	118.4	148.9	178.1	112.2	142.7	171.6
		72	TC	245.6	245.3	244.6	234.7	233.6	232.6	220.9	219.9	218.8	205.5	204.4	203.4
			SHC	95.4	125.9	155.7	91.7	122.2	152.4	86.9	117.7	148.1	81.7	112.5	143.1
		76	TC	–	262.0	261.2	–	250.7	250.1	–	237.3	236.2	–	221.6	220.6
			SHC	–	99.5	129.4	–	95.9	126.2	–	91.8	122.4	–	87.0	117.8
7000 CFM	EAT (wb)	58	TC	197.4	209.8	221.3	186.1	199.1	211.7	173.8	186.9	200.1	160.3	173.5	186.9
			SHC	196.8	209.8	221.3	186.1	199.1	211.7	173.8	186.9	200.1	160.3	173.5	186.9
		62	TC	212.7	212.4	221.5	198.4	199.8	212.0	182.3	186.9	200.3	164.7	173.8	187.1
			SHC	173.4	205.1	221.5	167.4	197.4	212.0	160.8	186.8	200.3	153.4	173.8	187.1
		67	TC	233.7	232.5	231.4	220.8	219.8	218.9	205.6	204.5	204.1	187.8	186.8	188.0
			SHC	138.0	172.0	205.0	133.4	167.6	200.4	127.8	162.0	194.4	121.3	155.6	185.6
		72	TC	254.3	253.3	252.8	242.7	241.5	240.3	228.0	226.8	225.7	211.8	210.6	209.3
			SHC	101.3	135.4	169.2	97.3	131.8	165.9	92.3	127.2	161.5	86.9	121.8	156.3
		76	TC	–	270.7	269.9	–	259.0	258.1	–	245.0	243.6	–	228.5	227.1
			SHC	–	106.1	140.0	–	102.4	136.5	–	98.2	132.7	–	93.2	127.9
7875 CFM	EAT (wb)	58	TC	205.0	217.2	229.1	193.4	206.9	219.3	180.6	194.3	207.9	166.6	180.5	194.5
			SHC	205.0	217.2	229.1	193.4	206.9	219.3	180.6	194.3	207.9	166.6	180.5	194.5
		62	TC	216.7	217.4	229.4	202.5	207.1	219.6	185.9	194.5	208.4	168.4	180.7	194.7
			SHC	183.9	217.4	229.4	178.2	207.1	219.6	171.5	194.5	208.4	141.2	180.7	194.7
		67	TC	237.8	236.7	235.7	224.7	223.5	223.0	209.5	208.3	209.2	191.5	190.3	195.0
			SHC	144.6	182.4	219.3	140.3	178.2	213.7	134.9	172.7	205.9	113.6	166.2	195.0
		72	TC	258.6	257.5	256.5	246.8	245.7	244.3	231.8	230.5	229.2	215.3	213.9	212.5
			SHC	103.9	141.8	179.2	100.0	138.3	176.1	95.1	133.9	172.1	89.7	128.6	142.0
		76	TC	–	275.4	274.2	–	262.7	261.8	–	248.7	247.6	–	231.9	230.5
			SHC	–	109.5	147.0	–	105.7	143.6	–	101.5	139.9	–	96.6	135.4
8750 CFM	EAT (wb)	58	TC	211.3	223.6	235.9	199.7	213.4	225.7	186.4	200.7	214.3	172.1	186.5	200.9
			SHC	211.3	223.6	235.9	199.7	213.4	225.7	186.4	200.7	214.3	172.1	186.5	200.9
		62	TC	220.0	223.7	236.3	206.0	213.6	226.1	189.3	200.9	214.5	172.2	186.7	201.2
			SHC	194.0	223.7	236.3	188.5	213.6	226.1	181.3	200.9	214.5	172.2	186.7	201.2
		67	TC	241.1	240.1	239.7	227.9	226.6	226.9	212.7	211.4	214.9	194.4	193.0	201.4
			SHC	151.0	192.1	230.2	146.9	188.3	225.2	141.6	182.9	214.8	135.3	176.3	201.4
		72	TC	262.2	261.0	259.7	250.0	248.8	247.7	235.0	233.5	232.1	218.1	216.6	215.2
			SHC	106.5	148.1	189.0	102.5	144.5	186.0	97.8	140.4	182.1	92.4	135.3	177.1
		76	TC	–	278.9	277.4	–	266.0	264.8	–	251.5	250.6	–	234.7	233.0
			SHC	–	112.7	153.7	–	108.9	150.4	–	104.7	146.7	–	100.0	142.4

LEGEND:

– – Do not operate
Cfm – Cubic feet per minute (supply air)
EAT(db) – Entering air temperature (dry bulb)
EAT(wb) – Entering air temperature (wet bulb)
SHC – Sensible heat capacity
TC – Total capacity

48TC020 (17.5 TONS) – UNIT WITH HUMIDI–MIZER IN SUBCOOLING MODE										
Temp (F) Air Entering Condenser (Edb)		AIR ENTERING EVAPORATOR – CFM/BF								
		5,250			7,000			8,750		
		Air Entering Evaporator –– Ewb (F)								
		72	67	62	72	67	62	72	67	62
75	TC	218.7	199.6	180.5	241.4	219.4	197.4	261.7	237.2	212.7
	SHC	99.9	123.9	147.8	112.7	136.9	161.1	122.9	147.3	171.7
	kW	11.81	11.56	11.20	13.81	13.48	13.16	14.82	14.58	14.16
85	TC	206.6	187.9	169.1	224.9	203.4	181.9	241.3	217.3	193.4
	SHC	78.9	108.4	137.9	92.2	122.1	152.0	103.0	133.1	163.3
	kW	13.18	12.53	12.53	15.18	14.85	14.52	16.21	15.85	15.54
95	TC	194.7	176.2	157.8	208.4	187.4	166.4	220.8	197.4	174.1
	SHC	57.8	92.9	128.0	71.7	107.3	142.9	83.0	118.9	154.9
	kW	14.56	14.21	13.88	16.56	16.21	15.87	17.56	17.22	16.01
105	TC	182.7	164.5	146.4	191.9	171.4	150.8	200.3	177.6	154.8
	SHC	36.8	77.4	118.1	51.3	92.5	133.8	63.0	104.7	146.4
	kW	15.93	15.58	15.20	17.94	17.58	17.22	18.95	18.59	18.24
115	TC	170.6	152.8	135.0	175.4	155.4	135.3	179.8	157.7	135.5
	SHC	15.7	62.0	108.2	30.8	77.8	124.7	43.0	90.5	128.0
	kW	17.31	16.95	16.58	19.32	18.95	18.58	20.32	19.96	19.59

48TC020 (17.5 TONS) – UNIT WITH HUMIDI–MIZER IN HOT GAS REHEAT MODE										
Temp (F) Air Entering Condenser (Edb)		AIR ENTERING EVAPORATOR – Ewb (F)								
		75 Dry Bulb			75 Dry Bulb			75 Dry Bulb		
		62.5 Wet Bulb			64 Wet Bulb			65.3 Wet Bulb		
		(50% Relative)			(56% Relative)			(60% Relative)		
		Air Entering Evaporator – Cfm								
		5,250	7,000	8,750	5,250	7,000	8,750	5,250	7,000	8,750
80	TC	82.20	90.50	92.40	86.70	96.40	97.80	91.60	99.80	101.20
	SHC	18.20	29.40	41.60	8.60	17.20	27.50	0.50	9.30	13.20
	kW	12.64	12.73	12.88	12.78	13.06	13.15	12.96	13.07	13.22
75	TC	84.40	92.70	94.40	88.80	98.60	99.70	93.70	102.00	103.40
	SHC	19.70	31.30	43.50	10.10	18.80	29.20	12.10	10.80	15.30
	kW	12.60	12.71	12.85	12.75	13.02	13.12	12.93	13.03	13.19
70	TC	86.70	94.90	96.60	91.00	100.70	102.00	95.90	104.10	105.40
	SHC	21.30	32.80	44.80	11.60	20.40	30.70	3.80	12.30	16.50
	kW	12.56	12.66	12.82	12.70	12.99	13.08	12.89	13.00	13.14
60	TC	90.90	99.10	100.80	95.20	105.00	106.30	100.20	108.30	109.70
	SHC	24.80	36.00	48.20	14.90	23.90	35.90	7.20	15.60	19.60
	kW	12.49	12.60	12.75	12.64	12.92	13.02	12.83	12.93	13.09
50	TC	95.00	103.40	105.10	99.50	109.40	110.50	104.40	112.50	113.90
	SHC	28.10	39.30	51.30	18.20	27.20	37.40	10.30	18.90	23.20
	kW	12.43	12.53	12.67	12.57	12.86	12.95	12.76	12.87	13.02
40	TC	99.20	107.70	109.30	103.70	113.70	114.70	108.60	116.70	118.10
	SHC	31.40	42.50	54.40	21.30	30.40	40.50	13.40	22.00	26.50
	kW	12.35	12.45	12.61	12.50	12.79	12.87	12.68	12.80	12.94

LEGEND

Edb – Entering Dry–Bulb
Ewb – Entering Wet–Bulb
kW – Compressor Motor Power Input
ldb – Leaving Dry–Bulb
lwb – Leaving Wet–Bulb
SHC – Sensible Heat Capacity (1000 Btuh) Gross
TC – Total Capacity (1000 Btuh) Gross

NOTES:

1. Direct interpolation is permissible. Do not extrapolate.
2. The following formulas may be used:

$$t_{ldb} = t_{edb} - \frac{\text{sensible capacity (Btuh)}}{1.10 \times \text{cfm}}$$

t_{lwb} = Wet–bulb temperature corresponding to enthalpy of air leaving evaporator coil (h_{lwb})

$$h_{lwb} = h_{ewb} - \frac{\text{total capacity (Btuh)}}{4.5 \times \text{cfm}}$$

Where: h_{ewb} = Enthalpy of air entering evaporator coil

Table 13 – COOLING CAPACITIES 2-Stage Cooling 20 TONS

48TC*D24				AMBIENT TEMPERATURE											
				85			95			105			115		
				EA (db)			EA (db)			EA (db)			EA (db)		
				75	80	85	75	80	85	75	80	85	75	80	85
6000 CFM	EAT (wb)	58	TC	213.1	217.2	228.7	199.9	207.5	219.4	184.8	195.8	208.4	169.6	182.6	195.6
			SHC	194.3	217.2	228.7	188.0	207.5	219.4	179.0	195.8	208.4	169.6	182.6	195.6
		62	TC	230.0	229.4	230.4	217.5	217.0	219.7	202.5	201.9	208.8	184.9	184.9	195.9
			SHC	170.0	199.9	225.9	164.6	194.5	219.7	158.3	187.8	208.8	150.9	178.7	195.9
		67	TC	251.5	251.1	250.6	239.4	238.7	238.1	225.4	224.7	224.0	208.8	208.2	207.4
			SHC	137.5	168.1	198.4	132.9	163.4	193.7	127.5	158.1	188.2	121.1	151.9	181.9
		72	TC	274.0	273.8	273.5	262.3	261.7	261.0	248.2	247.4	246.6	232.2	231.3	230.5
			SHC	104.3	135.1	165.6	100.1	130.9	161.4	95.1	125.9	156.6	89.6	120.5	151.3
		76	TC	–	292.9	292.2	–	280.5	279.9	–	266.3	265.6	–	250.6	249.8
			SHC	–	108.1	138.6	–	104.1	134.9	–	99.6	130.4	–	94.6	125.5
7000 CFM	EAT (wb)	58	TC	220.8	229.7	241.7	208.4	219.7	232.2	194.3	208.1	221.0	180.1	194.2	207.9
			SHC	211.0	229.7	241.7	203.1	219.7	232.2	194.3	208.1	221.0	180.1	194.2	207.9
		62	TC	237.8	237.3	241.9	225.1	224.6	232.3	209.6	210.2	221.3	191.3	196.0	208.2
			SHC	183.3	217.8	241.9	178.2	212.1	232.3	171.8	203.8	221.3	164.3	196.0	208.2
		67	TC	260.0	259.2	258.5	247.2	246.4	245.7	232.7	231.9	231.7	215.8	215.0	214.3
			SHC	146.0	181.0	215.7	141.3	176.5	211.2	136.0	171.3	206.3	129.8	165.3	199.4
		72	TC	283.3	282.5	281.8	270.6	269.8	268.9	255.9	255.0	254.1	240.0	238.9	238.0
			SHC	107.9	143.2	178.1	103.6	139.0	174.1	98.6	134.2	169.5	93.2	129.0	164.4
		76	TC	–	302.3	301.6	–	289.1	288.4	–	274.4	273.6	–	257.9	256.8
			SHC	–	112.3	147.5	–	108.3	143.7	–	103.9	139.4	–	98.9	134.5
8000 CFM	EAT (wb)	58	TC	232.1	243.6	256.1	219.8	233.4	246.0	206.9	221.3	234.5	192.1	206.8	221.2
			SHC	227.5	243.6	256.1	219.8	233.4	246.0	206.9	221.3	234.5	192.1	206.8	221.2
		62	TC	247.8	247.1	256.4	234.7	235.5	246.2	218.7	221.1	234.7	199.5	207.0	221.4
			SHC	199.5	236.7	256.4	194.3	229.1	246.2	187.8	221.1	234.7	179.9	207.0	221.4
		67	TC	270.2	269.3	268.3	257.0	256.1	255.2	242.1	241.0	240.3	224.5	223.5	223.1
			SHC	157.6	197.1	235.6	152.7	192.6	231.0	147.3	187.2	225.3	141.0	181.0	215.6
		72	TC	294.1	293.1	292.2	280.7	279.7	278.4	265.9	264.7	263.8	248.9	247.6	246.6
			SHC	114.8	154.6	193.9	110.3	150.4	190.0	105.4	145.6	185.5	99.7	140.1	180.2
		76	TC	–	313.1	312.3	–	299.3	298.2	–	283.8	282.8	–	266.7	265.4
			SHC	–	120.2	159.6	–	116.0	155.9	–	111.4	151.5	–	106.2	146.6
9000 CFM	EAT (wb)	58	TC	238.5	252.5	266.0	226.8	241.6	255.6	213.1	228.2	243.0	197.5	213.0	229.2
			SHC	238.5	252.5	266.0	226.8	241.6	255.6	213.1	228.2	243.0	197.5	213.0	229.2
		62	TC	253.0	254.1	266.3	238.6	241.6	255.7	221.0	228.4	243.3	201.1	213.2	229.4
			SHC	211.9	249.1	266.3	206.2	241.6	255.7	199.2	228.4	243.3	164.2	213.2	229.4
		67	TC	276.9	275.8	274.8	263.0	261.8	261.0	246.5	245.2	246.6	228.2	225.9	229.6
			SHC	165.6	209.9	252.2	160.7	205.1	247.0	154.9	199.3	238.5	132.3	192.7	229.6
		72	TC	302.2	301.0	299.7	287.9	286.6	285.4	272.3	270.9	269.6	254.3	252.9	251.6
			SHC	118.2	162.8	206.8	113.5	158.4	202.9	108.5	153.4	198.0	102.7	147.8	165.1
		76	TC	–	322.0	320.8	–	307.7	306.1	–	291.4	289.9	–	275.1	272.5
			SHC	–	124.5	168.7	–	120.4	164.9	–	115.6	160.5	–	110.9	155.3
10,000 CFM	EAT (wb)	58	TC	245.7	259.8	273.9	233.8	248.7	263.2	219.8	235.3	250.5	203.7	219.8	236.5
			SHC	245.7	259.8	273.9	233.8	248.7	263.2	219.8	235.3	250.5	203.7	219.8	236.5
		62	TC	256.8	260.7	274.2	242.2	249.0	263.3	224.6	235.6	250.6	205.6	220.0	236.8
			SHC	223.8	258.4	274.2	218.1	249.0	263.3	211.0	235.6	250.6	199.3	220.0	236.8
		67	TC	280.8	279.6	266.3	266.6	265.4	265.8	249.9	248.6	251.0	231.4	229.8	237.3
			SHC	173.2	221.8	266.3	168.3	217.0	258.7	162.6	211.4	250.7	156.4	204.7	237.3
		72	TC	306.4	305.0	274.8	292.1	290.6	289.3	276.0	274.3	273.0	257.5	256.0	254.6
			SHC	121.2	170.1	252.2	116.6	165.9	214.8	111.5	161.0	210.0	105.7	155.4	204.5
		76	TC	–	326.2	299.7	–	311.4	310.0	–	295.2	293.2	–	277.0	275.3
			SHC	–	128.2	206.8	–	124.0	172.9	–	119.5	168.9	–	114.3	163.8

LEGEND:

– – Do not operate
Cfm – Cubic feet per minute (supply air)
EAT(db) – Entering air temperature (dry bulb)
EAT(wb) – Entering air temperature (wet bulb)
SHC – Sensible heat capacity
TC – Total capacity

48TC024 (20 TONS) – UNIT WITH HUMIDI–MIZER IN SUBCOOLING MODE										
Temp (F) Air Entering Condenser (Edb)		AIR ENTERING EVAPORATOR – CFM/BF								
		6,000			8,000			10,000		
		Air Entering Evaporator –– Ewb (F)								
		72	67	62	72	67	62	72	67	62
75	TC	263.0	240.4	217.7	301.0	274.0	246.9	336.9	305.6	274.4
	SHC	125.3	151.6	178.0	144.4	171.1	198.0	160.0	186.9	213.9
	kW	15.63	15.20	14.65	15.91	15.62	14.98	16.26	15.92	15.21
85	TC	248.2	226.1	204.0	279.2	252.9	226.6	308.4	278.2	248.0
	SHC	98.9	131.7	164.5	118.6	152.0	185.3	134.6	168.4	202.2
	kW	17.50	17.04	16.50	17.74	17.51	16.75	18.08	17.73	17.03
95	TC	233.4	211.8	190.2	257.3	231.8	206.4	279.8	250.7	221.5
	SHC	72.4	111.8	151.1	92.7	132.8	172.9	109.3	149.9	190.6
	kW	19.36	18.96	18.35	19.61	19.37	18.67	20.02	19.62	18.97
105	TC	218.6	197.5	176.5	235.4	210.7	186.1	251.3	223.2	195.1
	SHC	46.0	91.8	137.7	66.9	113.6	160.4	83.9	131.4	178.9
	kW	21.23	20.76	20.18	21.53	21.22	20.52	21.91	21.52	20.77
115	TC	203.7	183.3	162.8	213.5	189.7	165.8	222.7	195.7	168.7
	SHC	19.5	71.9	124.2	41.0	94.4	147.9	58.5	112.9	157.2
	kW	23.02	22.58	22.02	23.42	23.02	22.38	23.73	23.41	22.57

48TC024 (20 TONS) – UNIT WITH HUMIDI–MIZER IN HOT GAS REHEAT MODE										
Temp (F) Air Entering Condenser (Edb)		AIR ENTERING EVAPORATOR – Ewb (F)								
		75 Dry Bulb			75 Dry Bulb			75 Dry Bulb		
		62.5 Wet Bulb			64 Wet Bulb			65.3 Wet Bulb		
		(50% Relative)			(56% Relative)			(60% Relative)		
		Air Entering Evaporator – Cfm								
		6,000	8,000	10,000	6,000	8,000	10,000	6,000	8,000	10,000
80	TC	91.50	100.80	109.50	95.80	105.70	112.40	102.30	110.80	118.60
	SHC	12.30	31.20	44.50	0.90	15.10	25.70	–6.50	3.60	13.90
	kW	14.82	15.01	15.24	15.35	15.45	15.52	15.56	15.65	15.73
75	TC	94.00	103.40	112.00	98.70	108.10	115.10	104.70	113.10	121.10
	SHC	13.60	32.40	45.70	2.00	16.00	26.60	–5.60	4.70	15.10
	kW	14.90	15.07	15.33	15.43	15.56	15.64	15.69	15.77	15.85
70	TC	96.50	106.00	114.30	100.90	110.60	117.20	107.20	115.80	123.50
	SHC	14.50	33.20	45.70	3.30	17.30	28.00	–4.00	5.90	16.20
	kW	14.97	15.17	15.41	15.50	15.66	15.75	15.80	15.87	15.94
60	TC	101.80	111.30	119.30	106.20	115.60	122.20	112.60	119.40	128.00
	SHC	16.70	35.50	48.60	5.60	19.40	30.30	–1.80	8.20	18.50
	kW	15.14	15.32	15.58	15.66	15.88	15.97	16.05	16.10	16.19
50	TC	107.20	116.40	124.30	111.50	120.70	127.30	117.70	125.20	132.90
	SHC	18.60	37.60	50.70	8.00	22.00	32.70	0.50	10.50	21.00
	kW	15.27	15.46	15.76	15.81	16.10	16.23	16.27	16.34	16.41
40	TC	112.20	121.80	129.20	116.60	125.70	132.00	123.20	130.00	138.00
	SHC	21.80	39.50	52.90	10.20	24.40	35.20	2.90	13.00	23.40
	kW	15.42	15.63	15.93	15.96	16.32	16.44	16.52	16.57	16.65

LEGEND

Edb – Entering Dry–Bulb
Ewb – Entering Wet–Bulb
kW – Compressor Motor Power Input
ldb – Leaving Dry–Bulb
lwb – Leaving Wet–Bulb
SHC – Sensible Heat Capacity (1000 Btuh) Gross
TC – Total Capacity (1000 Btuh) Gross

NOTES:

1. Direct interpolation is permissible. Do not extrapolate.
2. The following formulas may be used:

$$t_{ldb} = t_{edb} - \frac{\text{sensible capacity (Btuh)}}{1.10 \times \text{cfm}}$$

t_{lwb} = Wet–bulb temperature corresponding to enthalpy of air leaving evaporator coil (h_{lwb})

$$h_{lwb} = h_{ewb} - \frac{\text{total capacity (Btuh)}}{4.5 \times \text{cfm}}$$

Where: h_{ewb} = Enthalpy of air entering evaporator coil

Table 15 – COOLING CAPACITIES **2-Stage Cooling** **25 TONS**

48TC*D28				AMBIENT TEMPERATURE											
				85			95			105			115		
				EA (db)			EA (db)			EA (db)			EA (db)		
				75	80	85	75	80	85	75	80	85	75	80	85
7,500 CFM	EAT (wb)	58	TC	257.3	266.5	279.6	247.5	255.4	269.0	231.5	243.3	257.2	214.3	229.2	243.7
			SHC	247.5	266.5	279.6	231.1	255.4	269.0	223.5	243.3	257.2	213.2	229.2	243.7
		62	TC	281.4	280.5	280.6	267.5	267.0	269.3	251.3	251.0	257.6	232.7	232.5	244.1
			SHC	208.2	244.0	278.0	202.3	238.4	269.3	195.8	231.5	257.6	188.1	223.4	244.1
		67	TC	307.4	306.4	305.7	293.0	292.2	291.4	276.9	276.2	275.4	259.7	259.2	258.8
			SHC	168.7	205.7	242.3	163.2	200.3	236.9	157.1	194.4	230.7	150.6	188.4	224.8
		72	TC	333.9	333.2	332.5	320.1	319.3	318.6	304.5	303.7	302.7	287.2	285.3	284.5
			SHC	128.1	165.4	202.3	123.1	160.6	197.8	117.6	155.1	192.5	111.5	149.0	186.6
		76	TC	–	356.0	355.2	–	342.0	341.2	–	326.0	325.2	–	308.0	307.4
			SHC	–	132.7	169.9	–	128.1	165.6	–	123.0	160.7	–	117.3	154.5
8,750 CFM	EAT (wb)	58	TC	269.8	280.2	294.4	255.3	268.9	283.2	241.1	256.1	270.7	225.5	241.3	257.3
			SHC	257.9	280.2	294.4	250.4	268.9	283.2	241.1	256.1	270.7	225.5	241.3	257.3
		62	TC	289.9	289.3	294.6	275.3	274.9	283.6	258.7	258.2	271.0	238.8	241.6	257.6
			SHC	224.2	265.0	294.6	218.6	258.6	283.6	212.0	251.7	271.0	203.9	241.6	257.6
		67	TC	316.2	315.7	314.5	301.7	300.8	299.8	285.1	284.2	283.4	266.7	266.0	265.2
			SHC	179.0	221.6	263.1	173.5	216.4	257.9	167.5	210.5	251.9	161.0	204.5	245.1
		72	TC	343.7	342.7	341.6	315.3	327.9	327.0	313.1	311.4	310.4	294.3	293.2	292.2
			SHC	132.4	175.4	217.7	127.6	170.7	213.3	122.0	165.3	208.3	115.6	159.2	202.5
		76	TC	–	366.0	364.9	–	351.2	350.1	–	334.2	333.2	–	315.4	314.3
			SHC	–	138.0	180.7	–	133.4	176.5	–	128.2	171.6	–	122.5	166.1
10,000 CFM	EAT (wb)	58	TC	277.1	291.8	306.8	264.9	280.2	295.3	251.2	267.0	282.3	235.1	252.2	268.1
			SHC	275.3	291.8	306.8	264.9	280.2	295.3	251.2	267.0	282.3	235.1	252.2	268.1
		62	TC	296.8	296.0	307.2	281.8	281.8	295.6	264.7	267.1	282.6	244.9	252.4	268.4
			SHC	239.8	283.9	307.2	234.0	276.8	295.6	227.5	267.1	282.6	219.4	252.4	268.4
		67	TC	323.5	322.6	321.4	308.5	307.4	306.5	291.3	290.2	289.3	272.5	271.5	270.8
			SHC	188.8	236.9	282.9	183.5	231.9	277.4	177.5	226.1	271.2	171.2	219.7	264.3
		72	TC	351.8	350.5	349.2	336.6	335.4	334.1	319.7	318.3	317.1	300.2	298.9	297.8
			SHC	136.6	185.1	232.8	131.6	180.4	228.6	126.0	175.1	223.7	119.7	169.1	217.9
		76	TC	–	374.2	372.8	–	358.6	357.3	–	340.9	339.7	–	321.3	320.1
			SHC	–	143.1	191.2	–	138.5	187.1	–	133.3	182.3	–	127.6	176.8
11,250 CFM	EAT (wb)	58	TC	285.8	301.5	317.0	273.8	289.0	305.1	259.8	276.1	291.7	244.0	260.9	277.4
			SHC	285.8	301.5	317.0	273.8	289.0	305.1	259.8	276.1	291.7	244.0	260.9	277.4
		62	TC	302.2	302.3	317.4	286.3	289.5	305.4	269.6	276.4	208.4	249.3	261.1	277.6
			SHC	254.3	300.2	317.4	245.8	289.5	305.4	242.1	276.4	208.4	201.5	261.1	277.6
		67	TC	328.7	327.7	326.7	313.5	312.2	311.1	296.0	294.8	294.3	277.5	275.7	277.9
			SHC	197.9	251.1	301.0	192.8	246.4	295.4	187.0	240.4	288.0	160.9	234.6	277.9
		72	TC	357.4	355.9	354.4	341.8	340.3	339.0	324.4	322.8	321.6	304.8	303.2	302.0
			SHC	140.2	193.9	246.7	135.2	189.4	242.8	129.7	184.3	238.2	123.5	178.4	198.1
		76	TC	–	379.7	378.2	–	363.9	362.3	–	345.7	344.2	–	327.5	324.0
			SHC	–	147.6	200.8	–	143.1	196.9	–	138.0	192.3	–	132.9	187.1
12,500 CFM	EAT (wb)	58	TC	293.7	309.8	325.6	280.3	297.3	313.5	267.0	283.5	299.8	250.8	268.3	284.8
			SHC	293.7	309.8	325.6	280.3	297.3	313.5	267.0	283.5	299.8	250.8	268.3	284.8
		62	TC	310.5	310.2	326.1	290.7	297.6	313.9	273.7	283.7	300.1	253.1	268.5	285.0
			SHC	264.9	310.1	326.1	262.1	297.6	313.9	255.7	283.7	300.1	246.9	268.5	285.0
		67	TC	333.1	331.7	330.9	317.5	316.2	315.9	299.8	298.7	300.3	280.7	279.6	285.5
			SHC	206.6	264.7	317.6	201.9	260.2	311.0	196.2	254.9	300.3	190.0	248.1	285.5
		72	TC	362.1	360.3	358.7	346.0	344.3	343.0	328.2	326.6	325.1	308.4	306.6	305.3
			SHC	143.6	202.4	260.2	138.7	198.1	256.5	133.2	193.2	252.1	127.1	187.5	246.5
		76	TC	–	384.3	382.5	–	368.1	366.3	–	349.5	347.8	–	331.0	328.7
			SHC	–	151.9	210.1	–	147.5	206.4	–	142.5	201.9	–	137.4	195.2

LEGEND:

– – Do not operate
Cfm – Cubic feet per minute (supply air)
EAT(db) – Entering air temperature (dry bulb)
EAT(wb) – Entering air temperature (wet bulb)
SHC – Sensible heat capacity
TC – Total capacity

48TC028 (25 TONS) – UNIT WITH HUMIDI–MIZER IN SUBCOOLING MODE										
Temp (F) Air Entering Condenser (Edb)		AIR ENTERING EVAPORATOR – CFM/BF								
		7,500			10,000			12,500		
		Air Entering Evaporator –– Ewb (F)								
		72	67	62	72	67	62	72	67	62
75	TC	335.3	305.5	275.8	368.3	334.4	300.5	398.1	360.5	322.9
	SHC	149.6	181.7	213.7	172.8	205.5	238.2	191.7	224.9	258.2
	kW	19.50	18.70	17.70	19.50	18.70	17.70	19.70	18.80	17.90
85	TC	316.3	287.0	257.7	341.5	308.4	275.3	364.3	327.8	291.2
	SHC	120.8	160.5	200.2	144.6	185.2	225.8	164.0	205.4	246.7
	kW	21.90	21.30	20.10	22.30	21.30	20.30	22.50	21.70	20.60
95	TC	297.3	268.5	239.6	314.7	282.4	250.1	330.5	295.0	259.5
	SHC	92.1	139.4	186.7	116.4	164.9	213.5	136.3	185.8	235.3
	kW	24.30	23.50	22.50	24.40	23.50	22.60	24.40	23.60	22.50
105	TC	278.2	249.9	221.6	287.9	256.4	224.9	296.7	262.3	227.8
	SHC	63.3	118.2	173.2	88.3	144.7	201.1	108.7	166.3	223.9
	kW	26.70	26.00	25.00	27.30	26.00	25.00	27.30	26.10	25.10
115	TC	259.2	231.4	203.5	261.1	230.4	199.7	262.9	229.5	196.1
	SHC	34.5	97.1	159.7	60.1	124.4	188.7	81.0	146.7	191.2
	kW	28.70	28.00	27.10	29.30	28.10	26.90	29.10	27.90	27.20

48TC

48TC028 (25 TONS) – UNIT WITH HUMIDI–MIZER IN HOT GAS REHEAT MODE										
Temp (F) Air Entering Condenser (Edb)		AIR ENTERING EVAPORATOR – Ewb (F)								
		75 Dry Bulb			75 Dry Bulb			75 Dry Bulb		
		62.5 Wet Bulb			64 Wet Bulb			65.3 Wet Bulb		
		(50% Relative)			(56% Relative)			(60% Relative)		
		Air Entering Evaporator – Cfm								
		7,500	10,000	12,500	7,500	10,000	12,500	7,500	10,000	12,500
80	TC	132.40	136.80	148.40	138.20	142.40	154.60	144.30	146.40	162.50
	SHC	37.80	61.50	85.50	21.80	44.40	52.40	16.10	32.10	48.90
	kW	17.90	18.15	18.21	18.05	18.33	18.43	18.26	18.55	18.62
75	TC	138.00	142.20	154.10	143.50	148.00	160.30	148.90	151.00	167.10
	SHC	44.20	68.00	91.80	28.10	51.50	58.80	22.70	38.20	56.00
	kW	17.77	18.00	18.07	17.92	18.19	18.29	18.14	18.40	18.48
70	TC	143.80	148.10	160.00	149.30	154.00	165.90	155.50	157.60	173.80
	SHC	50.50	73.80	98.10	34.20	56.50	65.30	28.30	44.00	62.30
	kW	17.63	17.86	17.93	17.78	18.04	18.14	18.03	18.26	18.34
60	TC	154.80	159.50	171.10	160.20	165.20	177.20	166.70	168.80	185.10
	SHC	63.10	84.50	110.10	46.50	69.50	75.70	41.40	56.50	74.30
	kW	17.35	17.58	17.65	17.50	17.76	17.85	17.70	17.97	18.04
50	TC	166.30	170.50	181.20	171.30	176.40	188.40	178.00	180.00	196.40
	SHC	75.80	96.50	122.20	58.30	79.80	87.80	53.70	69.10	85.90
	kW	17.06	17.30	17.37	17.22	17.46	17.56	17.42	17.69	17.76
40	TC	177.50	181.70	192.30	182.40	187.60	199.70	189.30	191.20	207.70
	SHC	85.70	109.80	134.30	71.50	92.30	100.50	66.10	79.50	97.90
	kW	16.76	17.01	17.09	16.93	17.18	17.28	17.14	17.41	17.47

LEGEND

Edb – Entering Dry–Bulb
Ewb – Entering Wet–Bulb
kW – Compressor Motor Power Input
ldb – Leaving Dry–Bulb
lwb – Leaving Wet–Bulb
SHC – Sensible Heat Capacity (1000 Btuh) Gross
TC – Total Capacity (1000 Btuh) Gross

NOTES:

1. Direct interpolation is permissible. Do not extrapolate.
2. The following formulas may be used:

$$t_{ldb} = t_{edb} - \frac{\text{sensible capacity (Btuh)}}{1.10 \times \text{cfm}}$$

t_{lwb} = Wet–bulb temperature corresponding to enthalpy of air leaving evaporator coil (h_{lwb})

$$h_{lwb} = h_{ewb} - \frac{\text{total capacity (Btuh)}}{4.5 \times \text{cfm}}$$

Where: h_{ewb} = Enthalpy of air entering evaporator coil

Table 17 – COOLING CAPACITIES 2-Stage Cooling 27.5 TONS

48TC*D30				Ambient Temperature														
				85			95			105			115			125		
				EA (dB)			EA (dB)			EA (dB)			EA (dB)			EA (dB)		
				75	80	85	75	80	85	75	80	85	75	80	85	75	80	85
7,500 CFM	EAT (wb)	58	THC	298	298	336.8	285.3	285.3	322.4	270.1	270.1	305.3	253.5	253.5	286.5	235	235	265.5
			SHC	259.2	298	336.8	248.2	285.3	322.4	235	270.1	305.3	220.5	253.5	286.5	204.4	235	265.5
		62	THC	318.3	318.3	318.3	301.9	301.9	309	282.4	282.4	299.5	260.5	260.5	288.5	237.1	237.1	273.1
			SHC	233.5	275.2	316.9	225.8	267.4	309	216.6	258.1	299.5	206.1	247.3	288.5	193	233.1	273.1
		67	THC	352.3	352.3	352.3	335.9	335.9	335.9	317.1	317.1	317.1	294	294	294	268.9	268.9	268.9
			SHC	193.3	235	276.8	186.4	228.3	270.1	178.7	220.5	262.4	169.3	211.1	252.9	159.3	201.1	242.9
		72	THC	383.6	383.6	383.6	368.5	368.5	368.5	350.7	350.7	350.7	329.6	329.6	329.6	304.6	304.6	304.6
			SHC	149.7	191.9	234.2	144	186.2	228.4	137.3	179.5	221.7	129.6	171.7	213.8	120.6	162.5	204.5
		76	THC	–	404	404	–	390.3	390.3	–	373.1	373.1	–	353.4	353.4	–	349.5	349.5
			SHC	–	154.8	200.2	–	150.2	195.6	–	144.5	189.9	–	138	183.2	–	135.9	181.3
8,750 CFM	EAT (wb)	58	THC	315.7	315.7	356.8	302.4	302.4	341.8	286.8	286.8	324.1	269.2	269.2	304.3	250.1	250.1	282.6
			SHC	274.6	315.7	356.8	263	302.4	341.8	249.4	286.8	324.1	234.2	269.2	304.3	217.5	250.1	282.6
		62	THC	329.7	329.7	346.7	312.7	312.7	338.3	293	293	328	271.1	271.1	314.6	250.4	250.4	293.8
			SHC	251.3	299	346.7	243.3	290.8	338.3	233.7	280.9	328	222	268.3	314.6	206.9	250.4	293.8
		67	THC	363.1	363.1	363.1	346.4	346.4	346.4	327.1	327.1	327.1	303.7	303.7	303.7	277.4	277.4	277.4
			SHC	204.4	252.2	299.9	197.8	245.7	293.6	190.2	238.3	286.3	181	229.1	277.2	170.9	219	267
		72	THC	392.4	392.4	392.4	377.4	377.4	377.4	359.5	359.5	359.5	338.6	338.6	338.6	313.2	313.2	313.2
			SHC	153.8	201.6	249.3	148.4	196.3	244.3	141.9	190	238	134.5	182.7	230.8	119	167.2	215.4
		76	THC	–	410.9	410.9	–	397.4	397.4	–	380	380	–	359.9	359.9	–	350.6	350.6
			SHC	–	160.7	213.6	–	156.2	208.9	–	150.1	201.8	–	143.2	194.1	–	139	189.7
10,000 CFM	EAT (wb)	58	THC	330.4	330.4	373.4	316.6	316.6	357.8	300.7	300.7	339.9	282.3	282.3	319	262.3	262.3	296.4
			SHC	287.4	330.4	373.4	275.4	316.6	357.8	261.6	300.7	339.9	245.6	282.3	319	228.2	262.3	296.4
		62	THC	338.9	338.9	373.5	321.8	321.8	364.5	301.9	301.9	354.3	282.6	282.6	331.6	262.6	262.6	308.2
			SHC	267.2	320.3	373.5	258.9	311.7	364.5	249.5	301.9	354.3	233.5	282.6	331.6	217	262.6	308.2
		67	THC	371.1	371.1	371.1	354.3	354.3	354.3	334.7	334.7	334.7	310.9	310.9	310.9	284.1	284.1	289.8
			SHC	214.5	267.9	321.3	208.2	262	315.7	200.9	254.9	308.9	191.9	246	300.1	181.7	235.7	289.8
		72	THC	398.6	398.6	398.6	383.8	383.8	383.8	365.7	365.7	365.7	344.9	344.9	344.9	319.5	319.5	319.5
			SHC	157.3	210.1	262.8	152.2	205.4	258.7	145.8	199.4	252.9	138.7	192.5	246.3	122.5	176.2	230
		76	THC	–	415.7	415.7	–	402.3	402.3	–	384.9	384.9	–	364.5	364.5	–	355.1	355.1
			SHC	–	165.2	223.6	–	160.5	218	–	154.6	211.3	–	147.8	203.9	–	143.3	199.4
11,250 CFM	EAT (wb)	58	THC	342.7	342.7	387.3	328.7	328.7	371.4	312.7	312.7	353.3	293.5	293.5	331.7	272.7	272.7	308.2
			SHC	298.1	342.7	387.3	285.9	328.7	371.4	272	312.7	353.3	255.3	293.5	331.7	237.2	272.7	308.2
		62	THC	346.8	346.8	396.7	329.7	329.7	387	313	313	367.3	293.8	293.8	344.8	273	273	320.4
			SHC	281.1	338.9	396.7	272.5	329.7	387	258.6	313	367.3	242.8	293.8	344.8	225.6	273	320.4
		67	THC	377.2	377.2	377.2	360.4	360.4	360.4	340.7	340.7	340.7	316.6	316.6	321.8	289.3	289.3	311.2
			SHC	223.7	282.5	341.2	217.9	277.2	336.5	210.8	270.5	330.2	202.1	261.9	321.8	191.7	251.4	311.2
		72	THC	403.1	403.1	403.1	388.6	388.6	388.6	370.3	370.3	370.3	349.5	349.5	349.5	324	324	324
			SHC	160.3	217.7	275.1	155.5	213.7	271.9	149.3	208	266.7	142.4	201.4	260.5	125.3	184.4	243.6
		76	THC	–	419.3	419.3	–	406	406	–	388.5	388.5	–	367.8	367.8	–	358.4	358.4
			SHC	–	168.8	231.3	–	164.4	226.3	–	158.6	220	–	151.9	212.8	–	147.2	147.9
12,500 CFM	EAT (wb)	58	THC	353	353	398.9	338.8	338.8	382.9	322.5	322.5	364.5	303.1	303.1	342.5	281.8	281.8	318.4
			SHC	307.1	353	398.9	294.7	338.8	382.9	280.6	322.5	364.5	263.7	303.1	342.5	245.1	281.8	318.4
		62	THC	353.9	353.9	415.3	339.1	339.1	397.9	322.8	322.8	378.9	303.4	303.4	356	282	282	331
			SHC	292.4	353.9	415.3	280.2	339.1	397.9	266.8	322.8	378.9	250.7	303.4	356	233.1	282	331
		67	THC	381.9	381.9	381.9	365.2	365.2	365.2	345.3	345.3	350.4	321.3	321.3	342.2	293.9	293.9	331
			SHC	232.3	296.1	360	227	291.6	356.3	220.1	285.2	350.4	211.5	276.8	342.2	200.9	266	331
		72	THC	406.6	406.6	406.6	392.2	392.2	392.2	373.9	373.9	373.9	352.9	352.9	352.9	327.5	327.5	327.5
			SHC	163.1	224.8	286.6	158.5	221.4	284.3	152.5	216.1	279.6	145.7	209.8	273.9	128.2	192	255.7
		76	THC	–	422.1	422.1	–	408.9	408.9	–	391.2	391.2	–	370.3	370.3	–	360.9	360.9
			SHC	–	172.2	238.5	–	167.9	234	–	162.3	228.1	–	155.7	221.2	–	150.8	215.9

* Humidi–MiZer available for 17–28 sizes only

LEGEND:

– – Do not operate
Cfm – Cubic feet per minute (supply air)
EAT(db) – Entering air temperature (dry bulb)
EAT(wb) – Entering air temperature (wet bulb)
SHC – Sensible heat capacity
TC – Total capacity

STATIC PRESSURE ADDERS (in wg.) - Factory Options and/or Accessories

Humidi-MiZer Coil

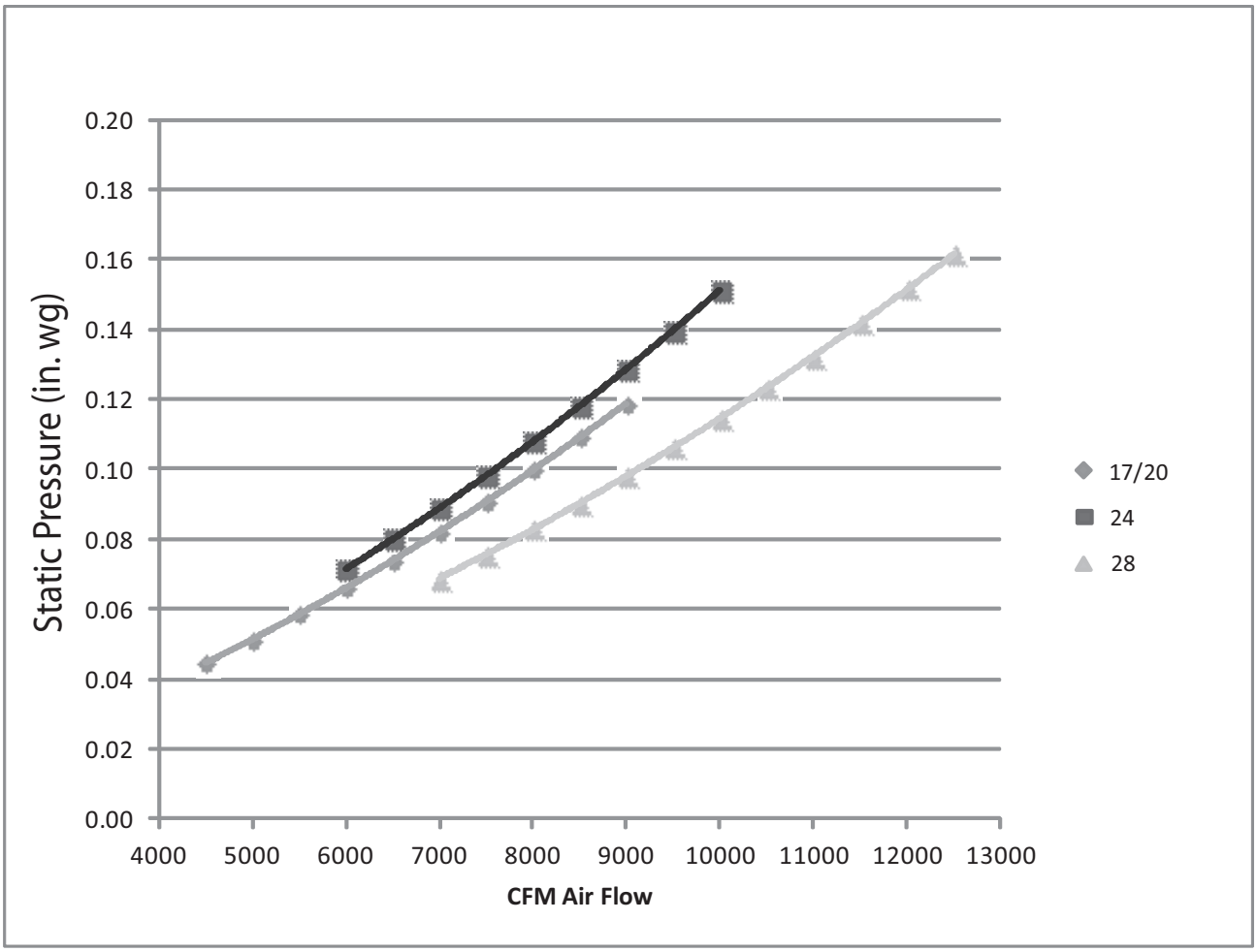

C11175A

Economizer - Vertical and Horizontal Duct Configuration

MODEL SIZES 17 – 30								
CFM	**4500**	**5000**	**5500**	**6000**	**6500**	**7000**	**7500**	**8000**
Static Pressure Adder (in. wg)	0.047	0.052	0.057	0.062	0.067	0.072	0.077	0.082

MODEL SIZES 17 – 30									
CFM	**8500**	**9000**	**9500**	**10000**	**10500**	**11000**	**11500**	**12000**	**12500**
Static Pressure Adder (in. wg)	0.088	0.093	0.098	0.103	0.109	0.114	0.119	0.125	0.131

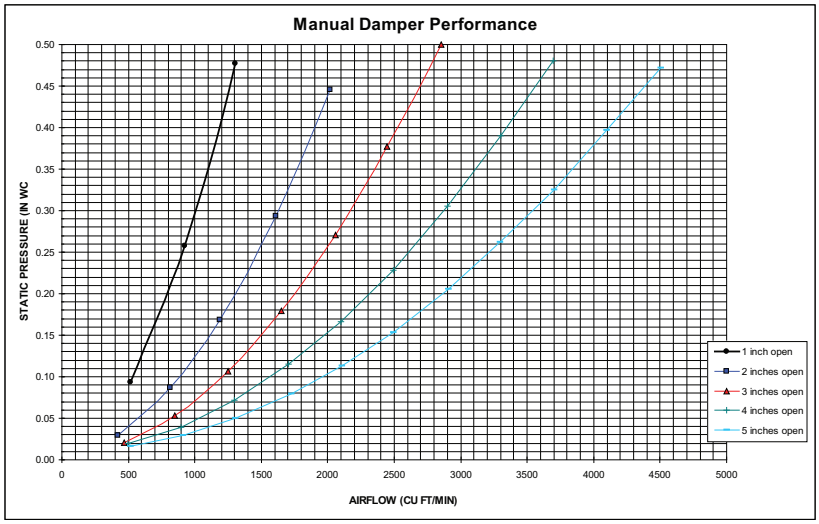

C09264

Fig. 12 - Manual Damper Performance

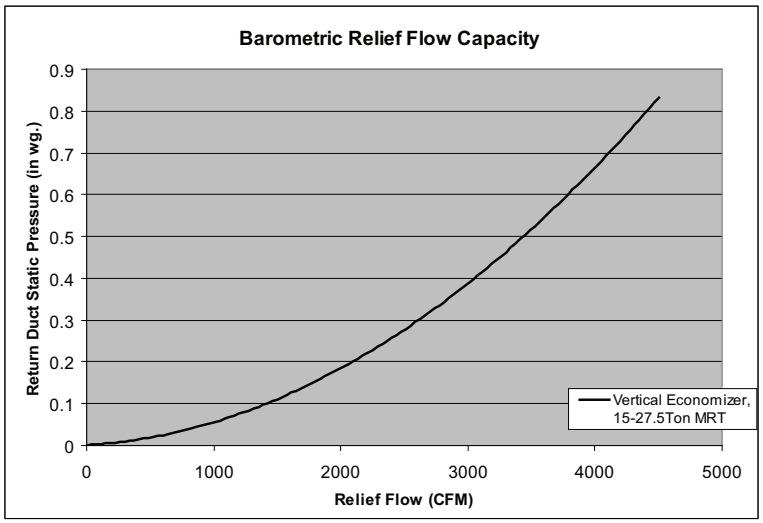

C11307

Fig. 13 - Barometric Relief Flow Capacity

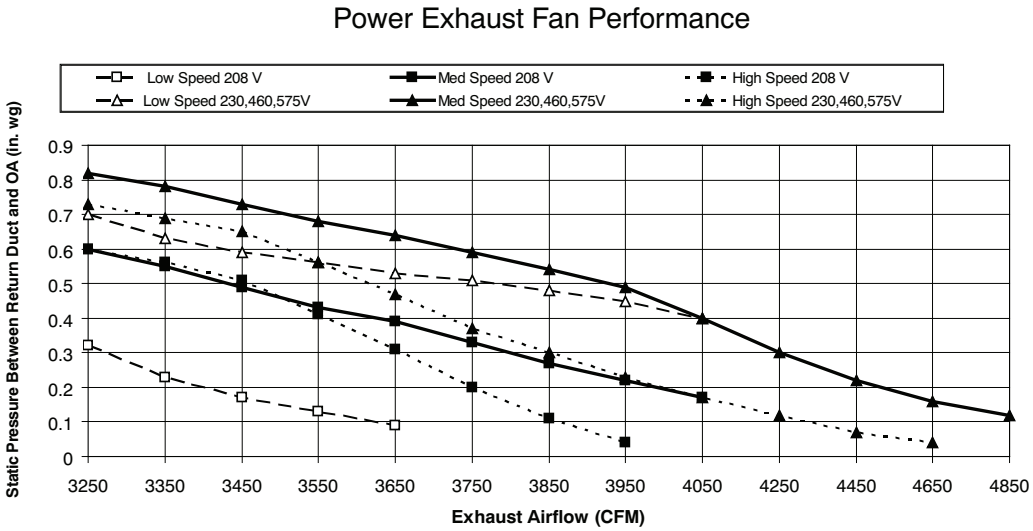

C11308

Fig. 14 - Power Exhaust Fan Performance

General fan performance notes:

1. Interpolation is permissible. Do not extrapolate.
2. External static pressure is the static pressure difference between the return duct and the supply duct plus the static pressure caused by any FIOPs or accessories.
3. Tabular data accounts for pressure loss due to clean filters, high gas heat, unit casing, and wet coils. Factory options and accessories may add static pressure losses, as shown in the table above. Selection software is available, through your salesperson, to help you select the best motor/drive combination for your application.
4. The Fan Performance tables offer motor/drive recommendations. In cases when two motor/drive combinations would work, Carrier recommended the lower horsepower option.
5. For information on the electrical properties of Carrier motors, please see the Electrical information section of this book.
6. For more information on the performance limits of Carrier motors, see the application data section of this book.

FAN PERFORMANCE

Table 18 – 48TC*D17 **VERTICAL SUPPLY / RETURN** **15 TON**

CFM	Available External Static Pressure (in. wg)									
	0.2		0.4		0.6		0.8		1.0	
	RPM	BHP	RPM	BHP	RPM	BHP	RPM	BHP	RPM	BHP
4500	**490**	**0.76**	575	1.07	653	1.41	724	1.79	791	2.19
4900	517	0.92	597	1.24	671	1.60	740	1.99	804	2.41
5250	541	1.08	618	1.42	688	1.79	754	2.19	817	2.62
5600	566	1.26	639	1.61	707	2.00	770	2.42	831	2.86
6000	595	1.49	664	1.86	729	2.27	790	2.70	848	3.15
6400	624	1.75	690	2.14	751	2.56	810	3.01	866	3.48
6750	650	2.00	713	2.41	772	2.84	829	3.30	883	3.79
7100	**676**	**2.27**	736	2.70	793	3.15	848	3.63	901	4.13
7500	706	2.62	763	3.06	**819**	**3.54**	871	4.03	922	4.55

CFM	Available External Static Pressure (in. wg)									
	1.2		1.4		1.6		1.8		2.0	
	RPM	BHP	RPM	BHP	RPM	BHP	RPM	BHP	RPM	BHP
4500	854	2.63	913	3.09	970	3.57	**1024**	**4.09**	**1077**	**4.62**
4900	**865**	**2.86**	923	3.33	978	3.83	**1031**	**4.35**	**1082**	**4.89**
5250	876	3.08	932	3.56	986	4.07	**1038**	**4.60**	----	----
5600	888	3.33	943	3.82	995	4.34	**1046**	**4.88**	----	----
6000	903	3.64	956	4.14	1008	4.67	----	----	----	----
6400	920	3.98	971	4.50	----	----	----	----	----	----
6750	935	4.30	986	4.83	----	----	----	----	----	----
7100	952	4.65	----	----	----	----	----	----	----	----
7500	----	----	----	----	----	----	----	----	----	----

Std Static Motor and Drive – 514–680 RPM, Max BHP 2.2
Medium Static Motor and Drive – 679–863 RPM, Max BHP 3.3
High Static Motor and Drive – 826–1009 RPM, Max BHP 4.9
---- Outside operating range
Boldface – Field–supplied Drive

Table 19 – 48TC*D20 **VERTICAL SUPPLY / RETURN** **17.5 TON**

CFM	Available External Static Pressure (in. wg)									
	0.2		0.4		0.6		0.8		1.0	
	RPM	BHP	RPM	BHP	RPM	BHP	RPM	BHP	RPM	BHP
5250	**541**	**1.08**	**618**	**1.42**	688	1.79	754	2.19	817	2.62
5700	**573**	**1.31**	645	1.67	712	2.06	775	2.48	835	2.93
6100	**602**	**1.55**	670	1.93	734	2.34	795	2.77	852	3.23
6500	631	1.81	696	2.21	757	2.64	815	3.09	871	3.57
7000	668	2.19	729	2.61	787	3.06	843	3.53	896	4.03
7500	706	2.62	763	3.06	819	3.54	871	4.03	922	4.55
7900	736	3.00	791	3.47	844	3.96	895	4.47	944	5.00
8300	767	3.42	819	3.90	870	4.41	919	4.94	967	5.49
8750	801	3.94	852	4.44	900	4.97	948	5.52	993	6.09

CFM	Available External Static Pressure (in. wg)									
	1.2		1.4		1.6		1.8		2.0	
	RPM	BHP	RPM	BHP	RPM	BHP	RPM	BHP	RPM	BHP
5250	876	3.08	932	3.56	986	4.07	1038	4.60	**1088**	**5.15**
5700	892	3.40	946	3.90	998	4.42	1049	4.96	**1097**	**5.52**
6100	907	3.72	960	4.23	1011	4.76	1060	5.31	**1107**	**5.89**
6500	924	4.07	975	4.59	1025	5.13	1072	5.70	**1119**	**6.28**
7000	947	4.55	996	5.09	1044	5.65	**1090**	**6.23**	----	----
7500	971	5.08	1019	5.64	1064	6.22	----	----	----	----
7900	992	5.55	1038	6.13	----	----	----	----	----	----
8300	1013	6.06	----	----	----	----	----	----	----	----
8750	----	----	----	----	----	----	----	----	----	----

Std Static Motor and Drive – 622–822 RPM, Max BHP 3.3
Medium Static Motor and Drive – 713–879 RPM, Max BHP 4.9
High Static Motor and Drive – 882–1078 RPM, Max BHP 6.5
---- Outside operating range
Boldface – Field–supplied Drive

FAN PERFORMANCE (cont.)

Table 20 – 48TC*D24 VERTICAL SUPPLY / RETURN **20 TON**

CFM	Available External Static Pressure (in. wg)									
	0.2		0.4		0.6		0.8		1.0	
	RPM	BHP	RPM	BHP	RPM	BHP	RPM	BHP	RPM	BHP
6000	**605**	**1.48**	**674**	**1.77**	738	2.08	798	2.41	854	2.74
6500	**644**	**1.82**	709	2.14	770	2.47	827	2.81	881	3.17
7000	**683**	**2.22**	744	2.56	802	2.91	857	3.28	908	3.65
7500	722	2.68	781	3.04	836	3.41	888	3.80	938	4.19
8000	762	3.20	818	3.58	870	3.97	920	4.38	968	4.79
8500	803	3.78	855	4.19	905	4.60	953	5.02	999	5.46
9000	843	4.43	893	4.86	941	5.30	987	5.74	1032	6.19
9500	884	5.15	932	5.61	978	6.06	1022	6.53	1065	7.01
10000	925	5.95	970	6.43	1015	6.91	1057	7.40	1098	7.89

CFM	Available External Static Pressure (in. wg)									
	1.2		1.4		1.6		1.8		2.0	
	RPM	BHP	RPM	BHP	RPM	BHP	RPM	BHP	RPM	BHP
6000	907	3.10	958	3.46	1006	3.84	1052	4.23	1097	4.63
6500	932	3.54	981	3.92	1027	4.31	1073	4.72	1116	5.14
7000	958	4.04	1005	4.43	1051	4.84	1094	5.27	1137	5.70
7500	985	4.59	1031	5.01	1075	5.44	1118	5.87	1159	6.32
8000	1014	5.21	1058	5.65	1101	6.09	1142	6.55	– – – –	– – – –
8500	1044	5.90	1087	6.35	1128	6.82	1168	7.29	– – – –	– – – –
9000	1075	6.66	1116	7.13	1156	7.61	– – – –	– – – –	– – – –	– – – –
9500	1106	7.49	1146	7.98	– – – –	– – – –	– – – –	– – – –	– – – –	– – – –
10000	1139	8.40	– – – –	– – – –	– – – –	– – – –	– – – –	– – – –	– – – –	– – – –

Std Static Motor and Drive – 690–863 RPM, Max BHP 4.9
Medium Static Motor and Drive – 835–1021 RPM, Max BHP 6.5
High Static Motor and Drive – 941–1176 RPM, Max BHP 8.7
– – – – Outside operating range
Boldface – Field–supplied Drive

Table 21 – 48TC*D28 VERTICAL SUPPLY / RETURN **25 TON**

CFM	Available External Static Pressure (in. wg)									
	0.2		0.4		0.6		0.8		1.0	
	RPM	BHP	RPM	BHP	RPM	BHP	RPM	BHP	RPM	BHP
7500	**713**	**2.25**	778	2.61	838	2.97	894	3.36	946	3.76
8000	752	2.68	814	3.06	871	3.44	925	3.85	976	4.26
8500	791	3.17	850	3.56	905	3.97	957	4.39	1006	4.83
9000	831	3.71	887	4.12	939	4.55	989	4.99	1037	5.45
9500	870	4.31	924	4.75	974	5.19	1023	5.66	1069	6.13
10000	910	4.83	961	5.43	1010	5.90	1057	6.38	1102	6.87
10500	950	5.70	999	6.18	1046	6.67	1091	7.17	1135	7.69
11000	990	6.50	1037	7.01	1083	7.52	1126	8.04	1168	8.57
11500	1030	7.38	1076	7.90	1119	8.43	– – – –	– – – –	– – – –	– – – –
12000	1070	8.33	– – – –	– – – –	– – – –	– – – –	– – – –	– – – –	– – – –	– – – –
12500	– – – –	– – – –	– – – –	– – – –	– – – –	– – – –	– – – –	– – – –	– – – –	– – – –

CFM	Available External Static Pressure (in. wg)									
	1.2		1.4		1.6		1.8		2.0	
	RPM	BHP	RPM	BHP	RPM	BHP	RPM	BHP	RPM	BHP
7500	996	4.17	1044	4.60	1089	5.05	1133	5.51	1175	5.98
8000	1024	4.70	1071	5.14	1115	5.60	1158	6.07	– – – –	– – – –
8500	1053	5.27	1098	5.74	1141	6.21	– – – –	– – – –	– – – –	– – – –
9000	1083	5.91	1127	6.39	1169	6.88	– – – –	– – – –	– – – –	– – – –
9500	1113	6.61	1156	7.11	– – – –	– – – –	– – – –	– – – –	– – – –	– – – –
10000	1145	7.38	– – – –	– – – –	– – – –	– – – –	– – – –	– – – –	– – – –	– – – –
10500	– – – –	– – – –	– – – –	– – – –	– – – –	– – – –	– – – –	– – – –	– – – –	– – – –
11000	– – – –	– – – –	– – – –	– – – –	– – – –	– – – –	– – – –	– – – –	– – – –	– – – –
11500	– – – –	– – – –	– – – –	– – – –	– – – –	– – – –	– – – –	– – – –	– – – –	– – – –
12000	– – – –	– – – –	– – – –	– – – –	– – – –	– – – –	– – – –	– – – –	– – – –	– – – –
12500	– – – –	– – – –	– – – –	– – – –	– – – –	– – – –	– – – –	– – – –	– – – –	– – – –

Std Static Motor and Drive – 717–911 RPM, Max BHP 4.9
Medium Static Motor and Drive – 913–1116 RPM, Max BHP 6.5
High Static Motor and Drive – 941–1176 RPM, Max BHP 8.7
– – – – Outside operating range
Boldface – Field–supplied Drive

FAN PERFORMANCE (cont.)

Table 22 – 48TC*D30 **VERTICAL SUPPLY / RETURN** **27.5 TON**

CFM	Available External Static Pressure (in. wg)									
	0.2		0.4		0.6		0.8		1.0	
	RPM	BHP	RPM	BHP	RPM	BHP	RPM	BHP	RPM	BHP
8250	791	2.86	852	3.28	908	3.72	960	4.16	1010	4.60
8800	836	3.40	893	3.86	947	4.32	998	4.78	1045	5.26
9350	881	4.02	936	4.50	987	4.99	1036	5.48	1082	5.98
9900	926	4.71	979	5.22	1028	5.74	1075	6.26	1120	6.78
10450	972	5.48	1022	6.02	1069	6.56	1115	7.11	1158	7.66
11000	1018	6.33	1066	6.90	1111	7.47	1155	8.04	1197	8.62
11550	1064	7.27	1110	7.86	1154	8.46	1196	9.06	1236	9.66
12100	1110	8.30	1154	8.92	1196	9.54	1237	10.17	1277	10.80
12650	1156	9.42	1199	10.07	1240	10.72	1279	11.38	– – – –	– – – –
13200	1203	10.64	1244	11.32	– – – –	– – – –	– – – –	– – – –	– – – –	– – – –
13750	– – – –	– – – –	– – – –	– – – –	– – – –	– – – –	– – – –	– – – –	– – – –	– – – –

CFM	Available External Static Pressure (in. wg)									
	1.2		1.4		1.6		1.8		2.0	
	RPM	BHP	RPM	BHP	RPM	BHP	RPM	BHP	RPM	BHP
8250	1056	5.05	1101	5.51	1144	5.98	1185	6.45	1225	6.93
8800	1091	5.73	1134	6.22	1176	6.71	1216	7.20	1255	7.71
9350	1126	6.48	1168	6.99	1209	7.51	1248	8.03	1286	8.56
9900	1162	7.31	1203	7.84	1243	8.38	1281	8.93	1319	9.48
10450	1199	8.21	1239	8.77	1278	9.34	1315	9.91	1352	10.49
11000	1237	9.20	1276	9.79	1314	10.38	1350	10.97	– – – –	– – – –
11550	1276	10.27	1313	10.89	1350	11.50	– – – –	– – – –	– – – –	– – – –
12100	1315	11.44	– – – –	– – – –	– – – –	– – – –	– – – –	– – – –	– – – –	– – – –
12650	– – – –	– – – –	– – – –	– – – –	– – – –	– – – –	– – – –	– – – –	– – – –	– – – –
13200	– – – –	– – – –	– – – –	– – – –	– – – –	– – – –	– – – –	– – – –	– – – –	– – – –
13750	– – – –	– – – –	– – – –	– – – –	– – – –	– – – –	– – – –	– – – –	– – – –	– – – –

Std Static Motor and Drive – 751–954 RPM, Max BHP 6.5
Medium Static Motor and Drive – 920–1190 RPM, Max BHP 10.5
High Static Motor & Drive – 1116–1400 RPM, Max BHP 11.9
– – – – Outside operating range
Boldface – Field–supplied Drive

48TC

FAN PERFORMANCE (cont.)

Table 23 – 48TC*D17 **HORIZONTAL SUPPLY / RETURN** **15 TON**

CFM	Available External Static Pressure (in. wg)									
	0.2		0.4		0.6		0.8		1.0	
	RPM	BHP	RPM	BHP	RPM	BHP	RPM	BHP	RPM	BHP
4500	523	1.13	593	1.56	656	2.03	713	2.55	766	3.10
4900	557	1.38	623	1.84	683	2.33	738	2.87	**790**	**3.44**
5250	587	1.62	650	2.11	708	2.63	761	3.18	811	3.77
5600	617	1.90	678	2.41	733	2.95	785	3.53	833	4.14
6000	652	2.25	710	2.80	763	3.37	813	3.97	860	4.60
6400	688	2.65	743	3.24	794	3.84	841	4.46	– – – –	– – – –
6750	719	3.04	772	3.66	821	4.29	– – – –	– – – –	– – – –	– – – –
7100	750	3.47	802	4.12	849	4.78	– – – –	– – – –	– – – –	– – – –
7500	786	4.01	836	4.70	– – – –	– – – –	– – – –	– – – –	– – – –	– – – –

CFM	Available External Static Pressure (in. wg)									
	1.2		1.4		1.6		1.8		2.0	
	RPM	BHP	RPM	BHP	RPM	BHP	RPM	BHP	RPM	BHP
4500	814	3.68	859	4.27	901	4.88	– – – –	– – – –	– – – –	– – – –
4900	837	4.05	882	4.67	– – – –	– – – –	– – – –	– – – –	– – – –	– – – –
5250	858	4.40	– – – –	– – – –	– – – –	– – – –	– – – –	– – – –	– – – –	– – – –
5600	879	4.78	– – – –	– – – –	– – – –	– – – –	– – – –	– – – –	– – – –	– – – –
6000	– – – –	– – – –	– – – –	– – – –	– – – –	– – – –	– – – –	– – – –	– – – –	– – – –
6400	– – – –	– – – –	– – – –	– – – –	– – – –	– – – –	– – – –	– – – –	– – – –	– – – –
6750	– – – –	– – – –	– – – –	– – – –	– – – –	– – – –	– – – –	– – – –	– – – –	– – – –
7100	– – – –	– – – –	– – – –	– – – –	– – – –	– – – –	– – – –	– – – –	– – – –	– – – –
7500	– – – –	– – – –	– – – –	– – – –	– – – –	– – – –	– – – –	– – – –	– – – –	– – – –

Std Static Motor and Drive – 514–680 RPM, Max BHP 2.2
Medium Static Motor and Drive – 614–780 RPM, Max BHP 3.3
High Static Motor and Drive – 746–912 RPM, Max BHP 4.9
– – – – Outside operating range
Boldface – Field–supplied Drive

Table 24 – 48TC*D20 **HORIZONTAL SUPPLY / RETURN** **17.5 TON**

CFM	Available External Static Pressure (in. wg)									
	0.2		0.4		0.6		0.8		1.0	
	RPM	BHP	RPM	BHP	RPM	BHP	RPM	BHP	RPM	BHP
5250	**587**	**1.62**	650	2.11	708	2.63	761	3.18	811	3.77
5700	626	1.98	686	2.51	740	3.05	791	3.63	840	4.25
6100	661	2.35	718	2.91	771	3.48	820	4.09	866	4.73
6500	696	2.76	751	3.36	802	3.96	849	4.59	894	5.25
7000	741	3.34	793	3.99	841	4.63	886	5.30	929	5.99
7500	786	4.01	836	4.70	882	5.39	925	6.09	– – – –	– – – –
7900	823	4.60	**871**	**5.34**	915	6.06	– – – –	– – – –	– – – –	– – – –
8300	**860**	**5.26**	906	6.03	– – – –	– – – –	– – – –	– – – –	– – – –	– – – –
8750	901	6.06	– – – –	– – – –	– – – –	– – – –	– – – –	– – – –	– – – –	– – – –

CFM	Available External Static Pressure (in. wg)									
	1.2		1.4		1.6		1.8		2.0	
	RPM	BHP	RPM	BHP	RPM	BHP	RPM	BHP	RPM	BHP
5250	858	4.40	902	5.05	943	5.72	983	6.41	– – – –	– – – –
5700	885	4.90	928	5.58	969	6.28	– – – –	– – – –	– – – –	– – – –
6100	911	5.40	953	6.10	– – – –	– – – –	– – – –	– – – –	– – – –	– – – –
6500	937	5.94	– – – –	– – – –	– – – –	– – – –	– – – –	– – – –	– – – –	– – – –
7000	– – – –	– – – –	– – – –	– – – –	– – – –	– – – –	– – – –	– – – –	– – – –	– – – –
7500	– – – –	– – – –	– – – –	– – – –	– – – –	– – – –	– – – –	– – – –	– – – –	– – – –
7900	– – – –	– – – –	– – – –	– – – –	– – – –	– – – –	– – – –	– – – –	– – – –	– – – –
8300	– – – –	– – – –	– – – –	– – – –	– – – –	– – – –	– – – –	– – – –	– – – –	– – – –
8750	– – – –	– – – –	– – – –	– – – –	– – – –	– – – –	– – – –	– – – –	– – – –	– – – –

Std Static Motor and Drive – 622–822 RPM, Max BHP 3.3
Medium Static Motor and Drive – 713–879 RPM, Max BHP 4.9
High Static Motor and Drive – 882–1078 RPM, Max BHP 6.5
– – – – Outside operating range
Boldface – Field–supplied Drive

FAN PERFORMANCE (cont.)

Table 25 – 48TC*D24 **HORIZONTAL SUPPLY / RETURN** **20 TON**

CFM	Available External Static Pressure (in. wg)									
	0.2		0.4		0.6		0.8		1.0	
	RPM	BHP	RPM	BHP	RPM	BHP	RPM	BHP	RPM	BHP
6000	**651**	**2.25**	709	2.78	762	3.35	812	3.96	858	4.60
6500	696	2.77	750	3.33	801	3.94	848	4.57	893	5.24
7000	741	3.37	792	3.96	840	4.60	886	5.27	929	5.97
7500	787	4.05	834	4.67	880	5.34	924	6.05	965	6.78
8000	833	4.83	878	5.48	921	6.18	963	6.92	1003	7.69
8500	879	5.70	922	6.39	963	7.13	1003	7.89	1042	8.69
9000	**926**	**6.69**	966	7.41	1006	8.17	– – – –	– – – –	– – – –	– – – –
9500	973	7.78	1011	8.54	– – – –	– – – –	– – – –	– – – –	– – – –	– – – –
10000	– – – –	– – – –	– – – –	– – – –	– – – –	– – – –	– – – –	– – – –	– – – –	– – – –

CFM	Available External Static Pressure (in. wg)									
	1.2		1.4		1.6		1.8		2.0	
	RPM	BHP	RPM	BHP	RPM	BHP	RPM	BHP	RPM	BHP
6000	902	5.25	943	5.93	983	6.62	1021	7.32	1057	8.04
6500	935	5.94	976	6.65	1014	7.38	1051	8.12	*1086*	*8.88*
7000	970	6.70	1009	7.44	1046	8.21	– – – –	– – – –	– – – –	– – – –
7500	1005	7.54	1043	8.32	– – – –	– – – –	– – – –	– – – –	– – – –	– – – –
8000	1042	8.48	– – – –	– – – –	– – – –	– – – –	– – – –	– – – –	– – – –	– – – –
8500	– – – –	– – – –	– – – –	– – – –	– – – –	– – – –	– – – –	– – – –	– – – –	– – – –
9000	– – – –	– – – –	– – – –	– – – –	– – – –	– – – –	– – – –	– – – –	– – – –	– – – –
9500	– – – –	– – – –	– – – –	– – – –	– – – –	– – – –	– – – –	– – – –	– – – –	– – – –
10000	– – – –	– – – –	– – – –	– – – –	– – – –	– – – –	– – – –	– – – –	– – – –	– – – –

Std Static Motor and Drive – 690–863 RPM, Max BHP 4.9
Medium Static Motor and Drive – 835–1021 RPM, Max BHP 6.5
High Static Motor and Drive – 941–1176 RPM, Max BHP 8.7
– – – – Outside operating range
Boldface – Field–supplied Drive

Table 26 – 48TC*D28 **HORIZONTAL SUPPLY / RETURN** **25 TON**

CFM	Available External Static Pressure (in. wg)									
	0.2		0.4		0.6		0.8		1.0	
	RPM	BHP	RPM	BHP	RPM	BHP	RPM	BHP	RPM	BHP
7500	715	3.12	767	3.68	815	4.28	862	4.90	906	5.58
8000	751	3.65	800	4.25	847	4.87	892	5.53	934	6.21
8500	786	4.24	834	4.86	879	5.51	922	6.19	963	6.90
9000	822	4.88	867	5.53	910	6.21	952	6.91	991	7.64
9500	856	5.57	916	6.25	941	6.95	981	7.68	**1020**	**8.44**
10000	890	6.33	932	7.03	973	7.76	**1011**	**8.52**	– – – –	– – – –
10500	924	7.14	965	7.87	1004	8.62		– – – –	– – – –	– – – –
11000	958	8.01	997	8.70	– – – –	– – – –	– – – –	– – – –	– – – –	– – – –
11500	991	8.94	1029	9.73	– – – –	– – – –	– – – –	– – – –	– – – –	– – – –

CFM	Available External Static Pressure (in. wg)									
	1.2		1.4		1.6		1.8		2.0	
	RPM	BHP	RPM	BHP	RPM	BHP	RPM	BHP	RPM	BHP
7500	948	6.27	988	6.98	**1027**	**7.72**	**1065**	**8.49**	– – – –	– – – –
8000	975	6.93	**1014**	**7.67**	**1052**	**8.43**	– – – –	– – – –	– – – –	– – – –
8500	1002	7.64	**1041**	**8.40**	– – – –	– – – –	– – – –	– – – –	– – – –	– – – –
9000	**1030**	**8.41**	– – – –	– – – –	– – – –	– – – –	– – – –	– – – –	– – – –	– – – –
9500	– – – –	– – – –	– – – –	– – – –	– – – –	– – – –	– – – –	– – – –	– – – –	– – – –
10000	– – – –	– – – –	– – – –	– – – –	– – – –	– – – –	– – – –	– – – –	– – – –	– – – –
10500	– – – –	– – – –	– – – –	– – – –	– – – –	– – – –	– – – –	– – – –	– – – –	– – – –
11000	– – – –	– – – –	– – – –	– – – –	– – – –	– – – –	– – – –	– – – –	– – – –	– – – –
11500	– – – –	– – – –	– – – –	– – – –	– – – –	– – – –	– – – –	– – – –	– – – –	– – – –

Std Static Motor and Drive – 647–791 RPM, Max BHP 4.9
Medium Static Motor and Drive – 755–923 RPM, Max BHP 6.5
High Static Motor and Drive – 827–1010 RPM, Max BHP 8.7
– – – – Outside operating range
Boldface – Field–supplied Drive

FAN PERFORMANCE (cont.)

Table 27 – 48TC*D30 **HORIZONTAL SUPPLY / RETURN** **27.5 TON**

CFM	Available External Static Pressure (in. wg)									
	0.2		0.4		0.6		0.8		1.0	
	RPM	BHP	RPM	BHP	RPM	BHP	RPM	BHP	RPM	BHP
8250	791	3.96	844	4.70	894	5.48	941	6.30	986	7.16
8800	837	4.70	887	5.48	934	6.30	980	7.16	1023	8.06
9350	883	5.53	930	6.35	976	7.21	1019	8.11	1061	9.04
9900	930	6.46	974	7.32	1018	8.22	1059	9.16	1099	10.13
10450	976	7.50	1019	8.40	1060	9.34	1100	10.32	1139	11.33
11000	1023	8.65	1064	9.59	1104	10.57	1142	11.59	1179	12.63
11550	1070	9.91	1109	10.89	– – – –	– – – –	– – – –	– – – –	– – – –	– – – –
12100	1118	11.30	– – – –	– – – –	– – – –	– – – –	– – – –	– – – –	– – – –	– – – –
12650	– – – –	– – – –	– – – –	– – – –	– – – –	– – – –	– – – –	– – – –	– – – –	– – – –
13200	– – – –	– – – –	– – – –	– – – –	– – – –	– – – –	– – – –	– – – –	– – – –	– – – –
13750	– – – –	– – – –	– – – –	– – – –	– – – –	– – – –	– – – –	– – – –	– – – –	– – – –

CFM	Available External Static Pressure (in. wg)									
	1.2		1.4		1.6		1.8		2.0	
	RPM	BHP	RPM	BHP	RPM	BHP	RPM	BHP	RPM	BHP
8250	1029	8.05	1070	8.97	1109	9.91	1147	10.88	1184	11.88
8800	1064	8.98	1104	9.94	1143	10.92	1180	11.93	– – – –	– – – –
9350	1101	10.01	1140	11.00	– – – –	– – – –	– – – –	– – – –	– – – –	– – – –
9900	1138	11.13	– – – –	– – – –	– – – –	– – – –	– – – –	– – – –	– – – –	– – – –
10450	– – – –	– – – –	– – – –	– – – –	– – – –	– – – –	– – – –	– – – –	– – – –	– – – –
11000	– – – –	– – – –	– – – –	– – – –	– – – –	– – – –	– – – –	– – – –	– – – –	– – – –
11550	– – – –	– – – –	– – – –	– – – –	– – – –	– – – –	– – – –	– – – –	– – – –	– – – –
12100	– – – –	– – – –	– – – –	– – – –	– – – –	– – – –	– – – –	– – – –	– – – –	– – – –
12650	– – – –	– – – –	– – – –	– – – –	– – – –	– – – –	– – – –	– – – –	– – – –	– – – –
13200	– – – –	– – – –	– – – –	– – – –	– – – –	– – – –	– – – –	– – – –	– – – –	– – – –
13750	– – – –	– – – –	– – – –	– – – –	– – – –	– – – –	– – – –	– – – –	– – – –	– – – –

Std Static Motor and Drive – 687–873 RPM, Max BHP 6.5
Medium Static Motor and Drive – 857–1047 RPM, Max BHP 10.5
High Static Motor & Drive – 1021–1281 RPM, Max BHP 11.9
– – – – Outside operating range
Boldface – Field–supplied Drive

Table 28 – PULLEY ADJUSTMENT - Vertical

Unit	Motor/Drive Combo	Motor Pulley turns open										
		0	0.5	1	1.5	2	2.5	3	3.5	4	4.5	5
17	Standard Static	680	663	647	630	614	597	580	564	547	531	514
	Medium Static	863	845	826	808	789	771	753	734	716	697	679
	High Static	1009	991	972	954	936	918	899	881	863	844	826
20	Standard Static	822	802	782	762	742	722	702	682	662	642	622
	Medium Static	879	862	846	829	813	796	779	763	746	730	713
	High Static	1078	1058	1039	1019	1000	980	960	941	921	902	882
24	Standard Static	863	846	828	811	794	777	759	742	725	707	690
	Medium Static	1021	1002	984	965	947	928	909	891	872	854	835
	High Static	1176	1153	1129	1106	1082	1059	1035	1012	988	965	941
28	Standard Static	911	892	872	853	833	814	795	775	756	736	717
	Medium Static	1116	1096	1075	1055	1035	1015	994	974	954	933	913
	High Static	1176	1153	1129	1106	1082	1059	1035	1012	988	965	941
30	Standard Static	954	934	913	893	873	853	832	812	792	771	751
	Medium Static	1190	1163	1136	1109	1082	1055	1028	1001	974	947	920
	High Static	1400	1372	1343	1315	1286	1258	1230	1201	1173	1144	1116

Table 29 – PULLEY ADJUSTMENT Horizontal

Unit	Motor/Drive Combo	Motor Pulley turns open										
		0	0.5	1	1.5	2	2.5	3	3.5	4	4.5	5
17	Standard Static	680	663	647	630	614	597	580	564	547	531	514
	Medium Static	780	763	747	730	714	697	680	664	647	631	614
	High Static	912	895	879	862	846	829	812	796	779	763	746
20	Standard Static	822	802	782	762	742	722	702	682	662	642	622
	Medium Static	879	862	846	829	813	796	779	763	746	730	713
	High Static	1078	1058	1039	1019	1000	980	960	941	921	902	882
24	Standard Static	863	846	828	811	794	777	759	742	725	707	690
	Medium Static	1021	1002	984	965	947	928	909	891	872	854	835
	High Static	1176	1153	1129	1106	1082	1059	1035	1012	988	965	941
28	Standard Static	791	777	762	748	733	719	705	690	676	661	647
	Medium Static	923	906	889	873	856	839	822	805	789	772	755
	High Static	1010	992	973	955	937	919	900	882	864	845	827
30	Standard Static	873	854	836	817	799	780	761	743	724	706	687
	Medium Static	1047	1028	1009	990	971	952	933	914	895	876	857
	High Static	1281	1255	1229	1203	1177	1151	1125	1099	1073	1047	1021

NOTE: Do not adjust pulley further than 5 turns open.

– Factory settings

Table 30 – 2-Stage Cooling **15 - 20 Tons**

UNIT	V–Ph–Hz	VOLTAGE RANGE		COMP 1		COMP 2		OFM (ea)		IFM		
		MIN	MAX	RLA	LRA	RLA	LRA	WATTS	FLA	TYPE	EFF at Full Load	FLA
17	208–3–60	187	253	29.5	195	30.1	225	350	1.5	STD	81.3%	7.5
										MED	83.8%	10.2
										HIGH	83.6%	15.0
	230–3–60	187	253	29.5	195	30.1	225	350	1.5	STD	81.3%	7.5
										MED	83.8%	10.2
										HIGH	83.6%	15.0
	460–3–60	414	506	14.7	95	16.7	114	277	0.9	STD	81.3%	3.4
										MED	83.8%	4.8
										HIGH	83.6%	7.4
	575–3–60	518	633	12.2	80	12.2	80	397	0.6	STD	81.1%	2.8
										MED	81.1%	2.8
										HIGH	83.6%	5.6
20	208–3–60	187	253	29.5	195	30.1	225	350	1.5	STD	83.8%	10.2
										MED	83.6%	15.0
										HIGH	87.5%	12.8
										HIGH–High Eff	89.5%	17.1
	230–3–60	187	253	29.5	195	30.1	225	350	1.5	STD	83.8%	10.2
										MED	83.6%	15.0
										HIGH	87.5%	12.8
										HIGH–High Eff	89.5%	17.1
	460–3–60	414	506	14.7	95	16.7	114	277	0.9	STD	83.8%	4.8
										MED	83.6%	7.4
										HIGH	87.5%	6.4
										HIGH–High Eff	89.5%	8.6
	575–3–60	518	633	12.2	80	12.2	80	397	0.6	STD	81.1%	2.8
										MED	83.6%	5.6
										HIGH	87.5%	5.1
										HIGH–High Eff	89.5%	7.6
24	208–3–60	187	253	48.1	245	29.5	195	350	1.5	STD	83.6%	15.0
										MED	87.5%	12.8
										HIGH	88.5%	19.4
										MED–High Eff	89.5%	17.1
										HIGH–High Eff	91.7%	28.5
	230–3–60	187	253	48.1	245	29.5	195	350	1.5	STD	83.6%	15.0
										MED	87.5%	12.8
										HIGH	88.5%	19.4
										MED–High Eff	89.5%	17.1
										HIGH–High Eff	91.7%	28.5
	460–3–60	414	506	18.6	125	14.7	95	277	0.9	STD	83.6%	7.4
										MED	87.5%	6.4
										HIGH	88.5%	9.7
										MED–High Eff	89.5%	8.6
										HIGH–High Eff	91.7%	14.3
	575–3–60	518	633	14.7	100	12.2	80	397	0.6	STD	83.6%	5.6
										MED	87.5%	5.1
										HIGH	88.5%	7.8
										MED–High Eff	89.5%	7.6
										HIGH–High Eff	91.7%	9.5

Table 31 – 2-Stage Cooling **25 - 27.5 Tons**

UNIT	V–Ph–Hz	VOLTAGE RANGE		COMP 1		COMP 2		OFM (ea)		IFM		
		MIN	MAX	RLA	LRA	RLA	LRA	WATTS	FLA	TYPE	EFF at Full Load	FLA
28	208–3–60	187	253	48.1	245	48.1	245	350	1.5	STD	83.6%	15.0
										MED	87.5%	12.8
										HIGH	88.5%	19.4
										MED–High Eff	89.5%	17.1
										HIGH–High Eff	91.7%	28.5
	230–3–60	187	253	48.1	245	48.1	245	350	1.5	STD	83.6%	15.0
										MED	87.5%	12.8
										HIGH	88.5%	19.4
										MED–High Eff	89.5%	17.1
										HIGH–High Eff	91.7%	28.5
	460–3–60	414	506	18.6	125	18.6	125	277	0.9	STD	83.6%	7.4
										MED	87.5%	6.4
										HIGH	88.5%	9.7
										MED–High Eff	89.5%	8.6
										HIGH–High Eff	91.7%	14.3
	575–3–60	518	633	14.7	100	14.7	100	397	0.6	STD	83.6%	5.6
										MED	87.5%	5.1
										HIGH	88.5%	7.8
										MED–High Eff	89.5%	7.6
										HIGH–High Eff	91.7%	9.5
30	208–3–60	187	253	51.3	300	51.3	300	350	1.5	STD–High Eff	89.5%	17.1
										MED–High Eff	91.7%	28.5
										HIGH–High Eff	91.7%	30.4
	230–3–60	187	253	51.3	300	51.3	300	350	1.5	STD–High Eff	89.5%	17.1
										MED–High Eff	91.7%	28.5
										HIGH–High Eff	91.7%	30.4
	460–3–60	414	506	23.1	150	23.1	150	277	0.9	STD–High Eff	89.5%	8.6
										MED–High Eff	91.7%	14.3
										HIGH–High Eff	91.7%	15.2
	575–3–60	518	633	19.9	109	19.9	109	397	0.6	STD–High Eff	89.5%	7.6
										MED–High Eff	91.7%	9.5
										HIGH–High Eff	91.7%	12.4

Table 32 – MCA/MOCP DETERMINATION NO C.O. OR UNPWRD C.O. **17 - 20 Tons**

UNIT	NOM. V–Ph–Hz	IFM	COMBUSTION FAN MOTOR	POWER EXHAUST	NO C.O. or UNPWR C.O.							
					NO P.E.				w/ P.E. (pwrd fr/ unit)			
							DISC. SIZE				DISC. SIZE	
		TYPE	FLA	FLA	MCA	MOCP	FLA	LRA	MCA	MOCP	FLA	LRA
17	208/230–3–60	STD	0.52	5.9	79.1	100.0	82	485	90.9	100.0	96	505
		MED			81.8	100.0	85	502	93.6	110.0	99	522
		HIGH			86.6	100.0	91	511	98.4	125.0	105	531
	460–3–60	STD	0.3	3.1	41.7	50.0	43	243	47.9	60.0	50	255
		MED			43.1	50.0	45	252	49.3	60.0	52	264
		HIGH			45.7	60.0	48	256	51.9	60.0	55	268
	575–3–60	STD	0.24	2.4	32.1	40.0	33	188	36.9	45.0	39	196
		MED			32.1	40.0	33	188	36.9	45.0	39	196
		HIGH			34.9	45.0	37	202	39.7	50.0	42	210
20	208/230–3–60	STD	0.52	5.9	81.8	100.0	85	502	93.6	110.0	99	522
		MED			86.6	100.0	91	511	98.4	125.0	105	531
		HIGH			84.4	100.0	88	513	96.2	125.0	102	533
		HI–Hi Eff			88.7	100.0	93	513	100.5	125.0	107	533
	460–3–60	STD	0.3	3.1	43.1	50.0	45	252	49.3	60.0	52	264
		MED			45.7	60.0	48	256	51.9	60.0	55	268
		HIGH			44.7	60.0	47	257	50.9	60.0	54	269
		HI–Hi Eff			46.9	60.0	49	257	53.1	60.0	56	269
	575–3–60	STD	0.24	2.4	32.1	40.0	33	188	36.9	45.0	39	196
		MED			34.9	45.0	37	202	39.7	50.0	42	210
		HIGH			34.4	45.0	36	191	39.2	50.0	42	199
		HI–Hi Eff			36.9	45.0	39	200	41.7	50.0	44	208
24	208/230–3–60	STD	0.52	5.9	110.6	150.0	113	534	122.4	150.0	127	554
		MED			108.4	150.0	111	536	120.2	150.0	124	556
		HIGH			115.0	150.0	118	572	126.8	150.0	132	592
		MED–Hi Eff			112.7	150.0	116	536	124.5	150.0	129	556
		HI–Hi Eff			124.1	150.0	129	615	135.9	175.0	142	635
	460–3–60	STD	0.3	3.1	49.0	60.0	51	269	55.2	60.0	58	281
		MED			48.0	60.0	50	270	54.2	60.0	57	282
		HIGH			51.3	60.0	54	288	57.5	70.0	61	300
		MED–Hi Eff			50.2	60.0	52	270	56.4	70.0	59	282
		HI–Hi Eff			55.9	70.0	59	310	62.1	80.0	66	322
	575–3–60	STD	0.24	2.4	38.6	50.0	40	224	43.4	50.0	46	232
		MED			38.1	50.0	40	213	42.9	50.0	45	221
		HIGH			40.8	50.0	43	239	45.6	60.0	48	247
		MED–Hi Eff			40.6	50.0	42	222	45.4	60.0	48	230
		HI–Hi Eff			42.5	50.0	45	249	47.3	60.0	50	257

Table 33 – MCA/MOCP DETERMINATION NO C.O. OR UNPWRD C.O. **25 - 27.5 Tons**

UNIT	NOM. V–Ph–Hz	IFM	COMBUSTION FAN MOTOR	POWER EXHAUST	NO C.O. or UNPWR C.O.							
					NO P.E.				w/ P.E. (pwrd fr/ unit)			
		TYPE	FLA	FLA	MCA	MOCP	DISC. SIZE FLA	DISC. SIZE LRA	MCA	MOCP	DISC. SIZE FLA	DISC. SIZE LRA
28	208/230–3–60	STD	0.52	5.9	129.2	175.0	135	584	141.0	175.0	148	604
		MED			127.0	175.0	132	586	138.8	175.0	146	606
		HIGH			133.6	175.0	140	622	145.4	175.0	153	642
		MED–Hi Eff			131.3	175.0	137	586	143.1	175.0	151	606
		HI–Hi Eff			142.7	175.0	150	665	154.5	200.0	164	685
	460–3–60	STD	0.3	3.1	52.9	60.0	55	299	59.1	70.0	63	311
		MED			51.9	60.0	54	300	58.1	70.0	61	312
		HIGH			55.2	60.0	58	318	61.4	70.0	65	330
		MED–Hi Eff			54.1	60.0	57	300	60.3	70.0	64	312
		HI–Hi Eff			59.8	70.0	63	340	66.0	80.0	70	352
	575–3–60	STD	0.24	2.4	41.1	50.0	43	244	45.9	60.0	49	252
		MED			40.6	50.0	42	233	45.4	60.0	48	241
		HIGH			43.3	50.0	46	259	48.1	60.0	51	267
		MED–Hi Eff			43.1	50.0	45	242	47.9	60.0	51	250
		HI–Hi Eff			45.0	50.0	47	269	49.8	60.0	53	277
30	208/230–3–60	STD–Hi Eff	0.52	5.9	141.5	175.0	148	702	153.3	200.0	162	722
		MED–Hi Eff			152.9	200.0	161	781	164.7	200.0	175	801
		HI–Hi Eff			154.8	200.0	163	812	166.6	200.0	177	832
	460–3–60	STD–Hi Eff	0.3	3.1	66.0	80.0	69	354	72.2	90.0	76	366
		MED–Hi Eff			71.7	90.0	76	394	77.9	100.0	83	406
		HI–Hi Eff			72.6	90.0	77	409	78.8	100.0	84	421
	575–3–60	STD–Hi Eff	0.24	2.4	56.0	70.0	59	264	60.8	80.0	64	272
		MED–Hi Eff			57.9	70.0	61	291	62.7	80.0	66	299
		HI–Hi Eff			60.8	80.0	64	302	65.6	80.0	70	310

LEGEND:

C.O. – Convenient outlet
DISC – Disconnect
FLA – Full load amps
IFM – Indoor fan motor
LRA – Locked rotor amps
MCA – Minimum circuit amps
MOCP – Maximum over current protection
P.E. – Power exhaust
UNPWRD CO – Unpowered convenient outlet

NOTES:

1. In compliance with NEC requirements for multimotor and combination load equipment (refer to NEC Articles 430 and 440), the overcurrent protective device for the unit shall be fuse or HACR breaker. Canadian units may be fuse or circuit breaker.
2. **Unbalanced 3-Phase Supply Voltage**
   Never operate a motor where a phase imbalance in supply voltage is greater than 2%. Use the following formula to determine the percentage of voltage imbalance.

$$\% \text{ Voltage Imbalance} = 100 \times \frac{\text{max voltage deviation from average voltage}}{\text{average voltage}}$$

Example: Supply voltage is 230-3-60

AB = 224 v
BC = 231 v
AC = 226 v

$$\text{Average Voltage} = \frac{(224 + 231 + 226)}{3} = \frac{681}{3}$$

$$= 227$$

Determine maximum deviation from average voltage.
(AB) 227 – 224 = 3 v
(BC) 231 – 227 = 4 v
(AC) 227 – 226 = 1 v
Maximum deviation is 4 v.
Determine percent of voltage imbalance.

$$\% \text{ Voltage Imbalance} = 100 \times \frac{4}{227}$$

$$= 1.76\%$$

This amount of phase imbalance is satisfactory as it is below the maximum allowable 2%.

IMPORTANT: If the supply voltage phase imbalance is more than 2%, contact your local electric utility company immediately.

48TC

Table 34 – MCA/MOCP DETERMINATION W/ PWRD C.O. **17 - 20 Tons**

UNIT	NOM. V–Ph–Hz	IFM TYPE	COMBUSTION FAN MOTOR FLA	POWER EXHAUST FLA	w/ PWRD C.O.							
					NO P.E.				w/ P.E. (pwrd fr/ unit)			
					MCA	MOCP	DISC. SIZE		MCA	MOCP	DISC. SIZE	
							FLA	LRA			FLA	LRA
17	208/230–3–60	STD	0.52	5.9	83.9	100.0	88	490	95.7	125.0	101	510
		MED			86.6	100.0	91	507	98.4	125.0	105	527
		HIGH			91.4	100.0	96	516	103.2	125.0	110	536
	460–3–60	STD	0.3	3.1	43.9	60.0	46	245	50.1	60.0	53	257
		MED			45.3	60.0	47	254	51.5	60.0	54	266
		HIGH			47.9	60.0	50	258	54.1	60.0	57	270
	575–3–60	STD	0.24	2.4	33.8	45.0	35	190	38.6	50.0	41	198
		MED			33.8	45.0	35	190	38.6	50.0	41	198
		HIGH			36.6	45.0	39	204	41.4	50.0	44	212
20	208/230–3–60	STD	0.52	5.9	86.6	100.0	91	507	98.4	125.0	105	527
		MED			91.4	100.0	96	516	103.2	125.0	110	536
		HIGH			89.2	100.0	94	518	101.0	125.0	108	538
		HI–Hi Eff			93.5	110.0	99	518	105.3	125.0	112	538
	460–3–60	STD	0.3	3.1	45.3	60.0	47	254	51.5	60.0	54	266
		MED			47.9	60.0	50	258	54.1	60.0	57	270
		HIGH			46.9	60.0	49	259	53.1	60.0	56	271
		HI–Hi Eff			49.1	60.0	52	259	55.3	60.0	59	271
	575–3–60	STD	0.24	2.4	33.8	45.0	35	190	38.6	50.0	41	198
		MED			36.6	45.0	39	204	41.4	50.0	44	212
		HIGH			36.1	45.0	38	193	40.9	50.0	43	201
		HI–Hi Eff			38.6	50.0	41	202	43.4	50.0	46	210
24	208/230–3–60	STD	0.52	5.9	115.4	150.0	119	539	127.2	175.0	132	559
		MED			113.2	150.0	116	541	125.0	150.0	130	561
		HIGH			119.8	150.0	124	577	131.6	175.0	138	597
		MED–Hi Eff			117.5	150.0	121	541	129.3	175.0	135	561
		HI–Hi Eff			128.9	175.0	134	620	140.7	175.0	148	640
	460–3–60	STD	0.3	3.1	51.2	60.0	53	271	57.4	70.0	61	283
		MED			50.2	60.0	52	272	56.4	70.0	59	284
		HIGH			53.5	60.0	56	290	59.7	70.0	63	302
		MED–Hi Eff			52.4	60.0	55	272	58.6	70.0	62	284
		HI–Hi Eff			58.1	70.0	61	312	64.3	80.0	69	324
	575–3–60	STD	0.24	2.4	40.3	50.0	42	226	45.1	50.0	48	234
		MED			39.8	50.0	42	215	44.6	50.0	47	223
		HIGH			42.5	50.0	45	241	47.3	60.0	50	249
		MED–Hi Eff			42.3	50.0	44	224	47.1	60.0	50	232
		HI–Hi Eff			44.2	50.0	47	251	49.0	60.0	52	259

Table 35 – MCA/MOCP DETERMINATION W/ PWRD C.O. **25 - 27.5 Tons**

UNIT	NOM. V–Ph–Hz	IFM TYPE	COMBUSTION FAN MOTOR FLA	POWER EXHAUST FLA	w/ PWRD C.O.							
					NO P.E.				w/ P.E. (pwrd fr/ unit)			
					MCA	MOCP	DISC. SIZE		MCA	MOCP	DISC. SIZE	
							FLA	LRA			FLA	LRA
28	208/230–3–60	STD	0.52	5.9	134.0	175.0	140	589	145.8	175.0	154	609
		MED			131.8	175.0	138	591	143.6	175.0	151	611
		HIGH			138.4	175.0	145	627	150.2	175.0	159	647
		MED–Hi Eff			136.1	175.0	143	591	147.9	175.0	156	611
		HI–Hi Eff			147.5	175.0	156	670	159.3	200.0	169	690
	460–3–60	STD	0.3	3.1	55.1	60.0	58	301	61.3	70.0	65	313
		MED			54.1	60.0	57	302	60.3	70.0	64	314
		HIGH			57.4	70.0	61	320	63.6	80.0	68	332
		MED–Hi Eff			56.3	70.0	59	302	62.5	80.0	66	314
		HI–Hi Eff			62.0	80.0	66	342	68.2	80.0	73	354
	575–3–60	STD	0.24	2.4	42.8	50.0	45	246	47.6	60.0	50	254
		MED			42.3	50.0	44	235	47.1	60.0	50	243
		HIGH			45.0	50.0	47	261	49.8	60.0	53	269
		MED–Hi Eff			44.8	50.0	47	244	49.6	60.0	53	252
		HI–Hi Eff			46.7	60.0	49	271	51.5	60.0	55	279
30	208/230–3–60	STD–Hi Eff	0.52	5.9	146.3	175.0	154	707	158.1	200.0	167	727
		MED–Hi Eff			157.7	200.0	167	786	169.5	200.0	180	806
		HI–Hi Eff			159.6	200.0	169	817	171.4	200.0	182	837
	460–3–60	STD–Hi Eff	0.3	3.1	68.2	90.0	72	356	74.4	90.0	79	368
		MED–Hi Eff			73.9	90.0	78	396	80.1	100.0	85	408
		HI–Hi Eff			74.8	90.0	79	411	81.0	100.0	86	423
	575–3–60	STD–Hi Eff	0.24	2.4	57.7	70.0	61	266	62.5	80.0	66	274
		MED–Hi Eff			59.6	70.0	63	293	64.4	80.0	68	301
		HI–Hi Eff			62.5	80.0	66	304	67.3	80.0	72	312

LEGEND:

C.O. – Convenient outlet
DISC – Disconnect
FLA – Full load amps
IFM – Indoor fan motor
LRA – Locked rotor amps
MCA – Minimum circuit amps
MOCP – Maximum over current protection
P.E. – Power exhaust
UNPWRD CO – Unpowered convenient outlet

NOTES:

1. In compliance with NEC requirements for multimotor and combination load equipment (refer to NEC Articles 430 and 440), the overcurrent protective device for the unit shall be fuse or HACR breaker. Canadian units may be fuse or circuit breaker.
2. **Unbalanced 3-Phase Supply Voltage**
   Never operate a motor where a phase imbalance in supply voltage is greater than 2%. Use the following formula to determine the percentage of voltage imbalance.

$$\% \text{ Voltage Imbalance} = 100 \times \frac{\text{max voltage deviation from average voltage}}{\text{average voltage}}$$

Example: Supply voltage is 230-3-60

AB = 224 v
BC = 231 v
AC = 226 v

$$\text{Average Voltage} = \frac{(224 + 231 + 226)}{3} = \frac{681}{3}$$

$$= 227$$

Determine maximum deviation from average voltage.
(AB) 227 – 224 = 3 v
(BC) 231 – 227 = 4 v
(AC) 227 – 226 = 1 v
Maximum deviation is 4 v.
Determine percent of voltage imbalance.

$$\% \text{ Voltage Imbalance} = 100 \times \frac{4}{227}$$

$$= 1.76\%$$

This amount of phase imbalance is satisfactory as it is below the maximum allowable 2%.

IMPORTANT: If the supply voltage phase imbalance is more than 2%, contact your local electric utility company immediately.

48TC

TYPICAL WIRING DIAGRAMS

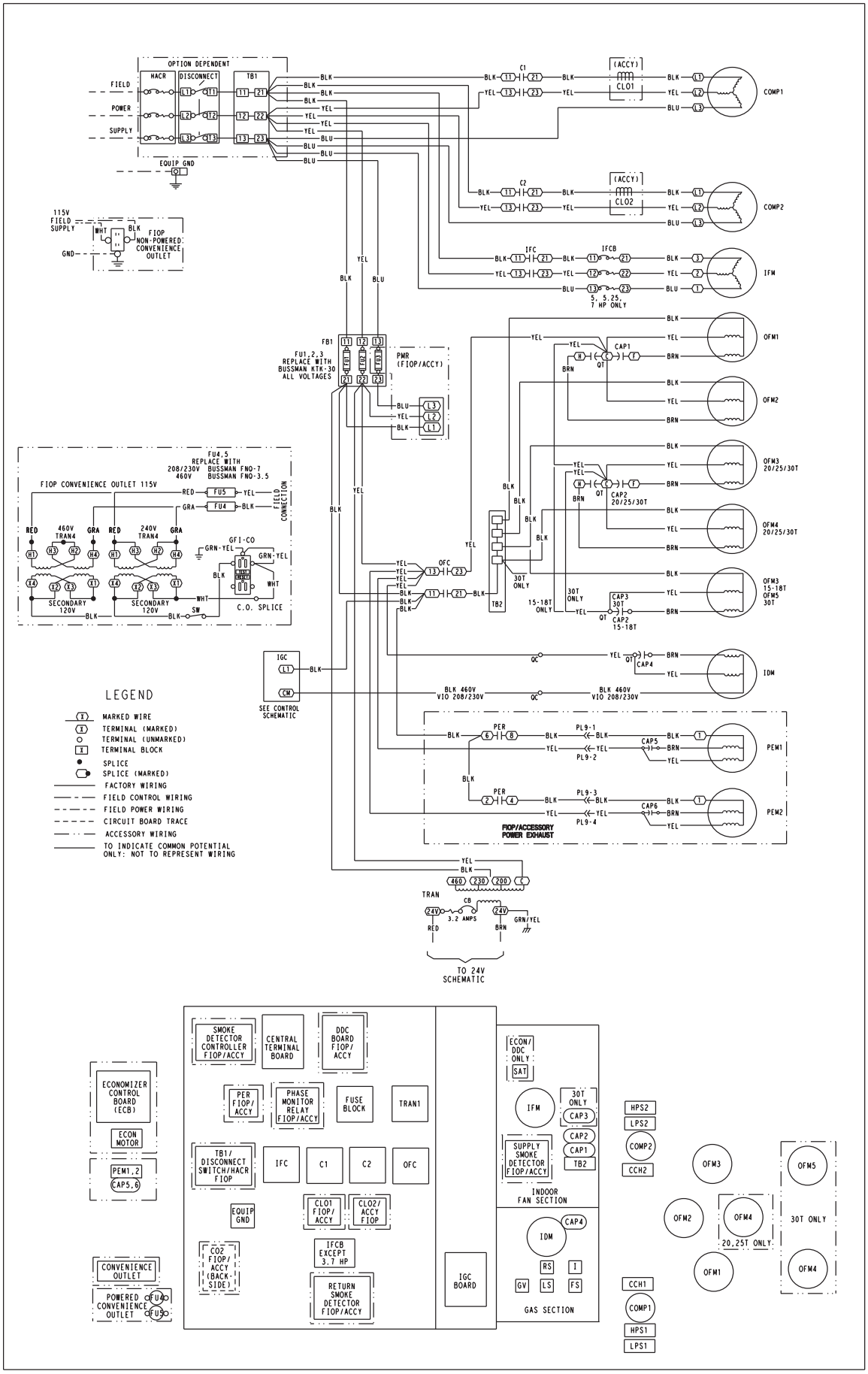

C09282

Fig. 15 - Typical Power Diagram (All Voltages)

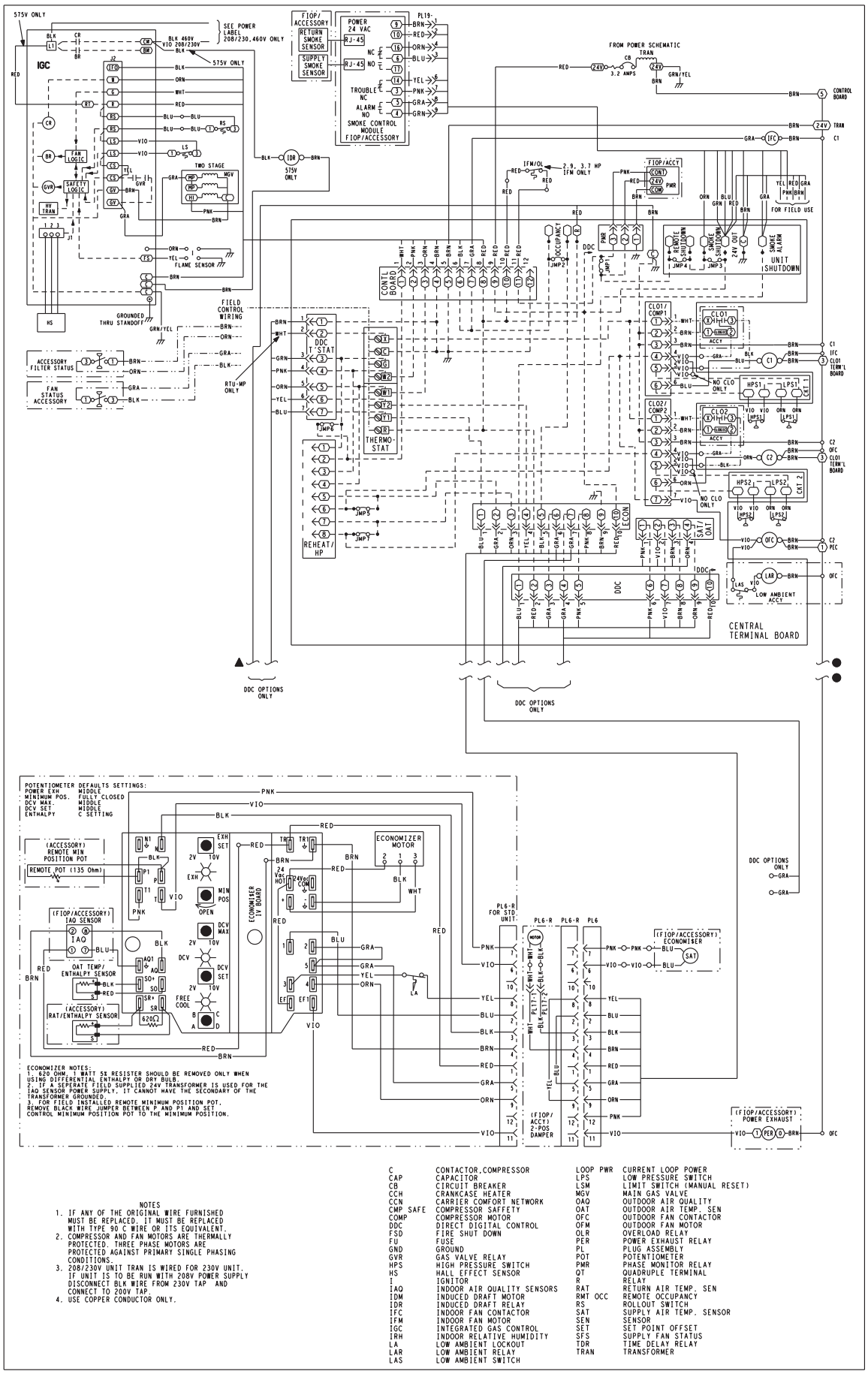

NOTES

1. IF ANY OF THE ORIGINAL WIRE FURNISHED MUST BE REPLACED, IT MUST BE REPLACED WITH TYPE 90 C WIRE OR ITS EQUIVALENT.
2. COMPRESSOR AND FAN MOTORS ARE THERMALLY PROTECTED. THREE PHASE MOTORS ARE PROTECTED AGAINST PRIMARY SINGLE PHASING CONDITIONS.
3. 208/230V UNIT TRAN IS WIRED FOR 230V UNIT. IF UNIT IS TO BE RUN WITH 208V POWER SUPPLY DISCONNECT BLK WIRE FROM 230V TAP AND CONNECT TO 200V TAP.
4. USE COPPER CONDUCTOR ONLY.

C	CONTACTOR,COMPRESSOR	LOOP PWR	CURRENT LOOP POWER
CAP	CAPACITOR	LPS	LOW PRESSURE SWITCH
CB	CIRCUIT BREAKER	LSM	LIMIT SWITCH (MANUAL RESET)
CCH	CRANKCASE HEATER	MGV	MAIN GAS VALVE
CCN	CARRIER COMFORT NETWORK	OAQ	OUTDOOR AIR QUALITY
CMP SAFE	COMPRESSOR SAFFETY	OAT	OUTDOOR AIR TEMP. SEN
COMP	COMPRESSOR MOTOR	OFC	OUTDOOR FAN CONTACTOR
DDC	DIRECT DIGITAL CONTROL	OFM	OUTDOOR FAN MOTOR
FSD	FIRE SHUT DOWN	OLR	OVERLOAD RELAY
FU	FUSE	PER	POWER EXHAUST RELAY
GND	GROUND	PL	PLUG ASSEMBLY
GVR	GAS VALVE RELAY	POT	POTENTIOMETER
HPS	HIGH PRESSURE SWITCH	PMR	PHASE MONITOR RELAY
HS	HALL EFFECT SENSOR	QT	QUADRUPLE TERMINAL
I	IGNITOR	R	RELAY
IAQ	INDOOR AIR QUALITY SENSORS	RAT	RETURN AIR TEMP. SEN
IDM	INDUCED DRAFT MOTOR	RMT OCC	REMOTE OCCUPANCY
IDR	INDUCED DRAFT RELAY	RS	ROLLOUT SWITCH
IFC	INDOOR FAN CONTACTOR	SAT	SUPPLY AIR TEMP. SENSOR
IFM	INDOOR FAN MOTOR	SEN	SENSOR
IGC	INTEGRATED GAS CONTROL	SET	SET POINT OFFSET
IRH	INDOOR RELATIVE HUMIDITY	SFS	SUPPLY FAN STATUS
LA	LOW AMBIENT LOCKOUT	TDR	TIME DELAY RELAY
LAR	LOW AMBIENT RELAY	TRAN	TRANSFORMER
LAS	LOW AMBIENT SWITCH		

C09281

Fig. 16 - Typical Control Diagram (All Voltages)

SEQUENCE OF OPERATION

General

The sequence below describes the sequence of operation for an electro-mechanical unit with and without a factory installed EconoMi$er™ IV (called "economizer" in this sequence). For information regarding a direct digital controller, see the start-up, operations, and troubleshooting manual for the applicable controller.

Electro-mechanical units with no economizer

Cooling —

When the thermostat calls for cooling, terminals G and Y1 are energized. As a result, the indoor-fan contactor (IFC) and the compressor contactor (C1) are energized, causing the indoor-an motor (IFM), compressor #1, and outdoor fan to start. If the unit has 2 stages of cooling, the thermostat will additionally energize Y2. The Y2 signal will energize compressor contactor #2 (C2), causing compressor #2 to start. Regardless of the number of stages, the outdoor-fan motor runs continuously while unit is cooling.

Heating —

NOTE: WeatherMaker (48TC) units have 2 stages of gas heat.

When the thermostat calls for heating, power is sent to W on the Integrated Gas Controller (IGC) board. An LED (light-emitting diode) on the IGC board turns on and remains on during normal operation. A check is made to ensure that the rollout switch and limit switch are closed. If the check was successful, the induced-draft motor is energized, and when its speed is satisfactory, as proven by the "hall effect" sensor, the ignition activation period begins. The burners will ignite within 5 seconds. If the burners do not light, there is a 22-second delay before another 5-second attempt. This sequence is repeated for 15 minutes or until the burners light. If, after the 15 minutes, the burners still have not lit, heating is locked out. To reset the control, break 24-v power to the thermostat.

When ignition occurs, the IGC board will continue to monitor the condition of the rollout switch, the limit switches, the "hall effect" sensor, as well as the flame sensor. Forty-five seconds after ignition occurs, assuming the unit is controlled through a room thermostat set for fan auto, the indoor-fan motor will energize (and the outdoor-air dampers will open to their minimum position). If, for some reason, the over-temperature limit opens prior to the start of the indoor fan blower, the unit will shorten the 45-second delay to 5 seconds less than the time from initiation of heat to when the limit tripped. Gas will not be interrupted to the burners and heating will continue. Once the fan-on delay has been modified, it will not change back to 45 seconds until power is reset to the control.

On units with 2 stages of heat, when additional heat is required, W2 closes and initiates power to the second stage of the main gas valve. When the thermostat is satisfied, W1 and W2 open and the gas valve closes, interrupting the flow of gas to the main burners.

If the call for W1 lasted less than 1 minute, the heating cycle will not terminate until 1 minute after W1 became active. If the unit is controlled through a room thermostat set for fan auto, the indoor-fan motor will continue to operate for an additional 45 seconds then stop. If the over-temperature limit opens after the indoor motor is stopped, but within 10 minutes of W1 becoming inactive, on the next cycle the time will be extended by 15 seconds. The maximum delay is 3 minutes. Once modified, the fan off delay will not change back to 45 seconds unless power is reset to the control. A LED indicator is provided on the IGC to monitor operation.

Electro-mechanical units with an economizer

Cooling —

When free cooling is not available, the compressors will be controlled by the zone thermostat. When free cooling is available, the outdoor-air damper is modulated by the EconoMi$er IV control to provide a 50°F (10°C) to 55°F (13°C) mixed-air temperature into the zone. As the mixed air temperature fluctuates above 55°F (13°C)or below 50°F (10°C) dampers will be modulated (open or close) to bring the mixed-air temperature back within control. If mechanical cooling is utilized with free cooling, the outdoor-air damper will maintain its current position at the time the compressor is started. If the increase in cooling capacity causes the mixed-air temperature to drop below 45°F (7°C), then the outdoor-air damper position will be decreased to the minimum position. If the mixed-air temperature continues to fall, the outdoor-air damper will close. Control returns to normal once the mixed-air temperature rises above 48°F (9°C). The power exhaust fans will be energized and de-energized, if installed, as the outdoor-air damper opens and closes.

If field-installed accessory CO_2 sensors are connected to the EconoMi$er IV control, a demand controlled ventilation strategy will begin to operate. As the CO_2 level in the zone increases above the CO_2 setpoint, the minimum position of the damper will be increased proportionally. As the CO_2 level decreases because of the increase in fresh air, the outdoor-air damper will be proportionally closed. For EconoMi$er IV operation, there must be a thermostat call for the fan (G). If the unit is occupied and the fan is on, the damper will operate at minimum position. Otherwise, the damper will be closed.

When the EconoMi$er IV control is in the occupied mode and a call for cooling exists (Y1 on the thermostat), the control will first check for indoor fan operation. If the fan is not on, then cooling will not be activated. If the fan is on, then the control will open the EconoMi$er IV damper to the minimum position.

On the initial power to the EconoMi$er IV control, it will take the damper up to 2-1/2 minutes before it begins to position itself. After the initial power-up, further changes in damper position can take up to 30 seconds to initiate. Damper movement from full closed to full open (or vice versa) will take between 1-1/2 and 2-1/2 minutes. If free cooling can be used as determined from the appropriate changeover command (switch, dry bulb, enthalpy curve, differential dry bulb, or differential enthalpy), then the control will modulate the dampers open to maintain the mixed-air temperature setpoint at 50°F (10°C) to 55°F (13°C). If there is a further demand for cooling (cooling second stage - Y2 is energized), then the control will bring on compressor stage 1 to maintain the mixed-air temperature setpoint. The EconoMi$er IV damper will be open at maximum position. EconoMi$er IV operation is limited to a single compressor.

Heating —

The sequence of operation for the heating is the same as an electromechanical unit with no economizer. The only difference is how the economizer acts. The economizer will stay at the Economizer Minimum Position while the evaporator fan is operating. The outdoor-air damper is closed when the indoor fan is not operating.

Refer to Service and Maintenance Manual for further details.

Optional Humidi-MiZer Dehumidification System

Units with the factory equipped Humidi-MiZer option are capable of providing multiple modes of improved dehumidification as a variation of the normal cooling cycle.

The Humidi-MiZer option includes additional valves in the liquid line and discharge line of each refrigerant circuit, a small reheat condenser coil downstream of the evaporator, and Motormaster variable-speed control of some or all outdoor fans. Operation of the revised refrigerant circuit for each mode is described below.

NOTE: x = refrigerant circuit A, B, or C.

Normal Cooling

Refrigerant flows from the outdoor condenser through the normally open Cooling Valve (CV.x) to the expansion device. Reheat1 Valve (RH1.x) and Reheat2 Valve (RH2.x) are closed.

Reheat1 (Subcooling Mode) - 48TC17-28

This mode increases latent cooling and decreases sensible cooling compared to normal cooling. Refrigerant flows from the outdoor condenser, through the normally open Reheat1 Valve (RH1.x), and through the reheat condenser coil to the expansion device. Cooling Valve (CV.x) and Reheat2 Valve (RH2.x) are closed.

Reheat2 (Hot Gas Reheat Mode) - 48TC17-28

This mode provides maximum latent cooling with little to no sensible capacity. This mode can operate to provide dehumidification when there is no cooling demand. Like Reheat1 mode, refrigerant flows from the outdoor condenser, through the normally open Reheat1 Valve (RH1.x), and through the reheat condenser coil to the expansion device. The Cooling Valve (CV.x) is closed. Reheat2 Valve (RH2.x) is open which provides some compressor discharge gas to the reheat condenser to further increase the reheat of the evaporator airstream.

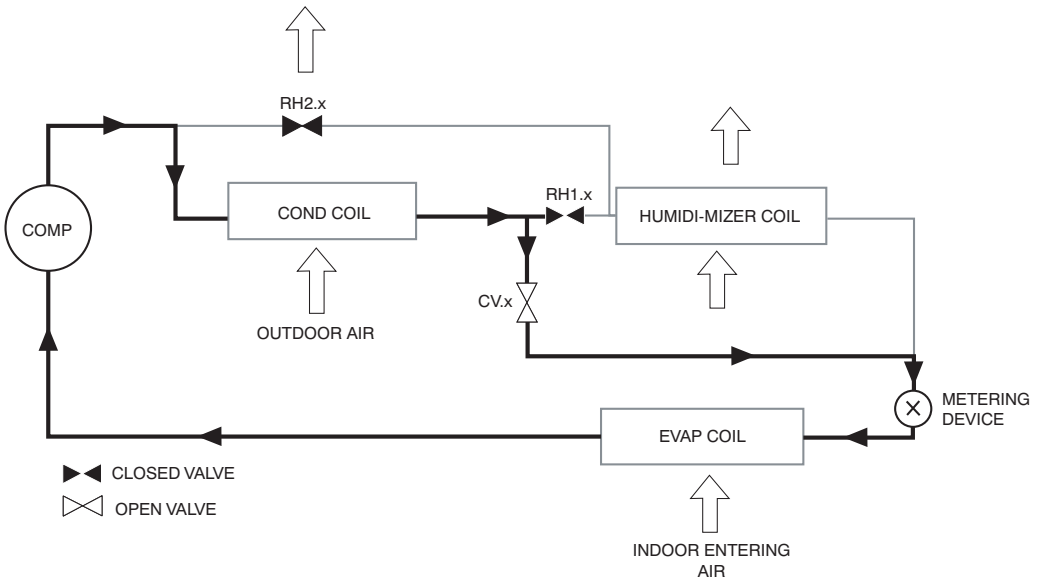

Normal Cooling Mode - Humidi-MiZer System (48TC17-28)

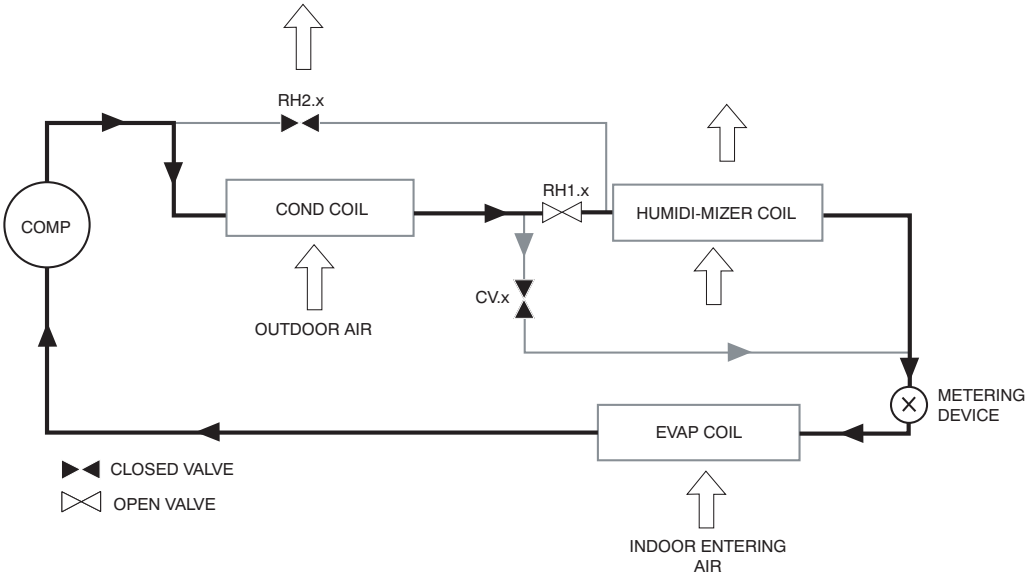

C07120

Subcooling Mode (Reheat 1) - Humidi-MiZer System (48TC17-28)

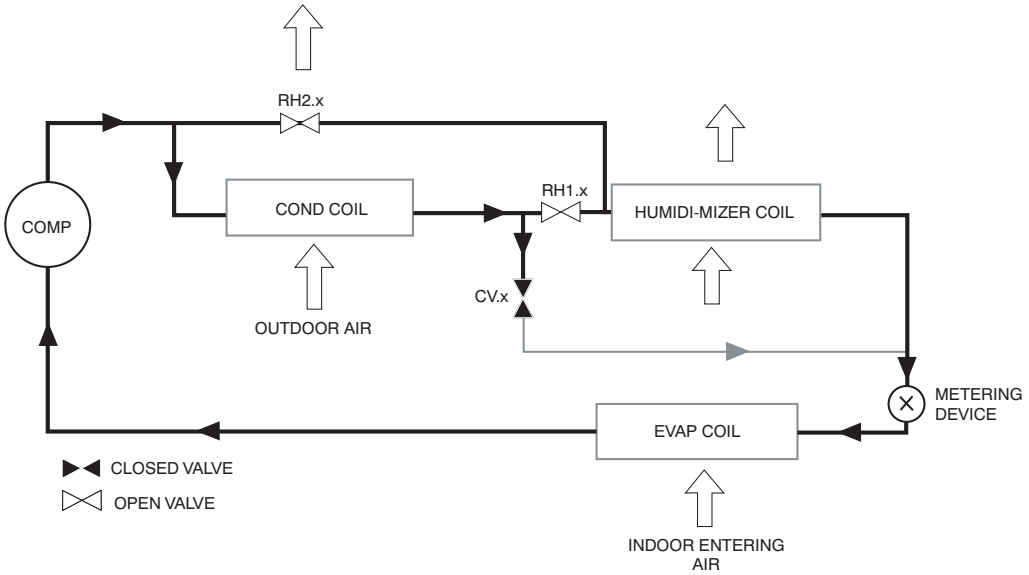

C07121

Hot Gas Reheat Mode (Reheat2) - Humidi-MiZer System (48TC17-28)

GUIDE SPECIFICATIONS - 48TC*D17-30

Note about this specification:

These specifications are written in “Masterformat” as published by the Construction Specification Institute. Please feel free to copy this specification directly into your building spec.

Gas Heat/Electric Cooling Packaged Rooftop

HVAC Guide Specifications

Size Range: **15 to 27.5 Nominal Tons**

Section **Description**

23 06 80 Schedules for Decentralized HVAC Equipment

23 06 80.13 Decentralized Unitary HVAC Equipment Schedule

23 06 80.13.A. Rooftop unit schedule

1. Schedule is per the project specification requirements.

23 07 16 HVAC Equipment Insulation

23 07 16.13 Decentralized, Rooftop Units:

23 07 16.13.A. Evaporator fan compartment:

1. Interior cabinet surfaces shall be insulated with a minimum 1/2-in. thick, minimum 1 1/2 lb density, flexible fiberglass insulation bonded with a phenolic binder, neoprene coated on the air side.
2. Insulation and adhesive shall meet NFPA 90A requirements for flame spread and smoke generation.

23 07 16.13.B. Gas heat compartment:

1. Aluminum foil-faced fiberglass insulation shall be used.
2. Insulation and adhesive shall meet NFPA 90A requirements for flame spread and smoke generation.

23 09 13 Instrumentation and Control Devices for HVAC

23 09 13.23 Sensors and Transmitters

23 09 13.23.A. Thermostats

1. Thermostat must
   a. energize both “W” and “G” when calling for heat.
   b. have capability to energize 2 different stages of cooling, and 2 different stages of heating.
   c. include capability for occupancy scheduling.

23 09 23 Direct-digital Control system for HVAC

23 09 23.13 Decentralized, Rooftop Units:

23 09 23.13.A. PremierLink controller

1. Shall be ASHRAE 62-2001 compliant.
2. Shall accept 18-32 VAC input power.
3. Shall have an operating temperature range from -40°F (-40°C) to 158°F (70°C), 10% - 95% RH (non-condensing).
4. Shall include an integrated economizer controller to support an economizer with 4 to 20 mA actuator input and no microprocessor controller.
5. Controller shall accept the following inputs: space temperature, setpoint adjustment, outdoor air temperature, indoor air quality, outdoor air quality, indoor relative humidity, compressor lock-out, fire shutdown, enthalpy, fan status, remote time clock/door switch.
6. Shall accept a CO_2 sensor in the conditioned space, and be Demand Control Ventilation (DCV) ready.
7. Shall provide the following outputs: economizer, fan, cooling stage 1, cooling stage 2, heat stage 1, heat stage 2, heat stage 3/ exhaust/ reversing valve/ dehumidify/ occupied.
8. Unit shall provide surge protection for the controller through a circuit breaker.
9. Shall be Internet capable, and communicate at a Baud rate of 38.4K or faster
10. Shall have an LED display independently showing the status of activity on the communication bus, and processor operation.

11. Shall include an EIA-485 protocol communication port, an access port for connection of either a computer or a Carrier technician tool, an EIA-485 port for network communication to intelligent space sensors and displays, and a port to connect an optional LonWorks plug-in communications card.
12. Shall have built-in Carrier Comfort Network (CCN) protocol, and be compatible with other CCN devices, including ComfortVIEW controllers.
13. Shall have built-in support for Carrier technician tool.
14. Software upgrades will be accomplished by local download. Software upgrades through chip replacements are not allowed.
15. Shall be shock resistant in all planes to 5G peak, 11ms during operation, and 100G peak, 11ms during storage.
16. Shall be vibration resistant in all planes to 1.5G @ 20-300 Hz.
17. Shall support a bus length of 4000 ft (1219m) max, 60 devices per 1000 ft (305m) section, and 1 RS-485 repeater per 1000 ft (305m) sections.

23 09 23.13.B. RTU Open protocol, direct digital controller:

1. Shall be ASHRAE 62-2001 compliant.
2. Shall accept 18-30VAC, 50-60Hz, and consumer 15VA or less power.
3. Shall have an operating temperature range from -40°F (-40°C) to 130°F (54°C), 10% - 90% RH (non-condensing).
4. Shall include built-in protocol for BACNET (MS/TP and PTP modes), Modbus (RTU and ASCII), Johnson N2 and LonWorks. LonWorks Echelon processor required for all Lon applications shall be contained in separate communication board.
5. Shall allow access of up to 62 network variables (SNVT). Shall be compatible with all open controllers
6. Baud rate Controller shall be selectable using a dipswitch.
7. Shall have an LED display independently showing the status of serial communication, running, errors, power, all digital outputs, and all analog inputs.
8. Shall accept the following inputs: space temperature, setpoint adjustment, outdoor air temperature, indoor air quality, outdoor air quality, compressor lock-out, fire shutdown, enthalpy switch, and fan status/filter status/ humidity/ remote occupancy.
9. Shall provide the following outputs: economizer, fan, cooling stage 1, cooling stage 2, heat stage 1, heat stage 2, heat stage 3/ exhaust/ reversing valve.
10. Shall have built-in surge protection circuitry through solid state polyswitches. Polyswitches shall be used on incoming power and network connections. Polyswitches will return to normal when the “trip” condition clears.
11. Shall have a battery back-up capable of a minimum of 10,000 hours of data and time clock retention during power outages.
12. Shall have built-in support for Carrier technician tool.
13. Shall include an EIA-485 protocol communication port, an access port for connection of either a computer or a Carrier technician tool, an EIA-485 port for network communication to intelligent space sensors and displays, and a port to connect an optional LonWorks communications card.
14. Software upgrades will be accomplished by either local or remote download. No software upgrades through chip replacements are allowed.

23 09 33 Electric and Electronic Control System for HVAC

23 09 33.13 Decentralized, Rooftop Units:

23 09 33.13.A. General:

1. Shall be complete with self-contained low-voltage control circuit protected by a resettable circuit breaker on the 24-v transformer side. Transformer shall have 75VA capability.
2. Shall utilize color-coded wiring.
3. Shall include a central control terminal board to conveniently and safely provide connection points for vital control functions such as: smoke detectors, phase monitor, gas controller, economizer, thermostat, DDC control options, and low and high pressure switches.
4. The heat exchanger shall be controlled by an integrated gas controller (IGC) microprocessor. See heat exchanger section of this specification.
5. Unit shall include a minimum of one 8-pin screw terminal connection board for connection of control wiring.

23 09 33.23.B. Safeties:

1. Compressor over-temperature, over-current. High internal pressure differential.
2. Low-pressure switch.
   a. Units shall have different sized connectors for the circuit 1 and circuit 2 low and high pressure switches. They shall physically prevent the cross-wiring of the safety switches between circuits 1 and 2.

b. Low pressure switch shall use different color wire than the high pressure switch. The purpose is to assist the installer and service technician to correctly wire and or troubleshoot the rooftop unit.

3. High-pressure switch.
   a. Units shall have different sized connectors for the circuit 1 and circuit 2 low and high pressure switches. They shall physically prevent the cross-wiring of the safety switches between circuits 1 and 2.
   b. High pressure switch shall use different color wire than the low pressure switch. The purpose is to assist the installer and service technician to correctly wire and or troubleshoot the rooftop unit.
4. Automatic reset, motor thermal overload protector.
5. Heating section shall be provided with the following minimum protections:
   a. High-temperature limit switches.
   b. Induced draft motor speed sensor.
   c. Flame rollout switch.
   d. Flame proving controls.

23 09 93 Sequence of Operations for HVAC Controls

23 09 93.13 Decentralized, Rooftop Units:

23 09 93.13 INSERT SEQUENCE OF OPERATION

23 40 13 Panel Air Filters

23 40 13.13 Decentralized, Rooftop Units:

23 40 13.13.A. Standard filter section

1. Shall consist of factory-installed, low velocity, disposable 2-in. thick fiberglass filters of commercially available sizes.
2. Unit shall use only one filter size. Multiple sizes are not acceptable.
3. Filters shall be accessible through a dedicated, weather tight access panel.
4. 4-in filter capabilities shall be capable with pre-engineered and approved Carrier filter track field installed accessory. This kit requires field furnished filters.

23 81 19 Self-Contained Air Conditioners

23 81 19.13 Medium-Capacity Self-Contained Air Conditioners (48TC*D17-30)

23 81 19.13.A. General

1. Outdoor, rooftop mounted, electrically controlled, heating and cooling unit utilizing a fully hermetic scroll compressor(s) for cooling duty and gas combustion for heating duty.
2. Factory assembled, single-piece heating and cooling rooftop unit. Contained within the unit enclosure shall be all factory wiring, piping, controls, and special features required prior to field start-up.
3. Unit shall use environmentally sound, Puron refrigerant.
4. Unit shall be installed in accordance with the manufacturer's instructions.
5. Unit must be selected and installed in compliance with local, state, and federal codes.

23 81 19.13.B. Quality Assurance

1. Unit meets ASHRAE 90.1 minimum efficiency requirements.
2. Units are Energy Star certified where sizes are required.
3. Unit shall be rated in accordance with AHRI Standard 340/360.
4. Unit shall be designed to conform to ASHRAE 15.
5. Unit shall be UL-tested and certified in accordance with ANSI Z21.47 Standards and UL-listed and certified under Canadian standards as a total package for safety requirements.
6. Insulation and adhesive shall meet NFPA 90A requirements for flame spread and smoke generation.
7. Unit casing shall be capable of withstanding 500-hour salt spray exposure per ASTM B117 (scribed specimen).
8. Unit casing shall be capable of withstanding Federal Test Method Standard No. 141 (Method 6061) 5000-hour salt spray.
9. Unit shall be designed and manufactured in accordance with ISO 9001.
10. Roof curb shall be designed to conform to NRCA Standards.
11. Unit shall be subjected to a completely automated run test on the assembly line. The data for each unit will be stored at the factory, and must be available upon request.
12. Unit shall be designed in accordance with UL Standard 1995, including tested to withstand rain.
13. Unit shall be constructed to prevent intrusion of snow and tested to prevent snow intrusion into the control box up to 40 mph.

14. Unit shake tested to assurance level 1, ASTM D4169 to ensure shipping reliability.
15. High Efficient Motors listed shall meet section 313 of the Energy Independence and Security Act of 2007 (EISA 2007).

23 81 19.13.C. Delivery, Storage, and Handling

1. Unit shall be stored and handled per manufacturer's recommendations.
2. Lifted by crane requires either shipping top panel or spreader bars.
3. Unit shall only be stored or positioned in the upright position.

23 81 19.13.E. Project Conditions

1. As specified in the contract.

23 81 19.13.F. Operating Characteristics

1. Unit shall be capable of starting and running at 115°F (46°C) ambient outdoor temperature, meeting maximum load criteria of AHRI Standard 340/360 at ± 10% voltage.
2. Compressor with standard controls shall be capable of operation down to 30°F (-1°C), ambient outdoor temperatures. Accessory winter start kit is necessary if mechanically cooling at ambient temperatures below 30°F (-1°C).
3. Unit shall discharge supply air vertically or horizontally as shown on contract drawings.
4. Unit shall be factory configured and ordered for vertical supply & return configurations.
5. Unit shall be factory furnished for either vertical or horizontal configuration without the use of special conversion kits. No field conversion is possible.

23 81 19.13.G. Electrical Requirements

1. Main power supply voltage, phase, and frequency must match those required by the manufacturer.

23 81 19.13.H. Unit Cabinet

1. Unit cabinet shall be constructed of galvanized steel, and shall be bonderized and coated with a pre-painted baked enamel finish on all externally exposed surfaces.
2. Unit cabinet exterior paint shall be: film thickness, (dry) 0.003 inches minimum, gloss (per ASTM D523, 60°F / 16°C): 60, Hardness: H-2H Pencil hardness.
3. Evaporator fan compartment interior cabinet insulation shall conform to AHRI Standard 340/360 minimum exterior sweat criteria. Interior surfaces shall be insulated with a minimum 1/2-in. thick, 1 lb density, flexible fiberglass insulation, neoprene coated on the air side. Aluminum foil-faced fiberglass insulation shall be used in the gas heat compartment.
4. Base of unit shall have a minimum of four locations for thru-the-base gas and electrical connections standard. Both gas and electric connections shall be internal to the cabinet to protect from environmental issues.
5. Base Rail
   a. Unit shall have base rails on a minimum of 2 sides.
   b. Holes shall be provided in the base rails for rigging shackles to facilitate maneuvering and overhead rigging.
   c. Holes shall be provided in the base rail for moving the rooftop by fork truck.
   d. Base rail shall be a minimum of 16 gauge thickness.
6. Condensate pan and connections:
   a. Shall be a sloped condensate drain pan made of a non-corrosive material.
   b. Shall comply with ASHRAE Standard 62.
   c. Shall use a 3/4-in -14 NPT drain connection, through the side of the drain pan. Connection shall be made per manufacturer's recommendations.
7. Top panel:
   a. Shall be a multi-piece top panel linked with water tight flanges and locking systems.
8. Gas Connections:
   a. All gas piping connecting to unit gas valve shall enter the unit cabinet at a single location on side of unit (horizontal plane).
   b. Thru-the-base capability
      (1.) Standard unit shall have a thru-the-base gas-line location using a raised, embossed portion of the unit basepan.
      (2.) Optional, factory-approved, water-tight connection method must be used for thru-the-base gas connections.
      (3.) No basepan penetration, other than those authorized by the manufacturer, is permitted.
9. Electrical Connections
   a. All unit power wiring shall enter unit cabinet at a single, factory-prepared, knockout location.
   b. Thru-the-base capability.

(1.) Standard unit shall have a thru-the-base electrical location(s) using a raised, embossed portion of the unit basepan.

(2.) Optional, factory-approved, water-tight connection method must be used for thru-the-base electrical connections.

(3.) No basepan penetration, other than those authorized by the manufacturer, is permitted.

10. Component access panels (standard)
    a. Cabinet panels shall be easily removable for servicing.
    b. Unit shall have one factory installed, tool-less, removable, filter access panel.
    c. Panels covering control box and filter shall have molded composite handles while the blower access door shall have an integrated flange for easy removal.
    d. Handles shall be UV modified, composite. They shall be permanently attached, and recessed into the panel.
    e. Screws on the vertical portion of all removable access panel shall engage into heat resistant, molded composite collars.
    f. Collars shall be removable and easily replaceable using manufacturer recommended parts.

23 81 19.13.I. Gas Heat

1. General
    a. Heat exchanger shall be an induced draft design. Positive pressure heat exchanger designs shall not be allowed.
    b. Shall incorporate a direct-spark ignition system and redundant main gas valve.
    c. Gas supply pressure at the inlet to the rooftop unit gas valve must match that required by the manufacturer.
2. The heat exchanger shall be controlled by an integrated gas controller (IGC) microprocessor.
    a. IGC board shall notify users of fault using an LED (light-emitting diode).
    b. The LED shall be visible without removing the control box access panel.
    c. IGC board shall contain algorithms that modify evaporator-fan operation to prevent future cycling on high temperature limit switch.
    d. Unit shall be equipped with anti-cycle protection with one short cycle on unit flame rollout switch or 4 continuous short cycles on the high temperature limit switch. Fault indication shall be made using an LED.
3. Standard Heat Exchanger construction
    a. Heat exchanger shall be of the tubular-section type constructed of a minimum of 20-gauge steel coated with a nominal 1.2 mil aluminum-silicone alloy for corrosion resistance.
    b. Burners shall be of the in-shot type constructed of aluminum-coated steel.
    c. Burners shall incorporate orifices for rated heat output up to 2000 ft (610m) elevation. Additional accessory kits may be required for applications above 2000 ft (610m) elevation, depending on local gas supply conditions.
    d. Each heat exchanger tube shall contain multiple dimples for increased heating effectiveness.
4. Optional Stainless Steel Heat Exchanger construction
    a. Use energy saving, direct-spark ignition system.
    b. Use a redundant main gas valve.
    c. Burners shall be of the in-shot type constructed of aluminum-coated steel.
    d. All gas piping shall enter the unit cabinet at a single location on side of unit (horizontal plane).
    e. The optional stainless steel heat exchanger shall be of the tubular-section type, constructed of a minimum of 20-gauge type 409 stainless steel.
    f. Type 409 stainless steel shall be used in heat exchanger tubes and vestibule plate.
    g. Complete stainless steel heat exchanger allows for greater application flexibility.
5. Induced draft combustion motor and blower
    a. Shall be a direct-drive, single inlet, forward-curved centrifugal type.
    b. Shall be made from steel with a corrosion-resistant finish.
    c. Shall have permanently lubricated sealed bearings.
    d. Shall have inherent thermal overload protection.
    e. Shall have an automatic reset feature.

23 81 19.13.J. Coils

1. Standard Aluminum Fin - Copper Tube Coils:
    a. Standard evaporator and condenser coils shall have aluminum lanced plate fins mechanically bonded to seamless internally grooved copper tubes with all joints brazed.

b. Evaporator coils shall be leak tested to 150 psig, pressure tested to 450 psig, and qualified to UL 1995 burst test at 1775 psig.

c. Condenser coils shall be leak tested to 150 psig, pressure tested to 650 psig, and qualified to UL 1995 burst test at 1980 psig.

2. Optional Pre-coated aluminum-fin condenser coils:

a. Shall have a durable epoxy-phenolic coating to provide protection in mildly corrosive coastal environments.

b. Coating shall be applied to the aluminum fin stock prior to the fin stamping process to create an inert barrier between the aluminum fin and copper tube.

c. Epoxy-phenolic barrier shall minimize galvanic action between dissimilar metals.

3. Optional Copper-fin evaporator and condenser coils:

a. Shall be constructed of copper fins mechanically bonded to copper tubes and copper tube sheets.

b. Galvanized steel tube sheets shall not be acceptable.

c. A polymer strip shall prevent coil assembly from contacting the sheet metal coil pan to minimize potential for galvanic corrosion between coil and pan.

4. Optional E-coated aluminum-fin evaporator and condenser coils:

a. Shall have a flexible epoxy polymer coating uniformly applied to all coil surface areas without material bridging between fins.

b. Coating process shall ensure complete coil encapsulation of tubes, fins and headers.

c. Color shall be high gloss black with gloss per ASTM D523-89.

d. Uniform dry film thickness from 0.8 to 1.2 mil on all surface areas including fin edges.

e. Superior hardness characteristics of 2H per ASTM D3363-92A and cross-hatch adhesion of 4B-5B per ASTM D3359-93.

f. Impact resistance shall be up to 160 in.-lb (ASTM D2794-93).

g. Humidity and water immersion resistance shall be up to minimum 1000 and 250 hours respectively (ASTM D2247-92 and ASTM D870-92).

h. Corrosion durability shall be confirmed through testing to be no less than 1000 hours salt spray per ASTM B117-90.

5. Standard All Aluminum Novation Coils:

a. Standard condenser coils shall have all aluminum NOVATION Heat Exchanger Technology design consisting of aluminum multi port flat tube design and aluminum fin. Coils shall be a furnace brazed design and contain epoxy lined shrink wrap on all aluminum to copper connections.

b. Condenser coils shall be leak tested to 150 psig, pressure tested to 650 psig, and qualified to UL 1995 burst test at 1980 psig.

6. Optional E-coated aluminum-fin, aluminum tube condenser coils:

a. Shall have a flexible epoxy polymer coating uniformly applied to all coil external surface areas without material bridging between fins or louvers.

b. Coating process shall ensure complete coil encapsulation, including all exposed fin edges.

c. E-coat thickness of 0.8 to 1.2 mil with top coat having a uniform dry film thickness from 1.0 to 2.0 mil on all external coil surface areas, including fin edges, shall be provided.

d. Shall have superior hardness characteristics of 2H per ASTM D3363-00 and cross-hatch adhesion of 4B-5B per ASTM D3359-02.

e. Shall have superior impact resistance with no cracking, chipping or peeling per NSF/ANSI 51-2002 Method 10.2.

23 81 19.13.K. Refrigerant Components

1. Refrigerant circuit shall include the following control, safety, and maintenance features:

a. Fixed orifice metering system shall prevent mal-distribution of two-phase refrigerant by including multiple fixed orifice devices in each refrigeration circuit. Each orifice is to be optimized to the coil circuit it serves.

b. Refrigerant filter drier - Solid core design.

c. Service gauge connections on suction and discharge lines.

d. Pressure gauge access through a specially designed access screen on the side of the unit.

2. Compressors

a. Unit shall use fully hermetic, scroll compressor for each independent refrigeration circuit.

b. Models shall be available with 2 compressor/2 stage cooling.

c. Compressor motors shall be cooled by refrigerant gas passing through motor windings.

d. Compressors shall be internally protected from high discharge temperature conditions.

e. Compressors shall be protected from an over-temperature and over-amperage conditions by an internal, motor overload device.

f. Compressor shall be factory mounted on rubber grommets.

g. Compressor motors shall have internal line break thermal, current overload and high pressure differential protection.

h. Crankcase heaters shall not be required for normal operating range, unless provided by the factory.

23 81 19.13.L. Filter Section

1. Filters access is specified in the unit cabinet section of this specification.
2. Filters shall be held in place by a preformed, slide-out filter tray, facilitating easy removal and installation.
3. Shall consist of factory-installed, low velocity, throw-away 2-in. thick fiberglass filters.
4. Filters shall be standard, commercially available sizes.
5. Only one size filter per unit is allowed.
6. 4-in filter capability is possible with a field installed pre engineered slide out filter track accessory. 4-in filters are field furnished.

23 81 19.13.M. Evaporator Fan and Motor

1. Evaporator fan motor:
   a. Shall have inherent automatic-reset thermal overload protection or circuit breaker.
   b. Shall have a maximum continuous bhp rating for continuous duty operation; no safety factors above that rating shall be required.
2. Belt-driven Evaporator Fan:
   a. Belt drive shall include an adjustable-pitch motor pulley and belt break protection system.
   b. Shall use rigid pillow block bearing system with lubricant fittings at accessible bearing or lubrication line.
   c. Blower fan shall be double-inlet type with forward-curved blades.
   d. Shall be constructed from steel with a corrosion resistant finish and dynamically balanced.
   e. Standard on all 17-28 Humidi-MiZer models with round tube plate fin.

23 81 19.13.N. Condenser Fans and Motors

1. Condenser fan motors:
   a. Shall be a totally enclosed motor.
   b. Shall use permanently lubricated bearings.
   c. Shall have inherent thermal overload protection with an automatic reset feature.
   d. Shall use a shaft-down design.
2. Condenser Fans:
   a. Shall be a direct-driven propeller type fan.
   b. Shall have aluminum blades riveted to corrosion-resistant steel spiders and shall be dynamically balanced.

23 81 19.13.O. Special Features Options and Accessories

1. Integrated Economizers:
   a. Integrated, gear-driven opposing blade design type capable of simultaneous economizer and compressor operation.
   b. Independent modules for vertical or horizontal return configurations shall be available. Vertical and horizontal return modules shall be available as a factory installed option.
   c. Damper blades shall be galvanized steel with composite gears. Plastic or composite blades on intake or return shall not be acceptable.
   d. Shall include all hardware and controls to provide free cooling with outdoor air when temperature and/or humidity are below setpoints.
   e. Shall be equipped with gear driven dampers for both the outdoor ventilation air and the return air for positive air stream control.
   f. Shall be equipped with low-leakage dampers, not to exceed 2% leakage at 1 in. wg pressure differential.
   g. Shall be capable of introducing up to 100% outdoor air.
   h. Shall be equipped with a barometric relief damper capable of relieving up to 100% return air.
   i. Shall be designed to close damper(s) during loss-of-power situations with spring return built into motor.
   j. Dry bulb outdoor-air temperature sensor shall be provided as standard. Outdoor air sensor setpoint shall be adjustable and shall range from 40 to 100°F / 4 to 38°C. Additional sensor options shall be available as accessories.
   k. The economizer controller shall also provide control of an accessory power exhaust unit. function. Factory set at 100%, with a range of 0% to 100%.

l. The economizer shall maintain minimum airflow into the building during occupied period and provide design ventilation rate for full occupancy. A remote potentiometer may be used to override the damper setpoint.

m. Dampers shall be completely closed when the unit is in the unoccupied mode.

n. Economizer controller shall accept a 2-10Vdc CO_2 sensor input for IAQ/DCV control. In this mode, dampers shall modulate the outdoor-air damper to provide ventilation based on the sensor input.

o. Compressor lockout sensor shall open at 35°F (2°C) and close closes at 50°F (10°C).

p. Actuator shall be direct coupled to economizer gear. No linkage arms or control rods shall be acceptable.

q. Economizer controller shall provide indications when in free cooling mode, in the DCV mode, or the exhaust fan contact is closed.

2. Two-Position Motorized Damper

a. Damper shall be a Two-Position Damper. Damper travel shall be from the full closed position to the field adjustable %-open setpoint.

b. Damper shall include adjustable damper travel from 25% to 100% (full open).

c. Damper shall include single or dual blade, gear driven dampers and actuator motor.

d. Actuator shall be direct coupled to damper gear. No linkage arms or control rods shall be acceptable.

e. Damper will admit up to 100% outdoor air for applicable rooftop units.

f. Damper shall close upon indoor (evaporator) fan shutoff and/or loss of power.

g. The damper actuator shall plug into the rooftop unit's wiring harness plug. No hard wiring shall be required.

h. Outside air hood shall include aluminum water entrainment filter.

3. Manual damper

a. Manual damper package shall consist of damper, air inlet screen, and rain hood which can be preset to admit up to 25% outdoor air for year round ventilation.

4. Humidi-MiZer Adaptive Dehumidification System (17-28 sizes only):

a. The Humidi-MiZer Adaptive Dehumidification System shall be factory installed and shall provide greater dehumidification of the occupied space by two modes of dehumidification operations in addition to its normal design cooling mode:

(1.) Subcooling mode further sub cools the hot liquid refrigerant leaving the condenser coil when both temperature and humidity in the space are not satisfied.

(2.) Hot gas reheat mode shall mix a portion of the hot gas from the discharge of the compressor with the hot liquid refrigerant leaving the condenser coil to create a two-phase heat transfer in the system, resulting in a neutral leaving air temperature when only humidity in the space is not satisfied.

(3.) Includes head pressure controller.

5. Head Pressure Control Package

a. Controller shall control coil head pressure by condenser-fan speed modulation or condenser-fan cycling and wind baffles.

b. Shall consist of solid-state control and condenser-coil temperature sensor to maintain condensing temperature between 90°F (32°C) and 110°F (43°C) at outdoor ambient temperatures down to -20°F (-29°C).

6. Propane Conversion Kit

a. Package shall contain all the necessary hardware and instructions to convert a standard natural gas unit for use with liquefied propane. Kits shall be available for elevations from 0 up to 14,000 ft (4,276m).

7. Condenser Coil Hail Guard Assembly

a. Shall protect against damage from hail.

b. Shall be louvered style design.

8. Unit-Mounted, Non-Fused Disconnect Switch:

a. Switch shall be factory-installed, internally mounted.

b. National Electric Code (NEC) and UL approved non-fused switch shall provide unit power shutoff.

c. Shall be accessible from outside the unit.

d. Shall provide local shutdown and lockout capability.

9. Convenience Outlet:

a. Powered convenience outlet.

(1.) Outlet shall be powered from main line power to the rooftop unit.

(2.) Outlet shall be powered from line side of disconnect by installing contractor, as required by code. If outlet is powered from load side of disconnect, unit electrical ratings shall be UL certified and rated for additional outlet amperage.

(3.) Outlet shall be factory-installed and internally mounted with easily accessible 115-v female receptacle.

(4.) Outlet shall include 15 amp GFI receptacles with independent fuse protection.

(5.) Voltage required to operate convenience outlet shall be provided by a factory-installed step-down transformer.

(6.) Outlet shall be accessible from outside the unit.

b. Non-Powered convenience outlet.

(1.) Outlet shall be powered from a separate 115/120v power source.

(2.) A transformer shall not be included.

(3.) Outlet shall be factory-installed and internally mounted with easily accessible 115-v female receptacle.

(4.) Outlet shall include 15 amp GFI receptacles with independent fuse protection.

(5.) Outlet shall be accessible from outside the unit.

10. Flue Discharge Deflector:

a. Flue discharge deflector shall direct unit exhaust vertically instead of horizontally.

b. Deflector shall be defined as a "natural draft" device by the National Fuel and Gas (NFG) code.

11. Centrifugal Power Exhaust:

a. Power exhaust shall be used in conjunction with an integrated economizer.

b. Independent modules for vertical or horizontal return configurations shall be available.

c. Horizontal power exhaust is shall be mounted in return ductwork.

d. Power exhaust shall be controlled by economizer controller operation. Exhaust fans shall be energized when dampers open past the 0-100% adjustable setpoint on the economizer control.

12. Roof Curbs (Vertical):

a. Full perimeter roof curb with exhaust capability providing separate air streams for energy recovery from the exhaust air without supply air contamination.

b. Formed galvanized steel with wood nailer strip and shall be capable of supporting entire unit weight.

c. Permits installation and securing of ductwork to curb prior to mounting unit on the curb.

13. Adapter Curb (Vertical):

a. Full perimeter – fully assembled and welded roof curb with exhaust capability providing separate air streams for energy recovery from the exhaust air without supply air contamination.

b. Formed galvanized steel with wood nailer strip and shall be capable of supporting entire unit weight.

c. Permits installation of new 48TC17-28 models to past Carrier design curb models: DP, DR, HJ, TM, and TJ. (Not for 48TJE024-028 models.) Check with Carrier sales expert of further details and information.

14. High Altitude Gas Conversion Kit:

a. Package shall contain all the necessary hardware and instructions to convert a standard natural gas unit to operate from 3,000-10,000 ft (914 to 3048m) elevation and 10,001-14,000 ft (3049-4267m) elevation.

15. Outdoor Air Enthalpy Sensor:

a. The outdoor air enthalpy sensor shall be used to provide single enthalpy control. When used in conjunction with a return air enthalpy sensor, the unit will provide differential enthalpy control. The sensor allows the unit to determine if outside air is suitable for free cooling.

16. Return Air Enthalpy Sensor:

a. The return air enthalpy sensor shall be used in conjunction with an outdoor air enthalpy sensor to provide differential enthalpy control.

17. Indoor Air Quality (CO_2) Sensor:

a. Shall be able to provide demand ventilation indoor air quality (IAQ) control.

b. The IAQ sensor shall be available in duct mount, wall mount, or wall mount with LED display. The setpoint shall have adjustment capability.

18. Smoke detectors:

a. Shall be a Four-Wire Controller and Detector.

b. Shall be environmental compensated with differential sensing for reliable, stable, and drift-free sensitivity.

c. Shall use magnet-activated test/reset sensor switches.

d. Shall have tool-less connection terminal access.

e. Shall have a recessed momentary switch for testing and resetting the detector.

f. Controller shall include:

(1.) One set of normally open alarm initiation contacts for connection to an initiating device circuit on a fire alarm control panel.

(2.) Two Form-C auxiliary alarm relays for interface with rooftop unit or other equipment.

(3.) One Form-C supervision (trouble) relay to control the operation of the Trouble LED on a remote test/reset station.

(4.) Capable of direct connection to two individual detector modules.

(5.) Can be wired to up to 14 other duct smoke detectors for multiple fan shutdown applications

19. Winter start kit
    a. Shall contain a bypass device around the low pressure switch.
    b. Shall be required when mechanical cooling is required down to 25°F (-4°C).
    c. Shall not be required to operate on an economizer when below an outdoor ambient of 40°F (4°C).
20. Time Guard
    a. Shall prevent compressor short cycling by providing a 5-minute delay (±2 minutes) before restarting a compressor after shutdown for any reason.
    b. One device shall be required per compressor.
21. Barometric Hood (Horizontal Economizer Applications)
    a. Shall be required when a horizontal economizer and barometric relief are required. Barometric relief damper must be installed in the return air (horizontal) duct work. This hood provides weather protection.
22. California OSHPD Seismic Certification Label (17-28 sizes only)
    a. Units meet the seismic capacity requirements of the International Code Council Evaluation Service (ICC-ES) document AC156 (Acceptance Criteria for Seismic Qualification by Shake-Table Testing of Nonstructural Components and Systems) and per International Building Code (IBC 2009) at an SDS (g) value of 2.00 z/h=1.0, Ip=1.5 and certified by independent structural engineers.
    b. Units shall include a certification label that meets the CA OSHPD Special Seismic Certification pre-approval labeling requirements on the external chassis of the unit.

Copyright 2011 Carrier Corp. • 7310 W. Morris St. • Indianapolis, IN 46231 Printed in U.S.A. Edition Date: 06/11 **Catalog No: 48TC–15PD**

Manufacturer reserves the right to change, at any time, specifications and designs without notice and without obligations. Replaces: 48TC–13PD