Carrier®
HEATING & COOLING

Product Data

INFINITY™ 13 48XP(N) Single-Packaged Gas Heating/Electric Cooling Units

with Puron® (R-410A) Refrigerant

2 to 5 Nominal Tons

Puron®
the environmentally sound refrigerant

ENERGY STAR

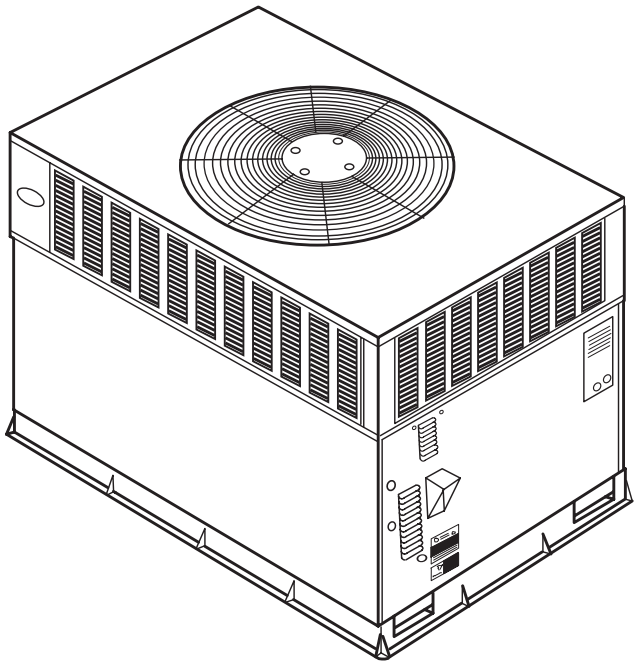

UNIT 48XP

INFINITY SERIES

Single-Packaged Products with Energy-Saving Features and Puron® refrigerant.

- Direct Spark Ignition
- Low Sound Levels
- Up to 81% AFUE
- 13 SEER
- Variable Speed Blower-Standard
- Factory Installed TXV

Features/Benefits

One-piece heating and cooling units with low sound levels, easy installation, low maintenance, and dependable performance.

Puron® Environmentally Sound Refrigerant is Carrier's unique refrigerant designed to help protect the environment. Puron is an HFC refrigerant which does not contain chlorine that can harm the ozone layer. The most important advantage of Puron refrigerant is that it has not been banned in future air conditioning systems as the traditional refrigerant R-22 has been. Puron refrigerant is in service in thousands of systems proving highly reliable, environmentally sound performance.

IdealHumidity™ Technology featuring Thermidistat control and Variable Speed Blower motor that provides greater comfort, humidity control, and energy efficiency. You can expect up to 30 times better dehumidification; economical constant fan for less than $50 a year, which provides improved indoor air quality and more even temperatures from room to room; and reduced indoor noise due to lower air velocity. In addition, you'll realize improved installation flexibility with 3 different airflow choices for best overall comfort.

Copyright 2004 Carrier Corporation

Easy Installation

Factory-assembled package is a compact, fully self-contained, combination gas heating/electric cooling unit that is pre-wired, pre-piped, and pre-charged for minimum installation expense.

These units are available in a variety of standard and optional heating/cooling size combinations with voltage options to meet residential and light commercial requirements. Units are lightweight and install easily on a rooftop or at ground level. The high tech composite unit base eliminates rust problems associated with ground level applications.

Convertible duct configuration

Unit is designed for easy use in either downflow or horizontal applications. Each unit is easily converted from horizontal to downflow with the two standard duct covers.

Efficient operation

High-efficiency design offers SEER (Seasonal Energy Efficiency Ratios) of 13.0 and AFUE (Annual Fuel Utilization Efficiency) ratings as high as 81%.

Energy-saving, direct spark ignition saves gas by operating only when the room thermostat calls for heating. Standard units are furnished with natural gas controls. A low-cost field-installed kit for propane conversion is available for all units.

48XP(N) units are dedicated Low NOx units designed for California installations. These models meet the California maximum oxides of nitrogen (NOx) emissions requirement of 40 nanograms/joule or less as shipped from the factory and MUST be installed in California Air Quality Management Districts where a Low NOx rule exists.

Durable, dependable components

Compressors are designed for high efficiency. Each compressor is hermetically sealed against contamination to help promote longer life and dependable operation. Each compressor also has vibration isolation to provide quieter operation. All compressors have internal high pressure and overcurrent protection.

Monoport inshot burners produce precise air-to-gas mixture, which provides for clean and efficient combustion. The large monoport on the inshot (or injection type) burners seldom, if ever, requires cleaning. All gas furnace components are accessible in one compartment.

Turbo-tubular™ heat exchangers are constructed of aluminized steel for corrosion resistance and optimum heat transfer for improved efficiency. The tubular design permits hot gases to make multiple passes across the path of the supply air.

In addition, dimples located on the heat exchanger walls force the hot gases to stay in close contact with the walls, improving heat transfer.

Direct-drive variable speed blower motor is standard on all 48XP models.

Direct-drive, PSC condenser-fan motors are designed to help reduce energy consumption and provide for cooling operation down to 55°F outdoor temperature. Motormaster® II low ambient kit is available as a field-installed accessory.

Corporate thermostats include the Time Guard® II anti-short cycle protection circuitry. If a non-corporate thermostat without anti-short cycle protection is used the Time Guard II field installed anti-short cycle kit is recommended.

Refrigerant system is designed to provide dependability. Liquid filter dryers are used to promote clean, unrestricted operation. Each unit leaves the factory with a full refrigerant charge. Refrigerant service connections make checking operating pressures easier.

Thermostatic Expansion Valve – A hard shutoff, balance port TXV maintains a constant superheat at the evaporator exit (cooling cycle) resulting in higher overall system efficiency.

High and Low Pressure Switches provide added reliability for the compressor.

Evaporator and condenser coils are computer-designed for optimum heat transfer and cooling efficiency. The evaporator coil is fabricated from copper tube and aluminum fins and is located inside the unit for protection against damage. The condenser coil is internally mounted on the top tier of the unit. Copper fin coils and pre-coated fin coils are available from the factory by special order. These coils are recommended in applications where aluminum fins are likely to be damaged due to corrosion. They are ideal for seacoast applications.

Low sound ratings ensure a quiet indoor and outdoor environment with sound ratings as low as 72dB. (See page 4.)

Easy to service cabinets provide easy single-panel accessibility to serviceable components during maintenance and installation. The basepan with integrated drain pan provides easy ground level installation with or without a mounting pad. Convenient handholds are provided to manipulate the unit on the jobsite. A nesting feature ensures a positive basepan to roof curb seal when the unit is roof mounted. A convenient 3/4-in. wide perimeter flange makes frame mounting on a rooftop easy.

Standard metal duct covers with insulation come with the unit and cover the horizontal duct openings. These can be left in place if the units are converted to downflow.

Downflow operation is easily provided in the field to allow vertical ductwork connections. The basepan utilizes knockout style seals on the bottom openings to ensure a positive seal in the horizontal airflow mode.

Integrated Gas Control (IGC) board provides safe and efficient control of heating and simplifies trouble-shooting through its built-in diagnostic function.

Cabinets are constructed of heavy-duty, phosphated, zinc-coated prepainted steel capable of withstanding 500 hours in salt spray. Interior surfaces of the evaporator/heat exchanger compartment are insulated with cleanable semi-rigid insulation board, which keeps the conditioned air from being affected by the outdoor ambient temperature and provides improved indoor air quality. (Conforms to American Society of Heating, Refrigeration and Air Conditioning Engineers No. 62P.) The sloped drain pan minimizes standing water in the drain. An external drain is provided.

Louvered Grille provides hail and vandalism protection.

Table of contents

	Page
Features/Benefits	1,2
Model Number Nomenclature	3
ARI Capacities	4
Physical Data	5,6
Options and Accessories	7,8
Base Unit Dimensions	9,10
Accessory Dimensions	11
Selection Procedure	12
Performance Data	13-18
Typical Piping and Wiring	19
Application Data	20
Electrical Data	21
Typical Wiring Schematics	22-23
Controls	24
Guide Specifications	27,28

Model number nomenclature

48XP — 024 040 3 —

Model Number
48XP – Single Packaged Gas Heating/Electric Cooling

Low NO_x indicator
– Standard
N Low NO_x

Nominal Cooling Capacity
024 – 2 ton
030 – 2.5 ton
036 – 3 ton
042 – 3.5 ton
048 – 4 ton
060 – 5 ton

Heat Input Size
040 – 40,000
060 – 60,000
090 – 90,000
115 – 115,000
130 – 130,000

Options

BT – AL evap, vinyl condens
CC – AL evap, CU condens
CU – CU evap & condens
TP – Base unit with tin plated indoor coil hairpins
TV – TP with vinyl coating on outdoor coil
TC – TP with AL indoor coil and CU/CU outdoor coil

Only used if ordering an option

V-Ph-Hz
3 – 208/230-1-60
5 – 208/230-3-60

LEGEND
AL — Aluminum
CU — Copper

ARI* capacities

UNIT 48XP	NOMINAL TONS	STANDARD CFM	NET COOLING CAPACITIES (Btuh)	EER@A‡	SEER†	SOUND RATINGS** (dB)
024040 **024060**	2	770	24,000	11.0	13.0	72
030040 **036060**	2-1/2	960	28,800	11.0	13.0	72
036060 **036090**	3	1100	36,000	11.0	13.0	72
042060 **042090**	3-1/2	1450	41,000	11.0	13.0	72
048090 **048115** **048130**	4	1450	45,000	11.0	13.0	78
060090 **060115** **060130**	5	1710	57,000	11.0	13.0	78

LEGEND

dB — Decibels
db — Dry Bulb
SEER — Seasonal Energy Efficiency Ratio
wb — Web Bulb
* Air Conditioning & Refrigeration Institute.
† Rated in accordance with U.S. Government DOE (Department of Energy) test procedures and/or ARI Standard 210/240-89.
‡ "A" conditions – 80°Fdb/67°Fwb indoor & 95°Fdb outdoor.

** Tested in accordance with ARI Standard 270-95 (not listed in ARI).

NOTES:

1. Ratings are net values, reflecting the effects of circulating fan heat. Ratings are based on:

   Cooling Standard: 80°F db, 67°F wb indoor entering-air temperature and 95°F db outdoor entering-air temperature.

2. Before purchasing this appliance, read important energy cost and efficiency information available from your retailer.

ARI* CAPACITIES
HEATING CAPACITIES AND EFFICIENCIES

UNIT 48XP	HEATING INPUT (Btuh)	OUTPUT CAPACITY (Btuh)	TEMPERATURE RISE RANGE (°F)	AFUE
024040 **030040**	40,000	31,000	20-50	80.1
024060 **030060** **036060** **042060**	60,000	46,000 46,000 46,000 47,000	35-65 35-65 25-55 20-50	78.4 78.4 78.7 78.7
036090 **042090** **048090** **060090**	90,000 90,000 90,000 90,000	70,000 71,000 70,000 70,000	45-75 35-65 25-55 25-55	79.9 79.9 78.6 78.6
048115 **060115**	115,000	92,000	35-65	81.1
048130 **060130**	130,000	104,000 103,000	40-70	80.3

LEGEND

AFUE — Annual Fuel Utilization Efficiency
NOTE: Before purchasing this appliance, read important energy cost and efficiency information available from your retailer.

Physical data

UNIT SIZE 48XP	024040	024060	030040	030060	036060	036090	042060	042090
NOMINAL CAPACITY (ton)	2	2	2-1/2	2-1/2	3	3	3-1/2	3-1/2
OPERATING WEIGHT (lb)	350	350	350	350	388	388	440	440
COMPRESSORS Quantity	Scroll 1							
REFRIGERANT (R-410A) Quantity (lb)	7.3	7.3	8.0	8.0	9.5	9.5	10.7	10.7
REFRIGERANT METERING DEVICE Indoor	TXV	TXV	TXV	TXV	TXV	TXV	TXV	TXV
CONDENSER COIL Rows—Fins/in. Face Area (sq ft)	2/21 11.95	2/21 11.95	2/21 11.95	2/21 11.95	2/21 13.7	2/21 13.7	2/21 15.4	2/21 15.4
CONDENSER FAN Nominal Cfm Diameter (in.) Motor Hp (Rpm)	2350 22 1/8 (825)	2350 22 1/8 (825)	2350 22 1/8 (825)	2350 22 1/8 (825)	2800 22 1/8 (825)	2800 22 1/8 (825)	2800 22 1/8 (825)	2800 22 1/8 (825)
EVAPORATOR COIL Rows—fins/in. Face Area (sq ft)	3/15 3.7	3/15 3.7	3/15 3.7	3/15 3.7	4/15 3.7	4/15 3.7	3/15 3.7	3/15 3.7
EVAPORATOR BLOWER Nominal Airflow (Cfm) Size (in.) Motor Hp (Rpm)	770 10 x 10 1/2	770 10 x 10 1/2	960 10 x 10 1/2	960 10 x 10 1/2	1150 11 x 10 3/4	1150 11 x 10 3/4	1400 11 x 10 3/4	1400 11 x 10 3/4
FURNACE SECTION* Burner Orifice No. (Qty…Drill Size) Natural Burner Orifice No. (Qty…Drill Size) Propane	2…44 2…50	2…44 2…50	2…44 2…50	2…44 2…50	2…38 2…46	3…38 3…46	2…38 2…46	3…38 2…46
HIGH-PRESSURE SWITCH (psig) Cutout Reset (Auto.)	610 ± 15 420 ± 25							
LOSS-OF-CHARGE/LOW-PRESSURE SWITCH (Liquid Line) (psig) Cutout Reset (Auto.)	20 ± 5 45 ± 10							
RETURN-AIR FILTERS (in.)† Throwaway	20 x 24 x 1	20 x 24 x 1	20 x 24 x 1	20 x 24 x 1	20 x 24 x 1	20 x 24 x 1	24 x 30 x 1	24 x 30 x 1

† Required filter sizes shown are based on the larger of the ARI (Air Conditioning & Refrigeration Institute) rated cooling airflow or the heating airflow velocity of 300 ft/min for throwaway type or 450 ft/min for high-capacity type. Air filter pressure drop for non-standard filters must not exceed 0.08 in. wg.

* Based on altitude of 0 to 2000 ft.

Physical data continued

UNIT SIZE 48XP	048090	048115	048130	060090	060115	060130
NOMINAL CAPACITY (ton)	4	4	4	5	5	5
OPERATING WEIGHT (lb)	463	463	463	499	499	499
COMPRESSORS Quantity	Scroll 1					
REFRIGERANT (R-410A) Quantity (lb)	11.25	11.25	11.25	13.5	13.5	13.5
REFRIGERANT METERING DEVICE Indoor	TXV	TXV	TXV	TXV	TXV	TXV
CONDENSER COIL Rows—Fins/in. Face Area (sq ft)	2/21 17.4	2/21 17.4	2/21 17.4	2/21 19.3	2/21 19.3	2/21 19.3
CONDENSER FAN Nominal Cfm Diameter (in.) Motor Hp (Rpm)	3300 22 1/4 (1100)	3300 22 1/4 (1100)	3300 22 1/4 (1100)	3300 22 1/4 (1100)	3300 22 1/4 (1100)	3300 22 1/4 (1100)
EVAPORATOR COIL Rows—fins/in. Face Area (sq ft)	4/15 4.7	4/15 4.7	4/15 4.7	4/17 5.7	4/17 5.7	4/17 5.7
EVAPORATOR BLOWER Nominal Airflow (Cfm) Size (in.) Motor Hp (Rpm)	1400 11 x 10 3/4	1400 11 x 10 3/4	1400 11 x 10 3/4	1710 11 x 10 1.0	1710 11 x 10 1.0	1710 11 x 10 1.0
FURNACE SECTION* Burner Orifice No. (Qty…Drill Size) Natural Gas Burner Orifice No. (Qty…Drill Size) Propane Gas	3…38 3…46	3…33 3…42	3…31 3…41	3…38 3…46	3…33 3…42	3…31 3…41
HIGH-PRESSURE SWITCH (psig) Cutout Reset (Auto.)	610 ± 15 420 ± 25					
LOSS-OF-CHARGE/LOW-PRESSURE SWITCH (Liquid Line) (psig) Cutout Reset (Auto.)	20 ± 5 45 ± 10					
RETURN-AIR FILTERS (in.)† Throwaway Size	24 x 30 x 1	24 x 30 x 1	24 x 30 x 1	24 x 30 x 1	24 x 30 x 1	24 x 30 x 1

† Required filter sizes shown are based on the larger of the ARI (Air Conditioning & Refrigeration Institute) rated cooling airflow or the heating airflow velocity of 300 ft/min for throwaway type or 450 ft/min for high-capacity type. Air filter pressure drop for non-standard filters must not exceed 0.08 in. wg.

* Based on altitude of 0 to 2000 ft.

OUTDOOR SOUND: OCTAVE BAND DATA — DECIBELS (Lw(A))

MODEL NO.	48XP					
Frequency (Hz)	024	030	036	042	048	060
125	58.8	58.8	60.7	56.7	62.4	63.5
250	63.5	63.5	63.3	62.8	69.9	67.6
500	67.2	67.2	66.8	67.8	71.3	71.8
1000	66.9	66.9	66.5	67.4	73.4	75.5
2000	63.7	63.7	64.2	63.7	70.0	71.0
4000	58.3	58.3	60.3	57.7	66.3	68.1
8000	50.0	50.0	53.0	50.8	60.1	59.9

Options and accessories

Factory-installed options

Coil options include Tin-Plated* indoor hairpins, copper/copper and vinyl-coated construction for refrigerant coils. Units are shipped standard with copper tube/aluminum fin construction. See model number nomenclature for coil options.

*Tin-Plated indoor coils are built with special hairpins that are designed to resist both general pitting corrosion and excessive indoor corrosion (Formicary Corrosion).

Field-installed accessories

Economizer with Solid-State Controls and Barometric Relief Dampers
Manual Air Damper (25% open)
Filter Rack
Roof Curbs (8-in. and 14-in.)
Square-to-Round Duct Transition Kit
Thermidistat™
Thermostats
Crankcase Heater
Compressor Hard Start Kit (for use on single-phase units only)
LP Conversion Kit
High Altitude Kit
Low Ambient Kit (Motormaster® II Control)
Lifting Kit
Solid-State Time Guard® II Device
LP to Natural Conversion Kit

Economizer with solid-state controls and barometric relief dampers includes filter racks and provide outdoor air during cooling and reduce compressor operation.

Manual outside air damper includes hood and filter rack with adjustable damper blade for up to 25% outdoor air.

Flat roof curbs in both 8 in. and 14 in. sizes are available for roof mounted applications.

Square-to-round duct transition kit enables 024-048 size units to be fitted to 14 in. round ductwork.

Compressor hard start kit assists compressor start-up by providing additional starting torque on single phase units and prolongs compressor motor life.

Thermidistat Control coupled with the system's variable speed indoor blower delivers Carrier's patented IdealHumidity™ Technology that allows for even greater humidity control. Along with more precisely controlling temperature and humidity, the Thermidistat offers full seven-day programmability allowing you to further customize your comfort and energy savings.

Thermostats provide control for the system heating and cooling functions. Thermostat models are available in both programmable and non-programmable versions.

Crankcase heater provides anti-floodback protection for low-load cooling applications.

LP (liquid propane) conversion kit allows for conversion from natural gas to liquid propane fuel.

Low-ambient kit (Motormaster® II control) allows the use of mechanical cooling down to outdoor temperatures as low as 0°F.

Solid-state Time Guard® II device provides short-cycling protection for the compressor. Not required with corporate electronic thermostats.

Filter rack features easy installation, serviceability, and high-filtering performance for vertical or horizontal applications.

High altitude kit is for use at 2001 to 6000 ft above sea level. Kit consists of natural gas orifices that compensate for gas heat operation at high altitude.

LP to natural gas conversion kit allows conversion back to natural gas.

Lifting kit includes lifting brackets which are used to lift unit for rooftop applications.

ECONOMIZER

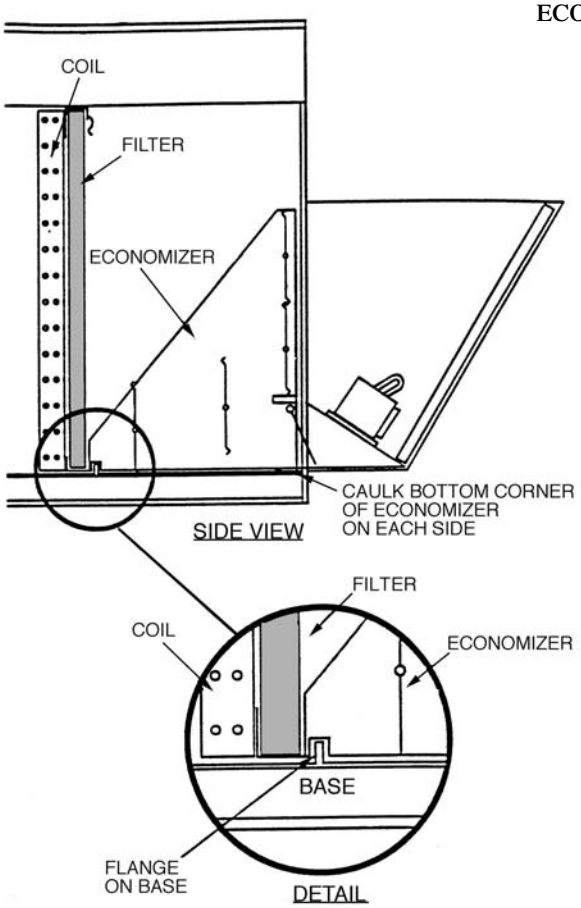

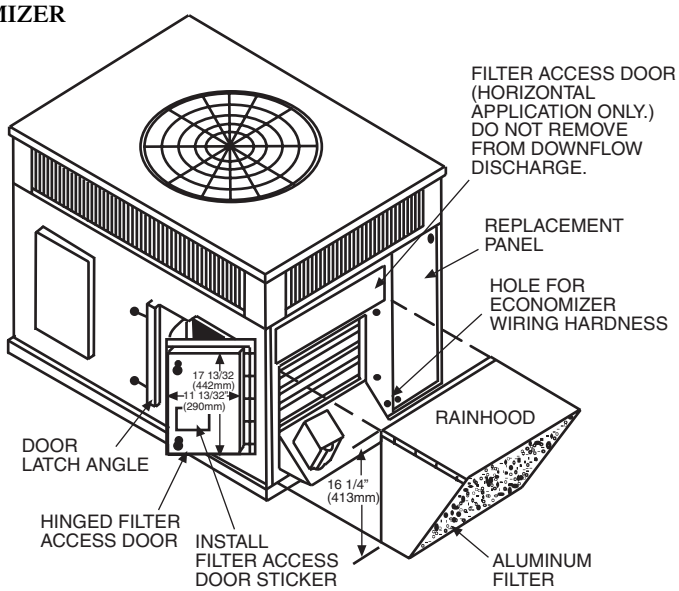

FILTER RACK

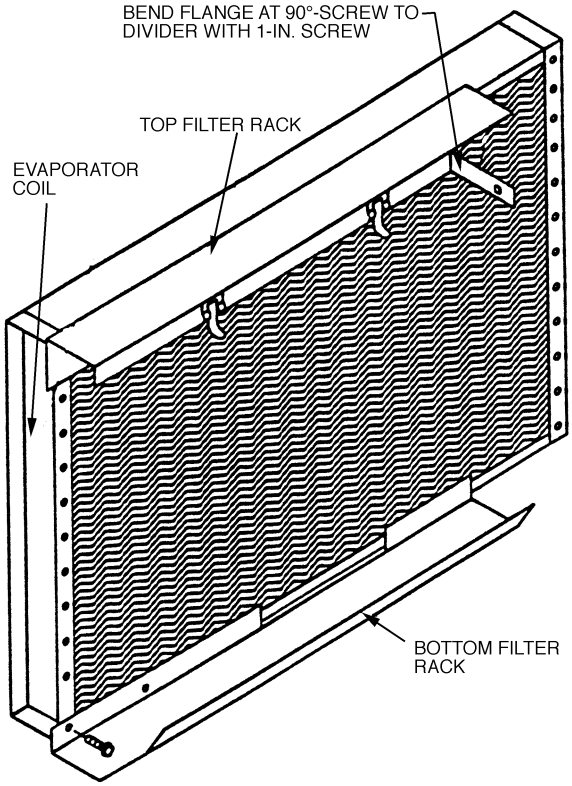

MANUAL OUTSIDE AIR DAMPER

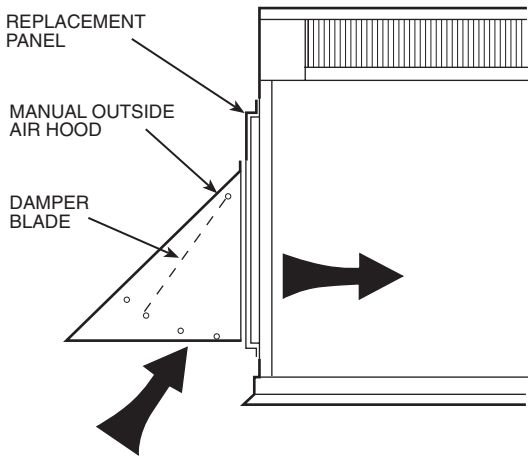

Base unit dimensions — 48XP024-036

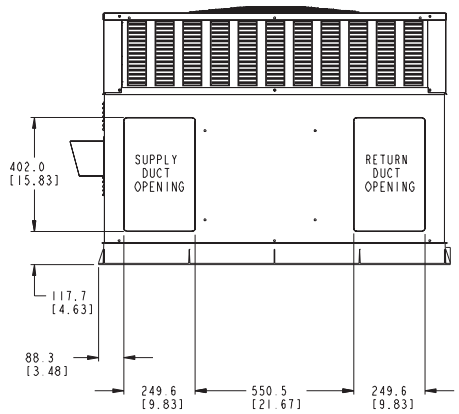

REAR VIEW

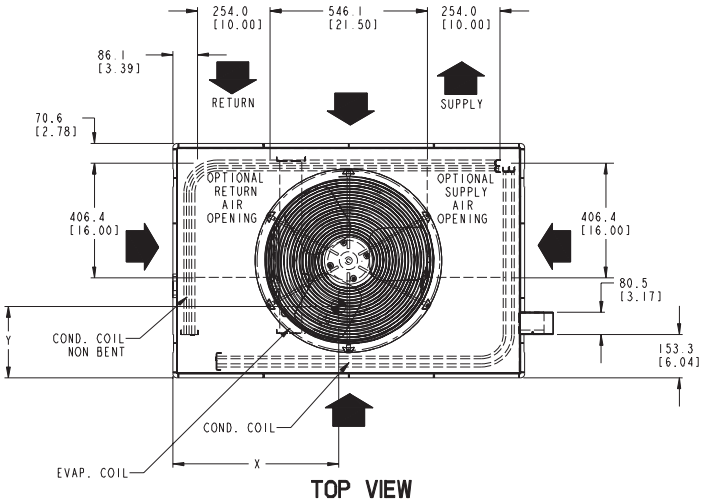

TOP VIEW

REQ'D CLEARANCES FOR OPERATION AND SERVICING. in. (mm)

Evaporator coil access side 36 (914)
Power entry side (except for NEC requirements) 36 (914)
Unit top 48 (1219)
Side opposite ducts 36 (914)
Duct panel . . . . . .12 (304.8)*

*Minimum distances: If unit is placed less than 12 in. (304.8 mm) from wall system, then the system performance may be compromised.

LEGEND
CG - Center of Gravity
COND - Condenser
EVAP - Evaporator
NEC - National Electrical Code
REQ'D - Required
Note: Dimensions are in in. (mm)

REQ'D CLEARANCES TO COMBUSTIBLE MAT'L. in. (mm)

Top of unit 14 (355.6)
Duct side of unit 2 (50.8)
Side opposite ducts 14 (355.6)
Bottom of unit 0.50 (12.7)
Flue panel 36 (914.4)

NEC REQ'D CLEARANCES. in. (mm)

Between units, power entry side 42 (1066.8)
Unit and ungrounded surfaces, power entry side 36 (914)
Unit and block or concrete walls and other grounded surfaces, control box side 42 (1066.8)

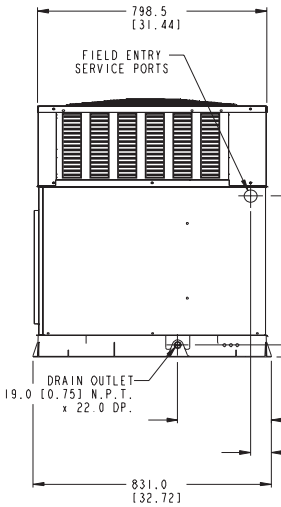

LEFT SIDE VIEW

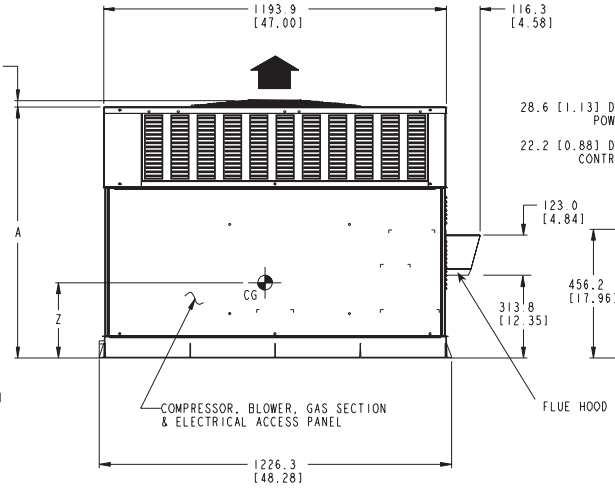

FRONT VIEW

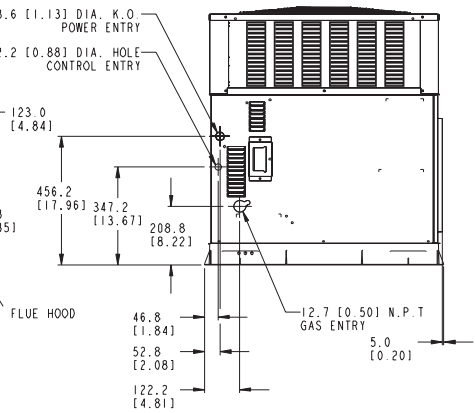

RIGHT SIDE VIEW

UNIT	ELECTRICAL CHARACTERISTICS	UNIT WEIGHT		UNIT HEIGHT IN. [MM] "A"	CENTER OF GRAVITY IN. [MM]		
		lb.	kg.		X	Y	Z
48XP024040/060	208/230-1-60	350	159	39.02 [991.1]	20 [508]	19.3 [489]	17.6 [447]
48XP030040/060	208/230-1-60	350	159	39.02 [991.1]	20 [508]	19.3 [489]	17.6 [447]
48XP036060/090	208/230-1-60, 208/230-3-60	388	176	41.02 [1041.9]	20 [508]	14 [355.6]	13 [330.2]

Base unit dimensions – 48XP042-060

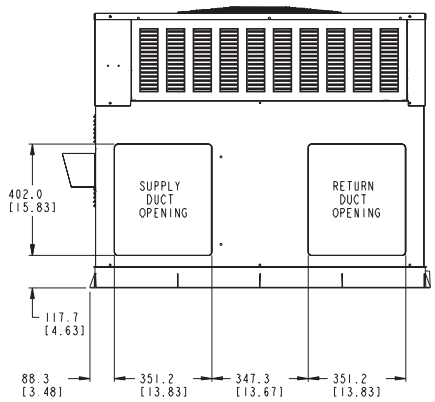

REAR VIEW

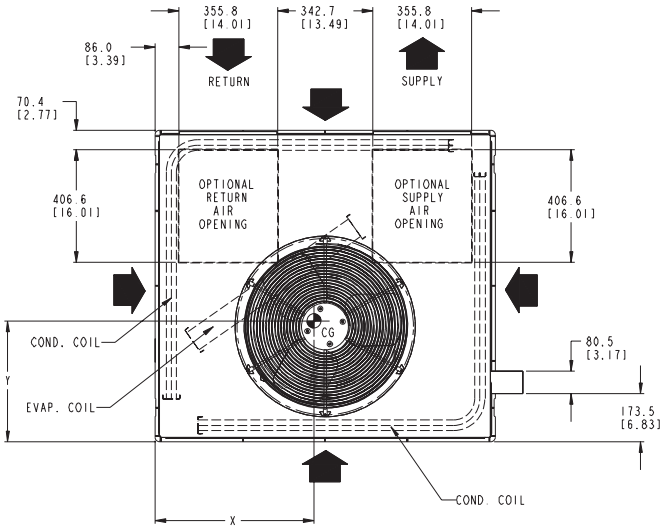

TOP VIEW

REQUIRED CLEARANCE FOR OPERATION AND SERVICING

	in. [mm]
EVAP. COIL ACCESS SIDE	36.00 [914.0]
POWER ENTRY SIDE	36.00 [914.0]
(EXCEPT FOR NEC REQUIREMENTS)	
UNIT TOP	36.00 [914.0]
SIDE OPPOSITE DUCTS	36.00 [914.0]
DUCT PANEL	12.00 [304.8] *

*MINIMUM DISTANCES: IF UNIT IS PLACED LESS THAN 12.00 [304.8] FROM WALL SYSTEM, THEN SYSTEM PERFORMANCE MAYBE COMPROMISE.

REQUIRED CLEARANCE TO COMBUSTIBLE MATL.

	in. [mm]
TOP OF UNIT	14.00 [355.6]
DUCT SIDE OF UNIT	2.00 [50.8]
SIDE OPPOSITE DUCTS	14.00 [355.6]
BOTTOM OF UNIT	0.50 [12.7]
FLUE PANEL	36.00 [914.4]

NEC. REQUIRED CLEARANCES.

	MILLIMETERS [IN.]
BETWEEN UNITS, POWER ENTRY SIDE	42.00 [1066.8]
UNIT AND UNGROUNDED SURFACES, POWER ENTRY SIDE	36.00 [914.0]
UNIT AND BLOCK OR CONCRETE WALLS AND OTHER GROUNDED SURFACES, POWER ENTRY SIDE	42.00 [1066.8]

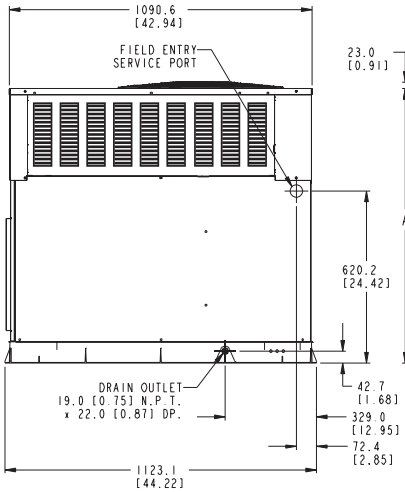

LEFT SIDE VIEW

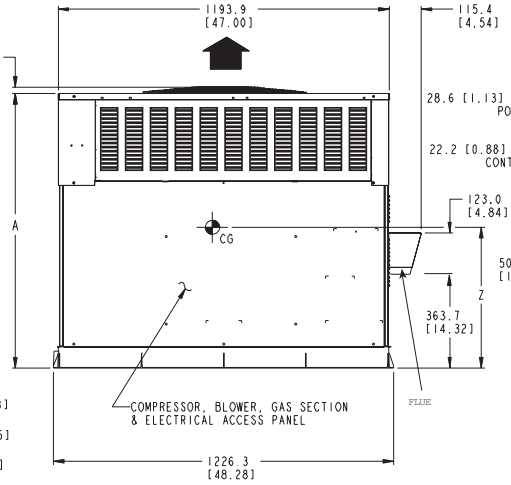

FRONT VIEW

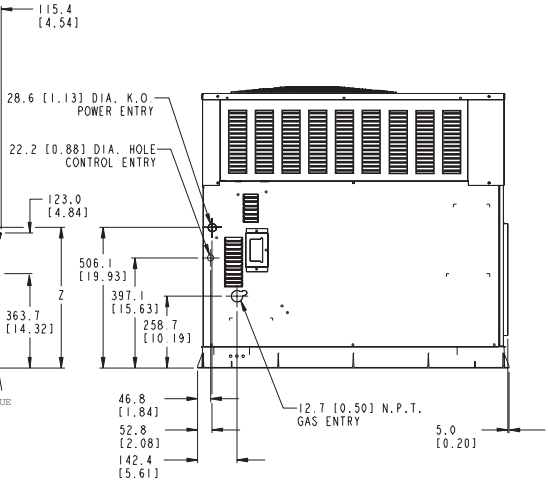

RIGHT SIDE VIEW

UNIT	ELECTRICAL CHARACTERISTICS	UNIT WEIGHT		UNIT HEIGHT IN. [MM] "A"	CENTER OF GRAVITY IN. [MM]		
		lb.	kg.		X	Y	Z
48XP042060/090	208/230-1-60 208/230-3-60	440	200	42.98 [1091.7]	21 [533.4]	20.5 [520.7]	16.6 [421.6]
48XP048090/115/130	208/230-1-60 208/230-3-60	463	210	44.98 [1142.5]	19.5 [495.3]	21.3 [539.8]	18.0 [457.2]
48XP060090/115/130	208/230-1-60 208/230-3-60	499	226	46.98 [1193.3]	21 [533.4]	20 [508]	17.6 [447.0]

ACCESSORY DIMENSIONS

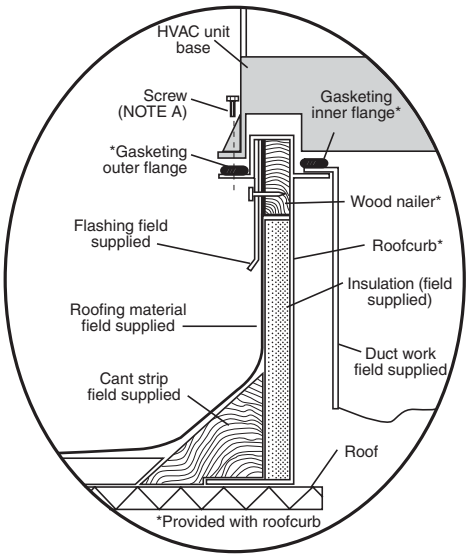

Roof Curb for Small Cabinet

Note A: When unit mounting screw is used, retainer bracket must also be used.

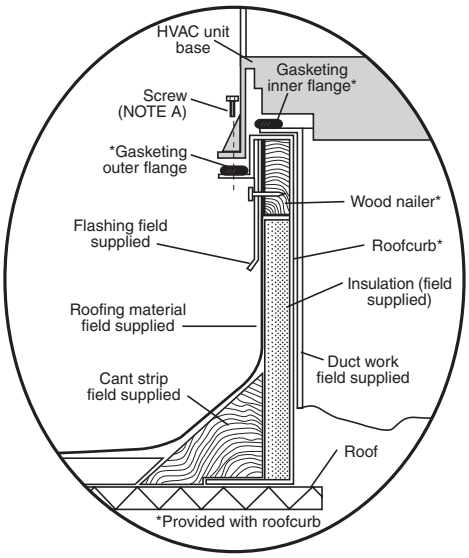

Roof Curb for Large Cabinet

Note A: When unit mounting screw is used, retainer bracket must also be used.

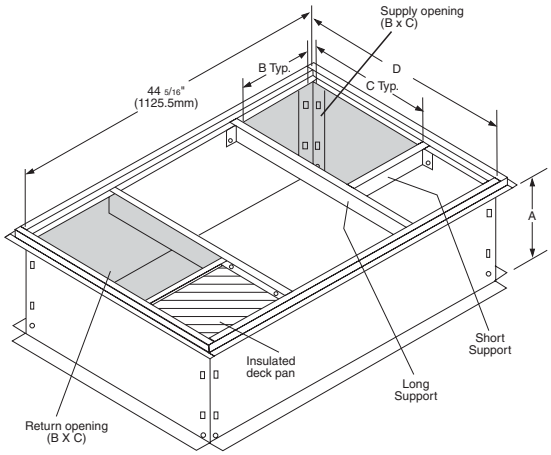

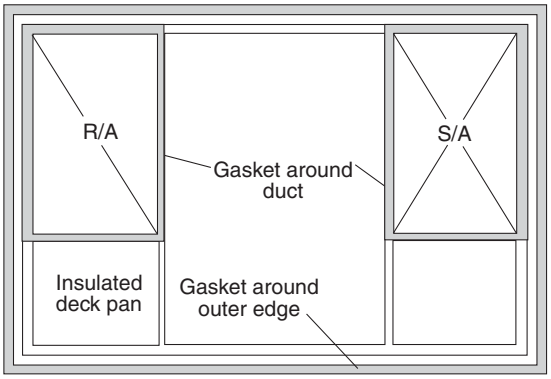

C00076

Roof Curb Dimensions
Side View

	UNIT SIZE	ODS ORDER NUMBER	A IN. [MM]	B IN. [MM]	C IN. [MM]	D IN. [MM]
ROOF CURB	024-036	CPRFCURB006A00	8 [203]	11 [279]	16 1/2 [419]	28 3/4 [730]
		CPRFCURB007A00	14 [356]	11 [279]	16 1/2 [419]	28 3/4 [730]
	042-060	CPRFCURB008A00	8 [203]	16 3/16 [411]	17 3/8 [441]	40 1/4 [1022]
		CPRFCURB009A00	14 [356]	16 3/16 [411]	17 3/8 [441]	40 1/4 [1022]

Notes:
1. Roof curb must be set up for unit being installed.
2. Seal strip must be applied as required to unit being installed.
3. Dimensions in [ ] are in millimeters.
4. Roof curb is made of 16 gage steel.
5. Table lists only the dimensions per part number that have changed.
6. Attach ductwork to curb (flanges of duct rest on curb).
7. Insulated panels: 1-in. thick fiberglass 1 lb. density.
8. Dimensions are in inches.
9. When unit mounting screw is used (Note A), a retainer bracket must be used as well. This bracket must also be used when required by code for hurricane or seismic conditions. This bracket is available through Micrometl.

48XP CORNER WEIGHTS

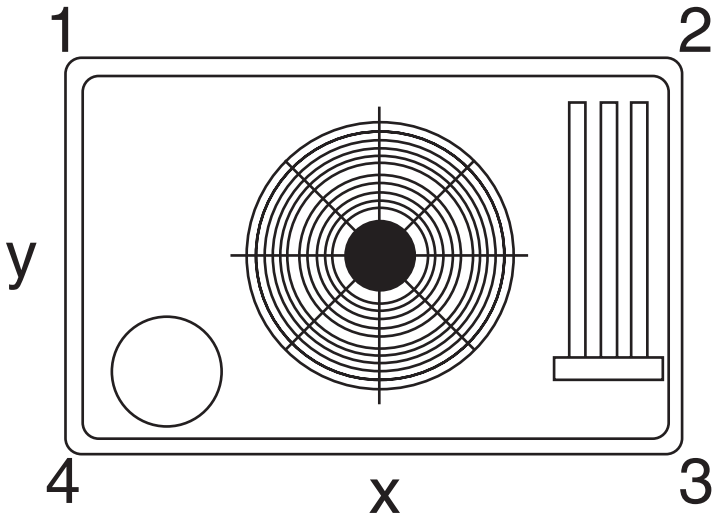

CORNER #	024	030	036	042	048	060
1	70	70	78	88	92	100
2	54	54	60	68	72	78
3	84	84	94	106	111	120
4	141	141	156	177	188	201
TOTAL WEIGHT	350	350	388	440	463	499

Selection procedure (with example)

I Determine cooling and heating requirements at design conditions:

Given:

Required Cooling Capacity (TC).....34,500 Btuh
Sensible Heat Capacity (SHC).....26,000 Btuh
Required Heating Capacity.....60,000 Btuh
Condenser Entering Air Temperature..... 95°F
Indoor-Air Temperature.....80°F edb 67°F ewb
Evaporator Air Quantity.....1200 CFM
External Static Pressure..... 0.2 in. wg
Electrical Characteristics.....230-1-60

II Select unit based on required cooling capacity.

Enter Net Cooling Capacities table at condenser entering temperature of 95 F. Unit 036 at 1225 cfm and 67 F ewb (entering wet bulb) will provide a total capacity of 36,500 Btuh and a SHC of 27,600 Btuh. Calculate SHC correction, if required, using Note 4 under Cooling Capacities tables.

III Select heating capacity of unit to provide design condition requirement.

In the Heating Capacities and Efficiencies table on page 4, note that the unit 036090 will provide 70,000 Btuh with an input of 90,000 Btuh.

IV Determine fan speed and power requirements at design conditions.

Before entering the air delivery tables, calculate the total static pressure required. From the given example, the Wet Coil Pressure Drop Table, and the Filter Pressure Drop table on page 16, find at 1200 cfm:

Wet Coil Pressure Drop	0.032 in. ws
External Static Pressure	0.2 in. wg
Filter Pressure Drop	0.13 in. wg
Total Static Pressure	0.362 in. wg

Enter the table for Dry Coil Air Delivery — Horizontal and Downflow Discharge. At 0.362 ESP (external static pressure), the fan will deliver 1235 cfm with the NOM Speed pin selected.

V Select unit that corresponds to power source available.

The Electrical Data table shows that the unit is designed to operate at 208/230-1-60.

PERFORMANCE DATA
STANDARD INDOOR ECM MOTOR
COOLING CAPACITIES

48XP024 COOLING PERFORMANCE TABLE

Temp (F) Outdoor Air Entering Condenser		Evaporator Air — CFM / BF											
		800/0.026				900/0.032				1000/0.04			
		Evaporator Air — Ewb (F)											
		62	63*	67	72	62	63*	67	72	62	63*	67	72
75	TC	24.0	24.5	26.5	29.1	24.6	25.1	27.1	29.8	25.1	25.5	27.4	30.4
	SHC	21.9	21.3	18.7	15.4	23.5	22.8	19.8	16.1	25.0	24.2	20.8	16.7
	kW	1.7	1.7	1.8	1.8	1.8	1.8	1.8	1.8	1.8	1.8	1.8	1.9
85	TC	22.9	23.3	25.3	27.9	23.5	23.9	25.8	28.5	23.9	24.3	26.2	28.9
	SHC	21.4	20.7	18.1	14.9	22.9	22.2	19.2	15.6	24.3	23.6	20.3	16.2
	kW	1.9	1.9	2.0	2.0	2.0	2.0	2.0	2.0	2.0	2.0	2.1	2.1
95	TC	21.8	22.2	24.0	26.5	22.3	22.6	24.5	27.0	22.7	23.0	24.8	27.4
	SHC	20.8	20.2	17.6	14.3	22.3	21.6	18.7	15.0	23.6	22.9	19.7	15.6
	kW	2.2	2.2	2.2	2.2	2.2	2.2	2.2	2.2	2.2	2.2	2.3	2.3
105	TC	20.5	20.9	22.6	25.0	21.0	21.3	23.0	25.4	21.6	21.7	23.3	25.7
	SHC	20.2	19.5	16.9	13.7	21.6	20.9	18.0	14.3	22.5	22.2	19.0	14.9
	kW	2.4	2.4	2.4	2.4	2.4	2.4	2.5	2.5	2.5	2.5	2.5	2.5
115	TC	19.2	19.5	21.1	23.3	19.8	19.9	21.5	23.7	20.7	20.4	21.7	23.6
	SHC	19.4	18.8	16.3	13.0	20.6	20.2	17.3	13.7	21.5	21.2	18.3	14.1
	kW	2.7	2.7	2.7	2.7	2.7	2.7	2.7	2.7	2.7	2.7	2.8	2.8
125	TC	17.8	18.0	19.4	21.4	18.5	18.5	19.5	21.7	19.0	19.0	19.9	21.9
	SHC	18.5	18.1	15.5	12.3	19.2	19.2	16.5	12.9	19.8	19.7	17.6	13.5
	kW	2.9	2.9	3.0	3.0	3.0	3.0	3.0	3.0	3.0	3.0	3.1	3.1

48XP030 COOLING PERFORMANCE TABLE

Temp (F) Outdoor Air Entering Condenser		Evaporator Air—CFM/BF											
		875/0.06				1000/0.07				1125/0.08			
		Evaporator Air — Ewb (F)											
		62	63*	67	72	62	63*	67	72	62	63*	67	72
75	TC	27.9	28.6	30.7	33.6	28.8	29.4	31.6	34.5	29.3	30.0	32.2	35.2
	SHC	24.1	20.0	20.6	16.8	26.0	21.2	22.1	17.8	27.0	22.6	23.5	18.7
	kW	2.1	2.1	2.1	2.1	2.1	2.1	2.1	2.2	2.1	2.1	2.1	2.2
85	TC	26.9	27.5	29.5	32.3	27.6	28.1	30.2	33.1	28.3	28.7	30.8	33.7
	SHC	23.8	19.5	20.3	16.4	25.6	20.8	21.7	17.4	26.5	22.1	23.1	18.3
	kW	2.3	2.3	2.4	2.4	2.3	2.4	2.4	2.4	2.4	2.4	2.4	2.4
95	TC	25.6	26.2	28.2	30.8	26.3	26.8	28.8	31.5	27.0	27.3	29.3	32.0
	SHC	23.1	19.1	19.9	16.0	24.7	20.5	21.3	16.9	26.2	21.7	22.6	17.8
	kW	2.6	2.6	2.6	2.6	2.6	2.6	2.6	2.6	2.6	2.6	2.6	2.6
105	TC	24.3	24.7	26.6	29.2	25.1	25.3	27.2	29.7	25.9	25.7	27.5	30.1
	SHC	22.4	18.6	19.3	15.4	23.8	19.9	20.8	16.3	24.4	21.1	22.1	17.2
	kW	2.9	2.9	2.9	2.9	2.9	2.9	2.9	2.9	2.9	2.9	2.9	2.9
115	TC	22.8	23.2	24.9	27.3	23.8	23.6	25.3	27.7	24.5	24.0	25.7	28.1
	SHC	21.7	18.0	18.8	14.8	22.3	19.3	20.2	15.7	23.7	20.5	21.5	16.6
	kW	3.2	3.2	3.2	3.2	3.2	3.2	3.2	3.2	3.2	3.2	3.2	3.2
125	TC	21.4	21.4	24.9	27.3	23.8	23.6	25.3	27.7	24.5	24.0	25.7	28.1
	SHC	20.7	17.3	18.8	14.8	22.3	19.3	20.2	15.7	23.7	20.5	21.5	16.6
	kW	3.5	3.5	3.2	3.2	3.2	3.2	3.2	3.2	3.2	3.2	3.2	3.2

See Legend and Notes on page 15.

PERFORMANCE DATA (cont)
STANDARD INDOOR ECM MOTOR
COOLING CAPACITIES (cont)

48XP036 COOLING PERFORMANCE TABLE

Temp (F) Outdoor Air Entering Condenser		Evaporator Air—CFM/BF											
		1100/0.06				1225/0.07				1400/0.08			
		Evaporator Air — Ewb (F)											
		62	63*	67	72	62	63*	67	72	62	63*	67	72
75	TC	36.2	36.8	39.7	43.8	36.9	37.4	40.3	44.4	37.9	38.1	41.0	45.1
	SHC	33.2	26.7	27.8	22.3	34.7	27.9	29.0	23.1	36.9	29.6	30.9	24.2
	kW	2.7	2.7	2.7	2.7	2.7	2.7	2.7	2.8	2.8	2.8	2.8	2.9
85	TC	34.6	35.1	37.9	41.8	35.3	35.6	38.4	42.4	36.4	36.3	39.1	43.1
	SHC	32.4	26.0	27.1	21.6	34.0	27.1	28.3	22.4	35.6	28.9	30.2	23.6
	kW	2.9	2.9	3.0	3.0	3.0	3.0	3.0	3.0	3.1	3.1	3.1	3.2
95	TC	33.0	33.4	36.0	39.7	33.7	33.8	36.5	40.2	34.8	34.4	37.0	40.8
	SHC	31.6	25.3	26.4	20.9	32.9	26.4	27.6	21.7	34.4	28.1	29.4	22.8
	kW	3.2	3.2	3.3	3.3	3.3	3.3	3.3	3.4	3.4	3.4	3.4	3.5
105	TC	31.3	31.5	34.0	37.5	32.1	31.9	34.3	37.9	33.1	32.4	34.9	38.4
	SHC	30.6	24.5	25.6	20.1	31.5	25.7	26.8	20.9	32.8	27.3	28.6	22.0
	kW	3.6	3.6	3.6	3.6	3.6	3.6	3.7	3.7	3.8	3.7	3.8	3.8
115	TC	29.6	29.4	31.8	35.0	30.4	29.8	32.1	35.4	31.3	30.3	32.6	35.8
	SHC	29.3	23.7	24.8	19.3	30.0	24.8	26.0	20.0	31.0	26.4	27.7	21.1
	kW	4.0	4.0	4.0	4.0	4.0	4.0	4.0	4.0	4.1	4.1	4.1	4.2
125	TC	27.8	27.2	29.4	32.4	28.4	27.5	29.7	32.7	29.3	28.0	30.1	33.0
	SHC	27.5	22.8	23.9	18.4	28.2	23.8	25.0	19.1	29.0	25.4	26.7	20.2
	kW	4.4	4.3	4.4	4.4	4.4	4.4	4.4	4.4	4.5	4.5	4.5	4.5

48XP042 COOLING PERFORMANCE TABLE

Temp (F) Outdoor Air Entering Condenser		Evaporator Air—CFM/BF											
		1100/0.06				1225/0.07				1400/0.08			
		Evaporator Air — Ewb (F)											
		62	63*	67	72	62	63*	67	72	62	63*	67	72
75	TC	39.6	40.4	43.4	47.6	40.5	41.2	44.2	48.4	41.5	42.1	45.1	49.4
	SHC	33.5	27.6	28.6	23.4	35.4	29.0	30.0	24.3	37.9	30.8	31.9	25.6
	kW	3.0	3.0	3.0	3.1	3.0	3.0	3.0	3.1	3.0	3.0	3.0	3.1
85	TC	37.9	38.7	41.5	45.5	38.7	39.4	42.3	46.3	39.7	40.2	43.2	47.2
	SHC	32.8	26.9	27.8	22.7	34.6	28.2	29.2	23.6	37.0	30.0	31.1	24.8
	kW	3.3	3.3	3.4	3.4	3.3	3.3	3.4	3.4	3.3	3.3	3.4	3.4
95	TC	36.2	36.8	39.6	43.4	36.9	37.5	40.3	44.1	37.8	38.2	41.0	44.9
	SHC	32.0	26.1	27.0	21.9	33.8	27.4	28.4	22.8	35.9	29.1	30.3	24.0
	kW	3.7	3.7	3.7	3.8	3.7	3.7	3.7	3.8	3.7	3.7	3.7	3.8
105	TC	34.2	34.8	37.4	41.0	34.9	35.4	38.0	41.6	36.0	36.0	38.7	42.3
	SHC	31.0	25.2	26.2	21.1	32.7	26.5	27.6	22.0	34.3	28.3	29.4	23.2
	kW	4.1	4.1	4.1	4.1	4.1	4.1	4.1	4.1	4.1	4.1	4.1	4.1
115	TC	32.1	32.6	35.0	38.4	32.8	33.1	35.5	38.9	34.0	33.7	36.1	39.5
	SHC	30.0	24.3	25.2	20.2	31.4	25.6	26.6	21.0	32.8	27.3	28.5	22.2
	kW	4.5	4.5	4.5	4.5	4.5	4.5	4.5	4.6	4.5	4.5	4.5	4.6
125	TC	29.8	30.1	32.3	35.3	30.6	30.5	32.7	35.7	31.7	31.0	33.2	36.2
	SHC	28.6	23.2	24.2	19.1	29.6	24.5	25.5	20.0	30.6	26.1	27.3	21.1
	kW	4.9	4.9	4.9	5.0	4.9	4.9	4.9	5.0	4.9	4.9	4.9	5.0

See Legend and Notes on page 15.

PERFORMANCE DATA (cont)
STANDARD INDOOR ECM MOTOR
COOLING CAPACITIES (cont)

48XP048 COOLING PERFORMANCE TABLE

Temp (F) Outdoor Air Entering Condenser		Evaporator Air—CFM/BF											
		1260/0.06				1400/0.06				1600/0.08			
		Evaporator Air — Ewb (F)											
		62	63*	67	72	62	63*	67	72	62	63*	67	72
75	TC	45.0	45.8	49.6	54.7	46.7	47.3	51.2	56.3	48.1	48.7	52.5	57.8
	SHC	39.3	32.0	33.4	27.2	42.6	34.3	35.8	28.9	45.8	36.8	38.4	30.6
	kW	3.4	3.4	3.4	3.4	3.4	3.4	3.4	3.5	3.4	3.4	3.4	3.5
85	TC	42.8	43.6	47.2	52.1	44.3	44.9	48.6	53.5	45.6	46.1	49.9	54.8
	SHC	38.2	30.9	32.3	26.2	41.3	33.2	34.7	27.7	44.3	35.5	37.3	29.4
	kW	3.7	3.7	3.8	3.8	3.7	3.7	3.8	3.8	3.8	3.8	3.8	3.8
95	TC	40.6	41.3	44.7	49.4	41.8	42.4	46.0	50.7	44.2	43.7	47.0	51.8
	SHC	36.9	29.8	31.2	25.2	39.9	32.0	33.6	26.7	43.0	34.6	36.1	28.3
	kW	4.1	4.1	4.2	4.2	4.1	4.1	4.2	4.2	4.2	4.1	4.2	4.2
105	TC	38.2	38.9	42.1	46.4	39.6	39.8	43.1	47.6	41.5	40.8	44.0	48.5
	SHC	35.7	28.7	30.1	24.0	38.3	30.7	32.3	25.5	40.0	33.2	34.8	27.0
	kW	4.6	4.6	4.6	4.6	4.6	4.6	4.6	4.7	4.6	4.6	4.6	4.7
115	TC	35.7	36.3	39.3	43.3	38.2	37.1	40.1	44.2	38.7	37.9	40.8	45.0
	SHC	34.4	27.5	28.9	22.9	35.7	29.5	31.0	24.3	38.2	31.8	33.5	25.8
	kW	5.0	5.0	5.1	5.1	5.1	5.0	5.1	5.1	5.1	5.1	5.1	5.1
125	TC	33.4	33.4	36.2	39.4	34.6	34.1	36.9	40.5	36.1	34.8	37.5	41.2
	SHC	32.1	26.2	27.6	21.5	33.8	28.2	29.7	22.9	35.6	30.2	31.9	24.4
	kW	5.6	5.6	5.6	5.7	5.6	5.6	5.6	5.6	5.6	5.6	5.6	5.6

48XP060 COOLING PERFORMANCE TABLE

Temp (F) Outdoor Air Entering Condenser		Evaporator Air—CFM/BF											
		1500/0.004				1750/0.007				2000/0.01			
		Evaporator Air — Ewb (F)											
		62	63*	67	72	62	63*	67	72	62	63*	67	72
75	TC	57.2	58.2	62.4	68.1	58.8	59.7	64.0	69.8	60.0	60.8	64.9	70.8
	SHC	49.4	47.9	41.6	33.8	53.6	51.8	44.5	35.4	57.6	55.4	47.1	36.8
	kW	4.1	4.1	4.2	4.2	4.2	4.3	4.3	4.4	4.4	4.4	4.5	4.6
85	TC	54.7	55.6	59.7	65.2	56.2	57.0	61.1	66.6	57.4	58.1	61.9	67.4
	SHC	48.2	46.7	40.4	32.6	52.4	50.5	43.2	34.2	56.3	54.2	45.8	35.6
	kW	4.5	4.5	4.6	4.7	4.7	4.7	4.8	4.9	4.8	4.9	5.0	5.0
95	TC	52.2	53.0	56.9	62.0	53.5	54.3	58.0	63.2	55.0	55.3	58.7	64.1
	SHC	47.0	45.4	39.2	31.4	51.1	49.2	41.9	32.9	55.0	52.9	44.5	34.4
	kW	5.0	5.0	5.1	5.2	5.1	5.2	5.3	5.3	5.2	5.3	5.5	5.5
105	TC	49.4	50.2	53.8	58.7	50.7	51.4	54.8	59.6	52.5	52.4	55.4	60.2
	SHC	45.7	44.1	37.9	30.1	49.8	47.9	40.6	31.6	52.5	51.6	43.2	33.0
	kW	5.5	5.6	5.6	5.7	5.7	5.7	5.8	5.9	5.8	5.8	6.0	6.1
115	TC	46.5	47.2	50.5	55.0	48.1	48.3	51.3	56.8	49.7	49.7	51.8	57.0
	SHC	44.3	42.7	36.4	28.7	48.1	46.6	39.2	30.6	49.7	49.7	41.8	31.7
	kW	6.1	6.2	6.2	6.3	6.2	6.3	6.4	6.4	6.4	6.4	6.6	6.6
125	TC	43.3	43.9	46.7	52.2	45.2	45.1	47.4	52.5	46.4	46.4	47.9	52.2
	SHC	42.8	41.2	34.9	27.8	45.2	45.1	37.6	28.9	46.4	46.4	40.2	29.7
	kW	6.7	6.8	6.8	6.8	6.8	6.9	7.0	7.0	7.0	7.0	7.2	7.2

LEGEND

BF — Bypass Factor
Ewb — Entering Wet-Bulb
kW — Total Unit Power Input
SHC — Sensible Heat Capacity (1000 Btuh)
TC — Cooling Capacity (1000 Btuh)
ECM — Electronic Computated Motor
* — TVA Conditions (75°F Entering Dry Bulb)

NOTES:

1. Ratings are net; they account for the effects of the evaporator-fan motor power and heat.
2. Direct interpolation is permissible. Do not extrapolate.
3. The following formulas may be used:

$$t_{ldb} = t_{edb} - \frac{\text{sensible capacity (Btuh)}}{1.10 \times \text{cfm}}$$

t_{lwb} = Wet-bulb temperature corresponding to enthalpy of air leaving evaporator coil (h_{lwb})

$$h_{lwb} = h_{ewb} - \frac{\text{total capacity (Btuh)}}{4.5 \times \text{cfm}}$$

Where: h_{ewb} = Enthalpy of air entering evaporator coil

4. The SHC is based on 80°F edb temperature of air entering evaporator coil. Below 80°F edb, subtract (Corr Factor x CFM) from SHC above 80°F edb, add (Corr Factor x CFM) to SHC Correction Factor = 1.10 x (1 – BF) x (edb – 80)

FILTER PRESSURE DROP (In. wg)

FILTER SIZE	CFM																		
	500	600	700	800	900	1000	1100	1200	1300	1400	1500	1600	1700	1800	1900	2000	2100	2200	2300
20 X 20 X 1	0.05	0.07	0.08	0.10	0.12	0.13	0.14	0.15	—	—	—	—	—	—	—	—	—	—	—
20 X 24 X 1	—	—	—	—	0.09	0.10	0.11	0.13	0.14	0.15	0.16	—	—	—	—	—	—	—	—
24 X 30 X 1	—	—	—	—	—	—	—	0.07	0.08	0.09	0.10	0.11	0.12	0.13	0.14	0.15	0.16	0.17	0.18

48XP COOLING DRY COIL ECM AIRFLOW—SMALL CABINET

UNIT SIZE	CFM ADJUST PIN SELECT	LO PIN			NOM PIN			HI PIN		
	EXTERNAL STATIC PRESSURE RANGE	0.0–0.39	0.4–0.69	0.7–1.0	0.0–0.39	0.4–0.69	0.7–1.0	0.0–0.39	0.4–0.69	0.7–1.0
024	COOLING	745	675	—	835	750	690	940	880	815
	COOLING DEHUMIDIFY	675	625	—	675	650	600	755	730	705
030	COOLING	940	860	785	1020	965	895	1185	1100	1010
	COOLING DEHUMIDIFY	820	785	735	820	800	770	955	920	880
036	COOLING	1025	935	—	1145	1085	1005	1320	1260	1180
	COOLING DEHUMIDIFY	925	885	—	925	900	870	1060	1040	1010

48XP COOLING DRY COIL ECM AIRFLOW—LARGE CABINET

UNIT SIZE	CFM ADJUST PIN SELECT	LO PIN	NOM PIN	HI PIN
	EXTERNAL STATIC PRESSURE RANGE	0.1–1.0	0.1–1.0	0.1–1.0
042	COOLING	1100	1225	1410
	COOLING DEHUMIDIFY	980	980	1125
048	COOLING	1260	1400	1610
	COOLING DEHUMIDIFY	1120	1120	1290
060	COOLING	1540	1700	1920
	COOLING DEHUMIDIFY	1360	1360	1535

48XP HEATING ECM AIRFLOW—SMALL CABINET

EASY SELECT™ BOARD SETTING (CFM)		700			800			1100			1250		
UNIT SIZE	EXTERNAL STATIC PRESSURE	0.0–0.39	0.4–0.69	0.7–1.0	0.0–0.39	0.4–0.69	0.7–1.0	0.0–0.39	0.4–0.69	0.7–1.0	0.0–0.39	0.4–0.69	0.7–1.0
	GAS HEAT SIZE												
024	040	—	—	—	855	770	710	—	—	—	—	—	—
	060	—	—	—	—	—	—	1020	890	835	—	—	—
030	040	—	—	—	880	840	805	—	—	—	—	—	—
	060	—	—	—	—	—	—	1030	970	910	—	—	—
036	060	—	—	—	—	—	—	1035	995	955	—	—	—
	090	—	—	—	—	—	—	—	—	—	1170	1110	1025

48XP HEATING ECM AIRFLOW—LARGE CABINET

EASY SELECT™ BOARD SETTING (CFM)		1000	1250	1600	1750	1800
UNIT SIZE	EXTERNAL STATIC PRESSURE	0.0–1.0	0.0–1.0	0.0–1.0	0.0–1.0	0.0–1.0
	GAS HEAT SIZE					
042	060	1000	—	—	—	—
	090	—	1250	—	—	—
048	090	—	1250	—	—	—
	115	—	—	1600	—	—
	130	—	—	—	1750	—
060	090	—	1250	—	—	—
	115	—	—	1600	—	—
	130	—	—	—	—	1800

ECONOMIZER/1-IN. FILTER PRESSURE DROP (in. wg)

UNIT 48XP	PRESSURE DROP
024-036	0.20
042-060	0.25

48XP ECM AIRFLOW VS TEMPERATURE RISE CHART

UNIT	COOLING SIZE	RATED GAS INPUT RATE (X 1000)	AIRFLOW SETTING EAST SELECT™ (SCFM)	CALCULATED TEMPERATURE RISE	MIN. TEMP RISE	MAX TEMP RISE	MAX DISCH. TEMP
48XP	024	40	800	36.5	20	50	175
48XP	024	60	1100	40	35	65	165
48XP	030	40	800	36.5	20	50	175
48XP	030	60	1100	40	35	65	165
48XP	036	60	1100	40	25	55	165
48XP	036	90	1200	54	45	75	175
48XP	042	60	1000	44	20	50	165
48XP	042	90	1250	53	35	65	170
48XP	048	90	1250	53	25	55	165
48XP	048	115	1600	53	35	65	170
48XP	048	130	1750	54	40	70	175
48XP	060	90	1600	41	25	55	155
48XP	060	115	1600	53	35	65	170
48XP	060	130	1800	53	40	70	175

HIGH ALTITUDE COMPENSATION

NATURAL GAS ONLY

ORIFICE CONVERSION — 3.5 in. wc MANIFOLD PRESSURE*

ALTITUDE (ft)	INPUT (Btuh)	OUTPUT (Btuh)	ORIFICE NUMBER†
0-2000	40,000	31,000	#44
	60,000	46,000	#38
	90,000	70,000	#38
	115,000	92,000	#33
	130,000	103,000	#31
2001-6000	32,075	24,858	#48
	48,547	37,219	#42
	72,820	56,638	#42
	90,094	72,075	#37
	102,630	81,315	#34

LIQUID PROPANE ONLY

ORIFICE CONVERSION — 3.5 in. wc MANIFOLD PRESSURE*

ALTITUDE (ft)	INPUT (Btuh)	OUTPUT (Btuh)	ORIFICE NUMBER†
0-2000	40,000	31,000	#50
	57,000	43,720	#46
	85,500	66,520	#46
	115,000	92,000	#42
	127,000	100,580	#41
2001-6000	33,834	26,221	#52
	49,238	37,766	#48
	73,856	57,461	#48
	94,571	75,657	#44
	101,284	80,214	#43

* As the height above sea level increases, there is less oxygen per cubic ft of air. Therefore, heat input rate should be reduced at higher altitudes.

† Orifices available through your Carrier distributor.

48XP ECM WET COIL PRESSURE DROP (in. wg)

	STANDARD CFM															
UNIT SIZE	600	700	800	900	1000	1100	1200	1300	1400	1500	1600	1700	1800	1900	2000	2100
024	0.005	0.007	0.010	0.012	0.015	—	—	—	—	—	—	—	—	—	—	—
030	—	0.007	0.010	0.012	0.015	0.018	0.021	0.024	—	—	—	—	—	—	—	—
036	—	—	—	0.019	0.023	0.027	0.032	0.037	0.042	0.047	—	—	—	—	—	—
042	—	—	—	—	0.014	0.017	0.020	0.024	0.027	0.031	0.035	0.039	0.043	—	—	—
048	—	—	—	—	—	—	0.027	0.032	0.036	0.041	0.046	0.052	0.057	0.063	0.068	—
060	—	—	—	—	—	—	—	—	—	0.029	0.032	0.036	0.040	0.045	0.049	0.053

Typical piping and wiring

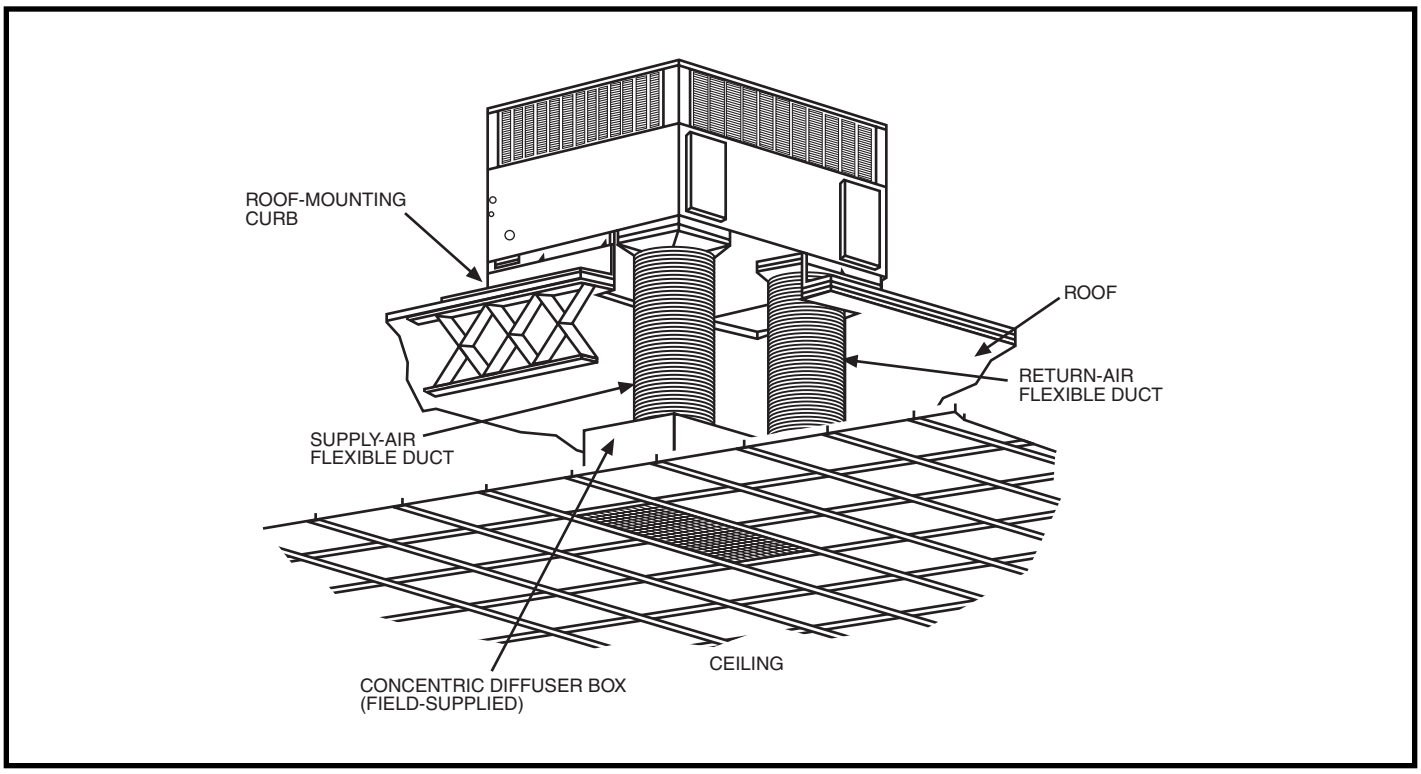

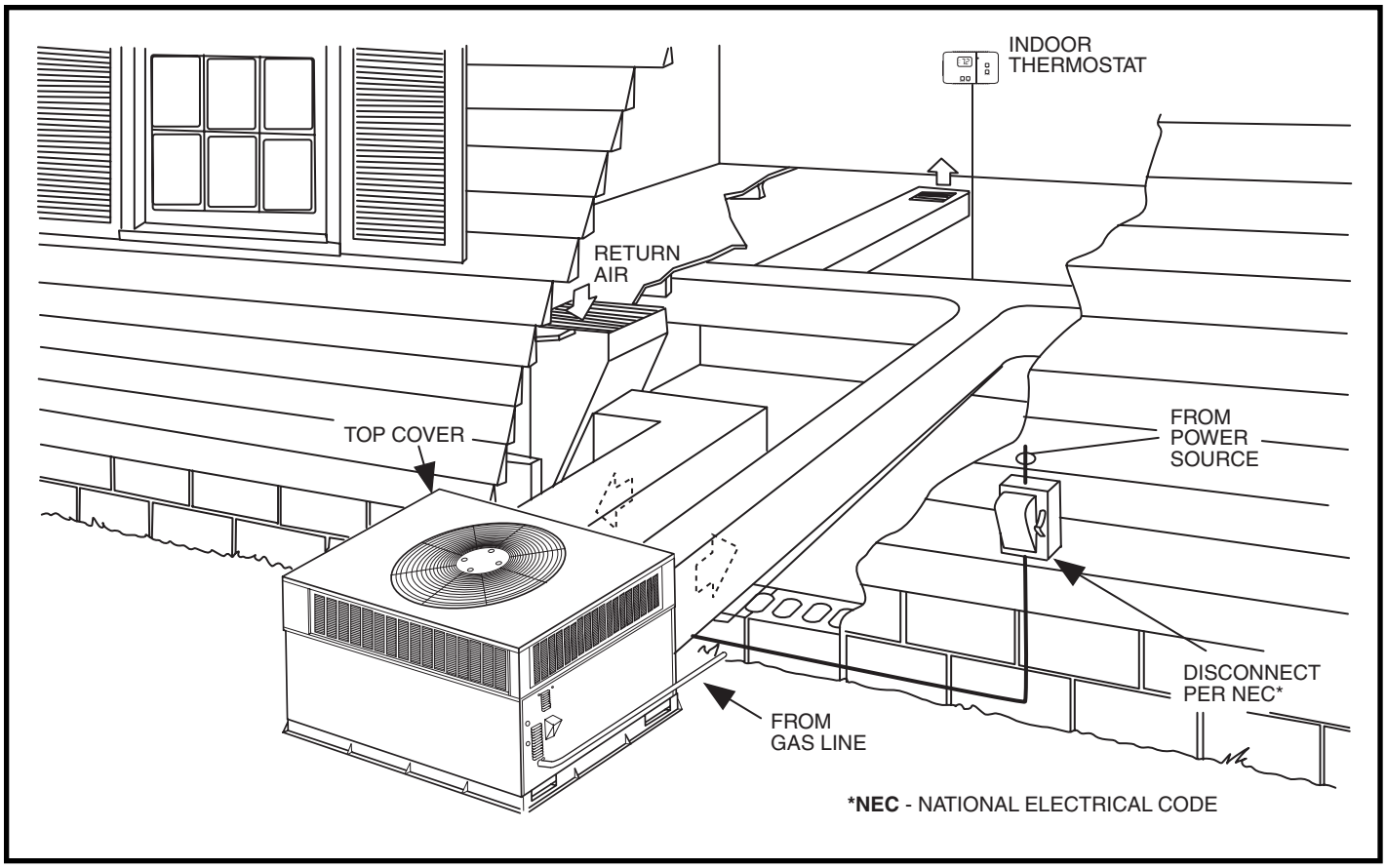

Application data

Condensate trap — A 2-in. condensate trap must be field supplied.

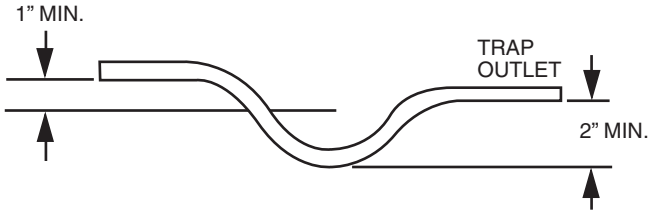

Ductwork — Secure downflow discharge ductwork to roof curb. For horizontal discharge applications, attach ductwork to unit with flanges.

To convert a unit to downflow discharge — Units are equipped with factory-installed inserts in the down-flow openings. Removal of the inserts is similar to removing an electrical knock-out. The unit is factory equipped with duct covers to seal the horizontal discharge openings in the unit. Units installed in horizontal discharge orientation do not require duct covers.

Maximum cooling airflow — To minimize the possibility of condensate blow-off from the evaporator, airflow through the units should not exceed 450 cfm per ton.

Minimum cooling airflow — The minimum airflow is 350 cfm per ton for cooling mode. Airflow can be lower in certain modes when humidity removal is an issue.

Minimum operating outdoor air temperature — All standard units have a minimum outdoor air operating temperature of 55°F. With accessory low ambient temperature kit, units can operate at temperatures down to 0°F.

Maximum cooling operating outdoor air temperature is 125°F.

Electrical data

48XP (STANDARD) ELECTRICAL DATA

UNIT SIZE 48XP	V-PH-Hz	VOLTAGE RANGE		COMPRESSOR		OUTDOOR FAN MOTOR	INDOOR FAN MOTOR	POWER SUPPLY	
		Min	Max	RLA	LRA	FLA	FLA	MCA	MAX FUSE OR BKR
024	208/230–1–60	187	253	13.5	61.0	0.8	4.3	22.0/22.0	30/30
030	208/230–1–60	187	253	15.9	73.0	0.8	4.3	25.0/25.0	30/30
036	208/230–1–60	187	253	16.9	83.0	0.8	6.8	28.7/28.7	35/35
	208/230–3–60	187	253	12.2	77.0	0.8	6.8	22.9/22.9	30/30
042	208/230–1–60	187	253	22.4	105.0	0.8	6.8	35.6/35.6	45/45
	208/230–3–60	187	253	15.4	88.0	0.8	6.8	26.9/26.9	35/35
048	208/230–1–60	187	253	21.3	109.0	1.6	6.8	35.0/35.0	45/45
	208/230–3–60	187	253	14.7	91.0	1.6	6.8	26.8/26.8	35/35
060	208/230–1–60	187	253	27.0	145.0	1.6	9.1	44.5/44.5	60/60
	208/230–3–60	187	253	19.2	137.0	1.6	9.1	33.3/33.3	40/40

LEGEND

FLA — Full Load Amps
LRA — Locked Rotor Amps
MCA — Minimum Circuit Amps
MOCP — Maximum Overcurrent Protection
RLA — Rated Load Amps

*Heater capacity (KW) based on heater voltage of 208v, 240v, & 480v. If power distribution voltage to unit varies from rated heater voltage, heater KW will vary accordingly.

NOTES:

1. In compliance with NEC (National Electrical Code) requirements for multimotor and combination load equipment (refer to NEC Articles 430 and 440), the overcurrent protective device for the unit shall be Power Supply fuse. The CGA (Canadian Gas Association) units may be fuse or circuit breaker.
2. Minimum wire size is based on 60 C copper wire. If other than 60 C wire is used, or if length exceeds wire length in table, determine size from NEC.
3. Unbalanced 3-Phase Supply Voltage
   Never operate a motor where a phase imbalance in supply voltage is greater than 2%. Use the following formula to determine the percentage of voltage imbalance.

   % Voltage imbalance

$$= 100 \times \frac{\text{max voltage deviation from average voltage}}{\text{average voltage}}$$

EXAMPLE: Supply voltage is 460-3-60.

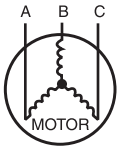

AB = 452 v
BC = 464 v
AC = 455 v

$$\text{Average Voltage} = \frac{452 + 464 + 455}{3} = \frac{1371}{3} = 457$$

Determine maximum deviation from average voltage.
(AB) 457 452 = 5 v
(BC) 464 457 = 7 v
(AC) 457 455 = 2 v

Maximum deviation is 7 v.

Determine percent of voltage imbalance.

$$\text{\% Voltage Imbalance} = 100 \times \frac{7}{457} = 1.53\%$$

This amount of phase imbalance is satisfactory as it is below the maximum allowable 2%.

IMPORTANT: If the supply voltage phase imbalance is more than 2%, contact your local electric utility company immediately.

Typical wiring schematic—208/230-1-60

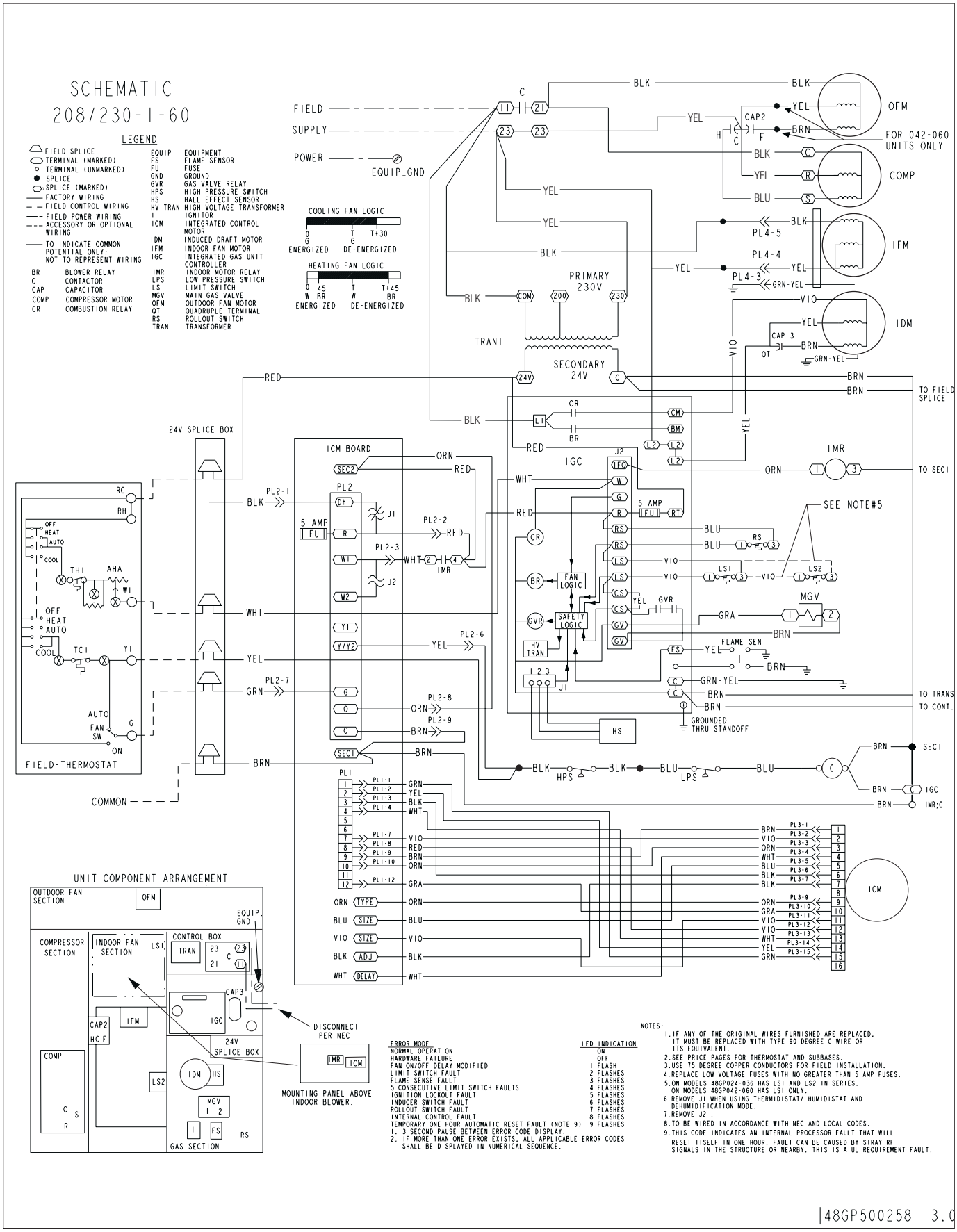

Typical wiring schematic—208/230-3-60

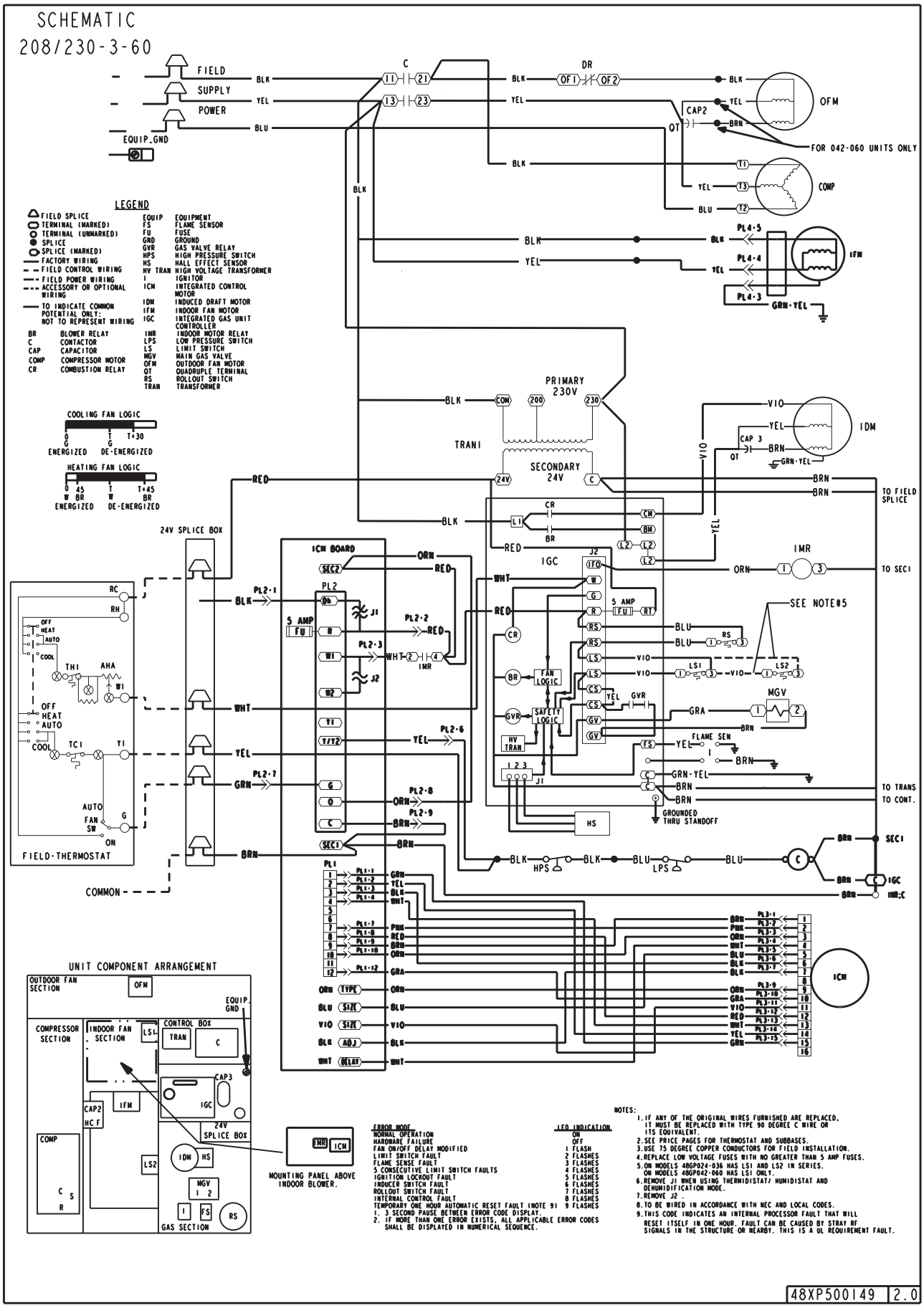

C03025

Controls

Operating sequence

Heating — On a call for heating, terminal "W" of the thermostat is energized, starting the induced-draft motor. When the hall-effect sensor on the induced-draft motor senses that it has reached the required speed, the burner sequence begins. This function is performed by the integrated gas control (IGC). The evaporator fan motor is energized 45 seconds after flame is established. When the thermostat is satisfied and "W" is de-energized, the burners stop firing and the evaporator fan motor shuts off after a preselected time-off delay.

Cooling — When the room temperature rises to a point that is slightly above the cooling control setting of the thermostat, the thermostat completes the circuit between thermostat terminal R to terminals Y and G. These completed circuits through the thermostat connect contactor coil (C) (through unit wire Y) and blower relay coil (BR) (through unit wire G) across the 24-v secondary of transformer (TRAN).

The normally open contacts of energized contactor (C) close and complete the circuit through compressor motor (COMP) to condenser (outdoor) fan motor (OFM). Both motors start instantly.

The indoor blower will cycle on and off with a call for cooling per the on/off delay profile selected on the easy select™ circuit board.

NOTE: Once the compressor has started and then has stopped, it should not be started again until 5 minutes have elapsed.

The cooling cycle remains "on" until the room temperature drops to a point that is slightly below the cooling control setting of the room thermostat. At this point, the thermostat "breaks" the circuit between thermostat terminal R to terminals Y and G. These open circuits de-energize contactor coil C and relay coil BR. The condenser and compressor motors stop. After a preselected delay, the blower motor stops. The unit is in a "stand-by" condition, waiting for the next "call for cooling" from the room thermostat.

The ECM indoor blower operation with a call for fan operation (G) in the cooling mode will perform by the on/off delay profile selected on the Easy Select™ circuit board.

Guide specifications

Packaged Gas Heating/Electric Cooling Units Constant Volume Application

HVAC Guide Specifications

Size Range: **2 to 5 Tons, Nominal Cooling 40,000 to 130,000 Btuh, Nominal Heating Input**

Carrier Model Number: **48XP**

Part 1 — General

1.01 SYSTEM DESCRIPTION

Outdoor rooftop mounted, gas heating/electric cooling unit utilizing a scroll compressor for cooling duty. Unit shall discharge supply air vertically or horizontally as shown on contract drawings. Condenser fan/coil section shall have a draw-thru design with vertical discharge for minimum sound levels.

1.02 QUALITY ASSURANCE

A. Unit shall be rated in accordance with ARI Standards 210/240-94 and 270-95.
B. Unit shall be designed in accordance with UL Standard 1995.
C. Unit shall be manufactured in a facility registered to ISO 9001 manufacturing quality standard.
D. Unit shall be UL listed and certified under Canadian Standards as a total package for safety requirements.
E. Roof curb shall be designed to conform to NRCA Standards.
F. Insulation and adhesives shall meet NFPA 90A requirements for flame spread and smoke generation.
G. Cabinet insulation shall meet ASHRAE Standard 62P.

1.03 DELIVERY, STORAGE AND HANDLING

Unit shall be stored and handled per manufacturer's recommendations.

Part 2 — Products

2.01 EQUIPMENT

A. General:
Factory-assembled, single-piece, heating and cooling unit. Contained within the enclosure shall be all factory wiring, piping, controls, refrigerant charge with R-410A refrigerant, and special features required prior to field start-up.

B. Unit Cabinet:
1. Unit Cabinet shall be constructed of phosphated, zinc-coated, pre-painted steel capable of withstanding 500 hours in salt spray.
2. Normal service shall be through a single removable cabinet panel.
3. The unit shall be constructed on a rust proof basepan that has an externally trapped, integrated sloped drain pan.
4. Evaporator fan compartment top surface shall be insulated with a minimum 1/2-in. thick, flexible fiberglass insulation, coated on the air side and retained by adhesive and mechanical means. The evaporator wall sections will be insulated with a minimum semi-rigid foil-faced board capable of being wiped clean. Aluminum foil-faced fiberglass insulation shall be used in the entire indoor air cavity section.
5. Unit shall have a field-supplied condensate trap.

C. Fans:
1. The evaporator fan shall be direct-drive variable speed motor and control, as shown on equipment drawings.
2. Fan wheel shall be made from steel, be double-inlet type with forward curved blades with corrosion resistant finish and be dynamically balanced.
3. Condenser fan shall be direct drive propeller type with aluminum blades riveted to corrosion resistant steel spiders, be dynamically balanced, and discharge air vertically.

D. Compressor:
1. Fully hermetic compressors with factory-installed vibration isolation.
2. Scroll compressors shall be standard on all units.

E. Coils:
Evaporator and condenser coils shall have aluminum plate fins mechanically bonded to seamless copper tubes with all joints brazed (copper/copper and vinyl-coated construction available as factory-installed option). Tube sheet openings shall be belled to prevent tube wear.

F. Heating Section:
1. Induced-draft combustion type with energy saving direct spark ignition system and redundant main gas valve.
2. Induced-draft motors shall be provided with solid-state *hall-effect* sensor to ensure adequate airflow for combustion.
3. The heat exchangers shall be constructed of aluminized steel for corrosion resistance.
4. Burners shall be of the in-shot type constructed of aluminum coated steel.
5. All gas piping and electric power shall enter the unit cabinet at a single location.

G. Refrigerant Components:
Refrigerant expansion device shall be of the TXV (thermostatic expansion valve) type.

H. Filters:
Filter section shall consist of field-installed, throwaway, 1-in. thick fiberglass filters of commercially available sizes.

I. Controls and Safeties:
1. Unit controls shall be complete with a self-contained low voltage control circuit.
2. Compressors shall incorporate a solid-state compressor protector that provides reset capability.
3. Unit shall provide high and loss-of-charge/low pressure safety protection.

J. Operating Characteristics:
1. Unit shall be capable of starting and running at 125°F ambient outdoor temperature, exceeding maximum load criteria of ARI Standard 210.

2. Compressor with standard controls shall be capable of operation down to 55° F ambient outdoor temperature.
3. Units shall be provided with fan time delay to prevent cold air delivery before the heat exchanger warms up.
4. Indoor fan off delay for cooling is selected on Easy Select™ board.

K. Electrical Requirements:
All unit power wiring shall enter the unit cabinet at a single location.

L. Motors:
1. Compressor motors shall be of the refrigerant-cooled type with line-break thermal and current overload protection.
2. All fan motors shall have permanently lubricated bearings, and inherent, automatic reset, thermal overload protection.
3. Condenser fan motor shall be totally enclosed.

M. Grille:
1. Louvered Grille:
Louvered grille shall be factory-installed to provide hail guard and vandalism protection.

N. Duct Conversion:
Shall be available with the use of included duct covers.

O. Special Features Available:
1. Coil Options:
Shall include factory-installed optional tin plated indoor, copper/copper and vinyl-coated refrigerant coils.
2. Economizer:
   a. Economizer controls capable of providing free cooling using outside air.
   b. Equipped with low leakage dampers not to exceed 3% leakage, at 1.0 in. wg pressure differential.
   c. Spring return motor shuts off outdoor damper on power failure.
3. Flat Roof Curb:
Curbs shall have seal strip and a wood nailer for flashing and shall be installed per manufacturer's instructions.
4. Manual Outdoor Air Damper:
Package shall consist of damper, birdscreen, and rainhood which can be preset to admit outdoor air for year-round ventilation.
5. Thermostat:
To provide for one-stage heating and cooling in addition manual or automatic changeover and indoor fan control.
6. Natural-to-Propane Conversion Kit:
Shall be complete with all required hardware to convert to liquid propane (LP) operation at 3.5 in. wg manifold pressure.
7. Low Ambient Package:
Shall consist of a solid-state control and condenser coil temperature sensor for controlling condenser-fan motor operation, which shall allow unit to operate down to 0° F outdoor ambient temperature.
8. Filter Rack Kit:
Shall provide filter mounting for downflow or horizontal applications.
9. Square-To-Round Duct Transitions: (024–048)
Shall have the ability to convert the supply and return openings from rectangular to round.
10. Compressor Protection (Time Guard® II Kit)
Solid-state control shall protect compressor by preventing "short cycling."
11. Crankcase Heater:
Shall provide anti-floodback protection for low-load cooling applications.
12. High Altitude Kit:
Shall consist of natural gas orifices to compensate for gas heat operation at 2001 to 6000 ft above sea level.
13. Low NO_x (Natural Gas only) option:
Shall provide NO_x reduction to values below 40 nanograms/joule to meet California emission requirements.
14. Compressor Hard Start Kit:
Shall provide additional starting torque for single-phase compressors (Single phase only).