**PERFORMANCE™ 93**

**MODEL 58MTB 4-WAY MULTIPOISE DIRECT TWO-STAGE CONDENSING GAS FURNACE**

Input Rates: 60,000 thru 120,000 Btuh

Carrier®

Turn to the Experts.℠

# Product Data

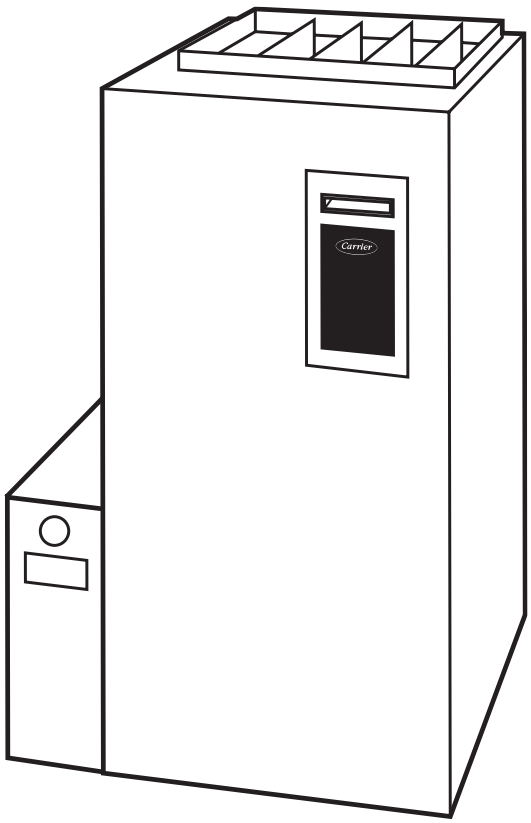


A05069

## 4-Way Multipoise Design Allows More Applications . . .

The Performance™ 93 is a must for your product line. This high-efficiency furnace allows more applications with its reliable 4-way multipoise design. The Performance™ 93 is available in 6 heat/airflow combinations and with the 4-way multipoise design can be installed in upflow, downflow, or horizontal positions. The furnace is factory configured for upflow application. The versatility of this furnace is further enhanced by its dual venting capability. The Performance™ 93 can be installed as 1-pipe/Non-Direct vent or 2-pipe/Direct Vent.

This versatile unit utilizes hot surface ignition (HSI) which ignites the burners directly. HSI eliminates gas waste that typical continuous-pilot designs can bring. Hot surface ignition provides reliable start-up and operation.

Take a look at the control center on the Performance™ 93. Control of ignition, inducer, and blower operation is all handled in 1 central printed circuit board. The status indicator on the control signals when an event has occurred and identifies where the event is. This, along with the component test feature, makes the Performance™ 93 one of the easiest gas furnaces to troubleshoot.

A unique feature of this unit is the patented polypropylene-laminated heat exchanger. This secondary heat exchanger ensures that all available heat is properly transferred to the airstream and throughout the home. Using the exclusive flow-through design, the secondary heat exchanger reduces the pressure drop in the furnace which leads to lower electrical usage, an important part of this unit's efficiency.

When we put it all together, the Performance™ 93 combines quality and design to bring high efficiency and comfort. You will enjoy the versatility and ease of installation of this unit. The Performance™ 93 is equipped for either left- or right-side connections. Blower speeds are easily adjustable with speed-taps conveniently located on the control center. A more efficient combustion inducer allows for more use of 2-in. vent and combustion-air piping, keeping installation costs low.

As with other Carrier furnaces, this model is designed to work as a part of the total home comfort system which includes elements for cooling, air cleaning, humidification, ventilation, and zoning.

## THE PERFORMANCE™ 93 FEATURES/BENEFITS

**ComfortHeat™ Technology**—The Performance™ 93 has a 2-stage gas valve to vary the amount of gas being used from low-heat to high-heat stage. The low-stage operation allows longer running periods, which helps maintain your most comfortable temperature, prevents drafts, reduces noise, and enhances the air quality of your home. During the extreme cold, the high-heat levels will run to ensure that you are still comfortable.

**Primary Heat Exchanger & Serpentuff™ Secondary Heat Exchanger** — The primary heat exchanger is corrosion resistant and maintains a proven track record for long-term reliability and high-efficiency performance. The secondary heat exchanger is built with a patented lamination process that bonds a corrosion-proof lining of polypropylene to a heavy, galvanized steel shell. The unique secondary clamshell design allows wider spacing between cells for reduced air resistance through the furnace, reduced load on the blower motor, and reduced need for cleaning.

**Power Heat™ Igniter** — Carrier's unique SiN igniter is not only physically robust but it is also electrically robust. It is capable of running at line voltage and does not require complex voltage regulators as do other brands. This unique feature further enhances the reliability of Performance™ 93 gas furnace and continues Carrier's tradition of technology leadership and innovation in providing a reliable and durable product.

**ComfortFan™** — Improves comfort all year long by allowing the homeowner to select different fan speeds during continuous fan operation to achieve more or less airflow. This is done right at the thermostat.

**SmartEvap™** — This feature allows your system to reduce summer time humidity levels by nearly 10% over standard systems.

**Media Filter Cabinet** — Enhanced indoor air quality in your home is made easier with our media filter cabinet—a standard accessory on all furnaces. When installed as a part of your system, this cabinet allows for an easy and convenient addition of a Carrier high-efficiency air filter.

**Adaptive Logic Control Board** — This self-adjusting control board contains a microprocessor which automatically calculates the precise amount of time your furnace should run and whether it should run in low-heat or high-heat operation to obtain the best comfort and energy efficiency. This control board also includes an extensive troubleshooting and component test sequence that can monitor your heating system to ensure that it is operating properly.

**4-Way Multipoise Design** — Allows the Performance™ 93 to be installed in an upflow, downflow, or horizontal orientation. Factory configured for upflow applications with only simple drain connection changes required for conversion to downflow or horizontal.

**Direct or Non-Direct Venting** — The Performance™ 93 can be installed as a 1 pipe/Non-Direct vent or 2 pipe/Direct vent furnace. This provides added flexibility to meet diverse installation needs.

**Two-Speed Inducer Motor** — This motor works with the inducer fan to optimize combustion efficiency and exhaust the flue gases out of the house. The motor has two speeds and an incorporated fan to keep the motor cool while reducing sound.

**Permanent split capacitor (PSC) Blower Motor** — The Performance™ 93 has a PSC blower motor that has several preselected fixed speeds which can be customized to duct work installation requirements. The motor has a wide application of use, a basic control scheme, and is extremely reliable.

**Full Cabinet Insulation** — This insulation completely surrounds the internal furnace casing allowing for reduced and dampened sounds and maintained efficiencies.

**Soft Motor Mounts** — These motor mounts help to absorb shock, decrease the vibration of the motor, and minimize noise.

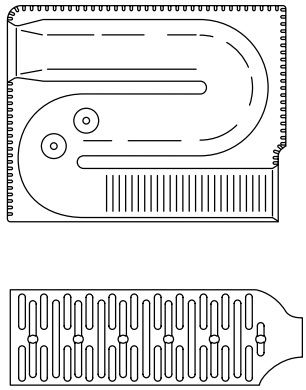

A92505

**HEAT EXCHANGERS**

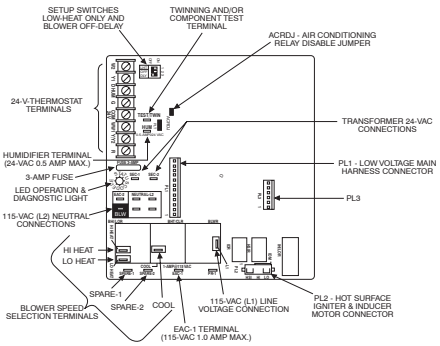


A02017

**CONTROL CENTER**

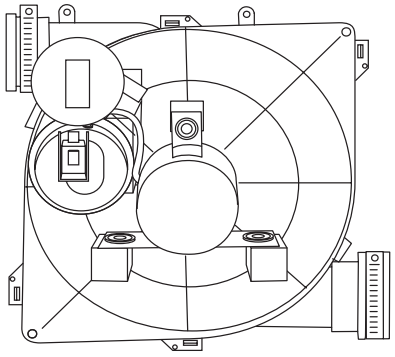

A01160

**INDUCER ASSEMBLY**

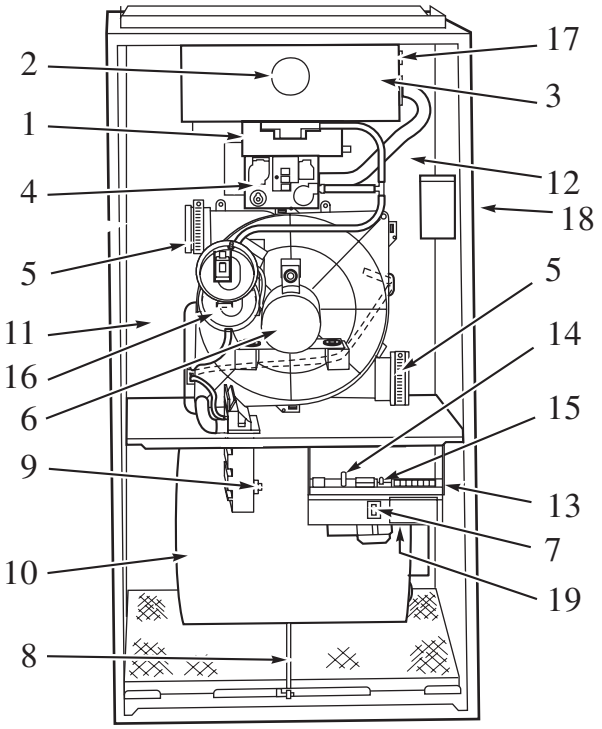


1. Combustion-air intake connection to ensure contaminant-free air (right or left side).
2. Burner sight glass for viewing burner flame.
3. Burner assembly (inside). Operates with inshot burners and hot surface igniter for safe, dependable heating.
4. Redundant gas valve. Safe, efficient gas control.
5. Vent outlet. Uses PVC pipe to carry vent gases from the furnaces combustion system (right or left side).
6. Inducer motor. Pulls hot flue gases through the heat exchangers, maintaining negative pressure for added safety.
7. Blower access panel safety interlock switch.
8. Air filter and retainer.
9. Condensate drain connection. Collects moisture condensed from burned gases for disposal into home drain system.
10. Heavy-duty blower. Circulates air across the heat exchangers to transfer heat into the home.
11. Secondary condensing heat exchanger (inside). Wrings out more heat through condensation. Constructed with Polypropylene-laminated steel to ensure durability.
12. Primary serpentine heat exchanger (inside). Stretches fuel dollars with the S-shaped heat-flow design. Solid construction of corrosion-resistant aluminized steel means reliability.
13. ComfortHeat™ control center.
14. 3-amp fuse provides electrical and component protection.
15. Light emitting diode (LED) on control center. Code lights are for diagnosing furnace operation and service requirements.
16. Pressure switch(es) ensure adequate flow of flue products through furnace and out vent system.
17. Rollout switch (manual reset) to prevent overtemperature.
18. Junction box for 115-v electrical power supply. (May be on right or left side)
19. Transformer (24v) behind control center provides low-voltage power to furnace control center and thermostat.

# Model number nomenclature

**58MTB 060 F 100 12**

**Deluxe 4-Way Multipoise 2-Stage Direct - Vent (2-Pipe) and Non-Direct Vent (1-Pipe) Condensing Gas Furnace**

**Cooling Airflow**
(Nominal 400 CFM per 12,000 Btuh Cooling)
12 — 1200 CFM
16 — 1600 CFM
20 — 2000 CFM

**Input Rates (Low/High)**
060 — 39,000/60,000 Btuh
080 — 52,000/80,000 Btuh
100 — 65,000/100,000 Btuh
120 — 78,000/120,000 Btuh

**Series**

**Media Filter Cabinet included**



MEETS DOE RESIDENTIAL CONSERVATION SERVICES PROGRAM STANDARDS

Before purchasing this appliance, read important energy cost and efficiency information available from your retailer.

As an ENERGY STAR® Partner, Carrier Corporation has determined that this product meets the ENERGY STAR® guidelines for energy efficiency.

ISO 9001:2000

**REGISTERED QUALITY SYSTEM**

These products are engineered and manufactured under an ISO 9001 registered quality system.

# Physical data

| UNIT SIZE | 060-12 | 080-12 | 080-16 | 100-16 | 100-20 | 120-20 |
|---|---|---|---|---|---|---|
| DIRECT-DRIVE MOTOR Hp (PSC) | 1/3 | 1/3 | 1/2 | 1/2 | 3/4 | 3/4 |
| MOTOR FULL LOAD AMPS | 5 | 5 | 7.4 | 7.9 | 11 | 11 |
| RPM (Nominal) — SPEEDS | 1075—5 | 1075—5 | 1075—5 | 1075—4 | 1075—5 | 1075—5 |
| BLOWER WHEEL DIAMETER X WIDTH (In.) | 10 x 7 | 10 x 7 | 11 x 8 | 11 x 8 | 11 x 10 | 11 x 10 |
| FILTER SIZE (In.) — (Washable) | (1) 16 x 25 x 1 | | | (1) 20 x 25 x 1 | | (1) 24 x 25 x 1 |
| SHIPPING WEIGHT (Lb) | 189 | 200 | 205 | 231 | 234 | 262 |
| LIMIT CONTROL | SPST | | | | | |
| HEATING BLOWER CONTROL (Off Delay) | Selectable 90, 120, 150, or 180 | | | | | |
| BURNERS (Monoport) | 3 | 4 | 4 | 5 | 5 | 6 |
| GAS CONNECTION SIZE | 1/2-in. NPT | | | | | |
| GAS VALVE (Redundant) Manufacturer | White-Rodgers | | | | | |
| Minimum Inlet Pressure (In. wc) | 4.5 (Natural Gas) | | | | | |
| Maximum Inlet Pressure (In. wc) | 13.6 (Natural Gas) | | | | | |
| IGNITION DEVICE | Hot Surface | | | | | |

PSC—Permanent Split Capacitor

# Carrier accessories*

| UNIT SIZE | 060-12 | 080-12<br>080-16 | 100-16<br>100-20 | 120-20 |
|---|---|---|---|---|
| GAS CONVERSION KIT — NATURAL-TO-PROPANE | KGANP4001ALL | | | |
| GAS CONVERSION KIT — PROPANE-TO-NATURAL | KGAPN3301ALL | | | |
| TWINNING KIT | KGATW0601HSI† | | | |
| DOWNFLOW BASE (For Combustible Floors)‡ | KGASB0201ALL | | | |
| VENT TERMINATION KIT (Bracket Only for 2 Pipes) | 2-in. — KGAVT0101BRA 3-in. — KGAVT0201BRA | | | |
| CONCENTRIC TERMINATION KIT (Single Exit) | 2-in. — KGAVT0501CVT 3-in. — KGAVT0601CVT | | | |
| CONDENSATE FREEZE PROTECTION KIT | KGAHT0101CFP | | | |
| CONDENSATE NEUTRALIZER KIT (Obtained Thru RCD) | P908-0001 | | | |
| ELECTRONIC AIR CLEANER (EAC) | Model EACB | | | |
| MECHANICAL AIR CLEANER | Model EACA, EZXCAB, FILCAB | | | |
| HUMIDIFIER | Models HUM | | | |
| HEAT RECOVERY VENTILATOR | Model HRV | | | |
| ENERGY RECOVERY VENTILATOR | Model ERV | | | |
| UV LIGHTS | Model UVL | | | |
| VENT/EXHAUST PIPE EXTERNAL TRAP KIT | KGAET0106ETK | | | |
| DOOR GASKET KIT | KGBAC0110DGK | | | |

* Factory-authorized and field-installed. Gas conversion kits are CSA (A.G.A./C.G.A.) recognized.
† For 16 and 20 airflow sizes only. See kit Installation Instructions for details.
‡ Required for installation on combustible floors when no coil box is used, or when any coil box other than a Carrier cased coil is used.

# Thermostat and zoning control options

| NON-PROGRAMMABLE THERMOSTAT SELECTION | |
|---|---|
| TSTATCCNAC01-C | For use with 1-spd. Air Conditioner - deg. F/C, Auto Changeover |
| TSTATCCNHP01-C* | For use with 1-spd. Air Conditioner - deg. F/C, Auto Changeover |
| TSTATCCN2S01-C* | For use with 2-spd. Air Conditioner - deg. F/C, Auto Changeover |
| TSTATCCBAC01-B | For use with 1-spd. Air Conditioner - deg. F/C |
| TSTATCCPRH01-B** | For multi-use / stage configurations - deg. F/C, Auto Changeover/Temperature and Humidity Control |

* Model HP and 2S thermostat must be field converted to air conditioner operation.
**Thermidistat Control is versatile and can be configured for multiple use and staging, it must be configured for each specific application.

| PROGRAMMABLE THERMOSTAT SELECTION | |
|---|---|
| TSTATCCPAC01-B | For use with 1-spd. Air Conditioner - deg. F/C, Auto Changeover, 7-Day Programmable |
| TSTATCCPHP01-B* | For use with 1-spd. Air Conditioner - deg. F/C, Auto Changeover, 7-Day Programmable |
| TSTATCCP2S01-B* | For use with 2-spd. Air Conditioner - deg. F/C, Auto Changeover, 7-Day Programmable |
| TSTATCCSAC01 | For use with 1-spd. Air Conditioner - deg. F/C, 5-2 Day Programmable |
| TSTATCCPDF01-B** | For use with multi-stage applications - deg. F/C, Auto Changeover, 7-Day Programmable |
| TSTATCCPRH01-B*** | For multi-use / stage configurations - deg. F/C, Auto Changeover, 7-Day Programmable/Temperature and Humidity Control |

* Model HP and 2S thermostat must be field converted to air conditioner operation.
**Dual Fuel thermostat is used with furnace and heat pump application
***Thermidistat Control can be configured for multiple use and staging, it must be configured for each specific application.

| ZONING CONTROL SELECTION | |
|---|---|
| ZONECC32(AC/HP)01 | Weather Maker Two-Zone kit |
| ZONECC2KIT01-B | Comfort Zone II-B 2-Zone kit/Temperature and Humidity Control |
| ZONECC4KIT01-B | Comfort Zone II-B 4-Zone kit/Temperature and Humidity Control |
| ZONECC8KIT01-B | Comfort Zone II-B 8-Zone kit/Temperature and Humidity Control |

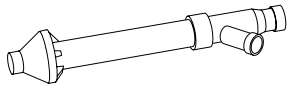

A93086

## CONCENTRIC VENT (Direct Vent/ 2-Pipe only Application)

A concentric vent kit allows vent and combustion-air pipes to terminate through a single exit in a roof or side wall.

One pipe runs inside the other allowing venting through the inner pipe and combustion air to be drawn in through the outer pipe.

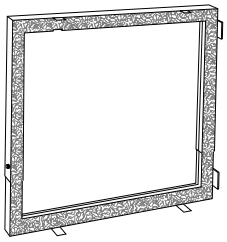

A88202

## DOWNFLOW SUBBASE

One base fits all furnace sizes. The base is designed to be installed between the furnace and a combustible floor when no coil box is used or when a coil box other than a Carrier cased coil is used. It is CSA (A.G.A./C.G.A.) design certified for use with Carrier 58MTB furnaces when installed in downflow applications.

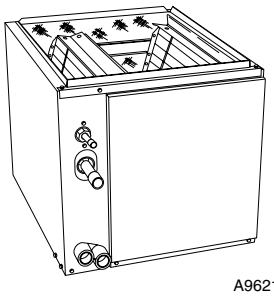

A96214

## CARRIER CASED N-COIL

**(as shown)**

The Carrier Cased N-Coil or A-Coil is an upflow/downflow furnace coil which can also replace the downflow subbase when installing the 58MTB on combustible flooring in the downflow orientation.

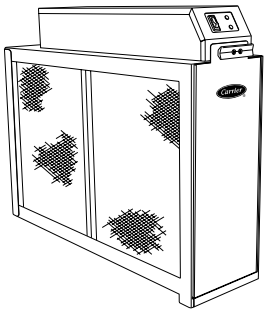

A97152

## ELECTRONIC AIR CLEANER

Cleans the air of smoke, dirt, and many pollens commonly found. Saves decorating and cleaning expenses by keeping carpets, furniture, and drapes cleaner.

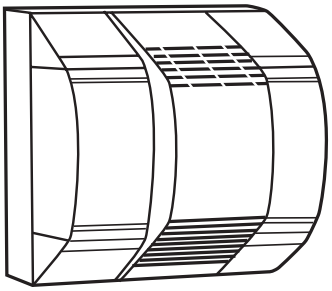

A01484

## HUMIDIFIER

By adding moisture to winter-dry air, a Carrier humidifier can often improve comfort and keeps woodwork, wallpaper, and paint in better condition. Moisturizing household air also helps to retain normal body heat and provides comfort at lower temperatures.

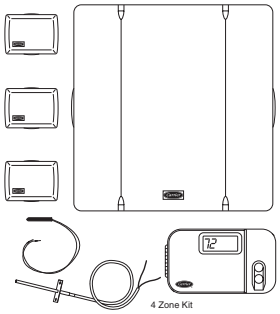


A99250

## CONTROLS: THERMOSTATS AND ZONING

Available in programmable and non-programmable models, Carrier thermostats maintain a constant, comfortable temperature level in the home.

For the ultimate in home comfort, Carrier's 2, 4 and 8-zone systems allow temperature control of individual "zones" of the home. This is accomplished through a series of electronic dampers and remote room sensors. The 4-zone system is shown.

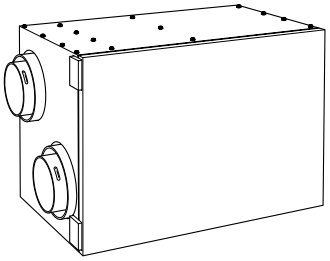

A94336

## ENERGY/HEAT RECOVERY VENTILATOR

Carrier's energy or heat recovery ventilators exhaust stale indoor air and provide fresh outdoor air to the home while minimizing heat loss and humidity level. Especially useful for today's tighter constructed houses.

Energy recovery ventilator is shown.

# Dimensions

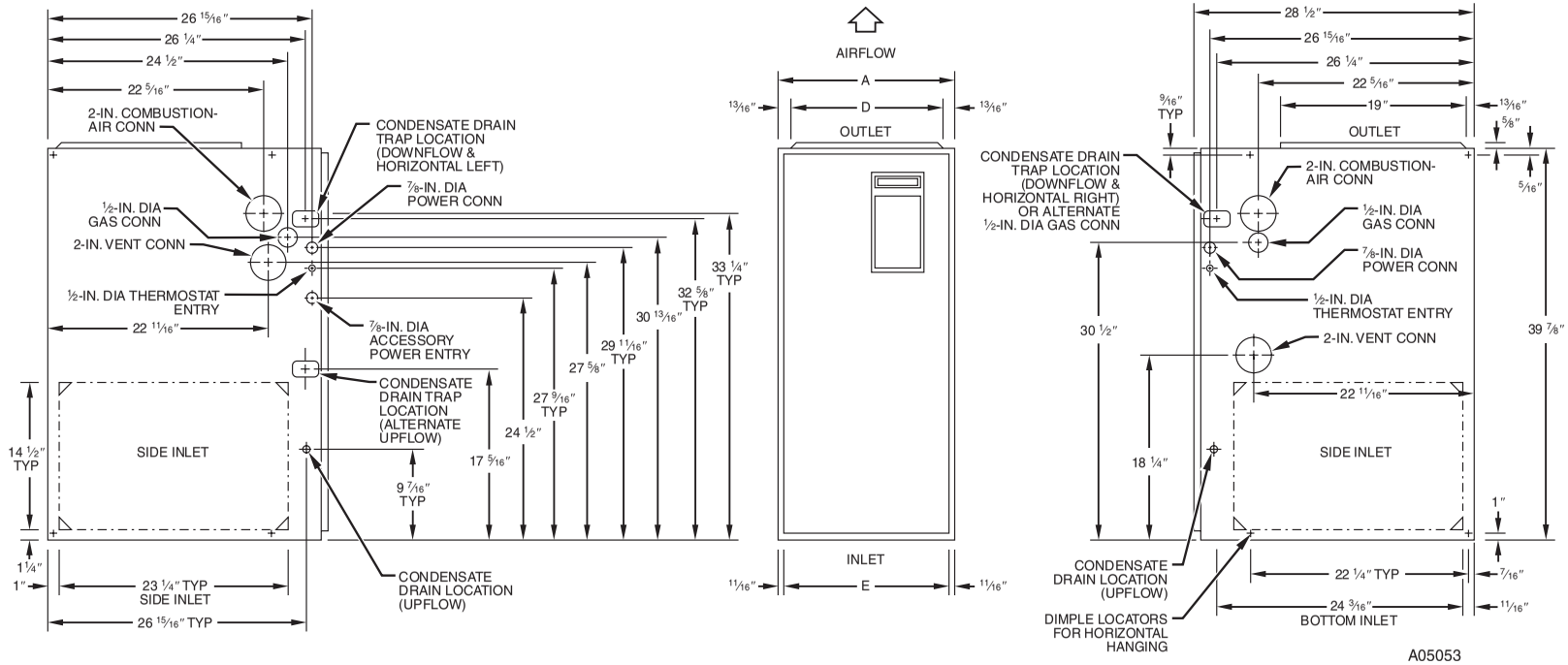


**NOTES:** 1. Minimum return-air openings at furnace, based on metal duct. If flex duct is used, see flex duct manufacturer's recommendations for equivalent diameters.

2. Minimum return-air opening at furnace:
   a. For 800 CFM–16-in. round or 14 1/2 x 12-in. rectangle.
   b. For 1200 CFM–20-in. round or 14 1/2 x 19 1/2-in. rectangle.
   c. For 1600 CFM–22-in. round or 14 1/2 x 23 1/4-in. rectangle.
   d. For airflow requirements above 1800 CFM, see Air Delivery table in Product Data literature for specific use of single side inlets. The use of both side inlets, a combination of 1 side and the bottom, or the bottom only will ensure adequate return air openings for airflow requirements above 1800 CFM at 0.5" W.C. ESP.

## DIMENSIONS (In.)

| UNIT SIZE | A | D | E |
|---|---|---|---|
| 060-12 | 17-1/2 | 15-7/8 | 16 |
| 080-12 | 17-1/2 | 15-7/8 | 16 |
| 080-16 | 17-1/2 | 15-7/8 | 16 |
| 100-16 | 21 | 19-3/8 | 19-1/2 |
| 100-20 | 21 | 19-3/8 | 19-1/2 |
| 120-20 | 24-1/2 | 22-7/8 | 23 |

## DOWNFLOW SUBBASE — DIMENSIONS (In.)

| FURNACE CASING WIDTH | FURNACE IN DOWNFLOW APPLICATION | PLENUM OPENING* | | FLOOR OPENING | | HOLE NO. FOR WIDTH ADJUSTMENT |
|---|---|---|---|---|---|---|
| | | A | B | C | D | |
| 17-1/2 | Furnace with or without Cased Coil Assembly or Coil Box | 15-1/8 | 19 | 16-3/4 | 20-3/8 | 3 |
| 21 | Furnace with or without Cased Coil Assembly or Coil Box | 18-5/8 | 19 | 20-1/4 | 20-3/8 | 2 |
| 24-1/2 | Furnace with or without Cased Coil Assembly or Coil Box | 22-1/8 | 19 | 23-3/4 | 20-3/8 | 1 |

* The plenum should be constructed 1/4 in. smaller in width and depth than the plenum dimensions shown above.

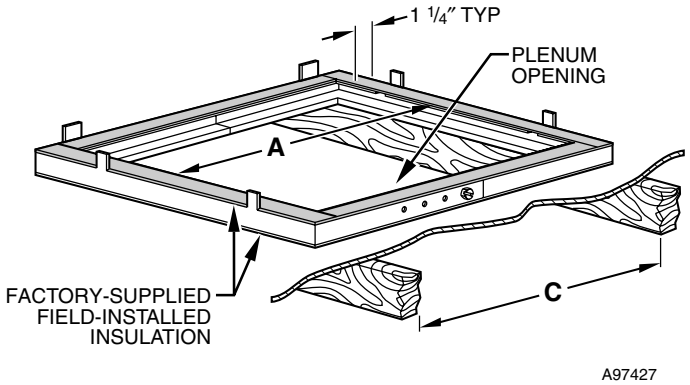


**Assembled**

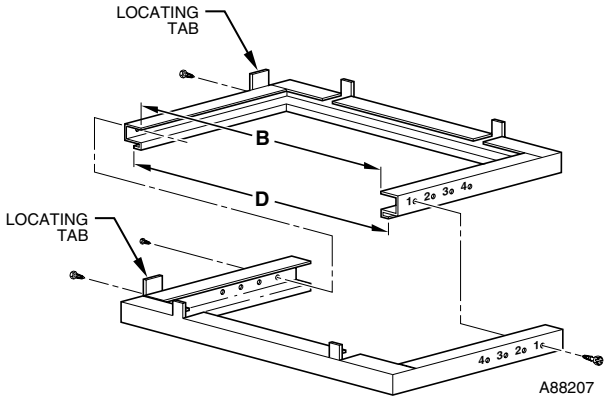


**Disassembled**

## Combustion-Air Pipe for Non-Direct Vent (1-Pipe) (Sizes 040 through 120 Only)

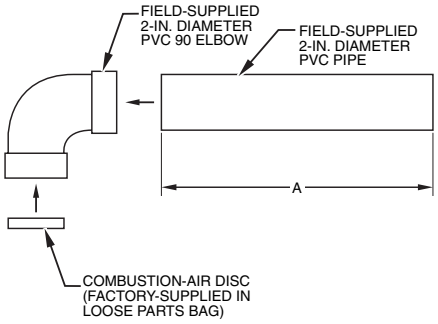


### LENGTH OF STRAIGHT PIPE PORTION OF COMBUSTION AIR INLET PIPE ASSEMBLY (IN.)

| CASING WIDTH | A |
|---|---|
| 17-1/2 | 8-1/2 ± 1/2 |
| 21 | 10-1/2 ± 1/2 |
| 24-1/2 | 12 ± 1/2 |

## Concentric Vent for Direct Vent (2-Pipe) Application (All Model Sizes)

**Note:** See furnace Installation Instructions when venting multiple furnaces near each other.

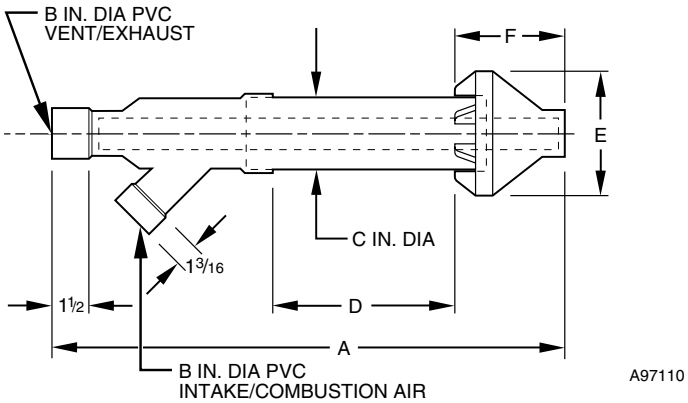


### DIMENSIONS (In.)

| KIT PART NO. | A* | B | C | D† | E | F |
|---|---|---|---|---|---|---|
| KGAVT0501CVT | 33-3/8 | 2 | 3-1/2 | 16-5/8 | 6-1/4 | 5-3/4 |
| KGAVT0601CVT | 38-7/8 | 3 | 4-1/2 | 21-1/8 | 7-3/8 | 6-1/2 |

* Dimension A will change accordingly as dimension D is lengthened or shortened.

† Dimension D may be lengthened to 60 in. maximum. Dimension D may also be shortened by cutting the pipes provided in the kit to 12 in. minimum.

## CONDENSATE TRAP

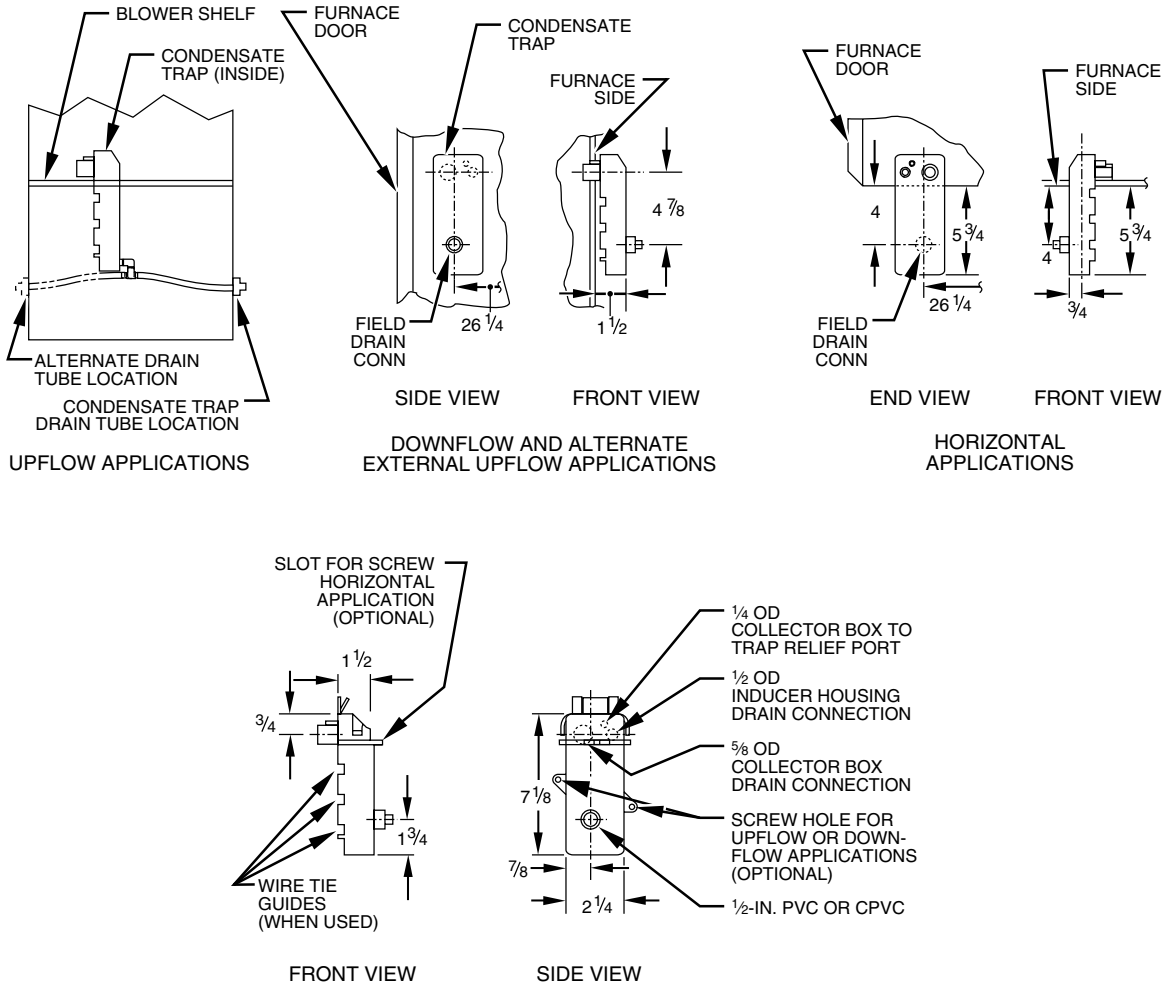


## MEDIA FILTER CABINET

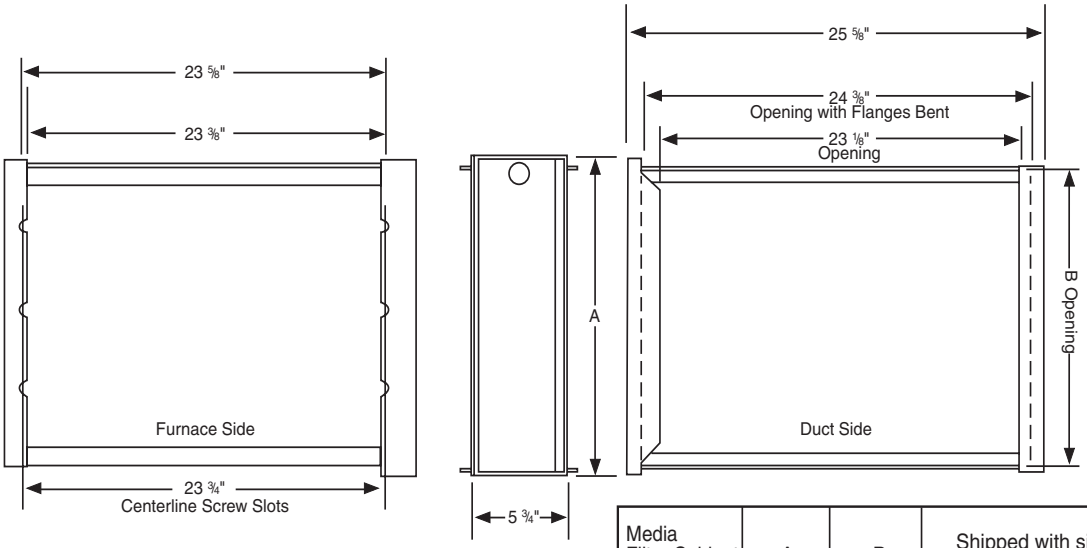


| Media Filter Cabinet | A | B | Shipped with sizes |
|---|---|---|---|
| 16" | 17" | 16" | 040-08, 040-12, 060-08, 060-12, 060-16, 080-12, 080-16 |
| 20" | 21" | 20" | 080-20, 100-16, 100-20 |
| 24" | 25" | 24" | 120-20, 140-20 |

A05186

# Performance data

| UNIT SIZE | | 060-12 | 080-12 | 080-16 | 100-16 | 100-20 | 120-20 |
|---|---|---|---|---|---|---|---|
| CERTIFIED TEMPERATURE RISE RANGE °F | Low | 20—50 | 30—60 | 30—60 | 25—55 | 30—60 | 30—60 |
| | High | 30—60 | 40—70 | 30—60 | 45—75 | 30—60 | 40—70 |
| CERTIFIED EXT STATIC PRESSURE | Heating | 0.12 | 0.15 | 0.15 | 0.20 | 0.20 | 0.20 |
| (In. wc) | Cooling | 0.50 | 0.50 | 0.50 | 0.50 | 0.50 | 0.50 |
| AIRFLOW CFM‡ | Heating Low | 680 | 790 | 775 | 1175 | 1205 | 1215 |
| | Heating High | 1010 | 1130 | 1190 | 1315 | 1795 | 1770 |
| | Cooling | 1275 | 1380 | 1565 | 1570 | 2035 | 2075 |

# Capacity

| UNIT SIZE | | | | 060-12 | 080-12 | 080-16 | 100-16 | 100-20 | 120-20 |
|---|---|---|---|---|---|---|---|---|---|
| OUTPUT CAPACITY BTUH* ICS | Direct Vent (2-Pipe) | Low | Upflow | 37,000 | 49,000 | 49,000 | 61,000 | 61,000 | 74,000 |
| (Shaded capacities are specified | | | Downflow | 37,000 | 49,000 | 49,000 | 61,000 | 61,000 | 74,000 |
| on rating plate) | | | Horizontal | 37,000 | 49,000 | 49,000 | 61,000 | 61,000 | 73,000 |
| | | High | Upflow | 56,000 | 75,000 | 75,000 | 94,000 | 94,000 | 113,000 |
| | | | Downflow | 57,000 | 75,000 | 75,000 | 94,000 | 94,000 | 113,000 |
| | | | Horizontal | 56,000 | 75,000 | 75,000 | 94,000 | 94,000 | 112,000 |
| | Non-Direct Vent (1-Pipe) | Low | Upflow | 37,000 | 49,000 | 49,000 | 61,000 | 61,000 | 73,000 |
| | | | Downflow | 37,000 | 49,000 | 49,000 | 61,000 | 61,000 | 73,000 |
| | | | Horizontal | 36,000 | 48,000 | 48,000 | 60,000 | 61,000 | 73,000 |
| | | High | Upflow | 56,000 | 75,000 | 75,000 | 94,000 | 94,000 | 112,000 |
| | | | Downflow | 56,000 | 75,000 | 75,000 | 94,000 | 94,000 | 112,000 |
| | | | Horizontal | 56,000 | 74,000 | 75,000 | 93,000 | 93,000 | 112,000 |
| INPUT BTUH† | | | Low | 39,000 | 52,000 | 52,000 | 65,000 | 65,000 | 78,000 |
| | | | High | 60,000 | 80,000 | 80,000 | 100,000 | 100,000 | 120,000 |

# AFUE%

| UNIT SIZE | | | 060-12 | 080-12 | 080-16 | 100-16 | 100-20 | 120-20 |
|---|---|---|---|---|---|---|---|---|
| AFUE% * | Direct Vent (2-Pipe) | Upflow | 93 | 93 | 93 | 93 | 93 | 93 |
| Nonweatherized ICS | | Downflow | 91.5 | 91.5 | 91.5 | 91.5 | 91.5 | 91.5 |
| | | Horizontal | 92.3 | 92.3 | 92.3 | 92.3 | 92.3 | 92.3 |
| | Non-Direct Vent (1-Pipe) | Upflow | 92.4 | 92.4 | 92.4 | 92.4 | 92.4 | 92.4 |
| | | Downflow | 91.4 | 91.4 | 91.4 | 91.4 | 91.4 | 91.4 |
| | | Horizontal | 91.4 | 91.4 | 91.4 | 91.4 | 91.4 | 91.4 |

* Capacity and AFUE in accordance with U.S. Government DOE test procedures.

† Gas input ratings are certified for elevations to 2000 ft. For elevations above 2000 ft, reduce ratings 2% for each 1000 ft above sea level. In Canada, derate the unit 5% for elevations 2000 to 4500 ft above sea level.

‡
- Airflow shown is for bottom only return-air supply with factory supplied 1-in. washable filter(s).
- For air delivery above 1800 CFM, see Air Delivery table for other options.
- An airflow reduction of up to 7% may occur when using the factory-specified 4 5/16-inch wide, high efficiency media filter.
- For best furnace efficiency when using the 4 5/16-inch wide media filter, adjust the blower speed tap to near the mid-point of the rise range.

ICS—Isolated Combustion System

# INSTALLATION

This forced air furnace is equipped for use with natural gas at altitudes 0 - 10,000 ft (0 - 3,050m), except 140 size Furnaces are only approved for altitudes 0 - 7,000 ft. (0 - 2,135m).

An accessory kit, supplied by the manufacturer, shall be used to convert to propane gas use or may be required for some natural gas applications.

This furnace is for indoor installation in a building constructed on site. This furnace may be installed in a manufactured (mobile) home when stated on rating plate and using factory authorized kit.

This furnace may be installed on combustible flooring in alcove or closet at minimum clearance from combustible material.

This appliance requires a special venting system. Refer to the installation instructions for parts list and method of installation. This furnace is for use with schedule-40 PVC, PVC-DWV, CPVC, or ABS-DWV pipe, and must not be vented in common with other gas-fired appliances. Construction through which vent/air intake pipes may be installed is maximum 24 inches (600 mm), minimum 3/4 inches (19 mm) thickness (including roofing materials).

Cette fournaise à air pulsé est équipée pour utilisation avec gaz naturel et altitudes comprises entre 0 - 3,050m (0-10,000 pi), excepté queles fournaises de 140 taille sont pour altitudes comprises entre 0 - 2,135m (0 - 7,000 pi).

Utiliser une trousse de conversion, fournie par le fabricant, pour passer au gaz propane ou pour certaines installations au gaz naturel.

Cette fournaise à air pulsé est pour installation à l´intérieur dans un bâtiment construit sur place. Cette fournaise à air pulsé peut être installée dans une maison préfabriquée (maison mobile) si prescrit par la plaque signalétique et si l´on utilise une trousse specifiée par le fabricant.

Cette fournaise peut être installée sur un plancher combustible dans un enfoncement ou un placard en observant les dégagements minimums avec les matériaux combustibles.

Cet appareil nécessite un système d´évacuation spécial. La méthode d´installation et la liste des pièces nécessaires figurent dans les instructions d´installation.Cette fournaise doit s´utiliser avec la tuyauterie des nomenclatures 40 PVC, PVC-DWV, CPVC, ou ABS-DWV et elle ne peut pas être ventilée conjointment avec d´autres appareils à gaz. Épaisseur de la construction au travers de laquelle il est possible de faire passer les tuyaux d´aération (admission/évacuation): 24 po (600 mm) maximum, 3/4 po (19 mm) minimum (y compris la toiture).

For upflow and downflow applications, furnace must be installed level, or pitched within 1/2" of level. For a horizontal application, the furnace must be pitched minimum 1/4" to maximum of 1/2" forward for proper drainage. See Installation Manual for IMPORTANT unit support details on horizontal applications.

Pour des applications de flux ascendant et descendant, la fournaise doit être installée de niveau ou inclinée à pas plus de 1/2" du niveau. Pour une application horizontale, la fournaise doit être inclinée entre minimum 1/4" et maximum 1/2" du niveau pour le drainage approprié. En cas d'installation en position horizontale, consulter les renseignements IMPORTANTS sur le support dans le manuel d'installation.

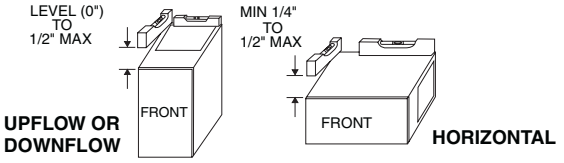


## MINIMUM INCHES CLEARANCE TO COMBUSTIBLE CONSTRUCTION

**ALL POSITIONS:**

* Minimum front clearance for service 30 inches (762mm).

†† 140 size furnaces require 1 inch back clearance to combustible materials.

**DOWNFLOW POSITIONS:**

† For installation on combustible floors only when installed on special base No. KGASB0201ALL, Coil Assembly, Part No. CD5 or CK5, or Coil Casing, Part No. KCAKC.

**HORIZONTAL POSITIONS:**

Line contact is permissible only between lines formed by intersections of top and two sides of furnace jacket, and building joists, studs, or framing.

§ Clearance shown is for air inlet and air outlet ends.

Ø 120 and 140 size furnaces require 1 inch bottom clearance to combustible materials.

## DÉGAGEMENT MINIMUM EN POUCES AVEC ÉLÉMENTS DE CONSTRUCTION COMBUSTIBLES

**POUR TOUS LES POSITIONS:**

* Dégagement avant minimum de 762mm (30 po) pour l´entretien.

†† Pour les fournaises de 140 taille, 1 po (25mm) dégagement des matériaux combustibles est requis au-arriere.

**POUR LA POSITION COURANT DESCENDANT:**

† Pour l´installation sur le plancher combustible seulement quand on utilise la base spéciale, pièce n° KGASB0201ALL, l´ensemble serpentin, pièce n° CD5 ou CK5, ou le carter de serpentin, pièce n° KCAKC.

**POUR LA POSITION HORIZONTALE:**

Le contact n´est permis qúentre les lignes formées par les intersections du dessus et des deuxcôtés de la chemise de la fournaise, et des solives, des montants ou de la charpente du bâtiment.

§ La distance indiquée concerne l´extrémité du tuyau d´arrivée d´air et l´extrémité du tuyau de sortie d´air.

Ø Pour les fournaises de 120 et 140 taille, 1 po (25mm) dégagement des matériaux combustibles est requis au-dessous.

This furnace is approved for UPFLOW, DOWNFLOW and HORIZONTAL installations.

Cette fournaise est approuvée pour l´installation HORIZONTALE et la circulation d´air VERS LE HAUT et VERS LE BAS.

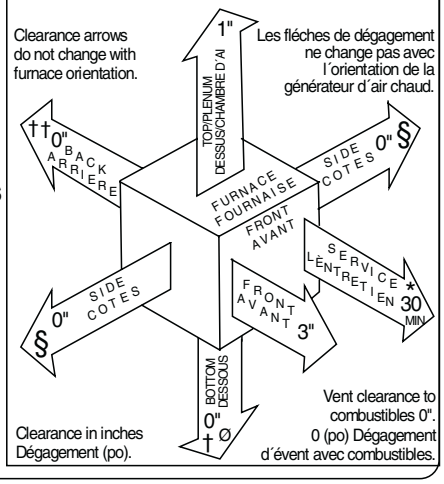


324999-201 REV. D (LIT TOP)

## AIR DELIVERY—CFM (With Filter)*

| UNIT SIZE CARRIER | RETURN-AIR SUPPLY | SPEED | EXTERNAL STATIC PRESSURE (In. wc) | | | | | | | |
|---|---|---|---|---|---|---|---|---|---|---|
| | | | 0.1 | 0.2 | 0.3 | 0.4 | 0.5 | 0.6 | 0.7 | 0.8 |
| 060-12 | 1 side or bottom | High | 1490 | 1450 | 1400 | 1345 | 1275 | 1190 | 1080 | 960 |
| | | Med-High | 1190 | 1180 | 1155 | 1120 | 1070 | 1005 | 915 | 810 |
| | | Med | 1015 | 1010 | 995 | 965 | 920 | 875 | 800 | 715 |
| | | Med-Low | 870 | 860 | 840 | 820 | 780 | 735 | 670 | 580 |
| | | Low | 685 | 670 | 645 | 620 | 595 | 545 | 495 | 420 |
| 080-12 | 1 side or bottom | High | 1605 | 1560 | 1510 | 1450 | 1380 | 1300 | 1195 | 1045 |
| | | Med-High | 1305 | 1290 | 1265 | 1225 | 1175 | 1100 | 995 | 895 |
| | | Med | 1135 | 1125 | 1110 | 1080 | 1030 | 965 | 885 | 800 |
| | | Med-Low | 990 | 980 | 965 | 930 | 880 | 825 | 760 | 685 |
| | | Low | 805 | 780 | 745 | 700 | 660 | 630 | 575 | 495 |
| 080-16 | 1 side or bottom | High | 1810 | 1755 | 1690 | 1640 | 1565 | 1495 | 1410 | 1330 |
| | | Med-High | 1420 | 1385 | 1350 | 1305 | 1260 | 1210 | 1145 | 1090 |
| | | Med | 1205 | 1175 | 1135 | 1100 | 1060 | 1010 | 960 | 905 |
| | | Med-Low | 1035 | 990 | 945 | 910 | 875 | 840 | 790 | 735 |
| | | Low | 805 | 750 | 705 | 660 | 620 | 585 | 540 | 490 |
| 100-16 | 1 side or bottom | High | 1740 | 1705 | 1660 | 1615 | 1570 | 1500 | 1425 | 1355 |
| | | Med-High | 1500 | 1470 | 1445 | 1410 | 1375 | 1330 | 1280 | 1210 |
| | | Med-Low | 1340 | 1315 | 1300 | 1270 | 1235 | 1200 | 1140 | 1095 |
| | | Low | 1195 | 1175 | 1165 | 1130 | 1100 | 1070 | 1030 | 975 |
| 100-20 | bottom only | High | 2345 | 2265 | 2195 | 2110 | 2035 | 1940 | 1850 | 1745 |
| | | Med-High | 2110 | 2065 | 2010 | 1945 | 1875 | 1800 | 1710 | 1615 |
| | | Med | 1810 | 1795 | 1770 | 1725 | 1680 | 1615 | 1545 | 1460 |
| | | Med-Low | 1480 | 1465 | 1440 | 1415 | 1375 | 1330 | 1260 | 1190 |
| | | Low | 1235 | 1205 | 1180 | 1155 | 1115 | 1065 | 1015 | 950 |
| | both sides or 1 side and bottom | High | 2425 | 2365 | 2300 | 2240 | 2160 | 2080 | 1980 | 1880 |
| | | Med-High | 2045 | 2025 | 2000 | 1965 | 1910 | 1850 | 1785 | 1695 |
| | 1 side only | High | 2305 | 2235 | 2170 | 2100 | 2005 | 1925 | 1825 | 1730 |
| | | Med-High | 2030 | 1995 | 1950 | 1905 | 1835 | 1775 | 1685 | 1600 |
| 120-20 | bottom only | High | 2385 | 2320 | 2245 | 2160 | 2075 | 1975 | 1870 | 1775 |
| | | Med-High | 2105 | 2060 | 2005 | 1945 | 1880 | 1795 | 1710 | 1620 |
| | | Med | 1785 | 1770 | 1740 | 1700 | 1650 | 1600 | 1525 | 1450 |
| | | Med-Low | 1495 | 1470 | 1450 | 1420 | 1385 | 1335 | 1280 | 1220 |
| | | Low | 1250 | 1215 | 1190 | 1155 | 1125 | 1085 | 1040 | 985 |
| | both sides or 1 side and bottom | High | 2475 | 2435 | 2385 | 2320 | 2260 | 2180 | 2095 | 1995 |
| | | Med-High | 2085 | 2075 | 2055 | 2030 | 1980 | 1930 | 1865 | 1785 |
| | 1 side only | High | 2255 | 2190 | 2115 | 2045 | 1965 | 1890 | 1800 | 1710 |
| | | Med-High | 1985 | 1930 | 1890 | 1840 | 1780 | 1720 | 1645 | 1560 |

* • Airflow shown is with factory supplied 1-in. washable filter.
- A filter is required for each return air opening.
- An airflow reduction of up to 7% may occur when using the factory-specified 4-5/16-inch wide, high efficiency media filter.
- For best furnace efficiency when using the 4 5/16-inch wide media filter, adjust blower speed tap to near the mid-point of the rise range.
- For horizontal and downflow applications, use “1 side or bottom” or “bottom only” as airflow reference.

# Combustion-air and vent piping for Direct Vent (2-Pipe) and Non-Direct Vent (1-Pipe) Applications

## MAXIMUM ALLOWABLE PIPE LENGTH (FT)

| ALTITUDE (FT) | UNIT MAX INPUT RATE (BTUH) | DIRECT VENT (2-PIPE) ONLY | | NON-DIRECT VENT (1-PIPE) ONLY | NUMBER OF 90° ELBOWS | | | | | |
|---|---|---|---|---|---|---|---|---|---|---|
| | | TERMINATION TYPE | PIPE DIA (IN.)* | PIPE DIA (IN.)* | 1 | 2 | 3 | 4 | 5 | 6 |
| 0 to 2000 | 60,000 | 2 Pipe or 2-in Concentric | 1-1/2 | 1-1/2 | 20 | 15 | 10 | 5 | NA | NA |
| | | | 2 | 2 | 70 | 70 | 70 | 70 | 70 | 70 |
| | 80,000 | 2 Pipe or 2-in Concentric | 1-1/2 | 1-1/2 | 10 | NA | NA | NA | NA | NA |
| | | | 2 | 2 | 55 | 50 | 35 | 30 | 30 | 20 |
| | | | 2-1/2 | 2-1/2 | 70 | 70 | 70 | 70 | 70 | 70 |
| | 100,000 | 2 Pipe or 3-in Concentric | 2 | 2 | 5 | NA | NA | NA | NA | NA |
| | | | 2-1/2 | 2-1/2 | 40 | 30 | 20 | 20 | 10 | NA |
| | | | 3 | 3 | 70 | 70 | 70 | 70 | 70 | 70 |
| | 120,000 | 2 Pipe or 3-in. Concentric | 2-1/2 one disk | 2-1/2 | 10 | NA | NA | NA | NA | NA |
| | | | 3† | NA | 45 | 40 | 35 | 30 | 25 | 20 |
| | | | 3† no disk | 3† | 70 | 70 | 70 | 70 | 70 | 70 |
| ALTITUDE (FT) | UNIT MAX INPUT RATE (BTUH) | DIRECT VENT (2-PIPE) ONLY | | NON-DIRECT VENT (1-PIPE) ONLY | NUMBER OF 90° ELBOWS | | | | | |
| | | TERMINATION TYPE | PIPE DIA (IN.)* | PIPE DIA (IN.)* | 1 | 2 | 3 | 4 | 5 | 6 |
| 2001 to 3000 | 60,000 | 2 Pipe or 2-in Concentric | 1-1/2 | 1-1/2 | 17 | 12 | 7 | NA | NA | NA |
| | | | 2 | 2 | 70 | 67 | 66 | 61 | 61 | 61 |
| | 80,000 | 2 Pipe or 2-in Concentric | 2 | 2 | 49 | 44 | 30 | 25 | 25 | 15 |
| | | | 2-1/2 | 2-1/2 | 70 | 70 | 70 | 70 | 70 | 70 |
| | 100,000 | 2 Pipe or 3-in Concentric | 2-1/2 | 2-1/2 | 35 | 26 | 16 | 16 | 6 | NA |
| | | | 3 | 3 | 70 | 70 | 70 | 70 | 66 | 61 |
| | 120,000 | 2 Pipe or 3-in. Concentric | 3 | NA | 14 | 9 | NA | NA | NA | NA |
| | | | NA | 3† | 63 | 62 | 62 | 61 | 61 | 61 |
| | | | 3† no disk | NA | 70 | 70 | 63 | 56 | 50 | 43 |
| | | | 4† no disk | 4† no disk | 70 | 70 | 70 | 70 | 70 | 70 |
| ALTITUDE (FT) | UNIT MAX INPUT RATE (BTUH) | DIRECT VENT (2-PIPE) ONLY | | NON-DIRECT VENT (1-PIPE) ONLY | NUMBER OF 90° ELBOWS | | | | | |
| | | TERMINATION TYPE | PIPE DIA (IN)* | PIPE DIA (IN.)* | 1 | 2 | 3 | 4 | 5 | 6 |
| 3001 to 4000 | 60,000 | 2 Pipe or 2-in Concentric | 1-1/2 | 1-1/2 | 16 | 11 | 6 | NA | NA | NA |
| | | | 2 | 2 | 68 | 63 | 62 | 57 | 57 | 56 |
| | 80,000 | 2 Pipe or 2-in Concentric | 2 | 2 | 46 | 41 | 28 | 23 | 22 | 13 |
| | | | 2-1/2 | 2-1/2 | 70 | 70 | 70 | 70 | 70 | 70 |
| | 100,000 | 2 Pipe or 3-in Concentric | 2-1/2 | 2-1/2 | 33 | 24 | 15 | 14 | 5 | NA |
| | | | 3 | 3 | 70 | 70 | 70 | 66 | 61 | 56 |
| | 120,000 | 2 Pipe or 3-in. Concentric | 3† no disk | NA | 65 | 58 | 51 | 44 | 38 | 31 |
| | | | NA | 3† | 59 | 59 | 58 | 57 | 57 | 56 |
| | | 4† no disk | 4† no disk | 4† no disk | 70 | 70 | 70 | 70 | 70 | 70 |

See notes at end of table

# Combustion-air and vent piping for Direct Vent (2-Pipe) and Non-Direct Vent (1-Pipe) Applications

**MAXIMUM ALLOWABLE PIPE LENGTH (FT) (Continued)**

| ALTITUDE (FT) | UNIT MAX INPUT RATE (BTUH) | DIRECT VENT (2-PIPE) ONLY | | NON-DIRECT VENT (1-PIPE) ONLY | NUMBER OF 90° ELBOWS | | | | | |
|---|---|---|---|---|---|---|---|---|---|---|
| | | TERMINATION TYPE | PIPE DIA (IN.)* | PIPE DIA (IN.)* | 1 | 2 | 3 | 4 | 5 | 6 |
| 4001 to 5000‡ | 60,000 | 2 Pipe or 2-in Concentric | 1-1/2 | 1-1/2 | 15 | 10 | 5 | NA | NA | NA |
| | | | 2 | 2 | 64 | 59 | 58 | 53 | 52 | 52 |
| | 80,000 | 2 Pipe or 2-in Concentric | 2 | 2 | 44 | 39 | 26 | 21 | 20 | 11 |
| | | | 2-1/2 | 2-1/2 | 70 | 70 | 70 | 70 | 70 | 70 |
| | 100,000 | 2 Pipe or 3-in Concentric | 2-1/2 | 2-1/2 | 31 | 22 | 13 | 12 | NA | NA |
| | | | 3 | 3 | 70 | 70 | 67 | 62 | 57 | 52 |
| | 120,000 | 2 Pipe or 3-in. Concentric | 3† no disk | NA | 53 | 46 | 40 | 33 | 26 | 20 |
| | | | NA | 3† | 56 | 55 | 54 | 53 | 52 | 52 |
| | | | 4† no disk | 4† no disk | 70 | 70 | 70 | 70 | 70 | 70 |
| ALTITUDE (FT) | UNIT MAX INPUT RATE (BTUH) | DIRECT VENT (2-PIPE) ONLY | | NON-DIRECT VENT (1-PIPE) ONLY | NUMBER OF 90° ELBOWS | | | | | |
| | | TERMINATION TYPE | PIPE DIA (IN.)* | PIPE DIA (IN.)* | 1 | 2 | 3 | 4 | 5 | 6 |
| 5001 to 6000‡ | 60,000 | 2 Pipe or 2-in Concentric | 1-1/2 | 1-1/2 | 14 | 9 | NA | NA | NA | NA |
| | | | 2 | 2 | 60 | 55 | 54 | 49 | 48 | 47 |
| | 80,000 | 2 Pipe or 2-in Concentric | 2 | 2 | 41 | 36 | 23 | 18 | 17 | 8 |
| | | | 2-1/2 | 2-1/2 | 70 | 70 | 70 | 70 | 70 | 70 |
| | 100,000 | 2 Pipe or 3-in Concentric | 2-1/2 | 2-1/2 | 29 | 21 | 12 | 11 | NA | NA |
| | | | 3 | 3 | 70 | 67 | 62 | 57 | 52 | 47 |
| | 120,000 | 2 Pipe or 3-in. Concentric | 3† no disk | NA | 42 | 35 | 29 | 22 | 15 | 9 |
| | | | NA | 3† | 53 | 52 | 50 | 49 | 48 | 47 |
| | | | 4† no disk | 4† no disk | 70 | 70 | 70 | 70 | 70 | 70 |
| ALTITUDE (FT) | UNIT MAX INPUT RATE (BTUH) | DIRECT VENT (2-PIPE) ONLY | | NON-DIRECT VENT (1-PIPE) ONLY | NUMBER OF 90° ELBOWS | | | | | |
| | | TERMINATION TYPE | PIPE DIA (IN)* | PIPE DIA (IN)* | 1 | 2 | 3 | 4 | 5 | 6 |
| 6001 to 7000‡ | 60,000 | 2 Pipe or 2-in Concentric | 1-1/2 | 1-1/2 | 13 | 8 | NA | NA | NA | NA |
| | | | 2 | 2 | 57 | 52 | 50 | 45 | 44 | 43 |
| | 80,000 | 2 Pipe or 2-in Concentric | 2 | 2 | 38 | 33 | 21 | 16 | 15 | 6 |
| | | | 2-1/2 | 2-1/2 | 70 | 70 | 68 | 67 | 66 | 64 |
| | 100,000 | 2 Pipe or 3-in Concentric | 2-1/2 | 2-1/2 | 27 | 19 | 10 | 9 | NA | NA |
| | | | 3 | 3 | 68 | 63 | 58 | 53 | 48 | 43 |
| | 120,000 | 2 Pipe or 3-in. Concentric | 3† no disk | NA | 31 | 24 | 18 | 11 | NA | NA |
| | | | NA | 3† | 49 | 48 | 47 | 45 | 44 | 43 |
| | | | 4† no disk | 4† no disk | 70 | 70 | 70 | 70 | 67 | 62 |

See notes at end of table

# Combustion-air and vent piping for Direct Vent (2-Pipe) and Non-Direct Vent (1-Pipe) Applications

## MAXIMUM ALLOWABLE PIPE LENGTH (FT) (Continued)

| ALTITUDE (FT) | UNIT SIZE (BTUH) | DIRECT VENT (2-PIPE) ONLY | | NON-DIRECT VENT (1-PIPE) ONLY | NUMBER OF 90° ELBOWS | | | | | |
|---|---|---|---|---|---|---|---|---|---|---|
| | | TERMINATION TYPE | PIPE DIA (IN.)* | PIPE DIA (IN.)* | 1 | 2 | 3 | 4 | 5 | 6 |
| 7001 to 8000‡ | 60,000 | 2 Pipe or 2-in Concentric | 1-1/2 | 1-1/2 | 12 | 7 | NA | NA | NA | NA |
| | | | 2 | 2 | 53 | 48 | 46 | 41 | 40 | 38 |
| | 80,000 | 2 Pipe or 2-in Concentric | 2 | 2 | 36 | 31 | 19 | 14 | 12 | NA |
| | | | 2-1/2 | 2-1/2 | 66 | 65 | 63 | 62 | 60 | 59 |
| | 100,000 | 2 Pipe or 3-in Concentric | 2-1/2 | 2-1/2 | 25 | 17 | 8 | 7 | NA | NA |
| | | | 3 | 3 | 63 | 58 | 53 | 48 | 43 | 38 |
| | 120,000 | 2 Pipe or 3-in. Concentric | 3† no disk | NA | 20 | 13 | 7 | NA | NA | NA |
| | | | NA | 3† | 46 | 44 | 43 | 41 | 40 | 38 |
| | | | 4† no disk | 4† no disk | 61 | 56 | 51 | 46 | 41 | 36 |
| ALTITUDE (FT) | UNIT SIZE (BTUH) | DIRECT VENT (2-PIPE) ONLY | | NON-DIRECT VENT (1-PIPE) ONLY | NUMBER OF 90° ELBOWS | | | | | |
| | | TERMINATION TYPE | PIPE DIA (IN.)* | PIPE DIA (IN.)* | 1 | 2 | 3 | 4 | 5 | 6 |
| 8001 to 9000‡ | 60,000 | 2 Pipe or 2-in Concentric | 1-1/2 | 1-1/2 | 11 | 6 | NA | NA | NA | NA |
| | | | 2 | 2 | 49 | 44 | 42 | 37 | 35 | 34 |
| | 80,000 | 2 Pipe or 2-in Concentric | 2 | 2 | 33 | 28 | 17 | 12 | 10 | NA |
| | | | 2-1/2 | 2-1/2 | 62 | 60 | 58 | 56 | 55 | 53 |
| | 100,000 | 2 Pipe or 3-in Concentric | 2-1/2 | 2-1/2 | 23 | 15 | 7 | 5 | NA | NA |
| | | | 3 | 3 | 59 | 54 | 49 | 44 | 39 | 34 |
| | 120,000 | 2 Pipe or 3-in. Concentric | 3† no disk | NA | 10 | NA | NA | NA | NA | NA |
| | | | NA | 3† | 43 | 41 | 39 | 37 | 35 | 34 |
| | | | 4† no disk | 4† no disk | 35 | 30 | 25 | 20 | 15 | 10 |
| ALTITUDE (FT) | UNIT SIZE (BTUH) | DIRECT VENT (2-PIPE) ONLY | | NON-DIRECT VENT (1-PIPE) ONLY | NUMBER OF 90° ELBOWS | | | | | |
| | | TERMINATION TYPE | PIPE DIA (IN.)* | PIPE DIA (IN.)* | 1 | 2 | 3 | 4 | 5 | 6 |
| 9001 to 10,000‡ | 60,000 | 2 Pipe or 2-in Concentric | 2 | 2 | 45 | 40 | 38 | 33 | 31 | 29 |
| | 80,000 | 2 Pipe or 2-in Concentric | 2 | 2 | 30 | 25 | 14 | 9 | 7 | NA |
| | | | 2-1/2 | 2-1/2 | 57 | 55 | 53 | 51 | 49 | 47 |
| | 100,000 | 2 Pipe or 3-in Concentric | 2-1/2 | 2-1/2 | 21 | 13 | 5 | NA | NA | NA |
| | | | 3 | 3 | 54 | 49 | 44 | 39 | 34 | 29 |
| | 120,000 | 2 Pipe or 3-in. Concentric | NA | 3† | 39 | 37 | 35 | 33 | 31 | 29 |
| | | | 4† no disk | 4† no disk | 10 | 5 | NA | NA | NA | NA |

*Disk usage-Unless otherwise specified, use perforated disk assembly (factory-supplied in loose parts bag). If one disk is stated, separate 2 halves of perforated disk assembly and use shouldered disk half. When using shouldered disk half, install screen side toward inlet box.
†Wide radius elbow.
‡Vent sizing for Canadian installations over 4500 ft (1370 m) above sea level are subject to acceptance by the local authorities having jurisdiction.
NA-Not Allowed; pressure switch will not make.

**NOTES:**

1. Do not use pipe size greater than those specified in table or incomplete combustion, flame disturbance, or flame sense lockout may occur.
2. Size both the combustion-air and vent pipe independently, then use the larger diameter for both pipes.
3. Assume two 45° elbows equal one 90° elbow. Wide radius elbows are desirable and may be required in some cases.
4. Elbows and pipe sections within the furnace casing and at the vent termination should not be included in vent length or elbow count.
5. The minimum pipe length is 5 ft for all applications.
6. Use 3-in. diameter vent termination kit for installations requiring 4-in diameter pipe.

# Combustion-air and vent piping for Direct Vent (2-Pipe) and Non-Direct Vent (1-Pipe) Applications

**MAXIMUM ALLOWABLE EXPOSED VENT PIPE LENGTH (FT) WITH AND WITHOUT INSULATION IN WINTER DESIGN TEMPERATURE AMBIENT***

| UNIT SIZE | WINTER DESIGN TEMPERATURE (°F) | MAX PIPE DIAMETER (IN.) | WITHOUT INSULATION | WITH 3/8-IN. OR THICKER INSULATION† |
|---|---|---|---|---|
| 060 | 20 | 2 | 44 | 70 |
| | 0 | 2 | 21 | 70 |
| | –20 | 2 | 20 | 57 |
| 080 | 20 | 2 | 55 | 55 |
| | 0 | 2 | 30 | 55 |
| | –20 | 2 | 16 | 55 |
| | 20 | 2.5 | 58 | 70 |
| | 0 | 2.5 | 29 | 70 |
| | –20 | 2.5 | 14 | 67 |
| 100 | 20 | 2.5 | 40 | 40 |
| | 0 | 2.5 | 38 | 40 |
| | –20 | 2.5 | 21 | 40 |
| | 20 | 3 | 63 | 70 |
| | 0 | 3 | 30 | 70 |
| | –20 | 3 | 12 | 70 |
| 120 | 20 | 3 | 70 | 70 |
| | 0 | 3 | 38 | 70 |
| | –20 | 3 | 19 | 70 |
| | 20 | 4 | 65 | 70 |
| | 0 | 4 | 26 | 70 |
| | –20 | 4 | 5 | 65 |

* Pipe length (ft) specified for maximum pipe lengths located in unconditioned spaces. Pipes located in unconditioned space cannot exceed total allowable pipe length as specified in Table 6.

† Insulation thickness based on R value of 3.5 per inch.

# Electrical data

| UNIT SIZE | | 060-12 | 080-12 | 080-16 | 100-16 | 100-20 | 120-20 |
|---|---|---|---|---|---|---|---|
| UNIT VOLTS — HERTZ — PHASE | | 115—60—1 | | | | | |
| OPERATING VOLTAGE RANGE (Min — Max)* | | 104—127 | | | | | |
| MAXIMUM UNIT AMPS | | 8.4 | 8.1 | 11.6 | 11.6 | 13.3 | 12.9 |
| UNIT AMPACITY† | | 11.3 | 10.8 | 15.3 | 15.4 | 17.5 | 16.8 |
| MINIMUM WIRE SIZE | | 14 | 14 | 12 | 12 | 12 | 12 |
| MAXIMUM WIRE LENGTH (Ft)‡ | | 33 | 34 | 37 | 37 | 33 | 34 |
| MAXIMUM FUSE OR CKT BKR (Amps)** | | 15 | 15 | 20 | 20 | 20 | 20 |
| TRANSFORMER (24v) | | 40va | | | | | |
| EXTERNAL CONTROL POWER AVAILABLE | Heating | 19 | | | | | |
| | Cooling | 35 | | | | | |
| AIR CONDITIONING BLOWER RELAY | | Standard | | | | | |

* Permissible limits of the voltage range at which unit will operate satisfactorily.
† Unit ampacity =125% of largest operating component's full load amps plus 100% of all other potential operating components' (EAC, humidifier, etc.) full load amps.
‡ Length is as measured 1 way along wire path between unit and service panel for maximum 2% voltage drop.
** Time-delay type is recommended.

# Typical wiring schematic—1-Stage Thermostat

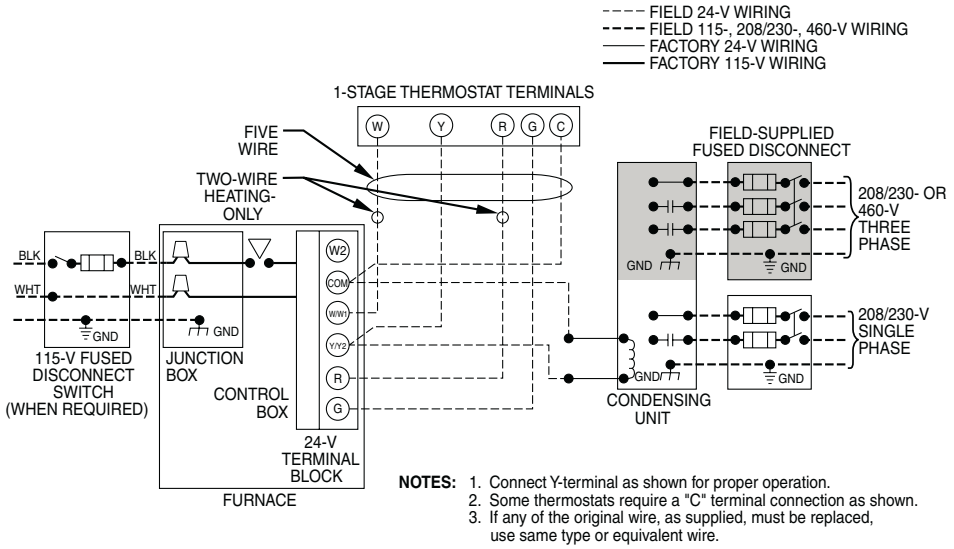


**NOTES:** 1. Connect Y-terminal as shown for proper operation.
2. Some thermostats require a "C" terminal connection as shown.
3. If any of the original wire, as supplied, must be replaced, use same type or equivalent wire.

A99071

# Typical wiring schematic—2-Stage Thermostat

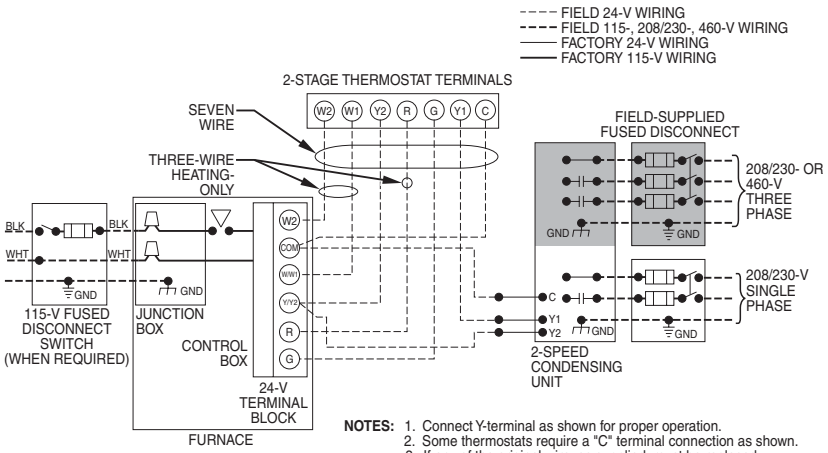


**NOTES:** 1. Connect Y-terminal as shown for proper operation.
2. Some thermostats require a "C" terminal connection as shown.
3. If any of the original wire, as supplied, must be replaced, use same type or equivalent wire.

A99072

# Typical installations

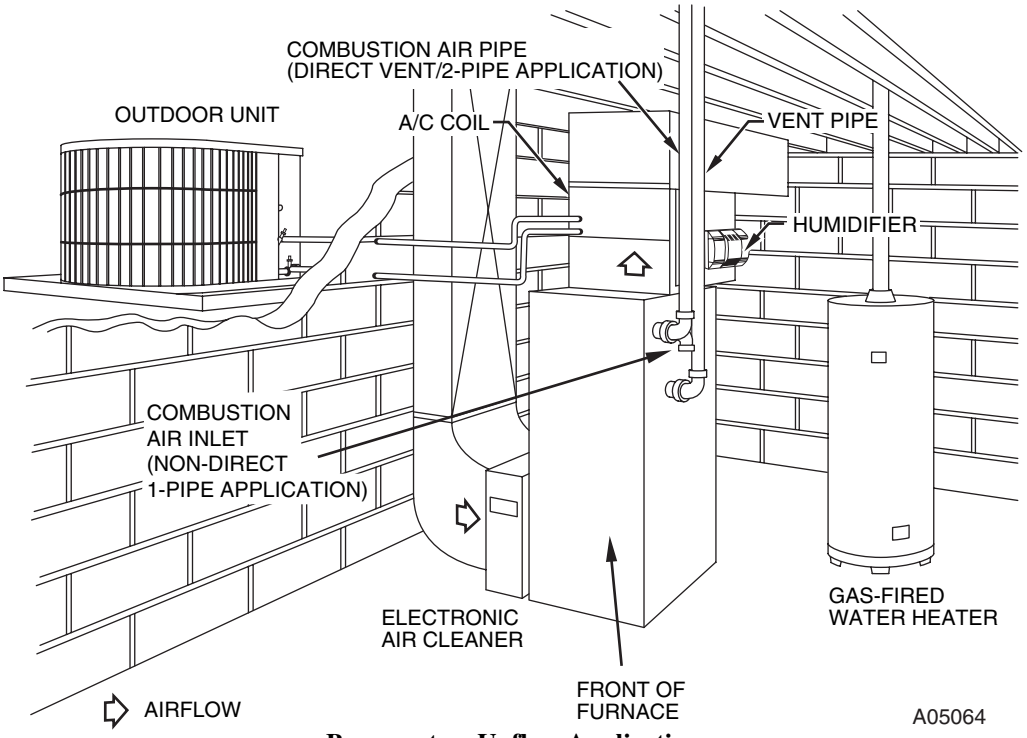


**Basement — Upflow Application**

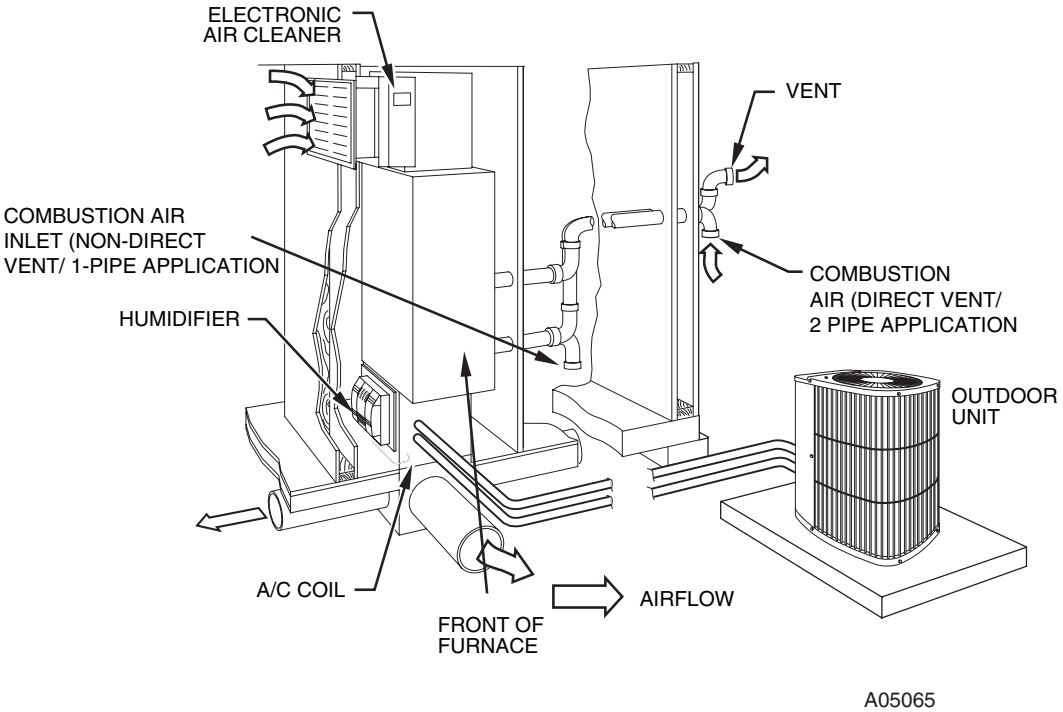


**Closet — Downflow Application**

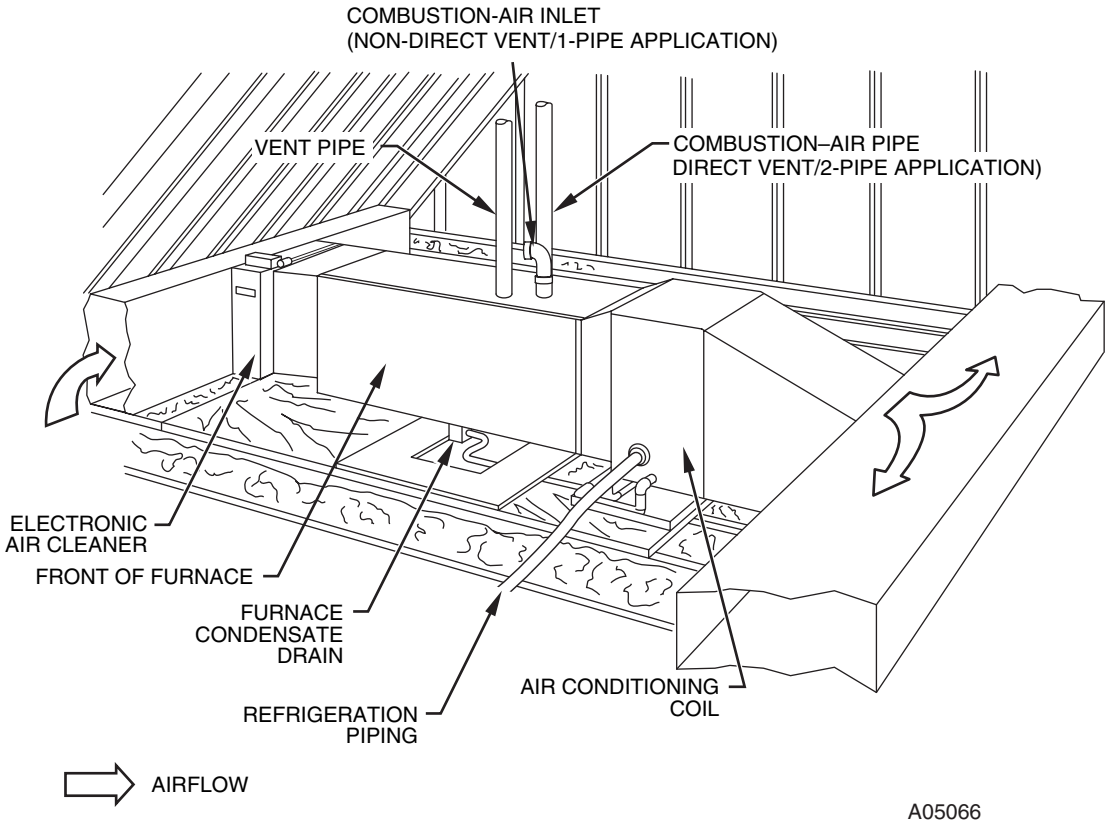


**Attic — Horizontal Application**

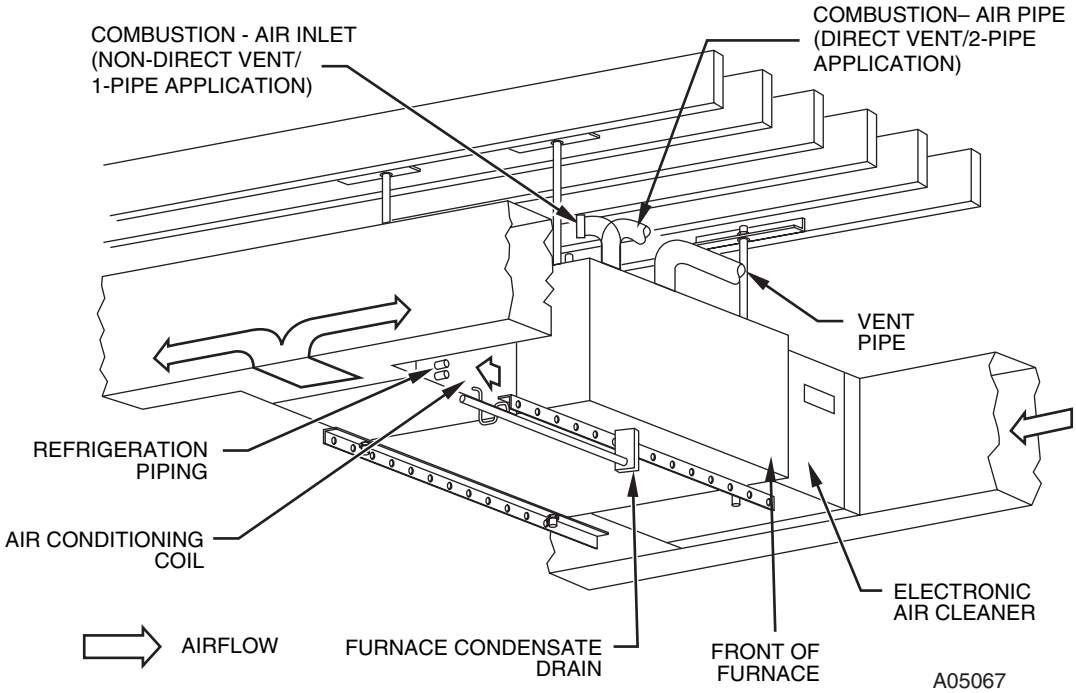


**Crawlspace — Horizontal Application**

# Guide Specifications

**Performance 93**
**Two-Stage Furnace**
**58MTB**

**GENERAL**

**System Description**

Furnish a _____ (4-way multipoise) dual capacity gas-fired condensing furnace for use with natural gas or propane (factory authorized conversion kit required for propane); furnish cold air return plenum; furnish external medial cabinet for use with accessory media filter or standard filter.

**Quality Assurance**

Unit will be designed, tested and constructed to the current ANSI Z 21.47/CSA 2.3 design standard for gas-fired central furnaces.

Unit will be 3rd party certified by CSA to the current ANSI Z 21.47/CSA 2.3 design standard for gas-fired central furnaces.

Unit will carry the CSA Blue Star® and Blue Flame® labels.

Unit efficiency testing will be performed per the current DOE test procedure as listed in the Federal Register.

Unit will be certified for capacity and efficiency and listed in the latest GAMA Consumer's Directory of Certified Efficiency Ratings.

Unit will carry the current Federal Trade Commission Energy Guide efficiency label.

**Delivery, Storage, and Handling**

Unit will be shipped as single package only and is stored and handled per unit manufacturer's recommendations.

**Warranty (for inclusion by specifying engineer)**

U.S. and Canada only. Warranty certificate available upon request.

**PRODUCTS**

**Equipment**

Components shall include: slow-opening dual rate gas valve to reduce ignition noise, regulate gas flow, with electric switch gas shut-off; flame proving sensor, hot surface igniter, pressure switch assembly verifies inducer operation; flame rollout switch, drain tubing and installed condensate drain trap, blower and inducer assembly, 40va transformer; low-voltage (heating) (heating/cooling) thermostat.

Blower Wheel and Blower Motor

Galvanized blower wheel shall be centrifugal type, statically and dynamically balanced. Blower motor of PSC type shall be permanently lubricated with sealed bearings, of _____ hp, and shall be multiple-speed direct drive. Blower motor shall be soft mounted to the blower scroll to reduce vibration transmission.

Filters

Furnace shall have reusable-type filters. Filter shall be _____ in (x) _____in. An accessory high efficiency Media Filter is available as an option _____Media Filter.

Casing

Casing shall be of .030 in. thickness minimum, pre-painted galvanized steel.

Two Speed Inducer Motor

Two Speed Inducer motor shall be soft mounted to reduce vibration transmission.

Primary Heat Exchangers

Primary Heat exchangers shall be 3-Pass 20 gauge corrosion resistant aluminized steel of fold-and-crimp sectional design, which operates under negative pressure.

Secondary Heat Exchangers

Secondary Heat exchangers shall be of a flow-through design having a patented interior laminate coating of polypropylene for greater corrosion resistance with fold-and-crimp design, which operates under negative pressure.

Controls

Controls shall include a microprocessor based integrated electronic control board with at least 11 service troubleshooting codes displayed via diagnostic flashing LED light on the control, has ability to store fault codes, when activated a self-test feature checks all major functions of the furnace within one minute, and a replaceable automotive-type circuit protection fuse. Multiple operational settings available including, separate blower speeds for low heat, high heat, low cooling, high cooling and continuous fan. Continuous fan speed may be adjusted from the thermostat. Cooling airflow will be selectable between 350 or 400 CFM per ton of air conditioning. Features will also include temporary reduced airflow in the cooling mode for improved dehumidification when a Thermidistat® is selected as the thermostat.

**Operating Characteristics**

Heating Capacity shall be _____ Btuh input; _____ Btuh output capacity.

Fuel Gas Efficiency shall be 93% AFUE.

Air delivery shall be _____ cfm minimum at 0.50 in. wg. external static pressure.

Dimensions shall be: depth _____ in.; width _____ in.; height _____ in. (casing only). Height shall be _____ in. with A/C coil and _____ in. overall with plenum.

**Electrical Requirements**

Electrical supply shall be 115 volts, 60 Hz, single-phase (nominal). Minimum wire size shall be _____ AWG; maximum fuse size or HACR-type, designated circuit breaker shall be _____ Amps.

**Special Features**

Refer to section of the product data sheet identifying accessories and descriptions for specific features and available enhancements.

Copyright 2009 Carrier Corp. • 7310 W. Morris St. • Indianapolis, IN 46231
Printed in U.S.A. edition date: 09/09

**Manufacturer reserves the right to change, at any time, specifications or designs without notice and obligations**
Catalog No: 58MTB-2PD Replaces: 58MTB-1PD Rev.A