619KF
Floor Console Ductless System
Sizes 09 – 18

Document Type

TABLE OF CONTENTS

PAGE

SAFETY PRECAUTIONS 2
GENERAL 2
INDOOR UNIT PART NAMES 3
DISPLAY PANELS 3
REMOTE CONTROL PART NAMES 4
REMOTE CONTROL 5
REMOTE CONTROL FUNCTIONS 5
CLEANING, MAINTENANCE AND TROUBLESHOOTING 8

NOTE TO EQUIPMENT OWNER:

Please read this Owner's Information Manual carefully before installing and using this appliance and keep this manual for future reference.

For your convenience, please record the model and serial numbers of your new equipment in the spaces provided. This information, along with the installation data and dealer contact information, will be helpful should your system require maintenance or service.

UNIT INFORMATION

Model # _____

Serial # _____

INSTALLATION INFORMATION

Date Installed _____

DEALERSHIP CONTACT INFORMATION

Company Name: _____

Address: _____

_____

Phone Number: _____

Technician Name: _____

_____

SAFETY PRECAUTIONS

⚠ WARNING

PERSONAL INJURY, DEATH, OR PROPERTY DAMAGE HAZARD

Failure to follow this warning could result in personal injury, death, or property damage.

Read and follow all instructions and warnings, including labels shipped with or attached to unit before operating your new air conditioner.

Any time you see this symbol ⚠ in manuals, instructions and on the unit, be aware of the potential for personal injury. There are three levels of precaution:

DANGER identifies the most serious hazards which will result in severe personal injury or death.

WARNING signifies hazards that could result in personal injury or death.

CAUTION is used to identify unsafe practices which would result in minor personal injury or product and property damage.

NOTE is used to highlight suggestions which **will** result in enhanced installation, reliability, or operation.

⚠ WARNING

PERSONAL INJURY, DEATH AND / OR PROPERTY DAMAGE HAZARD

Failure to follow this warning could result in personal injury, death or property damage.

Improper installation, adjustment, alteration, service, maintenance, or use can cause explosion, fire, electrical shock, or other conditions which may cause personal injury or property damage.

Consult a qualified installer, service agency, your distributor or branch for information or assistance. The qualified installer or service agency must use factory−authorized kits or accessories when modifying this product.

GENERAL

The floor console fan coil unit provides quiet, maximum comfort. In addition to cooling and/or heating, the floor console fan coil unit matched with an outdoor condensing unit will filter and dehumidify the air in the room to provide maximum comfort.

IMPORTANT: The floor console fan coil unit should be installed by authorized personnel only; using approved tubing and accessories. If technical assistance, service or repair is needed, contact the installer.

The floor console fan coil unit can be set up and operated from the remote control (provided). **If the remote is misplaced, the system can be operated from the "Auto" setting on the unit.**

Operating Modes:

The floor console fan coil unit has five operating modes.

- Fan only
- Auto
- Heating
- Cooling
- Dehumidification (DRY)

Fan Only

In Fan Only mode, the system filters and circulates room air without changing room air temperature.

Auto

In Auto mode, the system will automatically cool or heat the room according to the user−selected set point.

Heating

In Heating mode, the system heats and filters room air.

Cooling

In Cooling mode, the system cools, dries and filters room air.

Dehumidification (DRY)

In Dehumidification mode, the system dries, filters and slightly cools room air temperature. Use of this mode ***does not*** take the place of a dehumidifier.

Remote Control

The remote control transmits commands to set up and operate the system. The control has a window display panel that shows the current system status. The control can be secured to a surface when used with the mounting bracket provided.

INDOOR UNIT PART NAMES

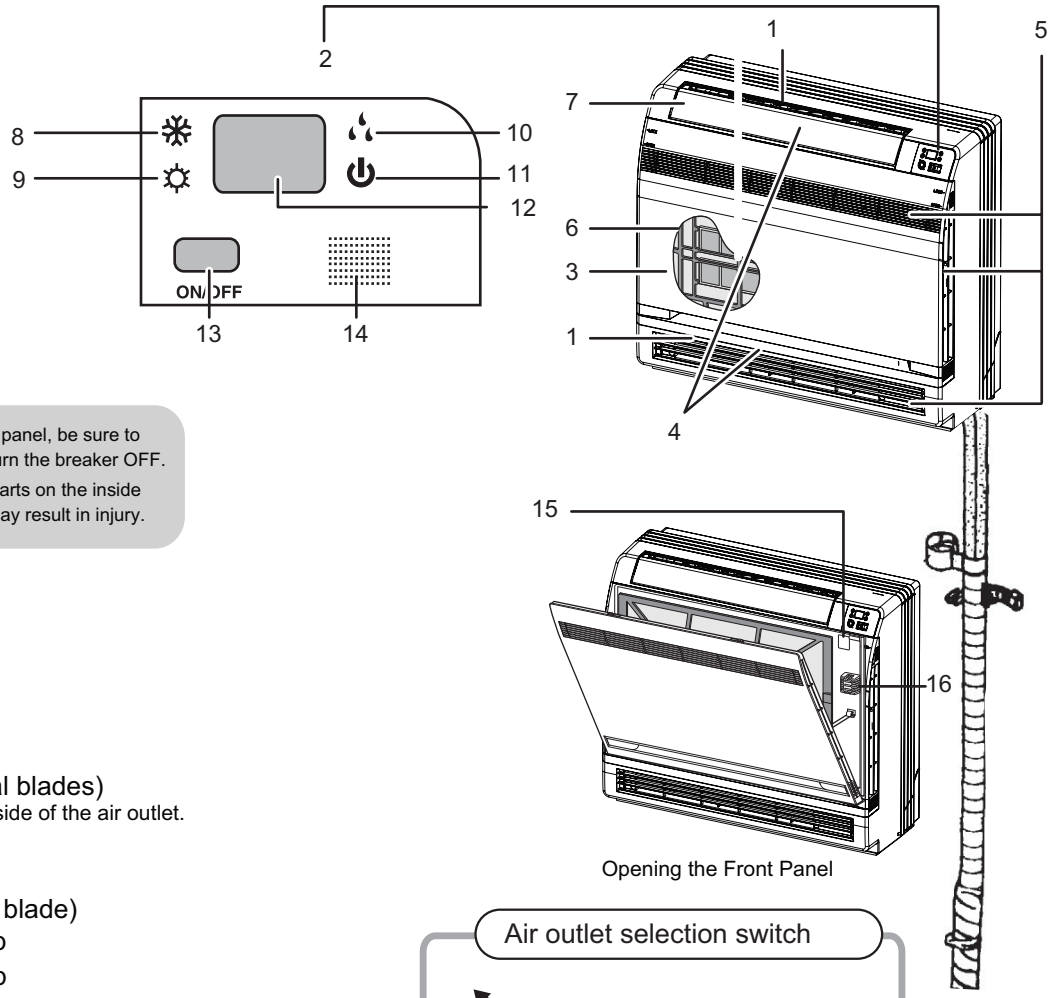

Opening the Front Panel

⚠ CAUTION

Before opening the front panel, be sure to stop the operation and turn the breaker OFF.
Do not touch the metal parts on the inside of the indoor unit, as it may result in injury.

1. Air outlet
2. Display
3. Front panel
4. Louvers (vertical blades)
   - The louvers are inside of the air outlet.
5. Air inlet
6. Air filter
7. Flap (horizontal blade)
8. Cool mode lamp
9. Heat mode lamp
10. Dry mode lamp
11. Run lamp
12. LED display
13. Indoor Unit ON/OFF switch:
    - Push this switch once to start operation. Push once again to stop it.
    - The operation mode refers to the following table.

Model	Mode	Temperature setting	Air flow rate
HEAT PUMP	AUTO	77F (25C)	AUTO

    - This switch is useful when the remote controller is missing.
14. Signal receiver:
    - It receives signals from the remote controller.
    - When the unit receives a signal, you will hear a short beep.
    - Settings changed.....beep
15. Air outlet selection switch
16. Room temperature sensor:
    - It senses the air temperature around the unit.

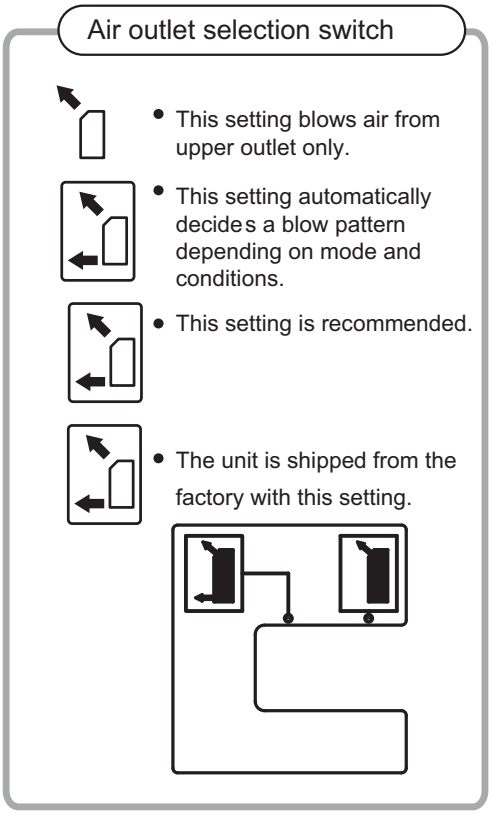

Fig. 1 – Indoor Unit

DISPLAY PANELS

NOTE: The display panel on the indoor unit can be turned on or off using the LIGHT button on the remote control.

* The temperature readout will be replaced by an error code if there is a malfunction.

REMOTE CONTROL PART NAMES

1 ON/OFF
Press it to start or stop operation

2 - : Press it to decrease temperature setting.

3 + : Press it to increase temperature setting

4 MODE
Press it to select operation mode (AUTO/COOL/DRY/FAN/HEAT)

5 FAN
Press it to set fan speed

6 SWING
Press it to set Up-Down Swing angle

7 FOLLOW ME

8 / Health or Air **(Function Not Available)**

9 SLEEP

10 TEMP

11 QUIET
Press it to set the QUIET function

12 CLOCK
Press it set clock

13 T-ON|T-OFF
Press it to set auto-off /auto-on timer.

14 TURBO

15 LIGHT
Press it to turn on/off the light .

16 X-FAN

Fig. 2 – Remote Control

NOTE: The FOLLOW ME button, formerly called the I FEEL button, possesses the same functionality. Starting on production of week 12 year 2016 (serial number 1216V15000).

REMOTE CONTROL

⚠ CAUTION

EQUIPMENT DAMAGE HAZARD

Failure to follow this caution may result in equipment damage. Handle the control with care and avoid getting the control wet.

NOTE: To switch between °C and °F, push the "MODE" and "–" button simultaneously while the remote controller is off.

IMPORTANT: The remote control can operate the unit from a distance of up to 25 ft. (7.6 m) as long as there are no obstructions. This is one way communication only (from remote control to fan coil).

The remote control can perform the following basic functions:

- Turn the system ON and OFF
- Select operating mode
- Adjust room air temperature set point and fan speed
- Adjust airflow direction

Battery Installation

Two AAA 1.5 v alkaline batteries (included) are required for operation of the remote control.

To install or replace batteries:

1. Slide the back cover off the control to open the battery compartment.
2. Remove old batteries if you are replacing the batteries.
3. Insert batteries. Follow the polarity markings inside the battery compartment.
4. Replace battery compartment cover.

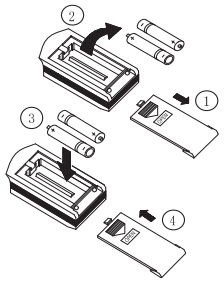

A08299

Fig. 3 – Battery Installation

NOTE:

1. When replacing batteries, do not use old batteries or a different type battery. This may cause the remote control to malfunction.
2. If the remote is not going to be used for several weeks, remove the batteries. Otherwise battery leakage may damage the remote control.
3. The average battery life under normal use is about 6 months.
4. Replace the batteries when there is no audible beep from the indoor unit or if the Transmission Indicator fails to light.

Remote Control Operation – Quick Start

NOTE: When transmitting a command from the remote control to the unit, be sure to point the control toward the LED display on the front panel of the unit. The unit confirms receipt of a command by sounding an audible beep.

1. Turn the unit on by pushing the **ON/OFF** button.
2. Select the desired mode by pushing the mode button.

Fig. 4 – Modes

3. Select the temperature set point by pointing the control toward the unit and pressing the "+" or "–" temperature set point buttons until the desired temperature appears on screen.
4. Select the desired fan speed by pressing the **FAN SPEED** button to select desired fan speed.

NOTE: If unit is operating in Dry mode, low fan speed will be displayed and the fan speed cannot be changed.

5. Set the airflow direction. When the unit is turned on, the louvers default to the cooling or heating position. The user can adjust the default Up–Down louver position by pushing the "SWING" button. For details on operating the SWING louvers, refer to the Remote Control Functions section.

Emergency Operation

If the remote control is lost, damaged, or the batteries are exhausted, the **ON/OFF** button on the unit can be used to run the unit.

Press the **ON/OFF** button once briefly when the system is off.

To stop emergency operation, push the **ON/OFF** button once.

REMOTE CONTROL FUNCTIONS

The remote control is the interface between the user and the floor console systems. Commands are entered by the user to control the system. Any command that has been entered with the remote control will remain in the memory until it is changed by the user or the batteries are replaced.

NOTE: When entering commands, point the remote control in the direction of the LED display on the front panel. The OPER appears for a short period of time on the remote control when the command is entered. The unit only emits an audible beep when the signals are received correctly.

ON/OFF:

Press this button to turn unit on and off.

MODE:

Each time this button is pressed, a mode is selected in a sequence that goes from AUTO, COOL, DRY, FAN and HEAT, as shown below:

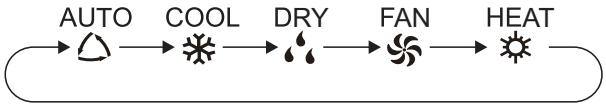

Fig. 5 – Modes

AUTO mode is the default setting at start–up. In AUTO mode, the set temperature will not be displayed on the LCD, and the unit automatically selects the suitable operation mode to provide comfort based on parameters set from the factory.

—:

Press this button once to decrease the setpoint by 1°F. If the button is pressed for more than two seconds, the setpoint decreases rapidly in increments of 1°F. In AUTO mode, set temperature is not adjustable.

+:

Press this button to increase the setpoint by 1°F. If the button is pressed for more than two seconds, the setpoint increases rapidly in increments of 1°F. In AUTO mode, set temperature is not adjustable.

COOL:

To cool to the selected set point and remove moisture.
System varies compressor speed to maintain desired temperature.

HEAT:

To heat to selected room set point. System varies compressor speed to maintain desired room temperature.

FAN:

This button is used to set the fan speed in the following sequence.

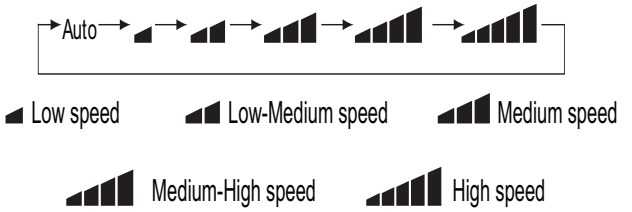

Fig. 6 – Fan speed

SWING:

Press the SWING button to select five different vertical (up and down) air discharge directions including Continuous Sweep. The Swing Louver icon appears. Press this button to set swing angle, which changes directions as shown below.

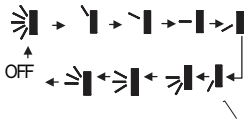

Fig. 7 – Swing buttons

Selecting Left–Right Direction of the Louver

The Left–Right louvers can be adjusted manually to direct the airflow to achieve optimal comfort in the space a knob can be found on the right side and the left side of the louvers.

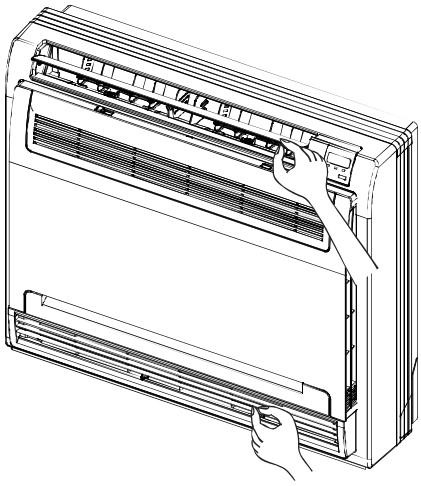

A150657

Fig. 8 – Left – Right Louver

FOLLOW ME:

Press this button to use the FOLLOW ME function, and the icon appears. The unit senses room temperature at the remote controller instead of at the indoor unit. It then adjusts airflow and temperature accordingly for the ultimate in personal comfort control and energy savings.

Press the button again to exit this function. For best performance, keep remote controller away from heat or cold temperature sources while using this function.

/

Press this button to achieve the on and off of healthy and scavenging functions in operation status.

NOTE: Function not available on this model.

SLEEP MODE:

The unit automatically adjusts room temperature during your sleep time. This slight change in temperature will not affect your comfort level due to the natural effects that sleeping has on the body, however it saves on energy consumption and lowers your electric bill.

The unit has three Sleep Modes to select from. Press the SLEEP button to select Sleep 1, Sleep 2, Sleep 3 or Cancel. The SLEEP icon appears.

SLEEP 1

In Cool, Dehumidify modes: sleep status after run for one hour, the main unit setting temperature increases 1.8°F (1°C),setting temperature increased 3.6 °F (2°C) , the unit will run at this setting temperature. In Heat mode: sleep status after running for one hour, the setting temperature decreases 1.8 °F (1°C), 2 hours, the setting temperature decreases 3.6°F (2°C), then the unit runs at this setting temperature.

SLEEP 2

In Sleep 2 the unit adjusts the room set temperature at a rate based on the starting set temperature value. Sleep Mode continues until cancelled.

DIY MODE SLEEP 3

1. Under Sleep 3 mode, hold “Turbo” button until the remote control enters into the user’s individuation sleep setting status, at this time, the time of remote control displays “1 hour”, the setting temperature “88” displays the corresponding temperature of the last setting sleep curve and blink (The first entering displays according to the initial curve setting value of original factory setting).
2. Adjust the “+” and “–” button, to change the corresponding setting temperature. After adjusted, press “Turbo” for confirmation.
3. At this time, 1 hour will be automatically increased at the timer position on the remote control, (that are “2 hours” or “3 hours” or “8 hours”), the place of setting temperature “88” displays the corresponding temperature of last setting sleep curve and blink.
4. Repeat the previous steps (2) & (3) operation, until 8 hours temperature setting finished, sleep curve setting finished, at this time, the remote control resumes the original timer display; displays the corresponding temperature of last setting sleep curve and blinks (The first setting entered displays according to the initial curve setting value of original factory setting); “2 hours” or “3 hours” or “8 hours”), the place of setting temperature “88” displays the corresponding temperature of the last setting sleep curve and blinks; the temperature display resumes to the original setting temperature. Sleep3– the sleep curve setting under SLEEP mode by DIY could be inquired: The user could use the existing sleep curve setting method to inquire the presetting sleep curve, enter into user individuation sleep setting status, but do not change the temperature, press “Turbo” button directly for confirmation.

NOTE: In the above presetting or enquiry procedure, if continuously within 10s, there is no button pressed, the sleep curve setting will automatically quit and resume to display the original displaying. In the presetting or inquiry procedure, press the “ON/OFF” button, “Mode” button, “Timer”button or “Sleep” button, the sleep curve setting or inquiry status will quit similarly. The Sleep mode continues until cancelled.

NOTE: During this procedure, if no button is pressed within 10 seconds, the remote controller automatically exits the sleep curve setting and resumes the original display. If the ON/OFF, MODE, TIMER, SLEEP, COOLING or HEATING button is pressed during the setting or inquiry procedure, the remote controller exits the sleep curve setting.

NOTE: Sleep function can not be set in AUTO mode.

QUIET

Press this button, the Quiet status is under the Auto Quiet mode (display "" and "Auto" signal) and Quiet mode (display "" signal) and Quiet OFF (there is no signal of "" displayed), after powered on, the Quiet OFF is defaulted. Note: the Quiet function cannot be set up in Fan and Dry mode; Under the Quiet mode (Display "" signal), the fan speed is not available.

CLOCK SETTING

Press this button to set clock time. The Clock icon on remote controller blinks. Within 5 seconds, press "+" or "–" button to set clock time. With each press of the "+" or "–" buttons, the clock time increases or decreases by 1 minute. To quickly adjust the time setting, press and hold "+" or "–" button for 2 seconds.

Release the button when you have reached the desired time setting. Press the "CLOCK" button to confirm the time, and clock icon stops blinking.

NOTE: Clock time adopts 24–hour mode. A 12–hour format is not available.

T–ON button (Timer ON)

To set when you want the unit to turn On at the end of a selected time period, use the button labeled "T–ON" on the remote controller. Press this button to make the clock icon disappear, replaced with the word "ON" (blinking). Press "+" or"–" buttons to adjust timer setting 1 minute at a time. Press and hold "+" or "–" button to set timer more quickly. Press"T–ON" button again to confirm setting, and the word "ON" stops blinking.
To cancel, press"T–ON" button again.

T–OFF button (Timer OFF)

NOTE: Under Timer On and Off status, you can set T–ON and T–OFF simultaneously. Before setting timer, be sure to set clock to correct time.

TEMP:

Press this button, you can see the indoor set temperature, indoor ambient temperature or outdoor ambient temperature on the indoor unit's display. The setting on the remote controller is selected circularly as shown in the following figure.

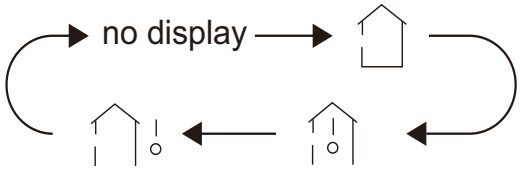

Fig. 9 – Temp Modes

When selecting with remote controller or no display, the temperature indicator on indoor unit displays set temperature; When selecting with the remote controller, temperature indicator on indoor unit displays indoor ambient temperature; When selecting with the remote controller, temperature indicator on indoor unit displays outdoor ambient temperature. 3s later it will return to the setting temperature or it depends on the other received signal within 3s.

IMPORTANT: When displaying the outdoor ambient, the displaying range is 32–99°F and 0–60°C. When it goes beyond the range, it keeps the threshold data (the smallest —0 or 32°F and the largest 99°F or 60°C).
Warm tips: When operating buttons on the cover please make sure the cover is closed completely.

TURBO:

The desired room set point can be achieved faster in TURBO mode. After selecting the "HEAT" or "COOL" mode button, push the "TURBO" button. The TURBO icon appears on the remote controller and the unit runs at an ultra– high speed. To deactivate the feature, push the "TURBO" button again. The unit returns to normal operation.

LIGHT:

This function allows the user to turn the display ON or OFF on the front panel.

Press the light icon to turn the indoor unit front panel ON or OFF. The remote control displays the Light Icon .

X–FAN:

Press the X–FAN button in COOL or DRY mode to activate the DRY function and the X–FAN icon appears. When this function is activated, the indoor fan continues to run for 2 minutes to dry the indoor coil after the unit is turned off. X–FAN is not available in AUTO, FAN and HEAT mode.

COMBINATION BUTTONS

Combination of "+" and "–" Buttons:

Press "+" and "–" buttons simultaneously for 8 seconds to lock or unlock the keypad. If the remote control is locked, is displayed. In this case, pressing any button, blinks three times to acknowledge the keypad is locked. Repeat the process to unlock the remote controller.

Combination of "MODE" and "–" Buttons:

Switch between Fahrenheit and Centigrade. At unit OFF, press the "MODE'" and "–" buttons simultaneously to switch between °C and °F.

Combination of "TEMP" and "CLOCK "Buttons:

Energy Savings Function

1. Press "TEMP" and "CLOCK" simultaneously in COOL mode to start the Energy Savings Function. The remote controller displays "SE".

2. Repeat the operation to quit the function.

46°F Heating Function

1. Press "TEMP" and "CLOCK" simultaneously in HEAT mode to start the "46°F" (8°C) Heating Function. The remote controller displays "$" and a selected temperature of "46°F" (8°C). Repeat the operation to quit the function.

CLEANING, MAINTENANCE AND TROUBLESHOOTING

⚠ CAUTION

ELECTRICAL SHOCK HAZARD

Failure to follow this caution may result in personal injury or death.
Always turn off power to the system before performing any cleaning or maintenance to the system. Turn off the outdoor disconnect switch located near outdoor unit. Be sure to disconnect indoor unit if on a separate switch

⚠ CAUTION

EQUIPMENT DAMAGE/OPERATION HAZARD

Failure to follow this caution may result in equipment damage or improper unit operation.
Operating the system with dirty air filters may damage the indoor unit and could cause reduced cooling performance, intermittent system operation, frost build–up on indoor coil or blown fuses.

Periodic Maintenance

Periodic maintenance is recommended to ensure proper operation of the unit. Recommended maintenance intervals may vary depending on the installation environment, e.g., dusty zones, etc. Refer to Table 1.

⚠ CAUTION

CUT HAZARD

Failure to follow this caution may result in personal injury.

The coil fins are very sharp. Use caution when cleaning.

Always wear safety protection.

Cleaning the Coil

Clean the coil at the beginning of each cooling season, or when necessary. Use a vacuum cleaner or a long–bristle brush to avoid damage to the coil fins.

Air Filters

Remove and clean the air filters once a month.

NOTE: If air filters show signs of excessive wear or are torn, they must be replaced. Contact your local dealer for replacement filters.

1. Open front panel on unit.
2. Pull filters down to remove.
3. Vacuum filters.
4. Clean with warm water.
5. Shake filter to remove excess water and dry thoroughly.
6. Replace filter by sliding into rack until filter snaps in place.
7. Close front panel on unit.

⚠ CAUTION

EQUIPMENT DAMAGE HAZARD

Failure to follow this caution may result in equipment damage.
When cleaning the front panel, do not use water hotter than 105°F (40.56°C) and do not pour water onto the fan coil. Do not use abrasive or petroleum based cleaners as they may damage the front panel.

Indoor Unit Front Panel

To clean the front panel on the indoor unit, wipe the outside with a soft, dry cloth. If necessary, a mild liquid detergent can be applied and wiped off with a dry cloth.

Preparing for Extended Shutdown Period

Clean the filters and reposition them in the unit. Operate the unit in Fan only mode for 12 hours to dry all internal parts.

Turn main power supply off and remove batteries from the remote control.

System Operation Recommendations

The items outlined in the following list helps to assure proper system operation:

- Replace both remote control batteries at the same time.
- Point the remote control toward the unit display panel when transmitting a command.
- Keep doors and windows closed while unit is operating.
- Contact an authorized service representative if a problem arises that cannot be easily resolved.
- Do not perform cleaning or maintenance activities while unit is on.
- Keep display panel on unit away from direct sunlight and heat as this may interfere with remote control transmissions.
- Do not block air intakes and outlets on the indoor or outdoor units.

Energy Saving Recommendations

The following recommendations add greater efficiency to the ductfree system:

- Select a comfortable thermostat setting and leave it at chosen setting. Avoid continually raising and lowering the setting.
- Keep unit filter clean. Frequent cleaning may be necessary depending on indoor air quality.
- Use drapes, curtains or shades to keep direct sunlight from heating room on very hot days.
- Do not obstruct air intake on front panel.
- Turn on air conditioning before indoor air becomes too uncomfortable.

Troubleshooting

Refer to Table 2 before contacting your local dealer.

Table 1—Periodic Maintenance

INDOOR UNIT	EVERY 3 MONTHS	EVERY 6 MONTHS	EVERY YEAR
Clean Air Filter*	•		•
Change Remote Control Batteries		•	
OUTDOOR UNIT	**EVERY 3 MONTHS**	**EVERY 6 MONTHS**	**EVERY YEAR**
Clean Outdoor Coil from Outside		•	
Clean Outdoor Coil from Inside†			•
Blow Air Over Electric Parts†			•
Check Electric Connection Tightening†			•
Clean Fan Wheel†			•
Check Fan Tightening†			•
Clean Drain Pans†			•

* Increase frequency in dusty zones.
† Maintenance to be carried out by qualified service personnel. Refer to the Installation Manual

Table 2—Troubleshooting

PROBLEM	POSSIBLE CAUSE	SOLUTION
Indoor unit emits a bad odor on start–up	• Air filter dirty • Output air still has odor after cleaning filter.	• Clean the air filter • Contact your service representative.
You hear water flowing noise when the unit is running	• This is normal and is the refrigerant flowing through the system.	• No maintenance required
Indoor unit produces a mist when the air conditioner is running	• This is normal cooling and is caused by high humidity and temperature in the room.	• No maintenance required. Mist should stop as room is cooled down and the humidity is removed.
Wireless remote control does not work	• Batteries are dead. • Unit needs to be reset.	• See battery replacement section in this manual and replace batteries. • Turn off power to indoor unit. Remove plug from wall and then reinsert plug. Restart unit.
Water leaks into room from Indoor unit	• Condensing water has overflowed	• Check indoor condensing drain or call your representative.
Unit/System Does Not Work	• To protect the unit upon an immediate restart after a stop, the system controller delays the unit for 3 minutes before allowing the unit to start back up. • The circuit breaker has tripped or a fuse has blown. • Power failure. • Error codes displayed • Voltage is too low.	• After turning unit off, wait at least 3 minutes before trying to restart. • Reset the circuit breaker or replace the fuse with the specified replacement fuse. • Restart operation when the power is restored. • Call your service representative. • Call your service representative.
Cooling is Not Working Properly	• The filter is blocked with dust. • Temperature is not set properly. • A window or door is open. • The outdoor unit is obstructed. • The fan speed is too low. • The operation mode is in Fan instead of Cool.	• Clean the air filter. • Check the temperature and reset if necessary. • Close the window or door. • Remove the obstruction. • Change the fan speed selection. • Change the operating mode to Cool or reset the unit.
Heating is Not Working Properly	• The filter is blocked with dust. • Temperature is set too low. • A window or door is open. • The outdoor unit is obstructed.	• Clean the air filter. • Check the temperature and reset if necessary. • Close the window or door. • Remove the obstruction.
Unit Stops During Operation	• The Off timer is not operating correctly. • Error codes displayed	• Restart the operating mode. • Call your service representative.

©2016 Bryant Heating & Cooling Systems • 7310 W. Morris St. • Indianapolis, IN 46231
Edition Date: 03/16

Catalog No. 619KF—02OM

Manufacturer reserves the right to discontinue, or change at any time, specifications or designs without notice and without incurring obligations.

Replaces: 619KF—01OM