Installation Instructions

Manufactured (Mobile) Home Installation and Gas Conversion Kit

KGAMH0101KIT

NOTE: Read the entire instruction manual before starting the installation.

This symbol → indicates a change since the last issue.

SAFETY CONSIDERATIONS

Installing and servicing heating equipment can be hazardous due to gas and electrical components. Only trained personnel should install or service heating equipment.

Untrained personnel can perform basic maintenance functions such as cleaning and replacing filters. All other operations should be performed by trained service personnel. When working on heating equipment, observe precautions in the literature, on tags, and on labels attached to the unit.

Follow all safety codes. In the United States, follow all safety codes including the National Fuel Gas Code (NFGC) NFPA No. 54-1996/ANSI Z223.1-1996. In Canada, refer to the current edition of the National Standard of Canada CAN/CGA-B149.1- and .2-M95 Natural Gas and Propane Installation Codes (NSCNGPIC).

Wear safety glasses and work gloves. Have a fire extinguisher available.

Recognize safety information. This is the safety-alert symbol ⚠ . When you see this symbol on the furnace and in instructions or manuals, be alert to the potential for personal injury.

Understand the signal words DANGER, WARNING, and CAUTION. These words are used with the safety-alert symbol. DANGER identifies the most serious hazards which **will** result in severe personal injury or death. WARNING signifies a hazard which **could** result in personal injury or death. CAUTION is used to identify unsafe practices which **would** result in minor personal injury or product and property damage.

⚠ WARNING: This conversion kit shall be installed by a qualified service agency in accordance with the manufacturer's instructions and all applicable codes and requirements of the authority having jurisdiction. If the information in these instructions is not followed exactly, a fire, explosion, or production of carbon monoxide may result causing property damage, personal injury, or loss of life. The qualified service agency performing this work assumes responsibility for the proper conversion of this furnace with this kit.
In Canada, the conversion shall be carried out in accordance with the requirements of the provincial authorities having jurisdiction and the National Standard of Canada Natural Gas and Propane Installation Code (NSCNGPIC).

⚠ AVERTISSEMENT: Cet ensemble de conversion ne doit être installé que par le représentant d'un organisme qualifié et conformément aux instructions du fabricant et à tous les codes et exigences applicables de l'autorité compétente. Quiconque ne respecte pas à la lettre les instructions dans le présent manuel risque de déclencher un incendie ou une explosion entraînant des dommages matériels, des lésions corporelles ou la perte de vies humaines. L'organisme qualifié qui effectue les travaux est responsable de la conversion correcte de ce générateur d'air chaud à l'aide de cet ensemble.

Form: AG-GAMH-04 Cancels: AG-GAMH-03 Printed in U.S.A. 4-97 Catalog No. 63GA-MH1

INTRODUCTION

This instruction covers the installation of kit Part No. KGAMH0101KIT in the following gas furnaces for manufactured (mobile) home applications.

→ This kit is for use in models 58MCA, 58MXA, 340MAV, 350MAV, 490AAV, and PG9MAA Hot Surface Ignition, Fixed-Capacity, Condensing Gas Furnaces. This kit is designed for use in furnaces with 40,000 through 120,000 Btuh gas input rates in direct vent applications.

→ **NOTE:** This kit is NOT applicable to 140 size units nor for non-direct vent applications.

⚠ **WARNING: Improper installation, adjustment, alteration, service, maintenance, or use can cause carbon monoxide poisoning, explosion, fire, electric shock, or other conditions which could result in personal injury or death. Consult a qualified installer, service agency, local gas supplier, or your distributor or branch for information or assistance. The qualified installer or agency must use only factory-authorized kits or accessories when modifying this product. Failure to follow instructions could result in serious injury or property damage.**

⚠ **CAUTION: Gas supply and electrical power MUST be shut off to the furnace before proceeding with conversion.**

DESCRIPTION AND USAGE

This kit is designed for use in the furnaces listed in the Introduction. These instructions describe the modifications required for use in a manufactured (mobile) home. See Table 1 for kit contents. This conversion uses a White-Rodgers 36E convertible (natural or propane) gas valve. More parts are shipped in the kit than will be needed to complete the conversion. When installation is complete, the extra parts are to remain with the furnace for future use.

This furnace must be installed in accordance with the manufacturer's instructions and Manufactured Home Construction and Safety Standard, Title 24 CFR, Part 3280 or, when such standard is not applicable, the ANSI A225.1, Standard for Manufactured Home Installation (Manufactured Home Sites, Communities and Set-Ups), or the Mobile Homes Standard CAN/CSA-Z240 MH Series-M86.

Ce générateur d'air chaud doit être installé conformément avec les instructions du fabricant et la norme intitulée Manufactured Home Construction and Safety Standard, Title 24 CFR, Part 3280 ou, lorsque cette norme ne s'applique pas, la norme ANSI A225.1, intitulée Standard for Manufactured Home Installation (Manufactured Home Sites, Communities and Set-Ups), ou la norme CAN/CSA-Z240 MH Série M86 de I'ACNOR, intitulée Maisons mobiles.

This furnace must be installed with a direct-vent (combustion air and flue) system and a factory accessory termination kit. In a direct-vent system, all air for combustion is taken directly from the outside atmosphere, and all flue products are discharged to the outside atmosphere. See furnace and factory accessory termination kit instructions for proper installation.

NOTE: The factory accessory termination kit when used for sidewall termination MUST NOT project more than 3 in. beyond the surface of the wall.

See the appropriate section for installation modification.

SECTION I: Initial Kit Installation

SECTION II: Conversion from Natural Gas to Propane

SECTION III: Conversion from Propane to Natural Gas

Table 1—Kit Contents

DESCRIPTION	PART NO.	QUANTITY
Gas Valve—Convertible (White-Rodgers 36E)	EF32CW195	1
Main Burner Orifice (Drill Size No. 55)	LH32DB201	7
Main Burner Orifice (Drill Size 1.30mm)	LH32DB210	7
Conversion Rating Plate Label	322263-101	1
Conversion Responsibility Label	322264-101	1
Manufactured (Mobile) Home Installation Label	322236-101	1
Adjusting Key	322226-201	1
Installation Instructions	AG-GAMH-04	1

INSTALLATION

SECTION I: INITIAL KIT INSTALLATION

PROCEDURE 1—SECURE FURNACE TO STRUCTURE

1. Install furnace on furnace coil (if used) and combustible floor base when required. (See furnace rating plate.)
2. Cut 4 pieces of perforated pipe strap (field supplied) each long enough to reach from furnace to structure.
3. Bend each piece 90 degrees and attach straps to furnace and/or coil casing using a No. 10 self tapping screw (field supplied). Attach other end to structure using 5/16-in. lag bolts (field supplied) securing furnace to structure. (See Fig. 1.)

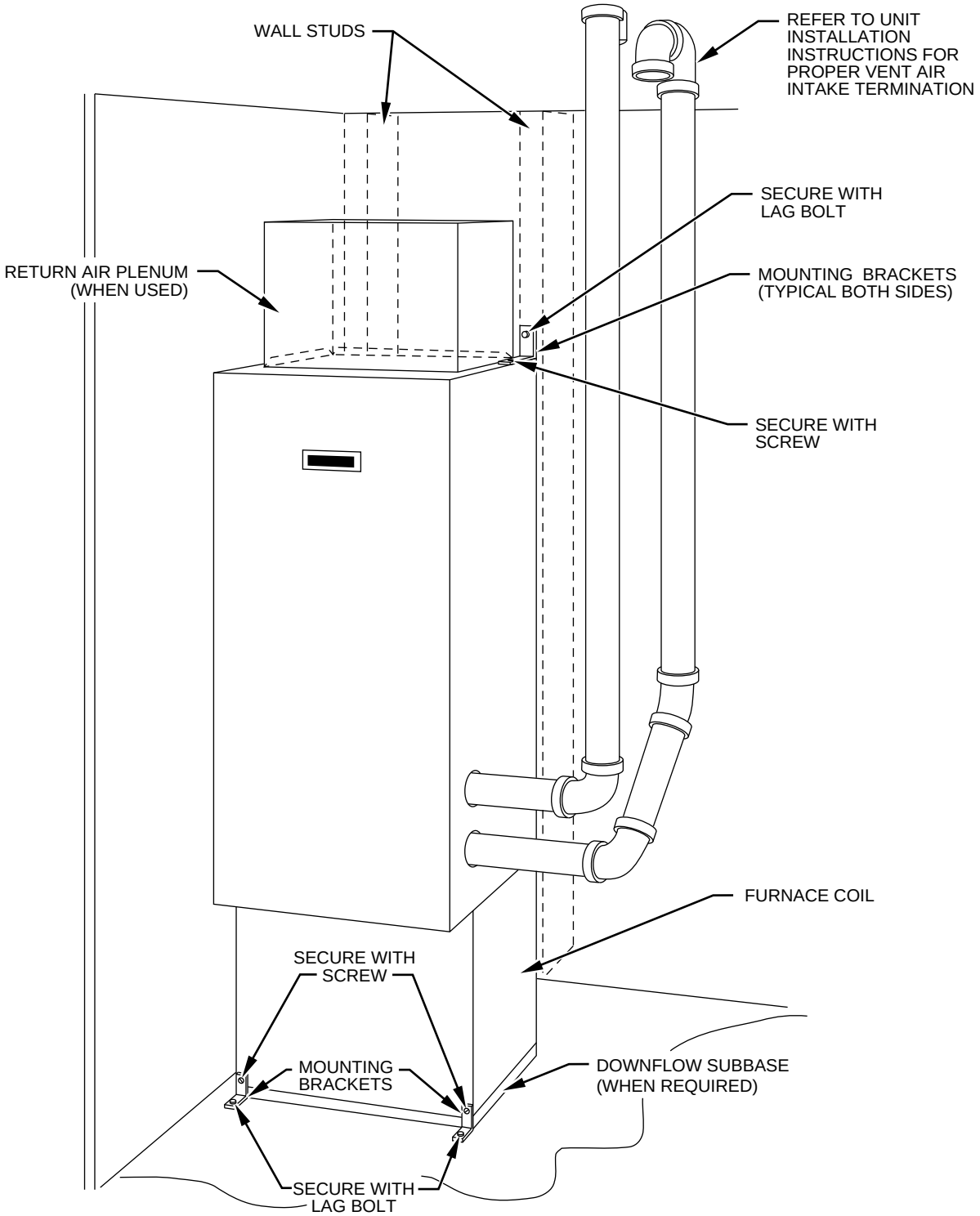

NOTE: Return-air plenum is not required when this direct vent furnace is installed in a dedicated confined space or installed in a space with other direct vent appliances. (Manufactured Home Construction and Safety Standards, Title 24 CFR, Part 3280.709.e.1).

A94350

Fig. 1—Securing Furnace to Structure

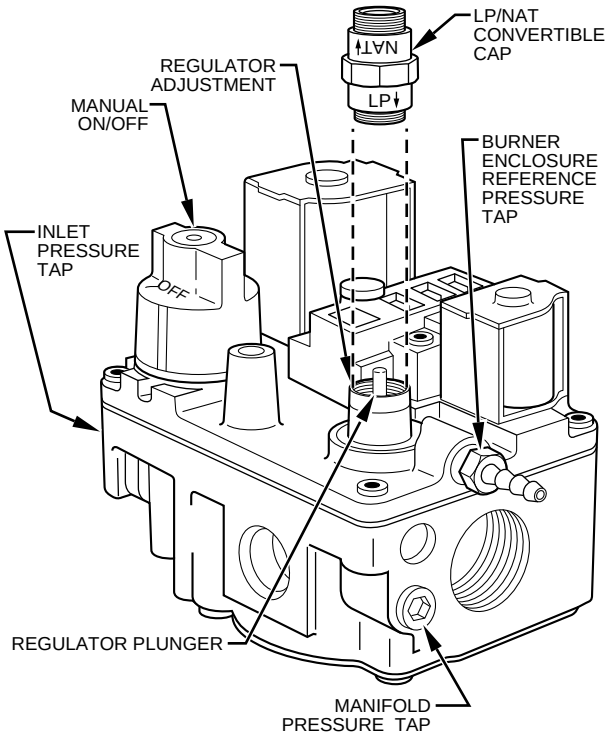

A94349

Fig. 2—Redundant Automatic Convertible Gas Valve

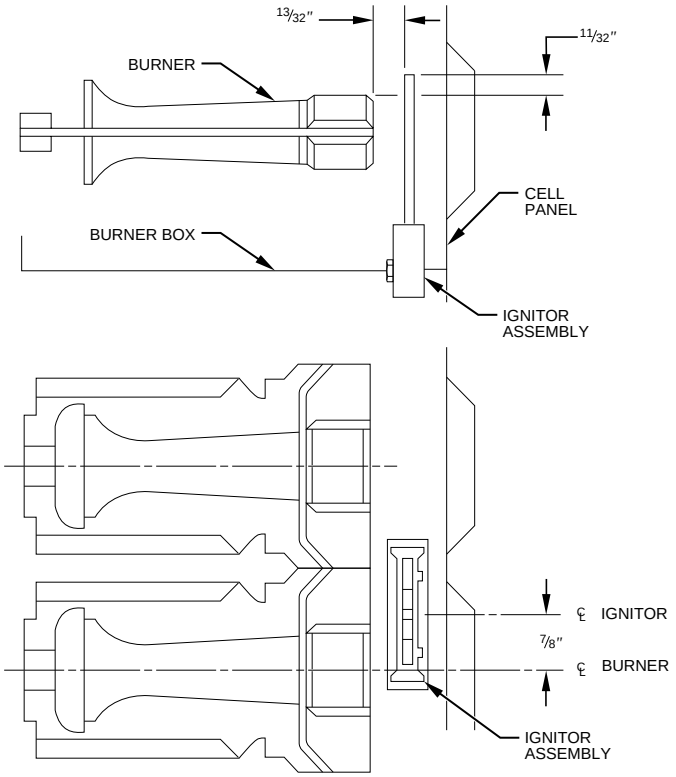

A93260

Fig. 3—Position of Ignitor to Burner

PROCEDURE 2—REPLACE GAS VALVE

1. Turn off gas and electrical supplies to furnace.
2. Remove main furnace door.
3. Turn furnace gas valve control knob to OFF position.
4. Remove burner enclosure front.
5. Remove gas supply pipe from gas valve (if installed).
6. Remove wires from gas valve. Note location for reassembly.

⚠ **CAUTION: Label all wires prior to disconnection when servicing controls. Wiring errors can cause improper and dangerous operation.**

⚠ **ATTENTION: Lors des opérations d'entretien des commandes, étiqueter tous les fils avant de les déconnecter. Toute erreur de câblage peut être une source de danger et de panne.**

---

7. Remove burner box pressure tube from gas valve burner enclosure reference pressure tap fittings. (See Fig. 2.)
8. Remove screws securing manifold to burner box. Remove manifold, orifices, and gas valve as 1 assembly.
9. Remove production gas valve from manifold assembly and discard valve.

NOTE: Production gas valve has a slotted cap on regulator adjustment cap. The convertible valve has cap marked NAT and LP.

10. Install new convertible gas valve to manifold.

NOTE: Use propane-gas-resistant pipe dope to prevent gas leaks. DO NOT use Teflon tape.

NOTE: If you will be converting furnace for use with propane, attach kit labels and extra parts bag as described in Procedure 3 then proceed to Section II.

11. Reinstall manifold, orifice, and gas valve assembly in burner box. Ensure manifold seal grommet is installed properly and burners fit over orifices. (See Fig. 3 for ignitor position.)
12. Reconnect wires to gas valve. Refer to furnace wiring schematic or as labeled earlier for proper wire location.
13. Reinstall burner box pressure tube to gas valve regulator fitting.
14. Reconnect gas supply pipe to gas valve using backup wrench on gas valve to prevent rotation and improper orientation.

⚠ **WARNING: Gas valve knob MUST be facing forward or tilted upward. Failure to follow this warning could result in property damage, personal injury, or death.**

NOTE: Use propane-gas-resistant pipe dope to prevent gas leaks. DO NOT use Teflon tape.

PROCEDURE 3—LABEL AND EXTRA PARTS BAG ATTACHMENT

NOTE: See Fig. 4 for label location.

1. Attach Conversion Responsibility Label (322264-101) to inside of main furnace door. Date, name, and address of organization making this conversion are required. (See Fig. 4.)
2. Attach Conversion Rating Plate Label (322263-101) to inside of lower left-hand side of controls compartment (downflow) as shown in Fig. 4.
3. Attach Manufactured (Mobile) Home Installation Label (322236-101) to inside of main furnace door. (See Fig. 4.)
4. Attach adhesive pouch containing gas orifices and Installation Instructions to front of main furnace door. (See Fig. 4.) Pouch must not cover or block vents on door.
5. Proceed to Section II or III for gas type modification and input rate adjustment.

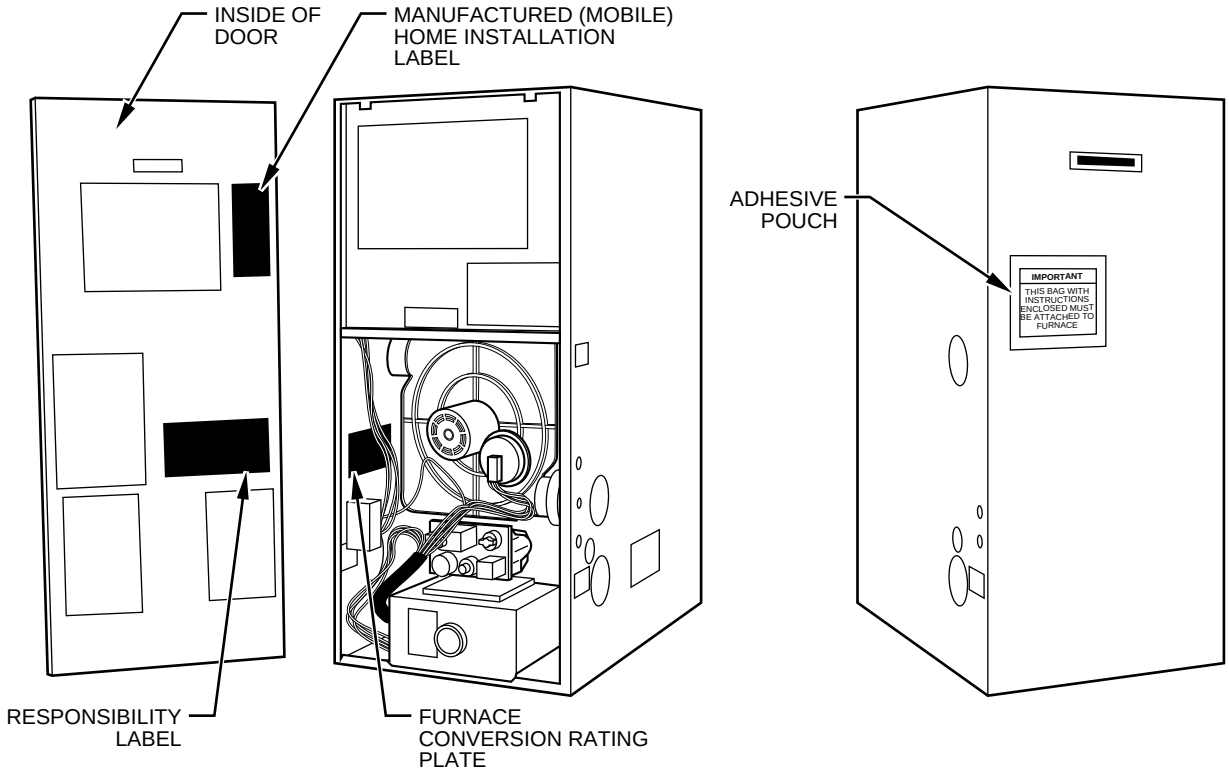

Fig. 4—Furnace Component and Conversion Label Location in Downflow Orientation

SECTION II: CONVERSION FROM NATURAL GAS TO PROPANE

PROCEDURE 1—INSTALL MAIN BURNER ORIFICES

NOTE: See Fig. 4 for component location.

1. Refer to Fig. 5 to determine main burner orifice size.

CONVERSION KIT RATING PLATE - CARRIER CORP.

THIS APPLIANCE HAS BEEN CONVERTED FOR MANUFACTURED (MOBILE) HOME APPLICATION. REFER TO KIT INSTRUCTIONS FOR CONVERSION PROCEDURES. USE PARTS SUPPLIED BY CARRIER CORPORATION AND INSTALLED BY QUALIFIED PERSONNEL. SEE EXISTING RATING PLATE FOR APPLIANCE MODEL NO. AND INPUT RATING.

NOTE: Furnace gas input rate on rating plate is for installations up to 2000 ft above sea level. In U.S.A. the input rating for altitudes above 2000 ft must be derated by 2% for each 1000 ft above sea level. In Canada the input rating must be derated by 5% for altitudes of 2000 ft to 4500 ft above sea level.

KIT NO. KGAMH0101KIT — **FUEL USED: PROPANE GAS** — **INLET PRESSURE (min - max): 11.0 - 13.6 in. wc**

APPLIANCE MODELS		ALTITUDE OF INSTALLATION (FT. ABOVE SEA LEVEL) U.S.A. *								
		0 to 2000	2001 * to 3000	3001 to 4000	4001 to 5000	5001 to 6000	6001 to 7000	7001 to 8000	8001 to 9000	9001 to 10000
58MXA, 58MCA, 340MAV, 350MAV, 490AAV, PG9MAA (All model sizes EXCEPT 140)	Orifice No.	55	55	55	55	1.30mm	1.30mm	1.30mm	1.30mm	1.30mm
	Mnfld Press	10.0	10.0	10.0	10.0	10.0	10.0	10.0	10.0	10.0

FUEL USED: NATURAL GAS — **INLET PRESSURE (min - max): 4.5 - 13.6 in. wc**

58MXA, 58MCA, 340MAV, 350MAV, 490AAV, PG9MAA (All model sizes EXCEPT 140)	Furnace supplied with 45 orifices. Adjust input rate using local natural gas heat content and application altitude to determine proper orifice size. See Installation Instructions.

* For Canadian Installations from 2000 to 4500 ft use U.S.A. column 2001 to 3000 ft. 322263-101 REV. C

A97182

→ **Fig. 5—Conversion Rating Plate Label**
(Used for Orifice Size Selection for Propane, Condensing Furnaces with 40,000 through 120,000 Btuh Input)

→ **NOTE:** This kit is NOT applicable to 140 Btuh input size units nor to non-direct vent applications.

2. Turn off gas and electrical supplies to furnace.
3. Remove main furnace door.
4. Turn furnace gas valve control knob to OFF position.
5. Remove burner enclosure front.
6. Remove gas supply pipe from gas valve.
7. Remove wires from gas valve. Note location for reassembly.

⚠ **CAUTION: Label all wires prior to disconnection when servicing controls. Wiring errors can cause improper and dangerous operation.**

⚠ **ATTENTION: Lors des opérations d'entretien des commandes, étiqueter tous les fils avant de les déconnecter. Toute erreur de câblage peut être une source de danger et de panne.**

8. Remove burner box pressure tube from gas valve burner enclosure reference pressure tap fittings. (See Fig. 2.)
9. Remove screws securing manifold to burner box. Remove manifold, orifices, and gas valve as 1 assembly.
10. Remove natural gas orifices from manifold and place them in the adhesive pouch which contained propane orifices. A bag is supplied marked "Natural Gas Orifices." Manufactured (mobile) home installations are required to have these materials located with furnace for future conversion.

11. Install main burner orifices. Do not use Teflon tape. Finger-tighten orifices at least 1 full turn to prevent cross-threading, then tighten with wrench. There are enough orifices in each kit for the largest furnace. Orifices of other sizes must be field supplied and are available through your local distributor.

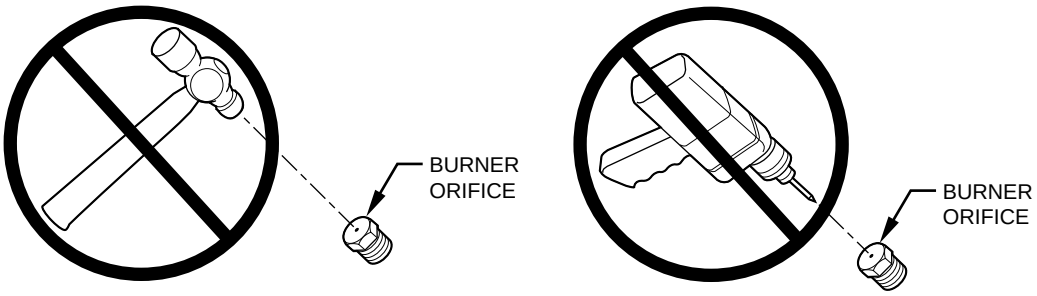

A96249

⚠ **CAUTION: DO NOT redrill burner orifices. Improper drilling (burrs, out-of-round holes, etc.) can cause excessive burner noise and misdirection of burner flames. This can result in flame impingement of the burners and heat exchangers, causing failure. Obtain new orifices if orifice size must be changed.**

12. Reinstall manifold, orifices, and gas valve assembly in burner box. Ensure manifold seal is installed properly and burners fit over orifices. (See Fig. 3.)
13. Reconnect wires to gas valve. Refer to furnace wiring schematic or as labeled earlier for proper wire location.
14. Reinstall burner box pressure tube to gas valve burner enclosure reference pressure tap. (See Fig. 2.)
15. Reinstall gas supply pipe to gas valve using backup wrench to prevent rotation and improper orientation.

NOTE: Use propane-gas-resistant pipe dope to prevent gas leaks. DO NOT use Teflon tape.

⚠ **WARNING: Gas valve knob MUST be facing forward or tilted upward. Failure to follow this warning could result in property damage, personal injury, or death.**

NOTE: DO NOT reinstall burner enclosure front at this time.

PROCEDURE 2—CHECK INLET GAS PRESSURE

NOTE: For propane applications, this kit is to be used only when inlet gas pressure is between 11.0-in. wc and 13.6-in. wc.

1. Be sure main gas and electric supplies to furnace are off.
2. Remove 1/8-in. pipe plug from inlet pressure tap on gas valve. (See Fig. 2.)
3. Attach manometer to inlet pressure tap on gas valve. (See Fig. 2.)

⚠ **CAUTION: DO NOT operate furnace more than 1 minute to check inlet gas pressure as conversion is not complete at this time.**

4. Turn on furnace power supply.
5. Turn gas supply manual shutoff valve to ON position.
6. Turn furnace gas valve control knob to ON position.
7. Jumper R and W thermostat connections to call for heat.
8. When main burners have ignited, confirm proper inlet gas pressure is between 11.0-in. wc and 13.6-in. wc for propane applications.
9. Remove jumper across R and W thermostat connections to terminate call for heat.
10. Turn furnace gas valve control knob to OFF position.
11. Turn gas supply manual shutoff valve to OFF position.
12. Turn off furnace power supply.

PROCEDURE 3—CHECK FURNACE OPERATION AND MAKE NECESSARY ADJUSTMENTS

1. Be sure main gas and electrical supplies to furnace are off.
2. Remove 1/8-in. pipe plug from manifold pressure tap on downstream side of gas valve. (See Fig. 2.)
3. Attach manometer to manifold pressure tap on gas valve. (See Fig. 2 and 6.)
4. Turn gas supply manual shutoff valve to ON position.
5. Turn furnace gas valve control knob to ON position.
6. Check all threaded pipe connections for gas leaks.

⚠ **WARNING: NEVER use matches, candles, flame, or other sources of ignition to check for gas leakage. Use soap-and-water solution to check for gas leaks. Failure to follow this warning could result in fire, explosion, personal injury, or death.**

7. Turn on furnace power supply.
8. Jumper R and W thermostat connections to call for heat.
9. Check manifold orifices for gas leaks when main burners ignite.

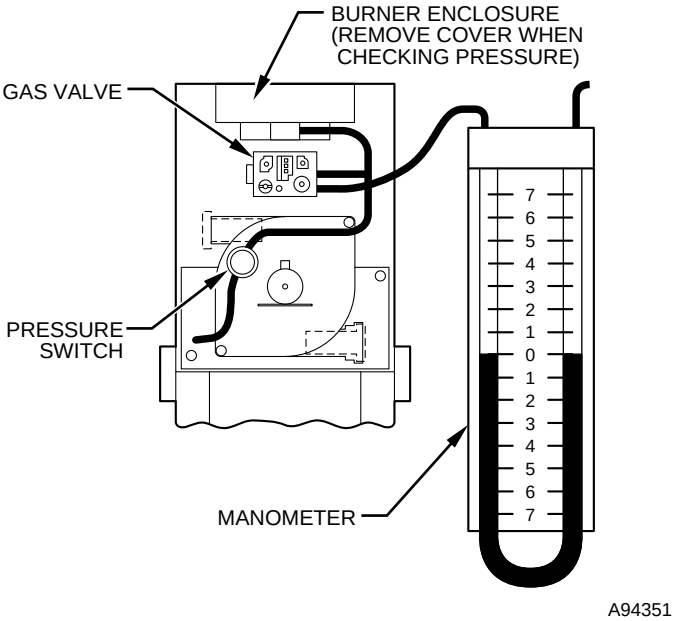

Fig. 6—Adjusting Manifold Pressure (Manometer Attachment)

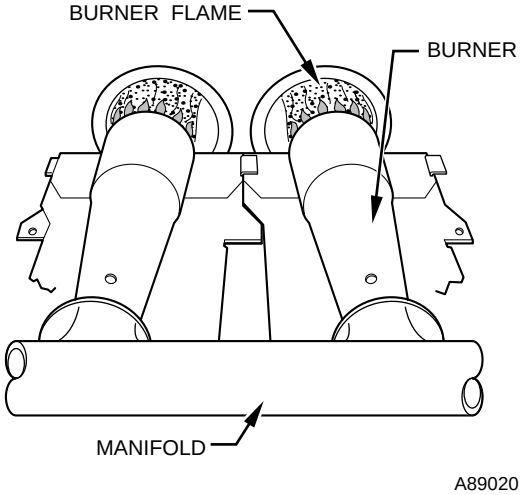

Fig. 7—Burner Flame

PROCEDURE 4—CHECK INPUT MANIFOLD PRESSURE

The gas input rate for propane is the same as for natural gas. See furnace rating plate for input rate. The input rate for propane is determined by manifold pressure only. (See Fig. 5.)

NOTE: Manifold pressure must always be measured with the burner enclosure front removed.

Furnace gas input rate on rating plate is for installations at altitudes up to 2000 ft.

In the U.S.A., the input rating for altitudes above 2000 ft must be reduced by 2 percent for each 1000 ft above sea level.

In Canada, the input rating must be derated by 5 percent for altitudes of 2000 ft to 4500 ft above sea level.

Furnace input rate must be within ±2 percent of input on furnace rating plate.

1. Orient LP/NAT cap for propane gas. The LP arrow should point toward gas valve. (See Fig. 2.)
2. Check input rate manifold pressure for propane gas. (See Fig. 5.) Manifold pressure must be between 9.5-in. wc and 10.5-in. wc.

NOTE: Gas valve NAT/LP regulator cap must be installed to activate LP regulator.

3. Main burner flame should be clear blue, almost transparent. (See Fig. 7.)
4. Remove jumper across R and W thermostat connections to terminate call for heat.
5. Turn furnace gas valve control knob to OFF position.
6. Turn off furnace power supply.
7. Remove manometer and replace manifold pressure tap plug. (See Fig. 2 and 6.)
8. Reinstall burner enclosure front.
9. Turn furnace gas valve control knob to ON position.
10. Turn on furnace power supply.
11. Set room thermostat to call for heat.
12. Check pressure tap plug for gas leaks when main burners ignite.
13. Observe unit operation through 2 complete heating cycles. See sequence of operation in furnace Installation, Start-Up, and Operating Instructions.
14. Set room thermostat to desired temperature.

PROCEDURE 5—LABEL MODIFICATION

NOTE: See Fig. 4 for label location.

1. Fill in Conversion Responsibility Label (322264-101) previously applied to inside of main furnace door by installer. Date, name, and address of organization making this conversion are required. Specify that unit is now converted for use with propane.
2. Place ALL unused parts, adjusting key, and these Installation Instructions in adhesive pouch attached to outside of main furnace door.
3. Reinstall main furnace door.

SECTION III: CONVERSION FROM PROPANE TO NATURAL GAS

PROCEDURE 1—INSTALL MAIN BURNER ORIFICES

NOTE: See Fig. 4 for component location.

1. Determine natural gas orifice size for correct input at installed altitude by using Table 2.

→ **NOTE:** This kit is NOT applicable to 140 Btuh input size units nor to non-direct vent applications.

Furnace gas input rate on rating plate is for installations at altitudes up to 2000 ft.

In the U.S.A., the input rating for altitudes above 2000 ft must be reduced by 2 percent for each 1000 ft above sea level.

In Canada, the input rating must be derated by 5 percent for altitudes of 2000 ft to 4500 ft above sea level.

a. Obtain yearly heat value average (at installed altitude) for local gas supply.

b. Obtain yearly specific gravity average for local gas supply.

c. Verify furnace model. Table 2 can only be used for fixed-capacity, multipoise, condensing furnaces with 40,000 through 120,000 Btuh input.

→ **NOTE:** This kit is NOT applicable to 140 Btuh input size units nor to non-direct vent applications.

d. Find installation altitude in Table 2.

NOTE: For Canada altitudes of 2000 to 4500 ft, use U.S.A. altitudes of 2001 to 3000 ft in Table 2.

e. Find closest natural gas heat value and specific gravity in Table 2.

f. Follow heat value line and specific gravity line to point of intersection to find orifice size and manifold pressure settings for proper operation at given natural gas condition.

> EXAMPLE: (Using Table 2 at 0—2000 ft altitude)
> Heat value 1050 Btu/cu ft
> Specific gravity 0.62
> Therefore, Orifice No. 45 is required.

g. If orifices require changing, continue with item 2 to change to correct orifice size. If orifice size is correct, proceed to Procedure 2.

2. Turn off gas and electrical supplies to furnace.
3. Remove main furnace door.
4. Turn furnace gas valve control knob to OFF position.
5. Remove burner enclosure front.
6. Remove gas supply pipe from gas valve.
7. Remove wires from gas valve. Note location for reassembly.

⚠ CAUTION: Label all wires prior to disconnection when servicing controls. Wiring errors can cause improper and dangerous operation.

⚠ ATTENTION: Lors des opérations d'entretien des commandes, étiqueter tous les fils avant de les déconnecter. Toute erreur de câblage peut être une source de danger et de panne.

---

8. Remove burner box pressure tube from gas valve burner enclosure reference pressure tap fittings. (See Fig. 2.)
9. Remove screws securing manifold to burner box. Remove manifold, orifices, and gas valve as 1 assembly.
10. Remove orifices from manifold and place them in the adhesive pouch attached to main furnace door. Manufactured (mobile) home installations are required to have these materials located with furnace for future conversion.

Table 2—Fixed-Capacity Multipoise Condensing Furnace Orifice Size and Manifold Pressure for Correct Input (Tabulated Data Based on 20,000 Btuh per Burner, Derated 2% for Each 1000 Ft Above Sea Level) For Use with 040 through 120 Size Furnaces Only

ALTITUDE RANGE (FT)		AVG GAS HEAT VALUE AT ALTITUDE (BTU/CU FT)	SPECIFIC GRAVITY OF NATURAL GAS									
			0.58		0.60		0.62		0.64		0.66	
			Orifice No.	Manifold Pressure	Orifice No.	Manifold Pressure	Orifice No.	Manifold Pressure	Orifice No.	Manifold Pressure	Orifice No.	Manifold Pressure
U.S.A. and Canada		850	43	3.7	43	3.8	42	3.2	42	3.3	42	3.4
		875	43	3.5	43	3.6	43	3.7	43	3.8	42	3.2
		900	44	3.7	43	3.4	43	3.5	43	3.6	43	3.7
	0	925	44	3.5	44	3.7	44	3.8	43	3.4	43	3.5
		950	44	3.4	44	3.5	44	3.6	44	3.7	44	3.8
	to	975	44	3.2	44	3.3	44	3.4	44	3.5	44	3.6
		1000	45	3.7	45	3.8	44	3.2	44	3.4	44	3.5
	2000	1025	45	3.5	45	3.6	45	3.7	44	3.2	44	3.3
		1050	45	3.3	45	3.4	45	3.6	45	3.7	45	3.8
		1075	45	3.2	45	3.3	45	3.4	45	3.5	45	3.6
		1100	47	3.6	47	3.7	45	3.2	45	3.4	45	3.5

ALTITUDE RANGE (FT)		AVG GAS HEAT VALUE AT ALTITUDE (BTU/CU FT)	SPECIFIC GRAVITY OF NATURAL GAS									
			0.58		0.60		0.62		0.64		0.66	
			Orifice No.	Manifold Pressure	Orifice No.	Manifold Pressure	Orifice No.	Manifold Pressure	Orifice No.	Manifold Pressure	Orifice No.	Manifold Pressure
U.S.A. and Canada	U.S.A.	775	43	3.8	42	3.2	42	3.3	42	3.4	42	3.5
	Altitudes	800	43	3.5	43	3.7	43	3.8	42	3.2	42	3.3
	2001	825	44	3.8	43	3.4	43	3.6	43	3.7	43	3.8
	to	850	44	3.6	44	3.7	44	3.8	43	3.5	43	3.6
	3000	875	44	3.4	44	3.5	44	3.6	44	3.7	43	3.4
	or	900	44	3.2	44	3.3	44	3.4	44	3.5	44	3.6
	Canada	925	45	3.7	45	3.8	44	3.2	44	3.3	44	3.4
	Altitudes	950	45	3.5	45	3.6	45	3.7	45	3.8	44	3.3
	2000	975	45	3.3	45	3.4	45	3.5	45	3.6	45	3.8
	to	1000	45	3.1	45	3.2	45	3.4	45	3.5	45	3.6
	4500	1025	45	3.0	45	3.1	45	3.2	45	3.3	45	3.4

ALTITUDE RANGE (FT)		AVG GAS HEAT VALUE AT ALTITUDE (BTU/CU FT)	SPECIFIC GRAVITY OF NATURAL GAS									
			0.58		0.60		0.62		0.64		0.66	
			Orifice No.	Manifold Pressure	Orifice No.	Manifold Pressure	Orifice No.	Manifold Pressure	Orifice No.	Manifold Pressure	Orifice No.	Manifold Pressure
U.S.A. Only		750	43	3.7	43	3.8	42	3.3	42	3.4	42	3.5
		775	43	3.5	43	3.6	43	3.7	43	3.8	42	3.2
		800	44	3.7	43	3.4	43	3.5	43	3.6	43	3.7
	3001	825	44	3.5	44	3.6	44	3.8	43	3.4	43	3.5
		850	44	3.3	44	3.4	44	3.5	44	3.7	44	3.8
	to	875	45	3.8	44	3.2	44	3.3	44	3.5	44	3.6
		900	45	3.6	45	3.7	45	3.8	44	3.3	44	3.4
	4000	925	45	3.4	45	3.5	45	3.6	45	3.7	44	3.2
		950	45	3.2	45	3.3	45	3.4	45	3.5	45	3.7
		975	45	3.0	45	3.2	45	3.3	45	3.4	45	3.5
		1000	45	2.9	45	3.0	45	3.1	45	3.2	45	3.3

ALTITUDE RANGE (FT)		AVG GAS HEAT VALUE AT ALTITUDE (BTU/CU FT)	SPECIFIC GRAVITY OF NATURAL GAS									
			0.58		0.60		0.62		0.64		0.66	
			Orifice No.	Manifold Pressure	Orifice No.	Manifold Pressure	Orifice No.	Manifold Pressure	Orifice No.	Manifold Pressure	Orifice No.	Manifold Pressure
U.S.A. Only		725	43	3.7	43	3.8	42	3.2	42	3.3	42	3.4
		750	43	3.4	43	3.5	43	3.7	43	3.8	42	3.2
		775	44	3.7	44	3.8	43	3.4	43	3.5	43	3.7
	4001	800	44	3.5	44	3.6	44	3.7	44	3.8	43	3.4
		825	44	3.2	44	3.4	44	3.5	44	3.6	44	3.7
	to	850	45	3.7	45	3.8	44	3.3	44	3.4	44	3.5
		875	45	3.5	45	3.6	45	3.7	44	3.2	44	3.3
	5000	900	45	3.3	45	3.4	45	3.5	45	3.6	45	3.8
		925	45	3.1	45	3.2	45	3.3	45	3.4	45	3.6
		950	45	3.0	45	3.1	45	3.2	45	3.3	45	3.4

Table 2—Fixed-Capacity Multipoise Condensing Furnace Orifice Size and Manifold Pressure for Correct Input Continued
(Tabulated Data Based on 20,000 Btuh per Burner, Derated 2% for Each 1000 Ft Above Sea Level)
For Use with 040 through 120 Size Furnaces Only

ALTITUDE RANGE (FT)		AVG GAS HEAT VALUE AT ALTITUDE (BTU/CU FT)	SPECIFIC GRAVITY OF NATURAL GAS									
			0.58		0.60		0.62		0.64		0.66	
			Orifice No.	Manifold Pressure	Orifice No.	Manifold Pressure	Orifice No.	Manifold Pressure	Orifice No.	Manifold Pressure	Orifice No.	Manifold Pressure
U.S.A. Only	5001 to 6000	700	43	3.6	43	3.7	42	3.2	42	3.3	42	3.4
		725	43	3.4	43	3.5	43	3.6	43	3.7	43	3.8
		750	44	3.6	44	3.7	43	3.4	43	3.5	43	3.6
		775	44	3.4	44	3.5	44	3.6	44	3.7	43	3.4
		800	44	3.2	44	3.3	44	3.4	44	3.5	44	3.6
		825	45	3.6	45	3.7	44	3.2	44	3.3	44	3.4
		850	45	3.4	45	3.5	45	3.6	45	3.8	44	3.2
		875	45	3.2	45	3.3	45	3.4	45	3.6	45	3.7
		900	45	3.0	45	3.1	45	3.3	45	3.4	45	3.5
		925	45	2.9	45	3.0	45	3.1	45	3.2	45	3.3
		950	45	2.7	45	2.8	45	2.9	45	3.0	45	3.1
		975	45	2.6	45	2.7	45	2.8	45	2.9	45	2.9
		1000	45	2.5	45	2.5	45	2.6	45	2.7	45	2.8

ALTITUDE RANGE (FT)		AVG GAS HEAT VALUE AT ALTITUDE (BTU/CU FT)	SPECIFIC GRAVITY OF NATURAL GAS									
			0.58		0.60		0.62		0.64		0.66	
			Orifice No.	Manifold Pressure	Orifice No.	Manifold Pressure	Orifice No.	Manifold Pressure	Orifice No.	Manifold Pressure	Orifice No.	Manifold Pressure
U.S.A. Only	6001 to 7000	650	42	3.2	42	3.3	42	3.4	42	3.5	42	3.6
		675	43	3.6	43	3.7	43	3.8	42	3.2	42	3.3
		700	44	3.8	43	3.4	43	3.6	43	3.7	43	3.8
		725	44	3.6	44	3.7	44	3.8	43	3.4	43	3.5
		750	44	3.3	44	3.4	44	3.6	44	3.7	44	3.8
		775	45	3.8	44	3.2	44	3.3	44	3.4	44	3.5
		800	45	3.5	45	3.7	45	3.8	44	3.2	44	3.3
		825	45	3.3	45	3.4	45	3.6	45	3.7	45	3.8
		850	45	3.1	45	3.2	45	3.4	45	3.5	45	3.6
		875	45	3.0	45	3.1	45	3.2	45	3.3	45	3.4

ALTITUDE RANGE (FT)		AVG GAS HEAT VALUE AT ALTITUDE (BTU/CU FT)	SPECIFIC GRAVITY OF NATURAL GAS									
			0.58		0.60		0.62		0.64		0.66	
			Orifice No.	Manifold Pressure	Orifice No.	Manifold Pressure	Orifice No.	Manifold Pressure	Orifice No.	Manifold Pressure	Orifice No.	Manifold Pressure
U.S.A. Only	7001 to 8000	625	43	3.8	42	3.3	42	3.4	42	3.5	42	3.6
		650	43	3.5	43	3.7	43	3.8	42	3.2	42	3.3
		675	44	3.8	43	3.4	43	3.5	43	3.6	43	3.7
		700	44	3.5	44	3.6	44	3.8	43	3.4	43	3.5
		725	44	3.3	44	3.4	44	3.5	44	3.6	44	3.7
		750	45	3.7	45	3.8	44	3.3	44	3.4	44	3.5
		775	45	3.5	45	3.6	45	3.7	45	3.8	44	3.3
		800	45	3.3	45	3.4	45	3.5	45	3.6	45	3.7
		825	45	3.1	45	3.2	45	3.3	45	3.4	45	3.5
		850	45	2.9	45	3.0	45	3.1	45	3.2	45	3.3

ALTITUDE RANGE (FT)		AVG GAS HEAT VALUE AT ALTITUDE (BTU/CU FT)	SPECIFIC GRAVITY OF NATURAL GAS									
			0.58		0.60		0.62		0.64		0.66	
			Orifice No.	Manifold Pressure	Orifice No.	Manifold Pressure	Orifice No.	Manifold Pressure	Orifice No.	Manifold Pressure	Orifice No.	Manifold Pressure
U.S.A. Only	8001 to 9000	600	43	3.8	42	3.3	42	3.4	42	3.5	42	3.6
		625	43	3.5	43	3.6	43	3.8	42	3.2	42	3.3
		650	44	3.7	43	3.4	43	3.5	43	3.6	43	3.7
		675	44	3.5	44	3.6	44	3.7	44	3.8	43	3.4
		700	44	3.2	44	3.3	44	3.4	44	3.6	44	3.7
		725	45	3.6	45	3.8	44	3.2	44	3.3	44	3.4
		750	45	3.4	45	3.5	45	3.6	45	3.8	44	3.2
		775	45	3.2	45	3.3	45	3.4	45	3.5	45	3.6
		800	45	3.0	45	3.1	45	3.2	45	3.3	45	3.4

Table 2—Fixed-Capacity Multipoise Condensing Furnace Orifice Size and Manifold Pressure for Correct Input Continued
(Tabulated Data Based on 20,000 Btuh per Burner, Derated 2% for Each 1000 Ft Above Sea Level)
For Use with 040 through 120 Size Furnaces Only

ALTITUDE RANGE (FT)		AVG GAS HEAT VALUE AT ALTITUDE (BTU/CU FT)	SPECIFIC GRAVITY OF NATURAL GAS									
			0.58		0.60		0.62		0.64		0.66	
			Orifice No.	Manifold Pressure	Orifice No.	Manifold Pressure	Orifice No.	Manifold Pressure	Orifice No.	Manifold Pressure	Orifice No.	Manifold Pressure
U.S.A. Only		**575**	43	3.8	42	3.2	42	3.3	42	3.5	42	3.6
		600	43	3.5	43	3.6	43	3.7	42	3.2	42	3.3
	9001	**625**	44	3.7	44	3.8	43	3.5	43	3.6	43	3.7
		650	44	3.4	44	3.5	44	3.7	44	3.8	43	3.4
	to	**675**	45	3.8	44	3.3	44	3.4	44	3.5	44	3.6
		700	45	3.6	45	3.7	45	3.8	44	3.3	44	3.4
	10,000	**725**	45	3.3	45	3.4	45	3.6	45	3.7	45	3.8
		750	45	3.1	45	3.2	45	3.3	45	3.4	45	3.5
		775	45	2.9	45	3.0	45	3.1	45	3.2	45	3.3

11. Install properly sized main burner orifices. Do not use Teflon tape. Finger-tighten orifices at least 1 full turn to prevent cross-threading, then tighten with wrench. There are enough orifices in each kit for the largest furnace. Orifices of other sizes must be field supplied and are available through your local distributor.

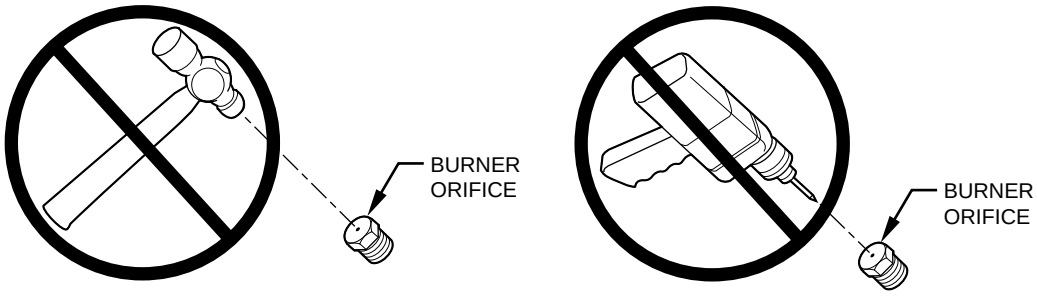

A96249

⚠ CAUTION: DO NOT redrill burner orifices. Improper drilling (burrs, out-of-round holes, etc.) can cause excessive burner noise and misdirection of burner flames. This can result in flame impingement of the burners and heat exchangers, causing failure. Obtain new orifices if orifice size must be changed.

12. Reinstall manifold, orifice, and gas valve assembly in burner box. Ensure manifold seal is installed properly and burners fit over orifices. (See Fig. 3.)
13. Reconnect wires to gas valve. Refer to furnace wiring schematic or as labeled earlier for proper wire location.
14. Reinstall burner box pressure tube to gas valve burner enclosure reference pressure tap. (See Fig. 2.)
15. Reinstall gas supply pipe to gas valve using backup wrench to prevent rotation and improper orientation.

NOTE: Use propane-gas-resistant pipe dope to prevent gas leaks. DO NOT use Teflon tape.

⚠ WARNING: Gas valve knob MUST be facing forward or tilted upward. Failure to follow this warning could result in property damage, personal injury, or death.

NOTE: DO NOT reinstall burner enclosure front at this time.

PROCEDURE 2—CHECK INLET GAS PRESSURE

NOTE: For natural gas applications, this kit is to be used only when inlet gas pressure is between 4.5-in. wc and 13.6-in. wc.

1. Be sure main gas and electric supplies to furnace are off.
2. Remove 1/8-in. pipe plug from inlet pressure tap on gas valve. (See Fig. 2.)
3. Attach manometer to inlet pressure tap on gas valve.

⚠ CAUTION: DO NOT operate furnace more than 1 minute to check inlet gas pressure as conversion is not complete at this time.

4. Turn on furnace power supply.
5. Turn gas supply manual shutoff valve to ON position.
6. Turn furnace gas valve control knob to ON position.

7. Jumper R and W thermostat connections to call for heat.
8. When main burners have ignited, confirm proper inlet gas pressure is between 4.5-in. wc and 13.6-in. wc for natural gas applications.
9. Remove jumper across R and W thermostat connections to terminate call for heat.
10. Turn furnace gas valve control knob to OFF position.
11. Turn gas supply manual shutoff valve to OFF position.
12. Turn off furnace power supply.

PROCEDURE 3—CHECK FURNACE OPERATION AND MAKE NECESSARY ADJUSTMENTS

1. Be sure main gas and electrical supplies to furnace are off.
2. Remove 1/8-in. pipe plug from manifold pressure tap on downstream side of gas valve. (See Fig. 2.)
3. Attach manometer to manifold pressure tap on gas valve. (See Fig. 2 and 6.)
4. Turn gas supply manual shutoff valve to ON position.
5. Turn furnace gas valve control knob to ON position.
6. Check all threaded pipe connections for gas leaks.

⚠ WARNING: NEVER use matches, candles, flame, or other sources of ignition to check for gas leakage. Use soap-and-water solution to check for gas leaks. Failure to follow this warning could result in fire, explosion, personal injury, or death.

---

7. Turn on furnace power supply.
8. Jumper R and W thermostat connections to call for heat.
9. Check manifold orifices for gas leaks when main burners ignite.

PROCEDURE 4—SET GAS INPUT RATE

Furnace gas input rate on rating plate is for installations at altitudes up to 2000 ft.

In the U.S.A., the input rating for altitudes above 2000 ft must be reduced by 2 percent for each 1000 ft above sea level.

In Canada, the input rating must be derated by 5 percent for altitudes of 2000 ft to 4500 ft above sea level.

Furnace input rate must be within ±2 percent of input on furnace rating plate.

1. Determine natural gas orifice size and manifold pressure for correct input.
   a. Obtain yearly heat value average (at installed altitude) from local gas supplier.
   b. Obtain yearly specific gravity average from local gas supplier.
   c. Verify furnace model. Table 2 can only be used for fixed-capacity, multipoise, condensing furnaces with 40,000 through 120,000 Btuh input.

NOTE: This kit is NOT applicable to furnaces with 140 Btuh input.

   d. Find installation altitude in Table 2.

NOTE: For Canada altitudes of 2000 to 4500 ft, use U.S.A. altitudes of 2001 to 3000 ft in Table 2.

   e. Find closest natural gas heat value and specific gravity in Table 2.
   f. Follow heat value and specific gravity lines to point of intersection to find orifice size and manifold pressure settings for proper operation.

> EXAMPLE: (Using Table 2 at 0—2000 ft altitude)
> Heating value = 1050 Btu/cu ft
> Specific gravity = 0.62
> Therefore: Orifice No. 45
> Manifold pressure 3.6-in. wc

   g. Check and verify burner orifice size in furnace. NEVER ASSUME ORIFICE SIZE; ALWAYS CHECK AND VERIFY.

2. Adjust manifold pressure to obtain input rate.

NOTE: Manifold pressure must always be measured with burner enclosure front REMOVED.

   a. Remove burner enclosure front.
   b. Remove cap that conceals adjustment screw for gas valve regulator. (See Fig. 2.)
   c. Turn adjusting screw using supplied ADJUSTING KEY either counterclockwise (out) to decrease input rate or clockwise (in) to increase rate. (See Fig. 8.)
   d. When correct input is obtained, replace cap that conceals gas valve regulator adjustment screw making sure cap is oriented properly for natural gas. The NAT arrow should be pointing toward gas valve. (See Fig. 2.)
   e. Replace burner enclosure front and verify adjusted gas input rate using method outlined in item 3.

⚠ CAUTION: Be sure burner enclosure front is in place after adjustments have been made.

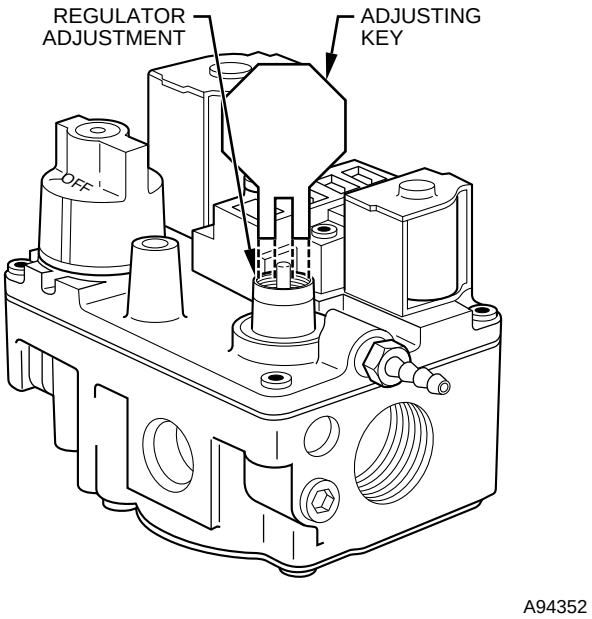

Fig. 8—Adjusting Natural Gas Input (Adjusting Key)

f. Look through sight glass in burner enclosure and check burner flame. Burner flame should be clear blue, almost transparent. (See Fig. 7.)

3. Verify natural gas input rate by clocking gas meter.

NOTE: Gas meter must always be clocked with burner enclosure front INSTALLED.

NOTE: Be sure all pressure tubing, combustion-air and vent pipes, and burner enclosure front are in place when checking input by clocking gas meter.

a. Calculate high-altitude adjustment (if required).

UNITED STATES

At altitudes above 2000 ft, this furnace has been approved for a 2% derate for each 1000 ft above sea level. See Table 3 for derate multiplier factor and example.

Table 3—Altitude Derate Multiplier for U.S.A.

ALTITUDE (FT)	% OF DERATE	DERATE MULTIPLIER FACTOR FOR U.S.A.*
0—2000	0	1.00
2001—3000	4—6	0.95
3001—4000	6—8	0.93
4001—5000	8—10	0.91
5001—6000	10—12	0.89
6001—7000	12—14	0.87
7001—8000	14—16	0.85
8001—9000	16—18	0.83
9001—10,000	18—20	0.81

* Derate multiplier factor is based on midpoint altitude for altitude range.

EXAMPLE:
100,000 Btuh input furnace installed at 4300 ft.

Furnace Input Rate at Sea Level	X	Derate Multiplier Factor	=	Furnace Input Rate at Installation Altitude
100,000	X	0.91	=	91,000

CANADA

At installation altitudes from 2000 to 4500 ft, this furnace must be derated 5% by an authorized Gas Conversion Station or Dealer. To determine correct input rate for altitude, see example above and use 0.95 as derate multiplier factor.

b. Turn off all other gas appliances and pilots.

c. Start furnace and let operate for 3 minutes.

d. Measure time (in sec) for gas meter test dial to complete 1 revolution.

e. Refer to Table 4 for cu ft of gas per hr.

f. Multiply gas rate (cu ft/hr) X heating value (Btu/cu ft) using natural gas heating value from local gas utility/supplier.

Table 4—Gas Rate (Cu Ft/Hr)

SECONDS FOR 1 REVOLUTION	SIZE OF TEST DIAL			SECONDS FOR 1 REVOLUTION	SIZE OF TEST DIAL		
	1 cu ft	2 cu ft	5 cu ft		1 cu ft	2 cu ft	5 cu ft
10	360	720	1800	**50**	72	144	360
11	327	655	1636	**51**	71	141	355
12	300	600	1500	**52**	69	138	346
13	277	555	1385	**53**	68	136	340
14	257	514	1286	**54**	67	133	333
15	240	480	1200	**55**	65	131	327
16	225	450	1125	**56**	64	129	321
17	212	424	1059	**57**	63	126	316
18	200	400	1000	**58**	62	124	310
19	189	379	947	**59**	61	122	305
20	180	360	900	**60**	60	120	300
21	171	343	857	**62**	58	116	290
22	164	327	818	**64**	56	112	281
23	157	313	783	**66**	54	109	273
24	150	300	750	**68**	53	106	265
25	144	288	720	**70**	51	103	257
26	138	277	692	**72**	50	100	250
27	133	267	667	**74**	48	97	243
28	129	257	643	**76**	47	95	237
29	124	248	621	**78**	46	92	231
30	120	240	600	**80**	45	90	225
31	116	232	581	**82**	44	88	220
32	113	225	563	**84**	43	86	214
33	109	218	545	**86**	42	84	209
34	106	212	529	**88**	41	82	205
35	103	206	514	**90**	40	80	200
36	100	200	500	**92**	39	78	196
37	97	195	486	**94**	38	76	192
38	95	189	474	**96**	38	75	188
39	92	185	462	**98**	37	74	184
40	90	180	450	**100**	36	72	180
41	88	176	439	**102**	35	71	178
42	86	172	429	**104**	35	69	173
43	84	167	419	**106**	34	68	170
44	82	164	409	**108**	33	67	167
45	80	160	400	**110**	33	65	164
46	78	157	391	**112**	32	64	161
47	76	153	383	**116**	31	62	155
48	75	150	375	**120**	30	60	150
49	73	147	367				

EXAMPLE: (0—2000 ft altitude)
Furnace input is 100,000 Btuh
Btu heating input = Btu/cu ft X cu ft/hr
Heating value of gas = 975 Btu/cu ft
Time for 1 revolution of 2-cu ft dial = 70 sec
Gas rate = 103 cu ft/hr (from Table 4)
Btu heating input = 103 X 975 = 100,425 Btuh
In this example, the orifice size and manifold pressure adjustment is within ±2 percent of the furnace input rate.

NOTE: Measured gas input must be within ±2 percent of that stated on furnace rating plate when installed at sea level or derated per that stated above when installed at higher altitudes.

4. Remove jumper across R and W thermostat connections to terminate call for heat.
5. Turn furnace gas valve control knob to OFF position.
6. Turn off furnace power supply.
7. Remove manometer and replace manifold pressure tap plug. (See Fig. 2 and 6.)

NOTE: Use propane-gas-resistant pipe dope to prevent gas leaks. DO NOT use Teflon tape.

8. Turn furnace gas valve control knob to ON position.
9. Turn on furnace power supply.
10. Set room thermostat to call for heat.
11. Check pressure tap for gas leak when main burners ignite.

12. Check for correct burner flame. (See Fig. 7.)
13. Observe unit operation through 2 complete heating cycles. See sequence of operation in furnace Installation, Start-Up, and Operating Instructions.
14. Set room thermostat to desired temperature.

PROCEDURE 5—LABEL MODIFICATION

NOTE: See Fig. 4 for label location.

1. Fill in Conversion Responsibility Label (322264-101) previously applied to inside of main furnace door by installer. Date, name, and address of organization making this conversion are required. Specify that unit is now converted for use with natural gas.
2. Place ALL unused parts, adjusting key, and these Installation Instructions in adhesive pouch attached to outside of main furnace door.
3. Reinstall main furnace door.

SERVICE TRAINING

Packaged Service Training programs are an excellent way to increase your knowledge of the equipment discussed in this manual, including:

- Unit Familiarization
- Maintenance
- Installation Overview
- Operating Sequence

A large selection of product, theory, and skills programs is available, using popular video-based formats and materials. All include video and/or slides, plus companion book.

Classroom Service Training plus "hands-on" the products in our labs can mean increased confidence that really pays dividends in faster troubleshooting, fewer callbacks. Course descriptions and schedules are in our catalog.

CALL FOR FREE CATALOG 1-800-962-9212

[ ] Packaged Service Training [ ] Classroom Service Training

A94328