HEATING & COOLING PRODUCTS

D5FUAA
Crossover Air Handler
Sizes 18K to 60K

Product Data

A220908

Fig. 1 —Sizes 18 to 60

NOTE: Images are for illustration purposes only. Actual models may differ slightly.

TABLE OF CONTENTS

	PAGE
SAFETY CONSIDERATIONS	2
INDUSTRY LEADING FEATURES / BENEFITS	4
MODEL NUMBER NOMENCLATURE	5
STANDARD FEATURES AND ACCESSORIES	6
DIMENSIONS	7
CLEARANCES	9
SPECIFICATIONS	9
APPLICATION DATA	10
INDOOR UNIT WIRING	10
WIRING REQUIREMENTS	11
CONTROL SYSTEM	11
WIRED REMOTE CONTROLLERS	11
SPECIFIC WIRING METHODS	12
DIP SWITCH DEFINITIONS	14
AIR FLOW DATA	18
SOUND PRESSURE	18
SOUND PRESSURE IN OCTAVE BANDS	18
SOUND PRESSURE TESTING METHOD	20
FAN AND MOTOR SPECIFICATIONS	20
WIRING DIAGRAMS	21
TROUBLESHOOTING	24
GUIDE SPECIFICATIONS	25

SAFETY CONSIDERATIONS

Installing, starting up, and servicing air-conditioning equipment can be hazardous due to system pressures, electrical components, and equipment location (roofs, elevated structures, etc.).
Only trained, qualified installers and service mechanics should install, start- up, and service this equipment.

Untrained personnel can perform basic maintenance functions such as coil cleaning. All other operations should be performed by trained service personnel only.

When working on the equipment, observe the precautions in the literature and on tags, stickers, and labels attached to the equipment.

Follow all safety codes.Wear safety glasses and work gloves. Keep a quenching cloth and a fire extinguisher nearby when brazing. Use care in handling, rigging, and setting bulky equipment.
Read these instructions thoroughly and follow all warnings or cautions included in the literature and attached to the unit. Consult local building codes and National Electrical Code (NEC) for special requirements.
Recognize safety information.

This is the safety - alert symbol ⚠.

When you see this symbol on the unit and in instructions or manuals, be alert to the potential for personal injury. Understand these signal words: **DANGER**, **WARNING**, and **CAUTION**. These words are used with the safety- alert symbol.

DANGER identifies the most serious hazards which will result in severe personal injury or death.

WARNING signifies hazards which could result in personal injury or death.

CAUTION is used to identify unsafe practices which may result in minor personal injury or product and property damage.

NOTE is used to highlight suggestions which will result in enhanced installation, reliability, or operation.

⚠ WARNING

ELECTRICAL SHOCK HAZARD

Failure to follow this warning could result in personal injury or death.

Before installing, modifying, or servicing system, the main electrical disconnect switch must be in the OFF position. There may be more than 1 disconnect switch. Lock out and tag switch with a suitable warning label.

⚠ WARNING

EXPLOSION HAZARD

Failure to follow this warning could result in death, serious personal injury, and/or property damage.

Never use air or gases containing oxygen for leak testing or operating refrigerant compressors. Pressurized mixtures of air or gases containing oxygen can lead to an explosion.

⚠ CAUTION

EQUIPMENT DAMAGE HAZARD

Failure to follow this caution may result in equipment damage or improper operation.

Do not bury more than 36 in. (914 mm) of refrigerant pipe in the ground. If any section of pipe is buried, there must be a 6 in. (152 mm) vertical rise to the valve connections on the outdoor units. If more than the recommended length is buried, refrigerant may migrate to the cooler buried section during extended periods of system shutdown. This causes refrigerant slugging and could possibly damage the compressor at start-up.

⚠ WARNING

This appliance is not intended for use by persons (including children) with reduced physical, sensory or mental capabilities, or lack of experience and knowledge, unless they have been given supervision or instruction concerning use of the appliance by a person responsible for their safety. Children should be supervised to ensure that they do not play with the appliance.

⚠ WARNING

Only use the specified wire. If the wire is damaged, it must be replaced by the manufacturer, its service agent or similarly qualified persons in order to avoid a hazard. The product must be properly grounded at the time of installation, or electric shock may occur.

For all electrical work, follow all local and national wiring standards, regulations, and the Installation Manual. Connect the cables tightly, and clamp them securely to prevent external forces from damaging the terminal. Improper electrical connections can overheat and cause fire, and may also cause shock. All electrical connections must be made according to the Electrical Connection Diagram located on the panels of the indoor and outdoor units.

All wiring must be properly arranged to ensure that the control board cover can close properly. If the control board cover is not closed properly, it can lead to corrosion and cause the connection points on the terminal to heat up, catch fire, or cause electrical shock.

Disconnection must be incorporated in the fixed wiring in accordance with NEC, CSA and Local Codes. **Do not** share the electrical outlet with other appliances. Improper or insufficient power supply can cause fire or electric shock.

If connecting power to fixed wiring, an all-pole disconnection device which has at least 3mm clearances in all poles, and have a leakage current that may exceed 10mA, the residual current device (RCD) having a rated residual operating current not exceeding 30mA, and disconnection must be incorporated in the fixed wiring in accordance with NEC, CSA and Local Codes.

⚠ WARNING

Turn off the air conditioner and disconnect the power before performing any installation or repairing. Failure to do so can cause electric shock.

Installation must be performed by an authorized dealer or specialist. Defective installation can cause water leakage, electrical shock, or fire. Installation must be performed according to the installation instructions.

Improper installation can cause water leakage, electrical shock, or fire. Contact an authorized service technician for repair or maintenance of this unit. This appliance shall be installed in accordance with national wiring regulations.

Only use the included accessories, parts, and specified parts for installation. Using non-standard parts can cause water leakage, electrical shock, fire, and can cause the unit to fail.

Install the unit in a firm location that can support the unit's weight. If the chosen location cannot support the unit's weight, or the installation is not done properly, the unit may drop and cause serious injury and damage. Install drainage piping according to the instructions in this manual. Improper drainage may cause water damage to your home and property. For units that have an auxiliary electric heater, do not install the unit within 3 feet (1 meter) of any combustible materials.

If combustible gas accumulates around the unit, it may cause fire.

Do not turn on the power until all work has been completed.

When moving or relocating the air conditioner, consult experienced service technicians for disconnection and re-installation of the unit.

Read the information for details in "indoor unit installation" and "outdoor unit installation" sections.

NOTE: The air conditioner's circuit board (PCB) is designed with a fuse to provide over-current protection. The specifications of the fuse are printed on the circuit board, for example: T3.15AL/250VAC, T5AL/250VAC, T3.15A/250VAC, T5A/250VAC, T20A/250VAC, T30A/250VAC,etc.

NOTE: Only a blast-proof ceramic fuse can be used.

⚠ WARNING

PERSONAL INJURY AND PROPERTY DAMAGE HAZARD

For continued performance, reliability, and safety, the only approved accessories and replacement parts are those specified by the equipment manufacturer. The use of non-manufacturer approved parts and accessories could invalidate the equipment limited warranty and result in a fire risk, equipment malfunction, and failure.

Please review the manufacturer's instructions and replacement parts catalogs available from your equipment supplier.

Table 1 — Symbols displayed on the indoor unit or outdoor unit

	WARNING	This symbol shows that this appliance used a flammable refrigerant. If the refrigerant is leaked and exposed to an external ignition source, there is a risk of fire.
	CAUTION	This symbol shows that the operation manual should be read carefully
	CAUTION	This symbol shows that a service personnel should be handling this equipment with reference to the installation manual.
	CAUTION	
	CAUTION	This symbol shows that information is available such as the operating manual or installation manual.

⚠ WARNING

FOR FLAMMABLE REFRIGERANTS

Do not use means to accelerate the defrosting process or to clean, other than those recommended by the manufacturer.

The appliance shall be stored in a room without continuously operating ignition sources (for example: open flames, an operating gas appliance or an operating electric heater).

Do not pierce or burn. Be aware that refrigerants may not contain an odor.

NOTE: Risk of Fire. Flammable refrigerant used. To be repaired only by trained service personnel. Do not puncture refrigerant tubing.

INDUSTRY LEADING FEATURES / BENEFITS

A PERFECT BALANCE BETWEEN BUDGET LIMITS, ENERGY SAVINGS AND COMFORT

The **D5FUAA** series air handler units are a matched combination of outdoor condensing units connected only by refrigerant tubing and wires.

This selection of fan coils permits creative solutions to design problems such as:

- Add-ons to current space (an office or family room addition)
- Special space requirements
- When changes in the load cannot be handled by the existing system
- Historical renovations or any application where preserving the look of the original structure is essential.

LOW SOUND LEVELS

When noise is a concern, the **D5FUAA** is the answer. The indoor units are whisper quiet. There are no compressors indoors, either in the conditioned space or directly over it, and there is none of the noise usually generated by air being forced through ductwork.

SECURE OPERATION

If security is an issue, outdoor and indoor units are connected only by refrigerant piping and wiring to prevent intruders from crawling through the ductwork. In addition, since outdoor units can be installed close to an outside wall, coils are protected from vandals and severe weather.

FAST INSTALLATION

This compact ductless system is simple to install. This makes the air handler systems the equipment of choice, especially in retrofit situations.

On all indoor units, service and maintenance expense is reduced due to easy accessible service panels. In addition, these air handler systems have extensive self-diagnostics to assist in troubleshooting.

LEAK MITIGATION SYSTEM

The unit Includes a leak mitigation system, and there is no need to re-orient the leak sensor for different install positions.

115V CONVERSION CAPABLE

This unit can be to be converted to 115V applications.

BUILT-IN RELIABILITY

The air handler system indoor and outdoor units are designed to provide years of trouble-free operation.

The air handler indoor units include protection against freeze-up and high evaporator temperatures on heat pumps.

The condensing units on the heat pumps are protected by a three minute delay that provides over-current protection and high temperature protection prior to the start of the compressor.

ECONOMICAL OPERATION

The air handler system design allows individual or multi-room heating or cooling when required. There is no need to run large supply-air fans or chilled water pumps to handle a few spaces with unique load patterns.

EASY-TO-USE CONTROLS

The air handler units have microprocessor-based controls to provide the ultimate in comfort and efficiency. The user-friendly control provides the interface between the user and the unit.

MULTI-POISE INSTALLATION

Designed for maximum installation flexibility. The secondary drain built-in allows the unit to be mounted in an upflow, downflow, left or right installation depending on existing conditions.

24V INTERFACE

The built-in 24V Interface allows users to control the system with a third party thermostat.

AGENCY LISTINGS

All systems are listed with AHRI (Air Conditioning, Heating & Refrigeration Institute), UL/ETL and CSA.

Manufacturer reserves the right to change, at any time, specifications and designs without notice and without obligations.

MODEL NUMBER NOMENCLATURE

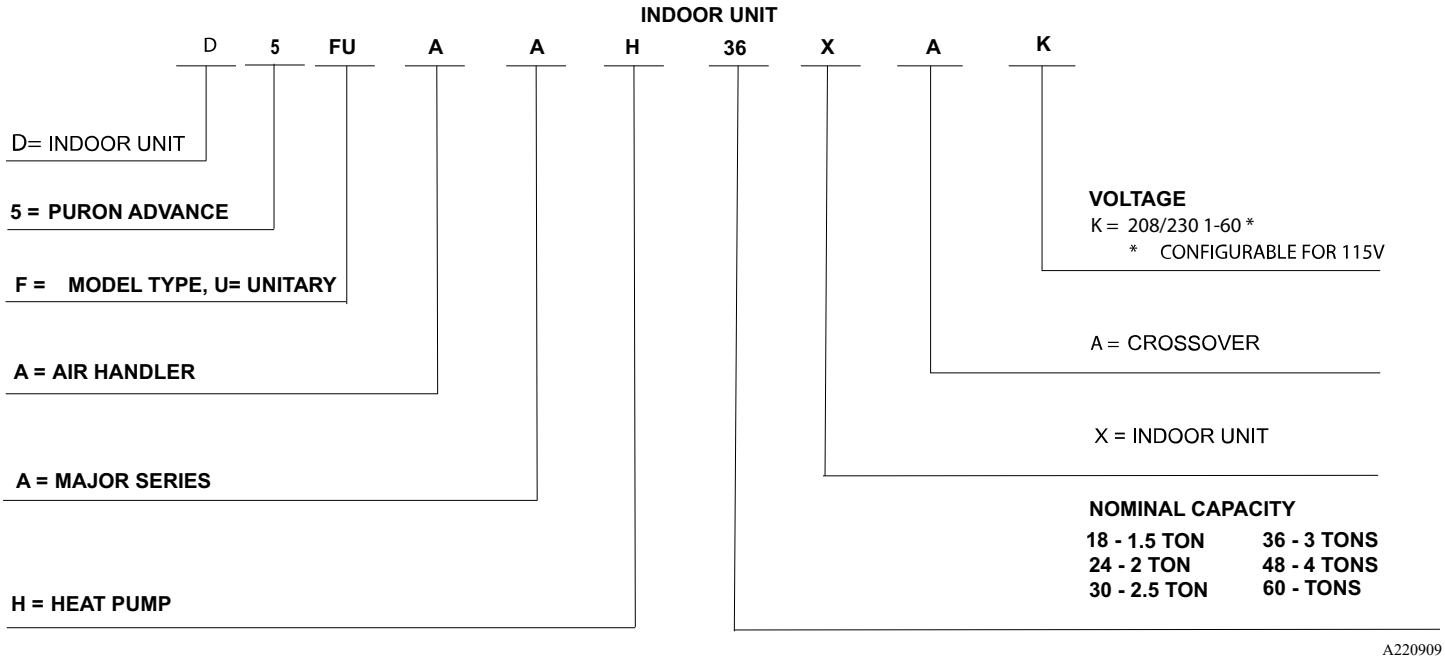

Fig. 2 — Model Number Nomenclature

Fig. 3 — AHRI Certified

STANDARD FEATURES AND ACCESSORIES

Table 1 — Standard Features

EASE OF INSTALLATION	
Low Voltage Controls	S
COMFORT FEATURES	
Microprocessor Controls	S
24V Interface built-in for third party thermostat controls	S
Wireless Remote Controller	S
Wired Remote Controller (Sold separately)	A
Auto Restart Function	S
Cold Blow Protection on Heat Pumps	S
Freeze Protection Mode on Heat Pumps	S
Turbo Mode	S
Auto Changeover on Heat Pumps	S
SAFETY AND RELIABILITY	
Indoor Coil Freeze Protection	S
Anti-corrosive pre-coated fins	S
Indoor Coil High Temp Protection in Heating Mode	S
EASE OF SERVICE AND MAINTENANCE	
Cleanable Filters	S
Diagnostics	S
APPLICATION FLEXIBILITY	
Multi-poise Installation	S

Legend

S - Standard
A - Accessory

Table 2 — Accessories

ORDERING NO.	DESCRIPTION	FOR MODELS
EHKMC05KN	Electric Heater Kit 5kW	18K, 24K, 30K, 36K
EHKMC08KN	Electric Heater Kit 8kW	18K, 24K, 30K, 36K, 48K
EHKMC10KN	Electric Heater Kit 10kW	18K, 24K, 30K, 36K, 48K, 60K
EHKMC15KN	Electric Heater Kit 15kW	24K, 30K, 36K, 48K, 60K
EHKMC20KN	Electric Heater Kit 20kW	36K, 48K, 60K
EHKMC25KN	Electric Heater Kit 25kW	60K

NOTE: The unit is NOT equipped with a single point electrical connection for electric heater, air purifier or other peripherals. A separate power supply is required.

MULTI-POISE INSTALLATION

Designed for maximum installation flexibility. The secondary drain built-in allows the unit to be mounted in an upflow, downflow, left or right installation depending on existing conditions.

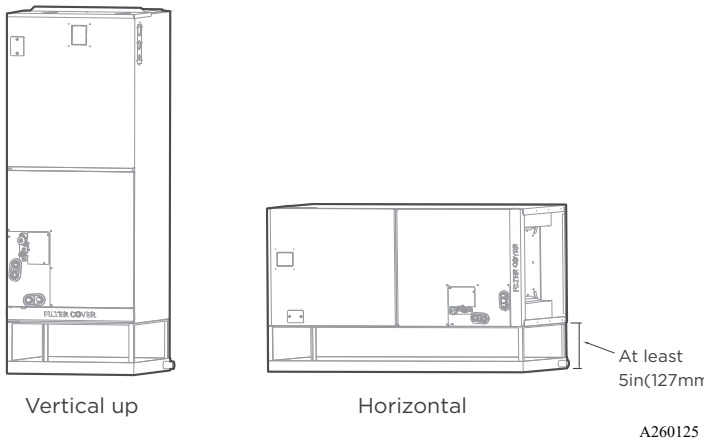

Fig. 4 — Vertical or Horizontal

NOTE: For horizontal installation a secondary drain pan (not supplied) must be installed. At least 5” of clearance is required between the bottom of the air handler and secondary pan for proper drainage to occur

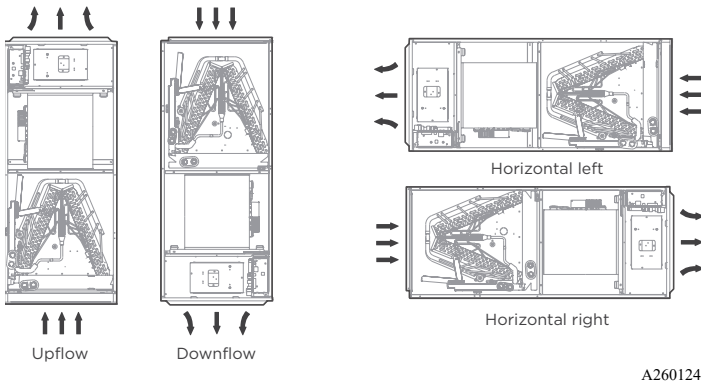

Fig. 5 — Installation Directions

NOTE: Vertical up and horizontal left installation does not need to change the direction of evaporator.

DIMENSIONS

Table 3 — Dimensions

MODEL (BTU/H) / DIMENSIONS		18K/24K	30K/36K	48K/60K
A	inch	45	49	53
	mm	1143	1245	1346
B	inch	21	21-1/50	21
	mm	533	534	533
C	inch	17-1/2	21-1/50	24-1/2
	mm	445	534	622
D	inch	15-3/4	19-5/16	22-27/32
	mm	400	490	580
E	inch	10-1/4	10-1/4	10-1/4
	mm	260	260	260

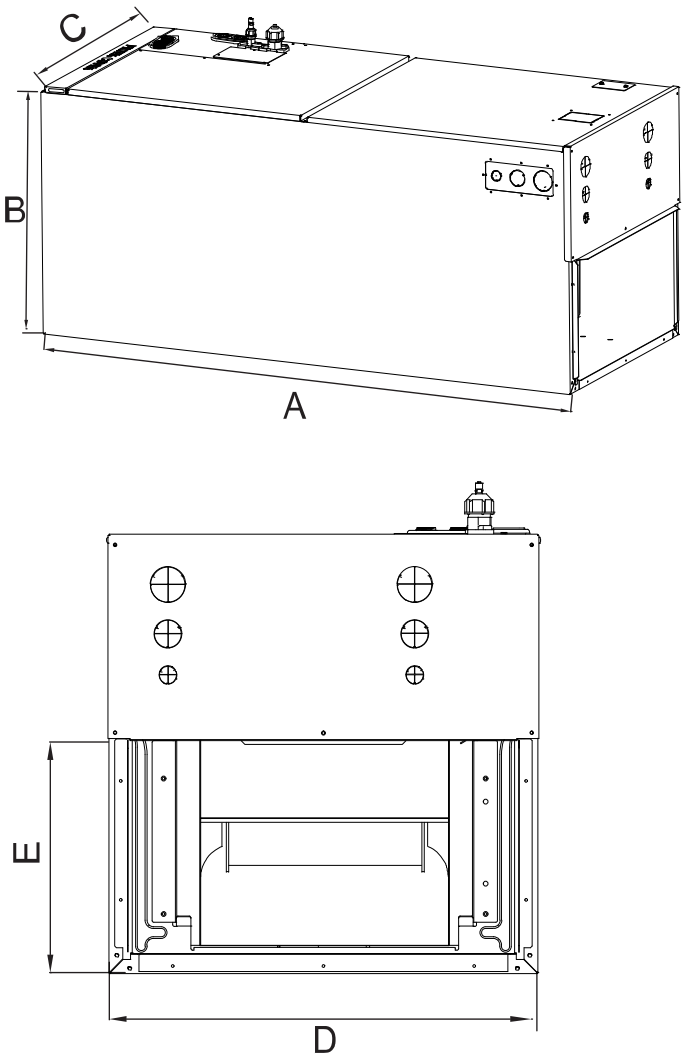

A220911

Table 4 – D5FUAA Dimensions

DIMESNSIONS AND WEIGHTS (AIR HANDLER MODELS)							
SYSTEM SIZE		18K	24K	30K	36K	48K	60K
		(208/230 V)	(208/230 V)	(208/230 V)	(208/230 V)	(208/230 V)	(208/230 V)
Height (H)	in (mm)	45.00(1143)	45.00(1143)	49.02(1245)	49.02(1245)	52.99(1346)	52.99(1346)
Width (W)	in (mm)	17.52(445)	17.52(445)	21.02(534)	21.02(534)	24.49(622)	24.49(622)
Depth (D)	in (mm)	21.02(534)	21.02(534)	21.02(534)	21.02(534)	21.02(534)	21.02(534)
Weight -Net	lbs. (kg)	105.82(48)	105.60(47.9)	128.97(58.5)	129.41(58.7)	162.92(73.9)	162.92(73.9)
PACKAGING							
Height	in (mm)	21.20(640)	21.20(640)	21.20(640)	21.20(640)	21.20(640)	21.20(640)
Width	in (mm)	48.23(1225)	48.23(1225)	52.17(1325)	52.17(1325)	56.30(1430)	56.30(1430)
Depth	in (mm)	21.06(535)	21.06(535)	24.61(625)	24.61(625)	28.15(715)	28.15(715)
Weight-Gross	lbs. (kg)	126.76(57.5)	127.43(57.8)	153.44(69.6)	153.88(69.8)	(190.92)86.6	(190.92)86.6
Carton Drawing No.	--	ZXW-1210*520*625 S-NS	ZXW-1210*520*625 S-NS	ZXW-1310*610*625 S-NS	ZXW-1310*610*625 S-NS	ZXW-1415*700*625 S-NS	ZXW-1415*700*625 S-NS
Carton Material	--	Double corrugated cardboard					
Material Thickness	in (mm)	0.276(7)	0.276(7)	0.276(7)	0.276(7)	0.276(7)	0.276(7)

Fig. 6 —D5FUAA Filter Dimensions

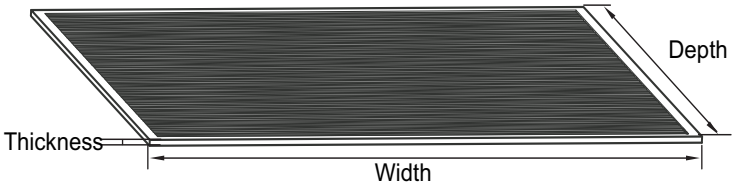

A220850

Model (Btu/h)	Width		Depth		Thickness	
	Inch	mm	Inch	mm	Inch	mm
18-24K	16	406.4	20	508	1	25.4
30-36K	19-1/2	495.3	20	508	1	25.4
48K-60K	23	584.2	20	508	1	25.4

NOTE: The user needs to purchase a standard filter that meets the requirements of UL900. For questions about the selection of filters, consult the manufacturer.

CLEARANCES

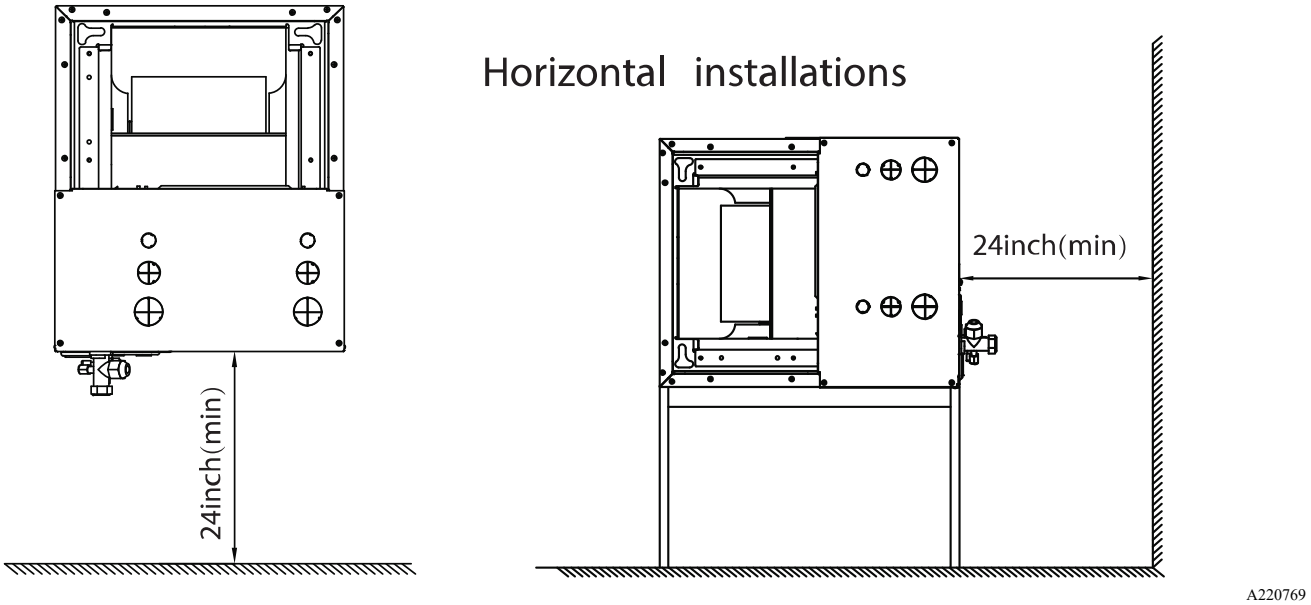

Fig. 7 — Clearances

SPECIFICATIONS

Table 5 — Specifications

System	Indoor Size		18K	24K	30K	36K	48K	60K
Electrical	Voltage, Phase, Cycle	V/Ph/Hz	115-208/230-1-60	115-208/230-1-60	115-208/230-1-60	115-208/230-1-60	115-208/230-1-60	115-208/230-1-60
	Minimum Circuit Ampacity (MCA) 115V	A	5.5	5.5	8	8	14.5	14.5
	Minimum Circuit Ampacity (MCA) 208/230V	A	4	4	6	6	11	11
	Recommended Fuse Size	A.	5	5	5	10	10	10
	MOP - Fuse Rating	A.	15	15	15	15	15	15
Operating Range	Cooling Indoor DB Min - Max	°F(°C)	60~90 (16~32)	60~90 (16~32)	60~90 (16~32)	60~90 (16~32)	60~90 (16~32)	60~90 (16~32)
	Heating Indoor DB Min - Max	°F(°C)	32~86(0~30)	32~86(0~30)	32~86(0~30)	32~86(0~30)	32~86(0~30)	32~86(0~30)
Piping	Pipe Connection Size - Liquid	in (mm)	3/8 (9.52)	3/8 (9.52)	3/8 (9.52)	3/8 (9.52)	3/8 (9.52)	3/8 (9.52)
	Pipe Connection Size - Suction	in (mm)	3/4 (19)	3/4 (19)	3/4 (19)	3/4 (19)	3/4 (19)	3/4 (19)
Refrigerant	Refrigerant Type		R454B	R454B	R454B	R454B	R454B	R454B
	Metering Device		EEV	EEV	EEV	EEV	EEV	EEV
Indoor Coil	Face Area	Sq. Ft.	3	3	4.13	4.13	4.38	4.88
	No. Rows		3	3	4	4	4	5
	Fins per inch		20	20	20	20	20	20
	Circuits		6	6	10	10	14	14
Airflow & Sound	Number of Fan Speeds (low/med/high/turbo)		4	4	4	4	4	4
	Nominal Airflow (lowest to highest)	CFM	488/529/576/618	629/694/759/824	712/806/894/1088	865/971/1082/1188	906/1094/1282/1471	1135/1359/1582/1806
	Cooling Sound Pressure (low to high)	dB(A)	30.5/31.4/33.4/35.2	33.6/36.6/38.7/40.4	37.7/41.3/43.0/45.6	40.2/43.2/45.7/48.0	42.5/47.1/50.3/54.0	45.0/49.1/52.1/55.3
	Heating Sound Pressure (low to high)	dB(A)	29.8/30.7/34.0/35.3	32.4/36.9/39.6/40.6	29.5/36.9/43.0/43.2	35.6/40.7/46.8/46.7	43.7/46.8/50.2/52.7	43.4/48.0/53.0/60.5
	Max Static Pressure	In. W.G.	0.8	0.8	0.8	0.8	0.8	0.8
	Field Drain Pipe Size O.D.	in (mm)	3/4 (19.1)	3/4 (19.1)	3/4 (19.1)	3/4 (19.1)	3/4 (19.1)	3/4 (19.1)

Manufacturer reserves the right to change, at any time, specifications and designs without notice and without obligations.

APPLICATION DATA

UNIT SELECTION

Select equipment to either match or that can handle slightly less than the anticipated peak load. This provides better humidity control, fewer unit cycles, and less part-load operation.

For units used in spaces with high sensible loads, base equipment selection on unit sensible load, not on a total anticipated load. Adjust for anticipated room wet bulb temperature to avoid undersizing equipment.

UNIT MOUNTING (INDOOR)

Refer to the unit's installation instructions for further details.

Unit leveling - For reliable operation, units should be level in all planes.

Clearance - Provide adequate clearance for airflow (see Fig. 7 — on page 9).

Unit location - Select a location which provides the best air circulation for the space.

Do not install the indoor or outdoor units in a location with special environmental conditions. For those applications, contact your ductless representative.

SUPPORT

Adequate support must be provided to support the weight of all fan coils. Refer to the "DIMENSIONS" on page 7 for fan coil weights and the base unit dimensional drawings.

NOTE: Reference the unit's installation instructions for more information.

DRAIN CONNECTIONS

Install the drains in compliance with the local plumbing codes.

INDOOR UNIT WIRING

Before proceeding with electrical connections, make certain that the supply voltage, frequency, phase, and ampacity are as specified on the unit rating plate. Review the unit wiring label for proper field high and low voltage wiring.

Ensure all electrical connections are in accordance with the NEC and any local codes or ordinances that may apply. Use copper wire **only**.

CAUTION

PROPERTY DAMAGE HAZARD

Failure to follow this caution may result in product or property damage. If a disconnect switch is to be mounted on the unit, select a location where the drill or fastener will not contact electrical or refrigerant components.

WARNING

ELECTRICAL SHOCK HAZARD

Failure to follow this warning could result in personal injury or death. Field wires on the line side of the disconnect found in the fan coil unit remain live, even when the pull-out is removed.

Service and maintenance to incoming wiring cannot be performed until the main disconnect switch (remote to the unit) is turned off.

CAUTION

EQUIPMENT DAMAGE HAZARD

Failure to follow this caution may result in equipment damage or improper operation. Size the wires in accordance with NEC and local codes.

Use the following steps to wire the indoor unit.

NOTE: Wiring in this section is for the base unit ONLY. Auxiliary Electric Heat wiring is covered in the Installation Manual.

1. Prepare the cable for connection.
   a. Using wire strippers, strip the insulation from both ends of the signal cable to reveal about 1/2 in (12mm) of wire.
   b. Strip the insulation from both ends of the wires.
   c. Use a wire crimper to crimp the fork terminals to the ends of the wires.
2. Open the indoor unit's front panel. Use a screwdriver to remove the cover of the electric control box on the indoor unit.
3. Thread the power cable and the signal cable through the wire outlet.
4. Connect the fork terminals to the terminals. Match the wire colors/labels with the labels on the terminal block.
5. Firmly screw the fork terminals of each wire to its corresponding terminal. Refer to the serial number and wiring diagram located on the cover of the electric control box.

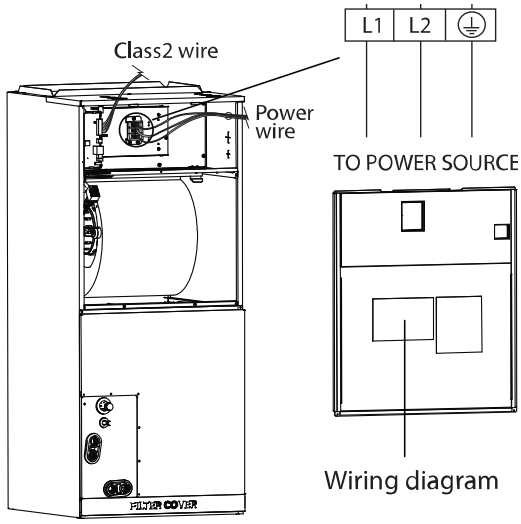

Fig. 8 —Indoor Unit Power Wiring

NOTE: The electric auxiliary heat wiring diagram is supplied with the accessories. Paste the wiring diagram in the designated position after installing the heat modules.

CAUTION

While connecting the wires, strictly follow the wiring diagram.
The refrigerant circuit can become very hot.
Keep the interconnection cable away from the copper tube.

6. Clamp down the cable with the cable clamp. The cable must not be loose or put strain on the fork terminals.
7. Reattach the electric box cover.

WIRING REQUIREMENTS

Size all wires per the NEC (National Electrical Code) or CEC (Canadian Electrical Code) and local codes. Use the electrical data from the outdoor unit (MCA - minimum circuit amps and MOCP - maximum over current protection), to correctly size the wires and the disconnect fuse or breakers respectively.

Communication Wiring: Use 16 to 18 AWG wire with a length up to the system max piping length. It is recommended to use 16 AWG stranded shielded wire for RS 485 communication between the indoor and outdoor units. For retrofitting applications, 18 AWG thermostat wire may be reused provided the wire:

1. Is not coiled, creating a potential EMI field
2. Contains no splices for the wires chosen to be used
3. All unused wires are grounded to the ODU
4. The thermostat wire is in good working condition
5. There are no nearby sources of EMI. Some examples of EMI sources include, but are not limited to transformers, power lines, refrigerators, microwaves, Bluetooth speakers, and Wi-Fi routers and modems.

If communication problems occur with the use of 18 AWG thermostat wire it will be required to replace the wire with 16 AWG stranded shielded wire.

⚠ WARNING

Refer to the wiring template for the wiring method.
DO NOT connect the power cord to the communication line as this may damage the system.

⚠ CAUTION

EQUIPMENT DAMAGE HAZARD
Be sure to comply with local codes.

Every wire must be connected firmly. Loose wiring may cause the terminal to overheat or result in a unit malfunction. A fire hazard may also exist. Ensure all wiring is tightly connected.

No wire should touch the refrigerant tubing, compressor or any moving parts.

Disconnecting means should be provided and located within sight and readily accessible from the system. Consult local electrical codes. Route the connecting cable with conduit through the hole in the conduit panel.

CONTROL SYSTEM

The indoor unit is equipped with a microprocessor control to perform two functions:

1. Provide safety for the system
2. Control the system and provide optimum levels of comfort and efficiency.

The main microprocessor is located on the control board of the fan coil unit (outdoor units have a microprocessor also) with thermistors located in the fan coil air inlet and on the indoor coil. Heat pump units have a thermistor on the outdoor coil. These thermistors monitor the system's operation to keep the unit within acceptable parameters and control the operating mode.

WIRED REMOTE CONTROLLERS

KSACN1401AAA Wired Remote Controller

A220918

Fig. 9 — KSACN1401AAA Wired Remote Controller

Wired remote controller KSACN1401AAA is sold separately.

NOTE: The wired controller and 24 volt thermostat CANNOT be used simultaneously.

KSACN1701BAA Wired Smart Controller

Wired smart controller KSACN1701BAA is sold separately.

Fig. 10 —KSACN1701BAA Wired Smart Controller

SPECIFIC WIRING METHODS

WARNING

Refer to the wiring nameplate for the wiring method. Do not connect 24V AC to S1 - S2, as this will damage the system.

SCENARIO 1:

This allows a 24 volt thermostat to be used with RS485 communication between the indoor and outdoor units.

- The **B** terminal and **W** terminal should not be used together.
- **W** should only be used with a conventional thermostat for the heat demand.
- DS is a reserve Terminal.

NOTE: None of the outdoor 24 volt terminals are to be used for Scenario 1.

To use a 24V thermostat, refer to the Figure 11.

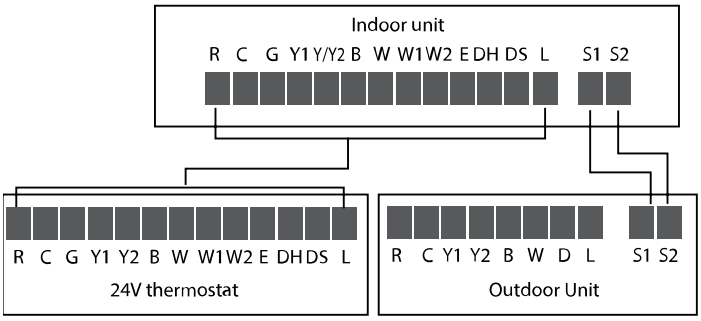

Fig. 11 — Scenario 1

SCENARIO 2 (DEFAULT):

This allows the 1401 or 1701 wired controllers to be used with RS485 communication between indoor and outdoor units.

- None of the 24 volt terminals for the indoor or outdoor unit are to be used for Scenario 2"
- Connect the **Ha/Hb** terminals on the wired controller to the **Ha/Hb** terminals on the indoor built-in 24V interface (CN7) with 16 AWG shielded/stranded wire.

Refer to the wiring method of indoor and outdoor unit communication and wired controller (see Figure 12).

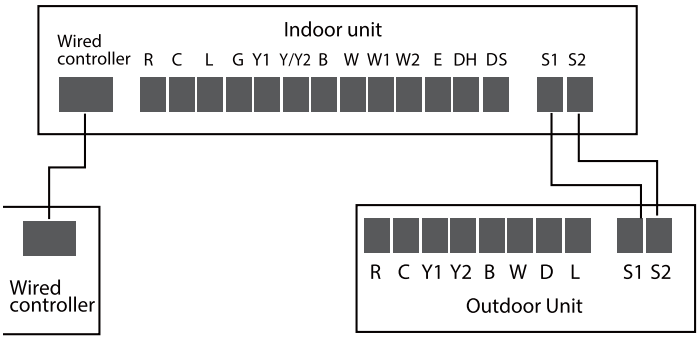

Fig. 12 — Scenario 2 (Default)

24 volt communication between indoor and outdoor units is prohibited due to compliance restrictions.

BUILT IN 24 VOLT INTERFACE

The indoor unit comes equipped with a 24V interface that provides further flexibility, functionality and control allowing it to be controlled by any 3rd party heat pump thermostat (field supplied).

NOTE: A heat pump thermostat is required. A 2 heat/1 cool thermostat is required for electric heat applications.

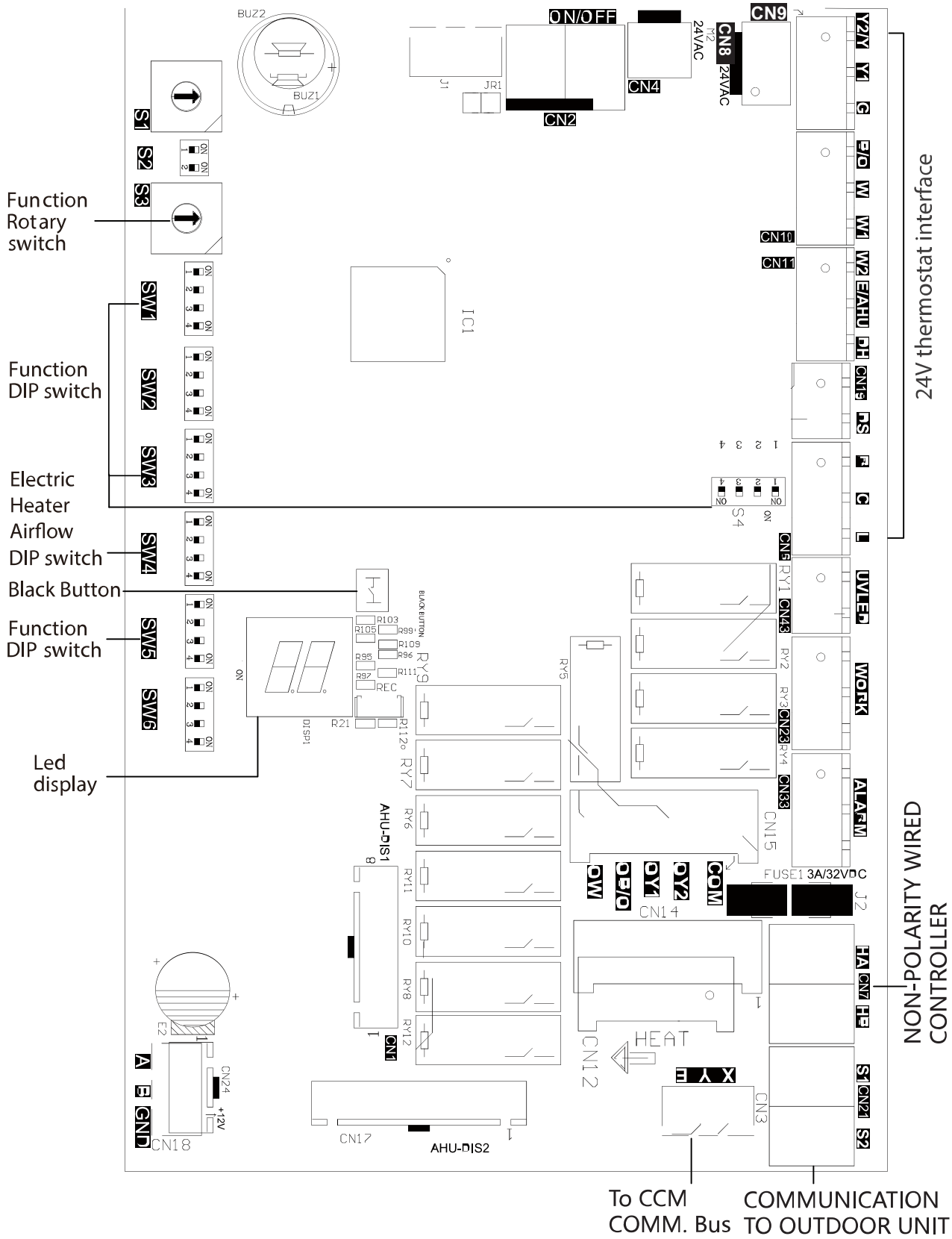

A260126

Fig. 13 – 24 Volt Interface

DIP SWITCH DEFINITIONS

Function DIP switch settings:

The 24V thermostat mode needs to refer to the following settings:

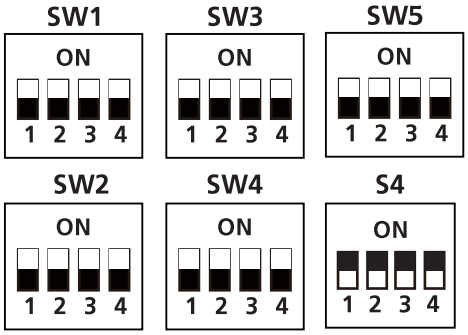

SW4-1	000 is the default 000/001/010/011/100/101/110/111, internal machines with different abilities, electric heating and PSC classification for use.
SW4-2	
SW4-3	

Function combination table of SW1-1 and SW1-4:

SW1	Control type	IDU and ODU Connection	Note
ON 1 2 3 4	Wired controller / 24V thermostat	(S1+S2) / 24V connection	Auto Discovery
ON 1 2 3 4	Wired controller	S1+S2	Scenario 2
ON 1 2 3 4	24V Thermostat	S1+S2	Scenario 1 (no outdoor unit clean function[*])

[*]: Outdoor unit clean function means reversing outdoor fan to blow away dust and other attachments on the fins

24 volt communication between indoor and outdoor units is prohibited per compliance restrictions.

NOTE: Refer to the Installation Manual for setting airflow or electric heat.

Indoor Unit Dial Code

Table 6 — Indoor Unit Dial Code

NO.	DIAL CODE	CONTROL SCENARIO	FUNCTION	ON	OFF	NOTE
1	SW1-2	1,2	Anti-cold blow protection option	NO	[Default] YES	
2	SW1-3	1,2	Single cooling / heating and cooling options	Cooling	[Default] Cooling & Heating	
3	SW2-1	1	Compressor Running (demand working with heat pump+ Electric heat)	Compressor slower speed	[Default] Faster Compressor	Only affects compressor and W1
4	SW2-1	2	Temperature differential to activate first stage auxiliary heat (the GAP of T1 and Ts), Wire controller demand with heat pump + Electric heat working together	2°F (1°C)	[Default]	
5	SW2-2	2	Electric heat on delay	YES	[Default] NO	
6	SW2-3	2	Electric auxiliary heating delay to start time	30 minutes	[Default] 15 minutes	Based on SW2-2 is ON
7	SW2-4	1	Compressor	The operation of heat pump is limited by the outdoor temperature, and the operation of auxiliary heat is not limited.The system makes judgments according to the following rules: 1) The compressor can be operated when the outdoor temperature is ⩾ S3 DIP switch temperature +2 °C. 2) The compressor cannot be operated when the outdoor temperature is lower than the S3 DIP switch temperature.	[Default] The operation of heat pump is limited by the outdoor temperature, and the operation of auxiliary heat is not limited. The system makes judgments based on the following rules: 1) The compressor cannot be operated when the outdoor temperature is lower than the S3 DIP switch. 2) The compressor can be operated when the outdoor temperature is ⩾S3 DIP switch temperature +2 °C.	SW2-4 and S3 need to working together
8	SW2-4	2	Compressor/Auxiliary heat outdoor ambient lockout	The operation of heat pump is limited by the outdoor temperature, and the operation of auxiliary heat is not limited.The system makes judgments according to the following rules: 1) The compressor can be operated when the outdoor temperature is ≥S3 DIP switch temperature +2 °C. 2) The compressor cannot be operated when the outdoor temperature is lower than the S3 DIP switch temperature.	[Default] Only one heat pump or auxiliary heat can be operated.The system makes judgments according to the following rules: 1) When the outdoor temperature is lower than the S3 DIP switch temperature, the compressor is not allowed to operated, but auxiliary heat is allowed to operated; 2) When the outdoor temperature is ≥S3 DIP switch temperature +2(°C), the compressor can be operated, but auxiliary heat cannot be operated.	
9	Rotary Switch S3	1,2	Set outdoor temperature Limitation (for auxiliary heating or compressor)	Table A		
10	SW3-1	1	Maximum continuous runtime allowed before system automatically stages up capacity to satisfy set point. This adds 1 to 5°F to the user set point in the calculated control point to increase capacity and satisfy user set point	30 minutes	[Default] 90 minutes	

NO.	DIAL CODE	CONTROL SCENARIO	FUNCTION	ON	OFF	NOTE
11	SW3-2	1	Cooling and heating Y/Y2 temperature differential adjustment.	Compressor slower speed	[Default] Faster Compressor	Only affects compressor
12	SW3-3	1	Compressor Running (demand working with heat pump+ Electric heat)	Compressor slower speed	[Default] Faster Compressor	Only affects compressor and W2
13	SW3-3	2	Temperature differential to activate second stage auxiliary heating (the GAP of T1 and Ts) Wire controller demand with heat pump + Electric heat working together	4°F(2°C)	[Default] 6°F (3°C)	
14	SW3-4	1	Fan speed of cooling mode when 24V Thermostat is applied for.	Turbo	High	
15	SW4-1 SW4-2 SW4-3	1,2	Electric heat nominal CFM adjustment	Available settings are 000/001/010/011. Each digit corresponds an individual switch position. For example [SW4-1 OFF, SW4-2 ON, SW4 -3 OFF] = 010		
16	SW4-4	2	Temperature differential to activate third stage auxiliary heating (the GAP of T1 and Ts) Wire controller demand with heat pump+ Electric heat working together	6°F(3°C)	[Default] 8°F (4°C)	Only valid for product which has three stage auxiliary heating.
17	S4-4	1	Default ON	[Default] For single stage supplemental heat,W1 and W2 are connected	For dual stage supplemental heat, W1 and W2 are controlled independently.	
18	S4-2	1	DH function selection	[Default] Dehumidification control not available	Dehumidification feature is enabled through thermostat	
19	SW5-3	1,2	L or Alarm relay selection	L output 24V or alarm relay close only when refrigerant sensor fault or R454B refrigerant leakage be detected	[Default] L output 24V or alarm relay close when any fault be detected	
20	SW5-4	1	R output selection	R stops output 24V when R454B refrigerant leakage is detected	[default] R keeps output 24V even when R454B refrigerant leakage is detected	

Table 7 — Control Scenario

Control Scenario	24V, Tstat, S1+S2	1
	Wired Controller S1+S2	2

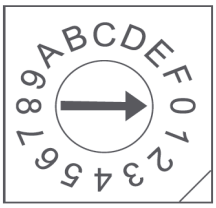

Fig. 14 — Dip Switch

Address DIP Switch:

Address dialing S1+SW8: When the user uses the centralized controller, the address dialing is required.

Network address: The address silkscreen is NET address, which is composed of a 16-bit address rotary code S1 plus a two-digit DIP switch SW8 [Set during engineering installation, no network function does not need to be set].

When SW8 is 00 (the dialing code is not connected), the network address value is the value of S1;

When SW8 is 10 (corresponding to the switch of the hardware connected to the 10K resistor), the network address value is S1 plus 16;

Determined by dial code SW8 1-10K 2-5.1K

When SW8 is 01 (corresponding to the dial code of the 5.1K resistor connected to the hardware is turned on), the network address value is the value of S1 plus 32;

When SW8 is 11 (all dialing codes are on), the network address value is the value of S1 plus 48.

Table 8 — Table A for use with dip switch 2-4

S3	S3 (°F)	S3 (°C)
0	OFF	OFF
1	-22	-30
2	-18	-28
3	-15	-26
4	-11	-24
5	-8	-22
6	-4	-20
7	3	-16
8	10	-12
9	18	-8
A	25	-4
B	32	0
C	36	2
D	39	4
E	43	6
F	46	8

Note: For Scenario 1 & Scenario 2, when the IDU paired with a single split outdoor unit, after power-on or recovery from IDU and ODU communication failure, the compressor in heating mode delays starting for 3 minutes.

Table 9 — Determined by dial code SW8 1-10K 2-5.1K

Dial Code Selection	NET Address
ON 1 2	S1 + 48
ON 1 2	S1 + 32
ON 1 2	S1 + 16
ON 1 2	S1

Outdoor Unit Dip Switch Setting

Press the SW4 button 10 seconds for force defrosting.

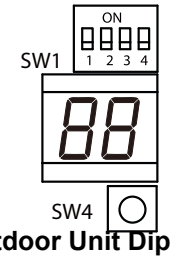

Fig. 15 — Outdoor Unit Dip Switch Setting

Table 10 — Outdoor Unit Dip Switch Setting

No.	Dial Code	Features	On	Off
1	SW1-1	Function to be defined		
2	SW1-2	Communication dial code	Not available- 24 volt communication is prohibited for use	24V communication/ 485 communication
3	SW1-3	Strong cold and strong heat function	Not available- 24 volt communication is prohibited for use	The cooling/heating target pressure compensation value is invalid
4	SW1-4	Enhanced defrosting function	Enhanced defrosting	Default setting (standard defrost algorithm)
[*]: Outdoor unit clean function means reversing outdoor fan to blow away dust and other attachments on the fins.				

AIR FLOW DATA

Table 11 — Air Flow Data

SYSTEM SIZE		18K	24K	30K	36K	48K	60K
Airflow** (CFM)	Turbo	618	824	989	1,189	1,601	1,807
	High	577	759	895	1,083	1,472	1,583
	Medium	530	695	806	971	1,283	1,360
	Low	489	630	712	865	1,095	1,136

Airflow values obtained at AHRI 210/240 rating conditions.
**Measured at rates static pressure:

18K-24K: 0.1 in. WG (25pa)
30K-36K: 0.15 in. WG (37pa)
48K-60K: 0.2 in. WG (50pa)

SOUND PRESSURE

Table 12 — Sound Pressure

AIR HANDLER		18K	24K	30K	36K	48K	60K
Indoor Sound Pressure	dB(A) at (Turbo/ High / Med / Low / Silent)	N\A 41 39 33 N\A	N\A 44 42 28 N\A	47.0 46.0 43.0 27.5 N\A	49 48.0 45.5 25.5 N\A	N\A 52 50 34 N\A	54.5 52 49.5 34.5 N\A

SOUND PRESSURE IN OCTAVE BANDS

18K

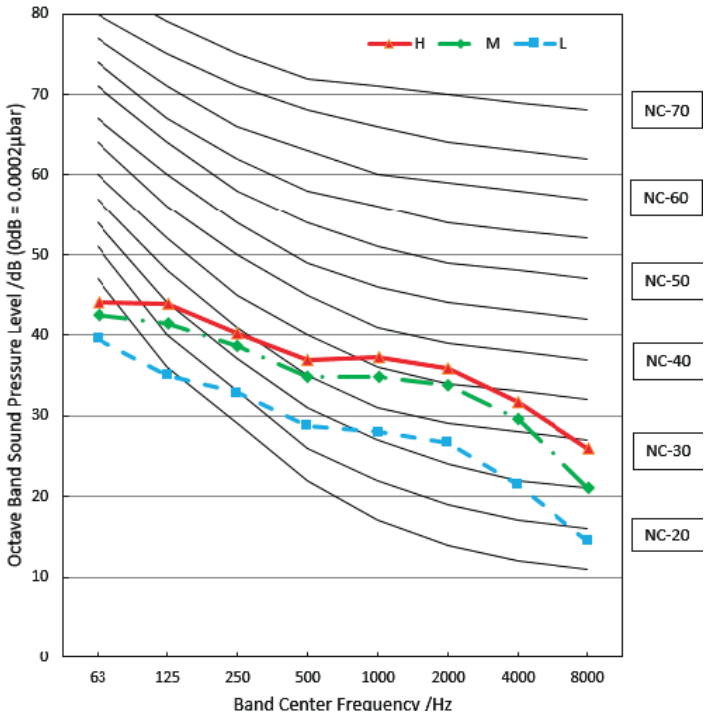

A260128

24K

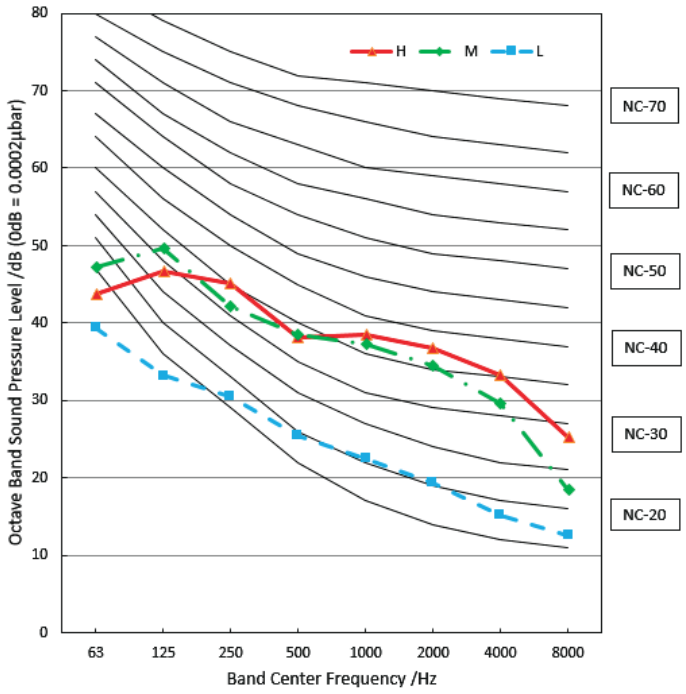

A260129

SOUND PRESSURE IN OCTAVE BANDS (Con't)

30K

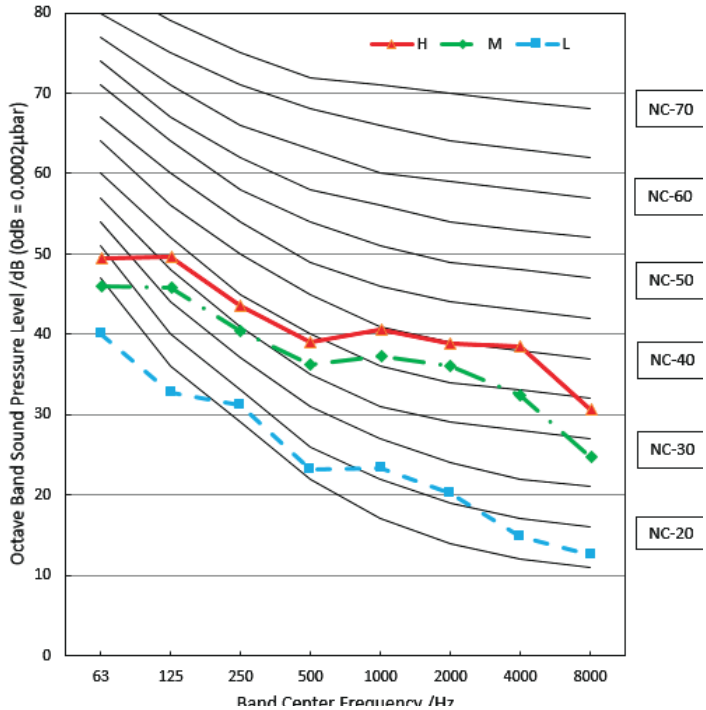

A260131

48K

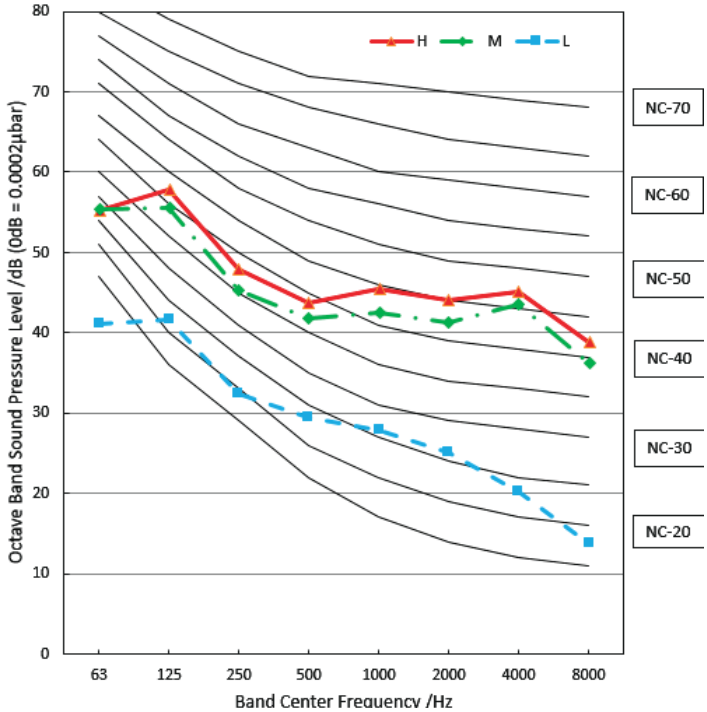

A260133

36K

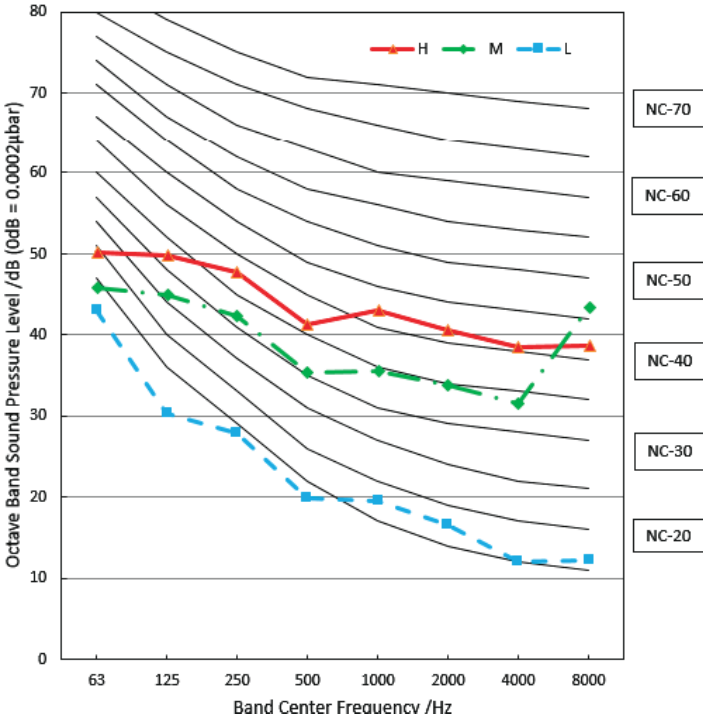

A260132

60K

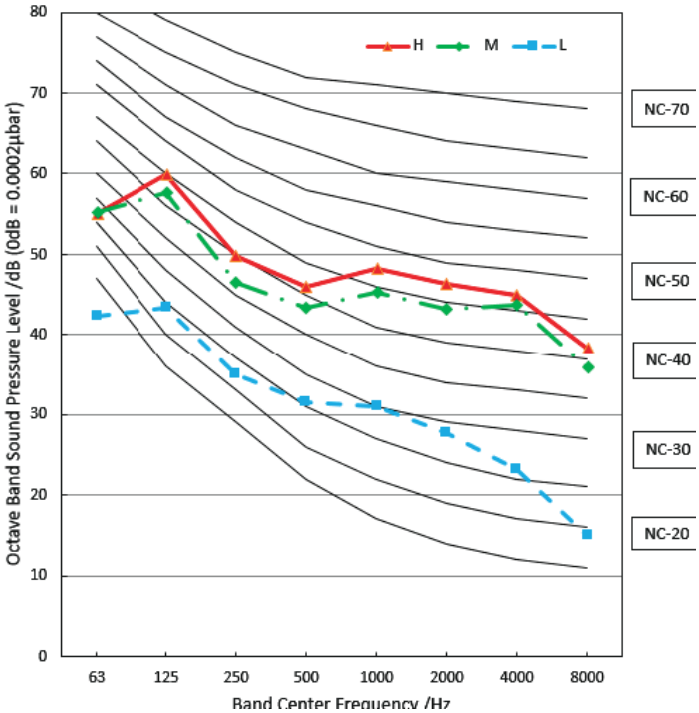

A260134

SOUND PRESSURE TESTING METHOD

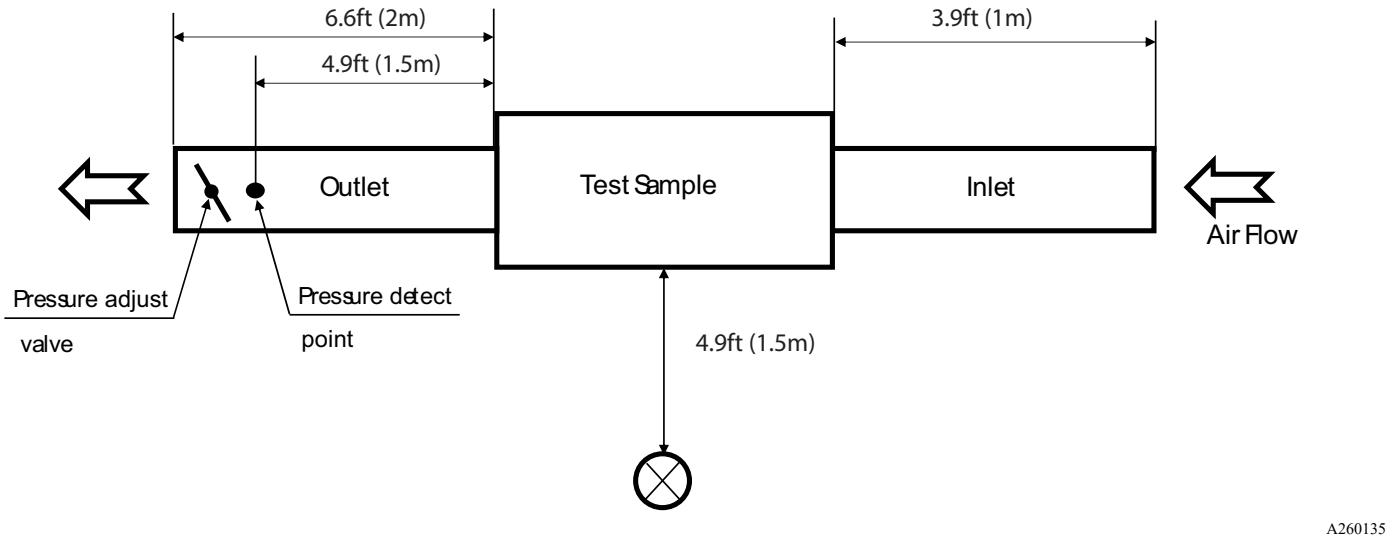

Fig. 16 — Sound Pressure Testing Method

FAN AND MOTOR SPECIFICATIONS

Table 13 — Fan and Motor Specifications

Size			18K	24K	30K	36K	48K	60K
Indoor Model Number			D5FUAAH18XAK	D5FUAAH24XAK	D5FUAAH30XAK	D5FUAAH36XAK	D5FUAAH48XAK	D5FUAAH60XAK
Power supply		V;Ph;Hz	115/208/230V; 1Ph; 60HZ	115/208/230V; 1Ph; 60HZ	115/208/230V; 1Ph; 60HZ	115/208/230V; 1Ph; 60HZ	115/208/230V; 1Ph; 60HZ	115/208/230V; 1Ph; 60HZ
INDOOR FAN SPECIFICATIONS	Material	-	Galvanized sheet	Galvanized sheet	Galvanized sheet	Galvanized sheet	Galvanized sheet	Galvanized sheet
	Type	-	LX-270*207*12.7-51J-A	LX-270*207* 12.7-51J-A	LX-282*245*12.7 -49J-B	LX-282*245* 12.7-49J-B	LX-279*271*12.7-51J-C	LX-279*271*12.7-51J-C
	Diameter	inch	10.6	10.6	11.1	11.1	11.0	11.0
		mm	270	270	282	282	279	279
	Height	inch	8.1	8.1	9.6	9.6	10.7	10.7
		mm	207	207	245	245	271	271
INDOOR MOTOR SPECIFICATIONS	Model	-	ZKFD-250-10-4	ZKFD-250-10-4	ZKFD-375-10-4	ZKFD-375-10-4	ZKFD-750-10-4	ZKFD-750-10-4
	Type	-	DC	DC	DC	DC	DC	DC
	Input (0.5 in.w.g.)	W	183.3	183.3	280.3	280.3	448.5	448.5
	Max. input (0.8 in.w.g.)	W	246.5	246.5	359.4	359.4	557.8	557.8
	Output (0.5 in.w.g.)	W	147	147	224	224	359	359
	FLA	A	3	3	4.5	4.5	8.3	8.3
	Rated HP	HP	1/3	1/3	1/2	1/2	1.00	1.00
	Range of current	Amps	0.49~2.03	0.49~2.03	0.74~2.53	0.74~2.53	0.99~3.73	0.99~3.73
	Rated current	Amps	1.37	1.37	2.03	2.03	3.05	3.05
	Speed	rev/min	550/510/450	550/510/450	685/620/560	685/620/560	820/720/615	820/720/615
	Rated RPM	rev/min	550	550	685	685	820	820
	Insulation class	-	B	B	B	B	B	B
	Safe class	-	IPX0	IPX0	IPX0	IPX0	IPX0	IPX0

Manufacturer reserves the right to change, at any time, specifications and designs without notice and without obligations.

WIRING DIAGRAMS

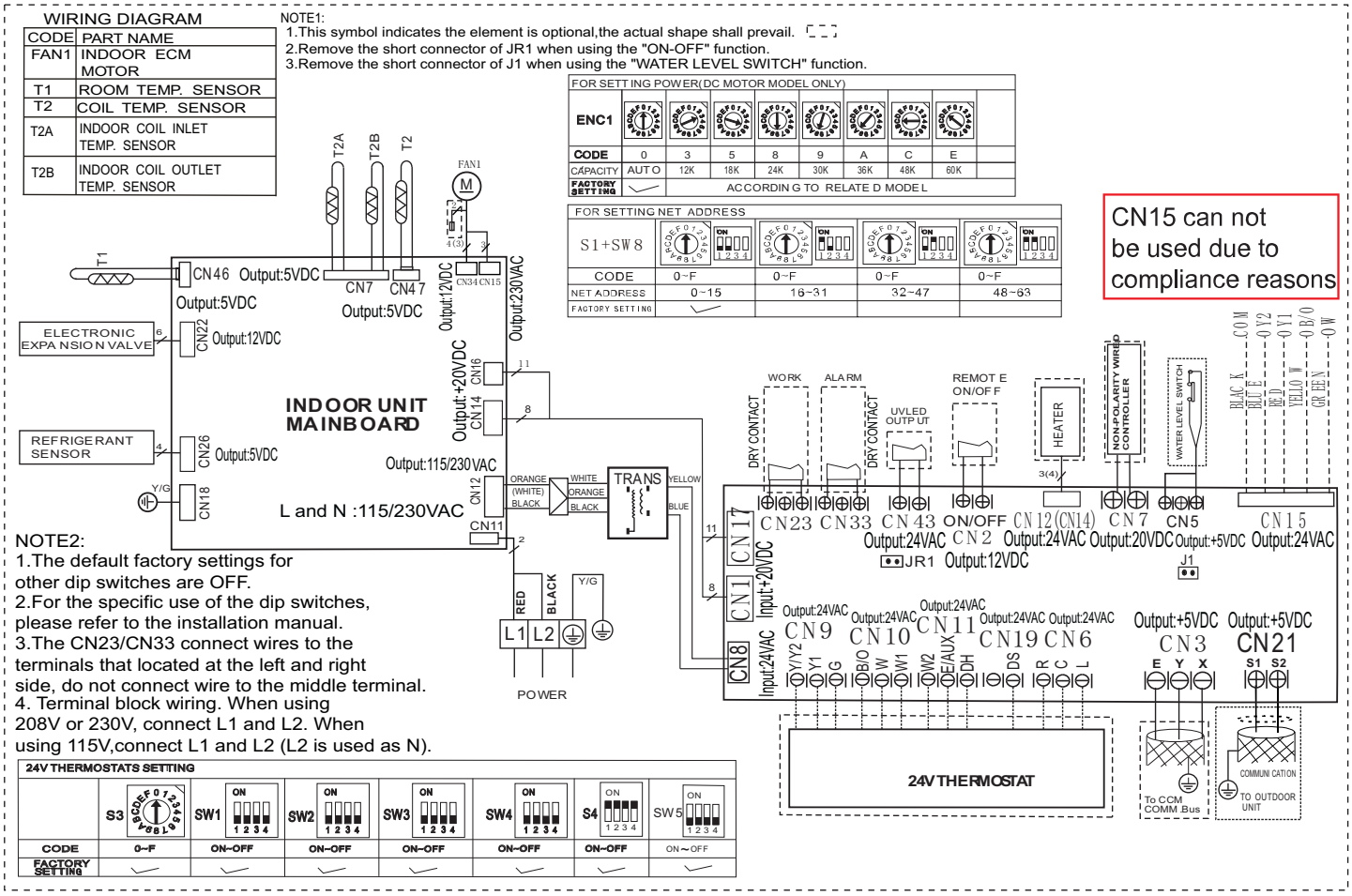

A220919

Fig. 17 — Wiring Diagram Sizes 18K, 24K

NOTE: The 24v connections at CN15 are prohibited from use.

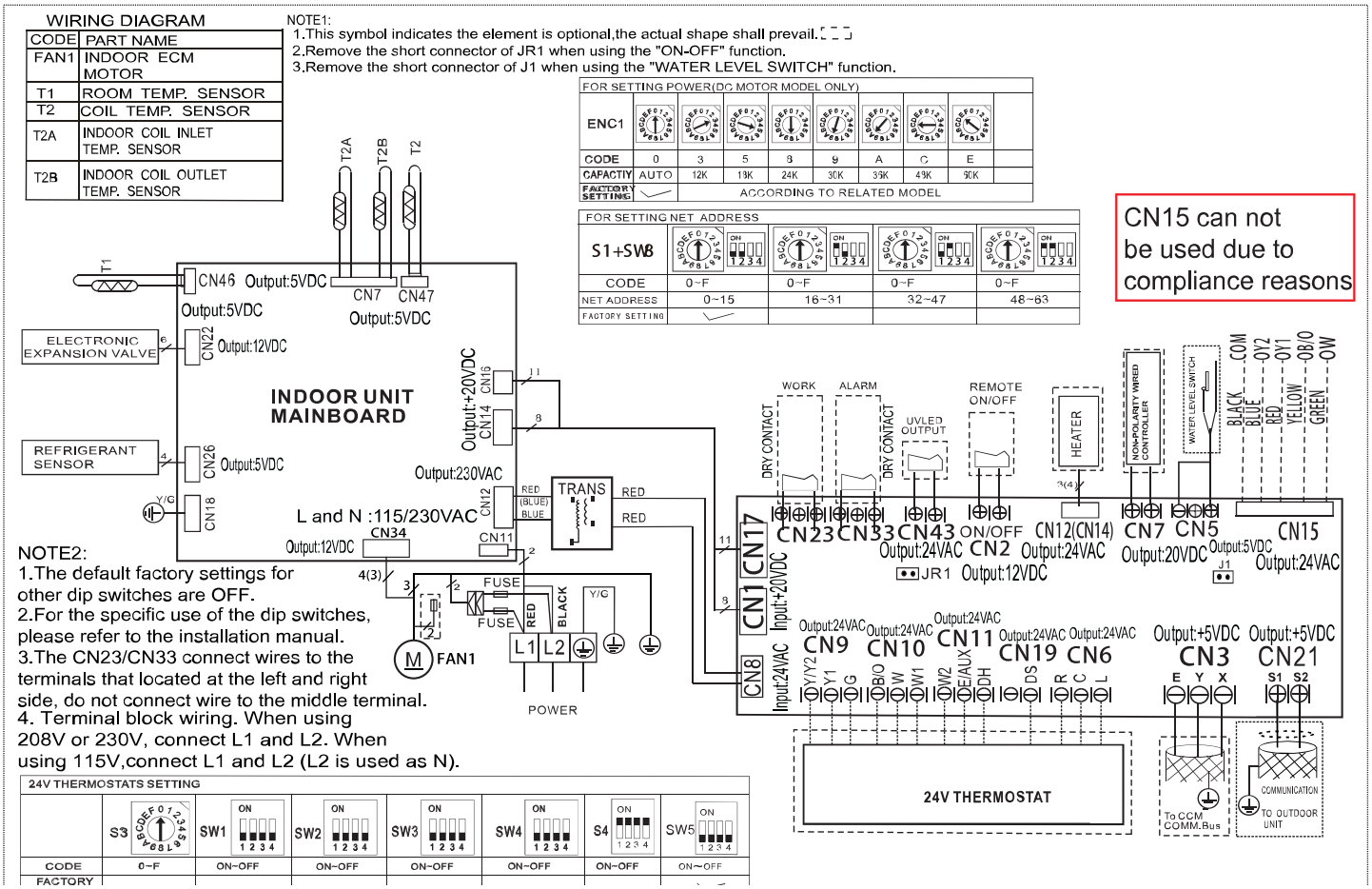

A260136

Fig. 18 —Wiring Diagram Sizes 30K, 36K, 48K, 60K

NOTE: The 24v connections at CN15 are prohibited from use.

Main PCB and 24V Board Terminal Definitions

Table 14 – Main PCB Terminal Definitions

Main PCB	
TERMINAL	**FUNCTION DEFINITION**
CN11	Input voltage 115/208/230VAC, internal power input terminal
CN34	Output voltage 12V, communication port with fan
CN18	Main board grounding
CN26	Output voltage 5V, RDS port
CN22	Output voltage 12V, electronic expansion valve port
CN46	Output voltage 5V, T1 temperature sensor port
CN7	Output voltage 5V, T2A and T2B pipe temperature sensor port
CN47	Output voltage 5V, T2 tube temperature sensor port
CN16/CN14	Output voltage 20V, communication port with 24V board
CN12	Output voltage 115/208/230V, 24V transformer input

Table 15 – 24V Board Terminal Definitions

24V Board	
TERMINAL	**FUNCTION DEFINITION**
CN8	Output voltage 24VAC, 24V power supply
CN1/CN17	Input voltage 20V, communication port with main board
CN23	Passive, dry contact
CN33	Passive, dry contact
CN43	Output voltage 24VAC, UV control signal
CN5	Output voltage 5V, water level switch short circuit
CN2	Output voltage 12V, remote ON/OFF switch
CN12 (CN14)	Output voltage 24VAC, auxiliary heating control signal
CN27	Output voltage 20V, two-core wire controller power supply communication port
CN15	Output voltage 24VAC, 24V non-communication control external machine port **NOTE: The 24v connections at CN15 are prohibited from use.**
CN21	Output voltage 5V, with outdoor 485 communication port
CN3	Output voltage 5V, with central controller 485 communication port
CN6	Output voltage 24VAC, thermostat signal input port
CN19	Output voltage 24VAC, thermostat signal input port
CN11	Output voltage 24VAC, thermostat signal input port
CN10	Output voltage 24VAC, thermostat signal input port
CN9	Output voltage 24VAC, thermostat signal input port

NOTE: The 24v connections at CN15 are prohibited from use.

TROUBLESHOOTING

Table 16 — Error Codes

DISPLAY	MALFUNCTION AND PROTECTION INDICATION
EC07	ODU fan speed out of control
EC0d	ODU malfunction
EC51	ODU EEPROM parameter error
EC52	ODU coil temp sensor error
EC53	ODU ambient temp sensor error
EC54	COMP. discharge temp sensor error
EC56	IDU coil outlet temp sensor error
ECC1	Other IDU refrigerant sensor detects leakage (multi-zone)
EH00	IDU EEPROM malfunction
EH03	IDU fan speed out of control
EH0A	IDU EEPROM parameter error
EH0b	IDU main control and display boards communication error
EH0E	Water-level alarm malfunction
EH3A	External fan DC bus voltage is too low protection
EH3b	External fan DC bus voltage is too high fault
EH60	IDU room temp. sensor (T1) error
EH61	IDU coil temp. sensor (T2) error
EH62/EH66	Evaporator coil inlet temp. sensor (T2B) is in open circuit or short circuit
EH65	Evaporator coil inlet temp. sensor (T2A) is in open circuit or short circuit
EHbA	Communication error between indoor unit and external fan module
EHb3	Communication malfunction between wired controller and indoor unit
EHC1	Refrigerant sensor detects leakage
EHC2	Refrigerant sensor is out of range and leakage is detected
EHC3	Refrigerant sensor is out of range
EL01	IDU & ODU communication error
EL0C	System lacks refrigerant
EL16	Communication malfunction between adapter board and outdoor main board
FHCC	Refrigerant sensor error
FL09	Mismatch between the new and old platforms
PC00	ODU IPM module protection
PC01	ODU voltage protection
PC02	Compressor top (or IPM) temp. protection
PC03	Pressure protection (low or high pressure)
PC04	Inverter compressor drive error
PC0L	Low ambient temp. protection
----	IDUs mode conflict
NOTE: The digital tube will show DF in defrost mode and FC in forced cooling mode. DF and FC are not error codes.	

Table 17 — Refrigerant Leak Detection Error Codes

EHC1	Refrigerant Sensor detects a leak
EHC2	Working condition of the refrigerant sensor is out of range and a leak is detected

If **you receive one of the codes in Table 17, call a technician as soon as possible. No need to panic, the unit goes into TURBO mode until the error code clears. There is a "beeping" noise coming from the indoor unit, which is normal in this case.**

For additional diagnostic information, refer to the Service Manual.

GUIDE SPECIFICATIONS
INDOOR AIR HANDLER SYSTEMS

Size Range: 1.5 to 5 Ton Nominal Cooling and Heating Capacity
Model Number: **D5FUAA**

Part 1 - GENERAL

1.01 System Description

Indoor, air handler, direct-expansion fan coils are matched with a heat pump outdoor unit.

1.02 Agency Listings

Unit is rated per AHRI Standards 210/240 and listed in the AHRI directory as a matched system.

1.03 Delivery, Storage, And Handling

Units are stored and handled per the unit manufacturer's recommendations.

1.04 Warranty (For Inclusion By Specifying Engineer)

Part 2 - PRODUCTS

2.01 Equipment

A. General:

Indoor, direct-expansion fan coil. The unit is complete with cooling/heating coil, fan, fan motor, piping connectors, electrical controls, microprocessor control system, and integral temperature sensing.

B. Unit Cabinet:

Unit cabinet is constructed of galvanized steel. The cabinet is fully insulated for improved thermal and acoustic performance.

C. Fans:

The fan is the tangential direct-drive blower type with air intake at the rear or bottom of the unit and discharge at the top.

D. Coil:

The coil is a copper tube with aluminum fins and galvanized steel tube sheets. The fins are bonded to the tubes by mechanical expansion and specially hydrophilic pre-coated for enhanced wet-ability. A drip pan under the coil has a drain connection for piping attachment to remove condensate.

E. Motors:

The motors have an open drip-proof, permanently lubricated ball bearing with inherent overload protection. Fan motors are 4-speed.

F. Controls:

The controls consist of a microprocessor-based control system which controls the space temperature, determines optimum fan speed, and runs self diagnostics.

The unit has the following functions (at a minimum):

1. An automatic restart, after a power failure, which sets the unit back to the same operating conditions it operated under at time of failure.
2. A timer function to provide a minimum 24−hour timer cycle for system Auto Start/Stop.
3. Automatic airflow technology - fan maintains set CFM range at up to 0.80" W.C. ESP
4. Temperature−sensing controls sense return air temperature.
5. Indoor coil freeze protection.
6. Wired remote controller to enter set points and operating conditions.
7. **DEHUMIDIFICATION** mode provides increased latent removal capability by modulating system operation and set point temperature. Applicable **only** with third party thermostats that have the dehumidification option.
8. **FAN−ONLY** operation to provide room air circulation when cooling is not required.
9. Diagnostics provide continuous checks of unit operation and warns of possible malfunctions. Error messages appear on the unit.
10. The fan speed control is user−selectable: high, medium, low, or microprocessor controlled automatic operation during all operating modes.
11. Automatic heating−to−cooling changeover in the **HEAT** pump mode. The control includes deadband to prevent rapid mode cycling between heating and cooling.
12. Indoor coil high temperature protection is provided to detect an excessive indoor discharge temperature when the unit is in the **HEAT** pump mode.

G. Electrical Requirements:

The indoor fan motor operates on 208-230V, or 115V.

H. Operating Characteristics:

The air handler system has a minimum SEER2 (Seasonal Energy Efficiency Ratio) and HSPF2 at AHRI conditions, as listed on the specifications table.

I. Refrigerant Lines:

All units have refrigerant lines that can be oriented to connect from the side of the unit.

NOTES:

© 2026 Carrier. All rights reserved.

Manufacturer reserves the right to change, at any time, specifications and designs without notice and without obligations.