38MHRCQ
Outdoor Unit Single Zone Ductless System
Sizes 09 to 36

Installation Instructions

Fig. 1 — Outdoor Unit

NOTES:

Read the entire instruction manual before starting the installation.

Images are for illustration purposes only. Actual models may differ slightly.

TABLE OF CONTENTS

SAFETY CONSIDERATIONS....2
PARTS LIST....3
SYSTEM REQUIREMENTS....4
PIPING REQUIREMENTS....4
WIRING....5
DIMENSIONS....6
CLEARANCES....12
INSTALLATION GUIDE....13
OUTDOOR UNIT INSTALLATION....13
Step 1 - Select Installation Location....13
Step 2 - Install Drain Joint (Heat Pump Unit Only)....13
Step 3 - Anchor the Outdoor Unit....14
Step 4 - Connect the Signal and Power Cables....14
Step 5 - Refrigerant Piping....15
Step 6 - Evacuate Coil and Tubing System....17
WIRING....18
Step 7 - Electrical And Gas Leak Checks....18
ELECTRICAL DATA....21
CONNECTION DIAGRAMS....22
SYSTEM VACUUM AND CHARGE....23
START-UP....24
OUTDOOR UNIT DIAGNOSTIC GUIDES....24
DUCTLESS START-UP CHECKLIST - SINGLE ZONE....25

SAFETY CONSIDERATIONS

Installing, starting up, and servicing air-conditioning equipment can be hazardous due to system pressures, electrical components, and equipment location (roofs, elevated structures, etc.).

Only trained, qualified installers and service mechanics should install, start-up, and service this equipment.

Untrained personnel can perform basic maintenance functions such as coil cleaning. All other operations should be performed by trained service personnel only.

When working on the equipment, observe precautions in the literature and on tags, stickers, and labels attached to the equipment.

Follow all safety codes. Wear safety glasses and work gloves. Keep a quenching cloth and fire extinguisher nearby when brazing. Use care in handling, rigging, and setting bulky equipment.

Read these instructions thoroughly and follow all warnings or cautions included in the literature and attached to the unit. Consult the local building codes and current editions of the National Electrical Code (NEC) NFPA 70. In Canada, refer to current editions of the Canadian electrical code CSA 22.1.

Recognize safety information. This is the safety-alert symbol ⚠. When you see this symbol on the unit and in instructions or manuals, be alert to the potential for personal injury. Understand these signal words: **DANGER**, **WARNING**, and **CAUTION**. These words are used with the safety-alert symbol. **DANGER** identifies the most serious hazards which will result in severe personal injury or death. **WARNING** signifies hazards which could result in personal injury or death. **CAUTION** is used to identify unsafe practices which may result in minor personal injury or product and property damage. **NOTE** is used to highlight suggestions which will result in enhanced installation, reliability, or operation.

⚠ WARNING

ELECTRICAL SHOCK HAZARD

Failure to follow this warning could result in personal injury or death.

Before installing, modifying, or servicing system, main electrical disconnect switch must be in the **OFF** position. There may be more than 1 disconnect switch. Lock out and tag switch with a suitable warning label.

⚠ WARNING

EXPLOSION HAZARD

Failure to follow this warning could result in death, serious personal injury, and/or property damage.

Never use air or gases containing oxygen for leak testing or operating refrigerant compressors. Pressurized mixtures of air or gases containing oxygen can lead to an explosion.

⚠ CAUTION

EQUIPMENT DAMAGE HAZARD

Failure to follow this caution may result in equipment damage or improper operation.

Do not bury more than 36 in. (914 mm) of refrigerant pipe in the ground. If any section of pipe is buried, there must be a 6 in. (152 mm) vertical rise to the valve connections on the outdoor units. If more than the recommended length is buried, refrigerant may migrate to the cooler buried section during extended periods of system shutdown. This causes refrigerant slugging and could possibly damage the compressor at start-up.

Manufacturer reserves the right to change, at any time, specifications and designs without notice and without obligations.

PARTS LIST

Table 1 — Parts List

Part No.	Part Name	Qty
1	Outdoor Unit	1
-	Literature package including installation instructions and warranty	1
-	Vibration pad	4
-	Drain joint	1
-	Drain hose	1

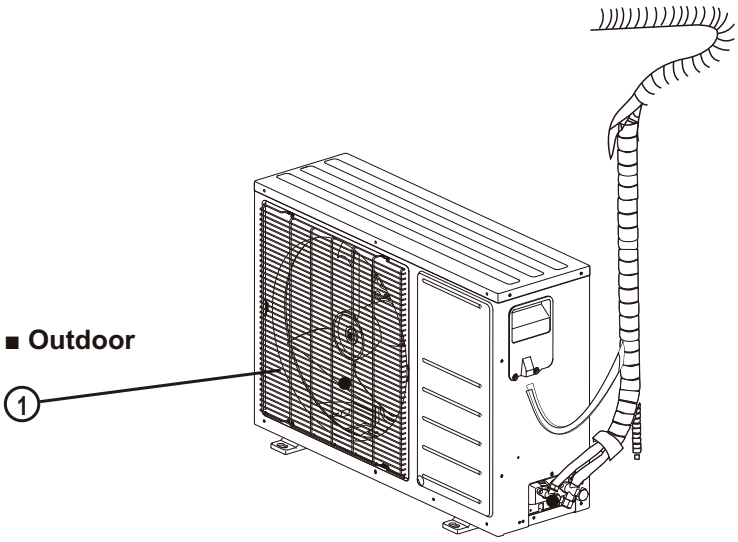

Fig. 2 — Outdoor Unit

NOTES:

- **If the outdoor unit is higher than the indoor unit, prevent rain from flowing into the indoor unit along the connection pipe by making a downward arc in the connection pipe before it enters the wall to the indoor unit. This ensures that rain drips from the connection pipe before it enters the wall.**
- **Piping and the interconnecting wiring are field supplied.**
- **Figure 2 is only a sketch. Different models may differ slightly.**

The units listed in Table 2 are covered in this manual.

Table 2 — Unit Sizes

	System Tons	BTUh	V-Ph-Hz	Model
Heat Pump	0.75	9,000	115-1	38MHRCQ09AA1
	1.00	12,000		38MHRCQ12AA1
	1.75	9,000	208/230-1-60	38MHRCQ09AA3
	1.00	12,000		38MHRCQ12AA3
	1.50	18,000		38MHRCQ18AA3
Cooling Only	2.00	24,000		38MHRCQ24AA3
	2.50	30,000		38MHRCQ30AA3
	3	36,000		38MHRCQ36AA3

Manufacturer reserves the right to change, at any time, specifications and designs without notice and without obligations.

SYSTEM REQUIREMENTS

Allow sufficient space for airflow and unit service. See Fig. 8 — on page 12 for the minimum required distances between the unit and walls or ceilings.

PIPING REQUIREMENTS

IMPORTANT: Both refrigerant lines must be insulated separately.

The minimum refrigerant line length between the indoor and outdoor units is 10 ft. (3 m). The following lengths are allowed. Table 3 lists the pipe sizes for the outdoor unit. For the indoor unit pipe sizes refer to the indoor unit installation instructions.

Table 3 — Heat Pump System

SYSTEM SIZE			9K (115 V)	12K (115 V)	9K (208/230 V)	12K (208/230 V)	18K (208/230 V)	24K (208/230 V)	30K (208/230 V)	36K (208/230 V)
PIPING	Min. Piping Length	ft. (m)	9.8 (3)	9.8 (3)	9.8 (3)	9.8 (3)	9.8 (3)	9.8 (3)	9.8 (3)	9.8 (3)
	Standard Piping Length	ft. (m)	24.6 (7.5)	24.6 (7.5)	24.6 (7.5)	24.6 (7.5)	24.6 (7.5)	24.6 (7.5)	24.6 (7.5)	24.6 (7.5)
	Max. outdoor-indoor height difference (OU higher than IU)	ft. (m)	32.8 (10)	32.8 (10)	32.8 (10)	32.8 (10)	65.6 (20)	82 (25)	82 (25)	98.4 (30)
	Max. outdoor-indoor height difference (IU higher than OU)	ft. (m)	32.8 (10)	32.8 (10)	32.8 (10)	32.8 (10)	65.6 (20)	82 (25)	82 (25)	98.4 (30)
	Max. Piping Length with no additional refrigerant charge per System (Standard Piping length)	ft. (m)	24.6 (7.5)	24.6 (7.5)	24.6 (7.5)	24.6 (7.5)	24.6 (7.5)	24.6 (7.5)	24.6 (7.5)	24.6 (7.5)
	Total Maximum Piping Length per system	ft. (m)	82 (25)	82 (25)	82 (25)	82 (25)	98.4 (30)	164 (50)	164 (50)	213 (65)
	Additional refrigerant charge (between Standard – Max piping length)	Oz/ft (g/m)	0.161(15)	0.161(15)	0.161(15)	0.161(15)	0.161(15)	0.322(30)	0.322(30)	0.322(30)
	Suction Pipe (size - connection type)	In (mm)	ø3/8” (9.52)	ø1/2” (12.7)	ø3/8” (9.52)	ø1/2” (12.7)	ø1/2” (12.7)	ø5/8” (15.9)	ø5/8” (15.9)	ø5/8” (15.9)
	Liquid Pipe (size - connection type)	In (mm)	ø1/4” (6.35)	ø1/4” (6.35)	ø1/4” (6.35)	ø1/4” (6.35)	ø1/4” (6.35)	ø3/8” (9.52)	ø3/8” (9.52)	ø3/8” (9.52)
REFRIGERANT	Refrigerant Type	Type	R410A	R410A	R410A	R410A	R410A	R410A	R410A	R410A
	Charge Amount	lb. (kg)	1.59(0.72)	1.79(0.81)	1.59(0.72)	1.79(0.81)	2.98(1.35)	3.92(1.78)	6.17(2.8)	7.5(3.4)

Refrigerant Piping:

Line sets to be sized based on the connection size of the indoor unit. Each pipe should be insulated individually.

Additional Refrigerant Calculation

- **9K-18K:** Sum Total Liquid Pipe ft. (m) - Additional Charge Required After ft. (m.) x Additional Charge oz./ft. (g/m) 0.16 (15)
- **24K:** Sum Total Liquid Pipe ft. (m) - Additional Charge Required After ft. (m.) x Additional Charge oz./ft. (g/m) 0.322 (30)

NOTE: If the calculation results in a negative number no additional refrigerant is required. Electronic expansion valves in the outdoor unit are used as metering devices.

WIRING

All wires must be sized per NEC (National Electrical Code) or CEC (Canadian Electrical Code) and local codes. See the rating plate and/or the installation instructions of the compatible outdoor unit for MCA (minimum circuit amps) and MOCP (maximum over current protection) to correctly size the wires and the disconnect fuse or breakers respectively.

Recommended Connection Method for Power and Communication Wiring:

The main power is supplied to the outdoor unit. The field supplied 14/3 stranded wire with ground with a 600 volt insulation rating, power/communication wiring from the outdoor unit to indoor unit consists of four (4) wires and provides the power for the indoor unit. Two wires are line voltage AC power, one is communication wiring (3) and the other is a ground wire. Wiring between indoor and outdoor unit is polarity sensitive. The use of BX wire is NOT recommended.

If installed in a high Electromagnetic field (EMF) area and communication issues exists, a 14/2 stranded shielded wire can be used to replace L2 and (3) between outdoor unit and indoor unit landing the shield onto ground in the outdoor unit only.

⚠ WARNING

EQUIPMENT DAMAGE HAZARD

Failure to follow this caution may result in equipment damage or improper operation.

Wires should be sized based on NEC and local codes.

⚠ CAUTION

EQUIPMENT DAMAGE HAZARD

Failure to follow this caution may result in equipment damage or improper operation.
Be sure to comply with local codes while running wire from the indoor unit to the outdoor unit.
Every wire must be connected firmly. Loose wiring may cause the terminal to overheat or result in unit malfunction. A fire hazard may also exist. Ensure all wiring is tightly connected.
No wire should touch the refrigerant tubing, compressor or any moving parts.
Disconnecting means must be provided and shall be located within sight and readily accessible from the air conditioner.
Connecting cable with conduit shall be routed through the hole in the conduit panel.

Manufacturer reserves the right to change, at any time, specifications and designs without notice and without obligations.

DIMENSIONS

Table 4 — Dimensions Heat Pump

SYSTEM SIZE			9K	12K	9K	12K	18K	24K	30K	36K
			(115V)	(115 V)	(208/230 V)	(208/230 V)	(208/230 V)	(208/230 V)	(208/230 V)	(208/230 V)
OUTDOOR UNIT	UNIT									
	HEIGHT (H)	in (mm)	21.85(555)	21.85(555)	21.85(555)	21.85(555)	21.81(554)	26.50(673)	31.89(810)	31.89(810)
	WIDTH (W)	in (mm)	30.12(765)	30.12(765)	30.12(765)	30.12(765)	31.69(805)	35.04(890)	37.24(946)	37.24(946)
	DEPTH (D)	in (mm)	11.93(303)	11.93(303)	11.93(303)	11.93(303)	12.99(330)	13.46(342)	16.14(410)	16.14(410)
	WEIGHT - NET	lbs. (kg)	57.76(26.2)	62.17(28.2)	55.11(25.0)	59.30(26.9)	73.85(33.5)	97.88(44.4)	142.86(64.8)	150.13(68.1)
			PACKAGING							
	HEIGHT	in (mm)	24.02(610)	24.02(610)	24.02(610)	24.02(610)	24.21(615)	29.13(740)	34.84(885)	34.84(885)
	WIDTH	in (mm)	34.92(887)	34.92(887)	34.92(887)	34.92(887)	36.02(915)	39.17(995)	42.91(1090)	42.91(1090)
	DEPTH	in (mm)	13.27(337)	13.27(337)	13.27(337)	13.27(337)	14.57(370)	15.67(398)	19.69(500)	19.69(500)
	WEIGHT - GROSS	lbs. (kg)	63.49(28.8)	67.68(30.7)	60.85(27.6)	64.82(29.4)	79.81(36.2)	104.50(47.4)	152.56(69.2)	158.95(72.1)
	CARTON DRAWING NO.	--	877*327*590	877*327*590	877*327*590	877*327*590	905*360*590	985*388*720	1075*485*86	1075*485*86
	CARTON MATERIAL	--	CARTON BOX							
	MATERIAL THICKNESS	in (mm)	0.197(5)	0.197(5)	0.197(5)	0.197(5)	0.197(5)	0.295(7.5)	0.295(7.5)	0.295(7.5)

Table 5 — Dimensions Cooling Only

SYSTEM SIZE			12K	9K	12K	18K	24K
			(115 V)	(208/230 V)	(208/230 V)	(208/230 V)	(208/230 V)
OUTDOOR UNIT	UNIT						
	HEIGHT (H)	in (mm)	19.49(495)	19.49(495)	19.49(495)	21.85(555)	21.81(554)
	WIDTH (W)	in (mm)	28.35(720)	28.35(720)	28.35(720)	30.12(765)	31.69(805)
	DEPTH (D)	in (mm)	10.63(270)	10.63(270)	10.63(270)	11.93(303)	12.99(330)
	WEIGHT - NET	lbs. (kg)	50.71(23)	47.38(21.49)	48.50(22)	61.51(27.9)	67.24(30.5)
			PACKAGING				
	HEIGHT	in (mm)	21.26(540)	21.26(540)	21.26(540)	24.02(610)	24.21(615)
	WIDTH	in (mm)	32.87(835)	32.87(835)	32.87(835)	34.92(887)	36.02(915)
	DEPTH	in (mm)	11.81(300)	11.81(300)	11.81(300)	13.27(337)	14.57(370)
	WEIGHT - GROSS	lbs. (kg)	54.45(24.7)	51.06(23.16)	52.47(23.8)	66.80(30.3)	72.97(33.1)
	CARTON DRAWING NO.	--	818*288*520	818*288*520	818*288*520	877*327*590	905*360*590
	CARTON MATERIAL	--	CARTON BOX				
	MATERIAL THICKNESS	in (mm)	0.197(5)	0.197(5)	0.197(5)	0.197(5)	0.295(7.5)

Manufacturer reserves the right to change, at any time, specifications and designs without notice and without obligations.

DIMENSIONS (CONT)

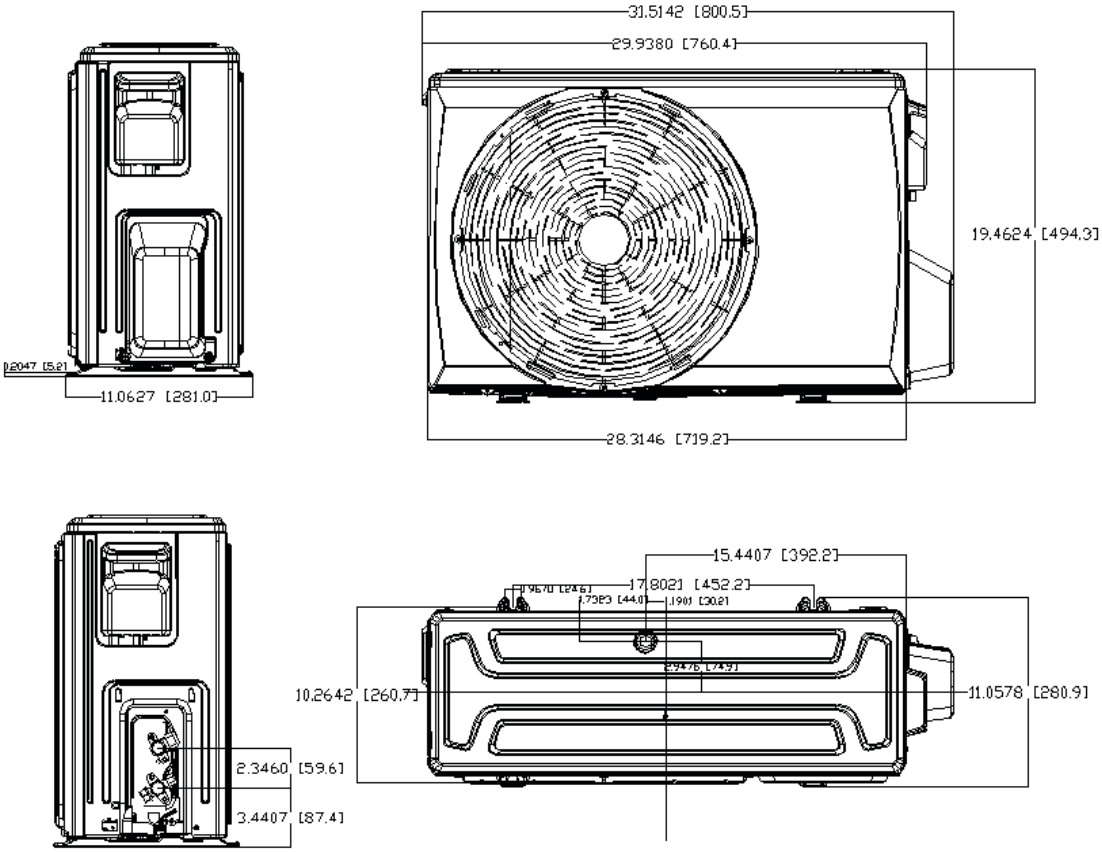

Fig. 3 — Dimensions Size 12K (115V and 208/230V) Cooling Only

DIMENSIONS (CONT)

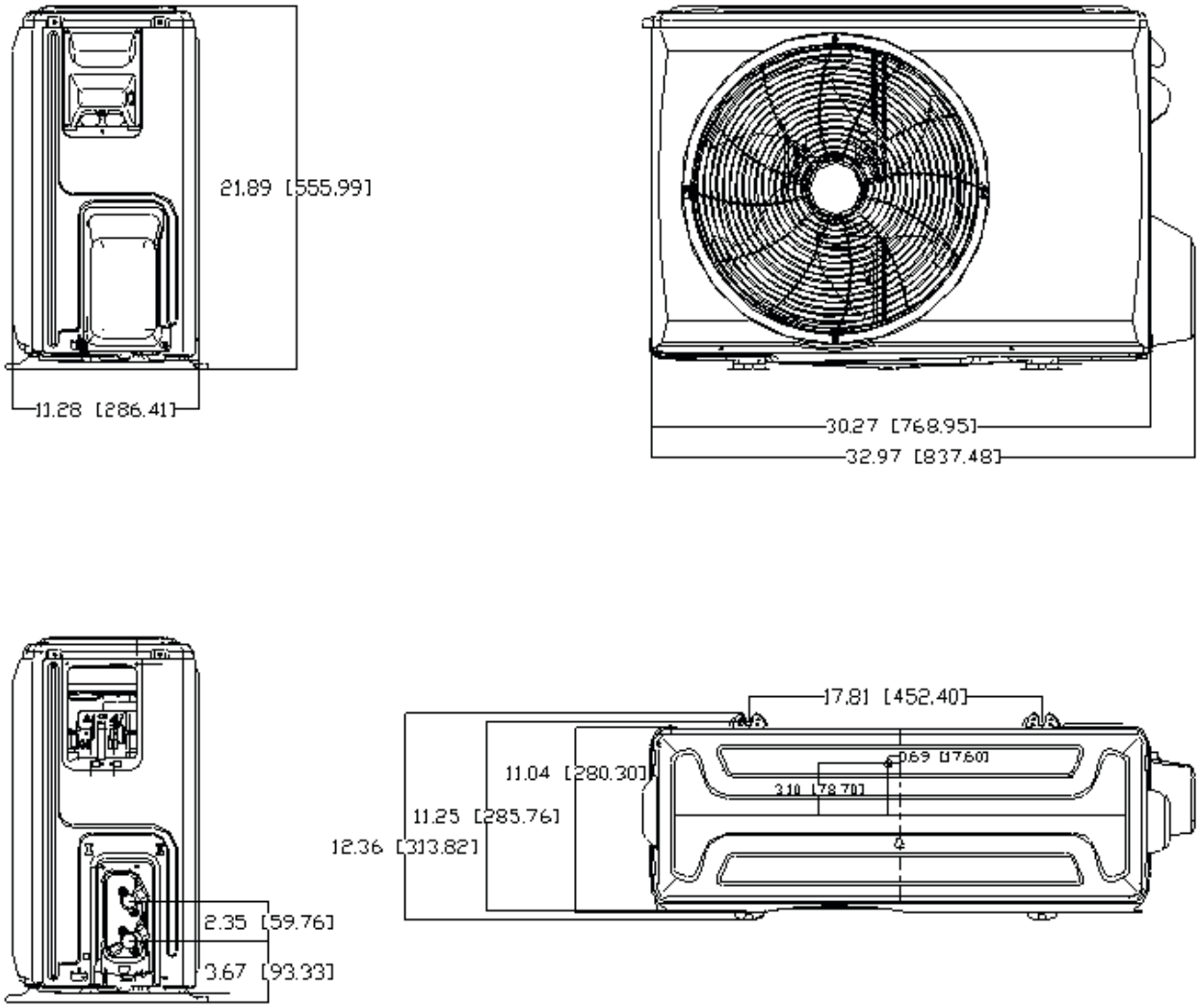

Fig. 4 — Dimension Sizes 9-12K (115V), 9-12K (208/230V) - Heat Pump & 18K (208/230V) Cooling Only

DIMENSIONS (CONT)

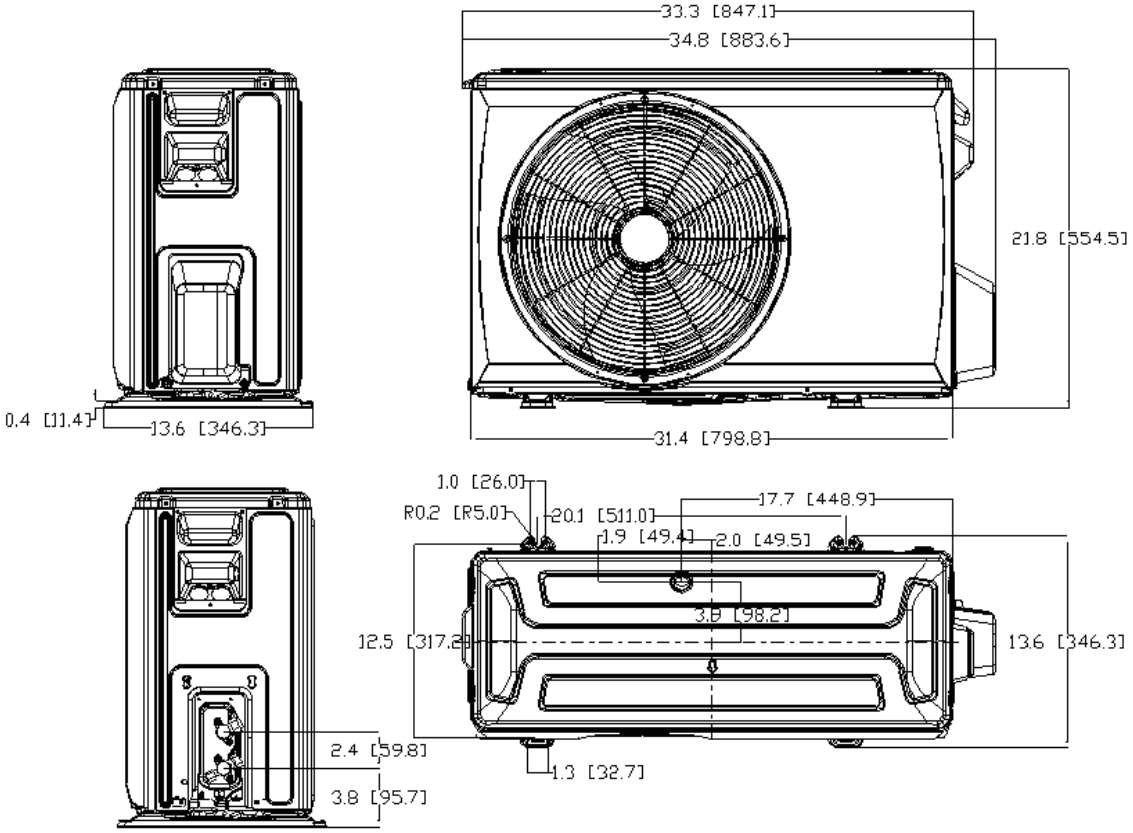

Fig. 5 — Dimensions Size 18K - Heat Pump Only

DIMENSIONS (CONT)

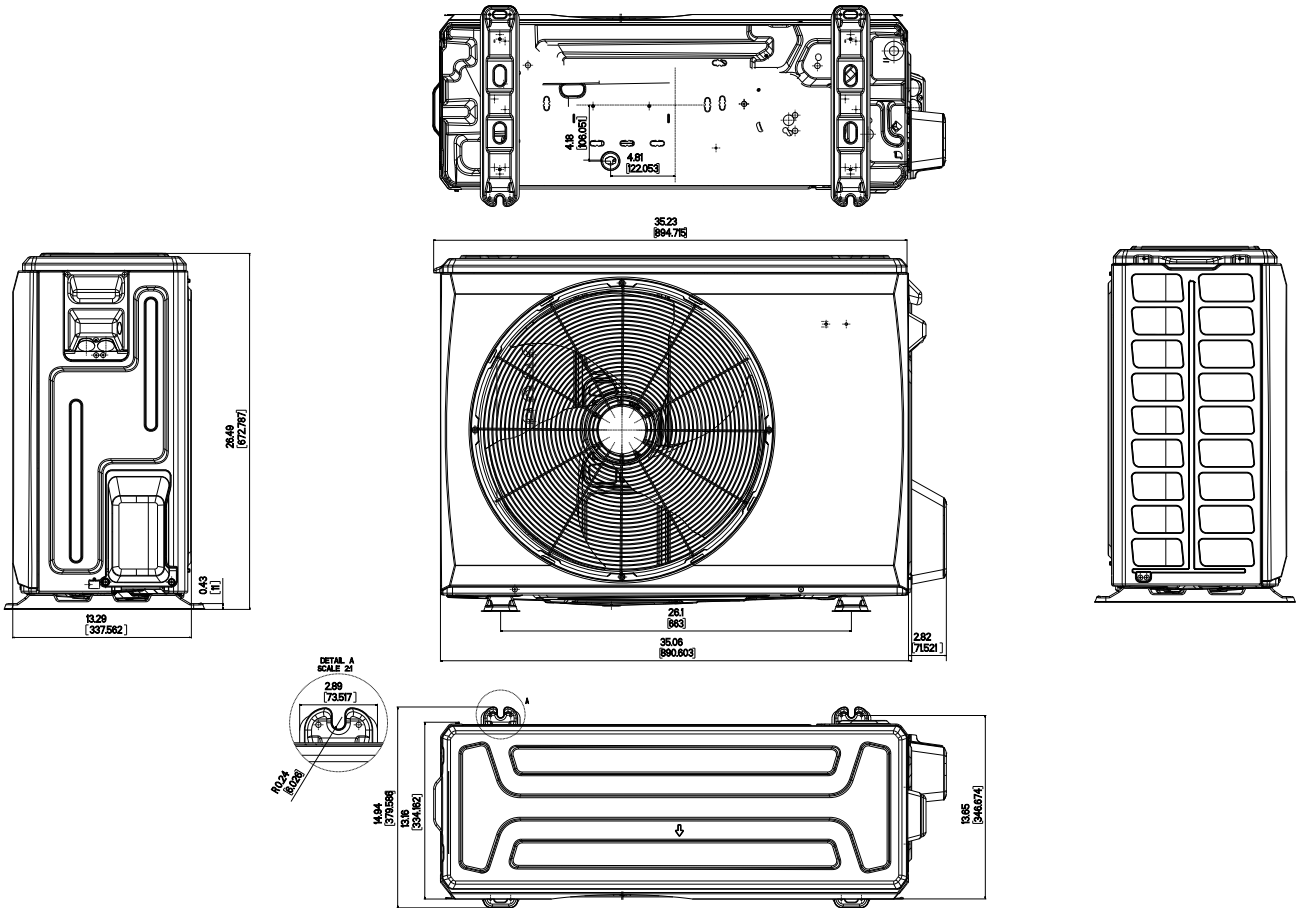

Fig. 6 — Dimensions Size 24K - Heat Pump and Cooling Only

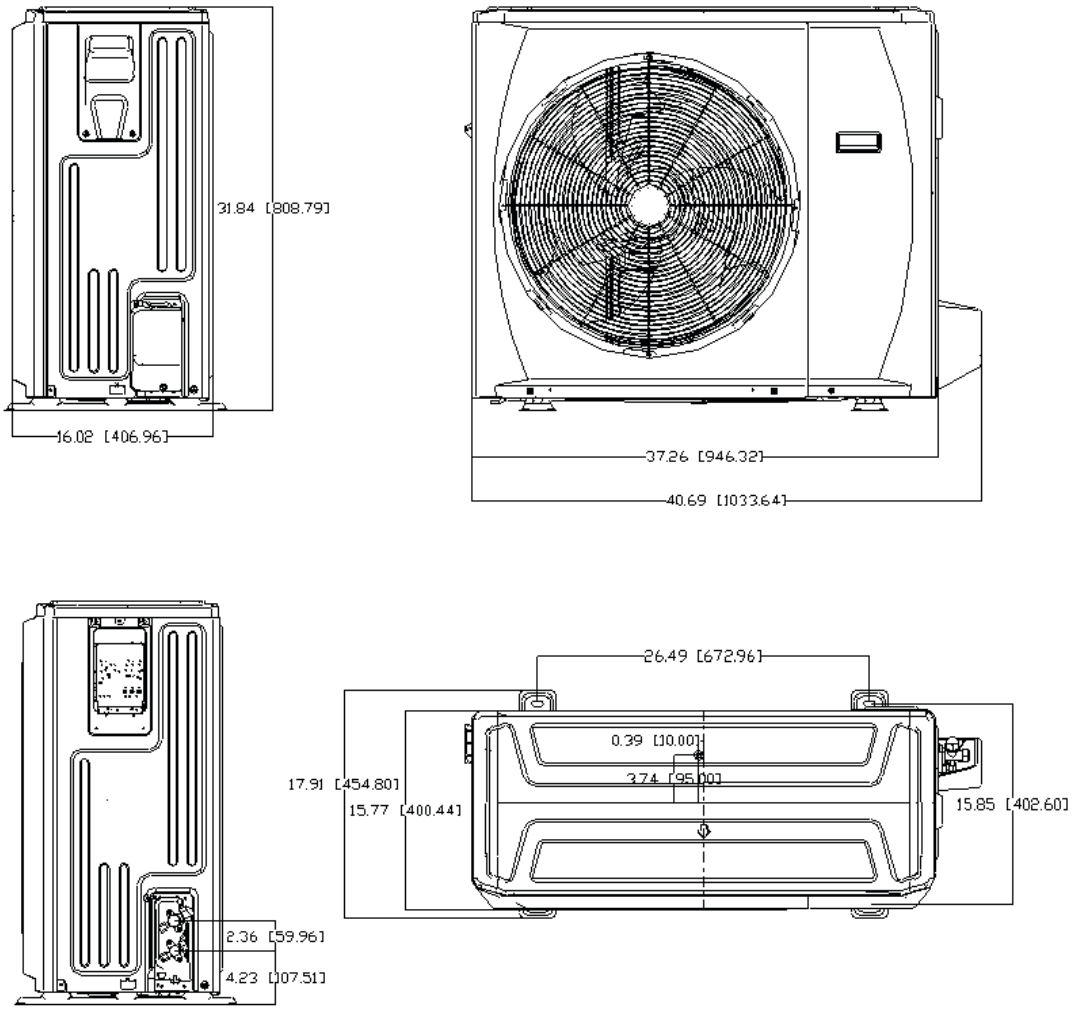

Fig. 7 — Dimensions Sizes 30-36K - Heat Pump

CLEARANCES

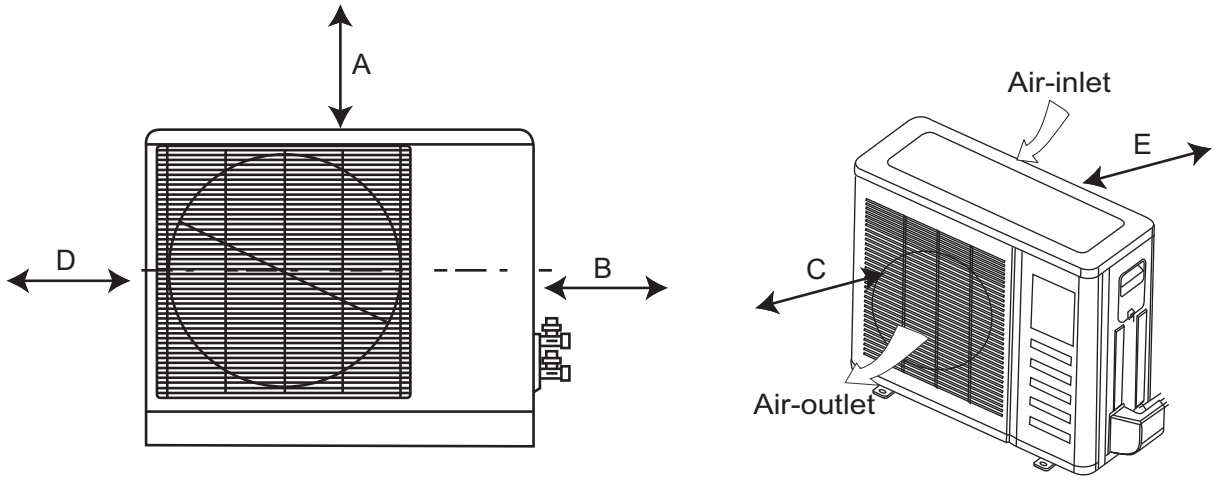

Fig. 8 — Clearances

Table 6 — Clearance Values

UNIT	MINIMUM VALUE in. (mm)
A	24 (609)
B	24 (609)
C	24 (609)
D	4 (101)
E	6 (152)

NOTE: The outdoor unit must be mounted at least 2in (50mm) above the maximum anticipated snow depth.

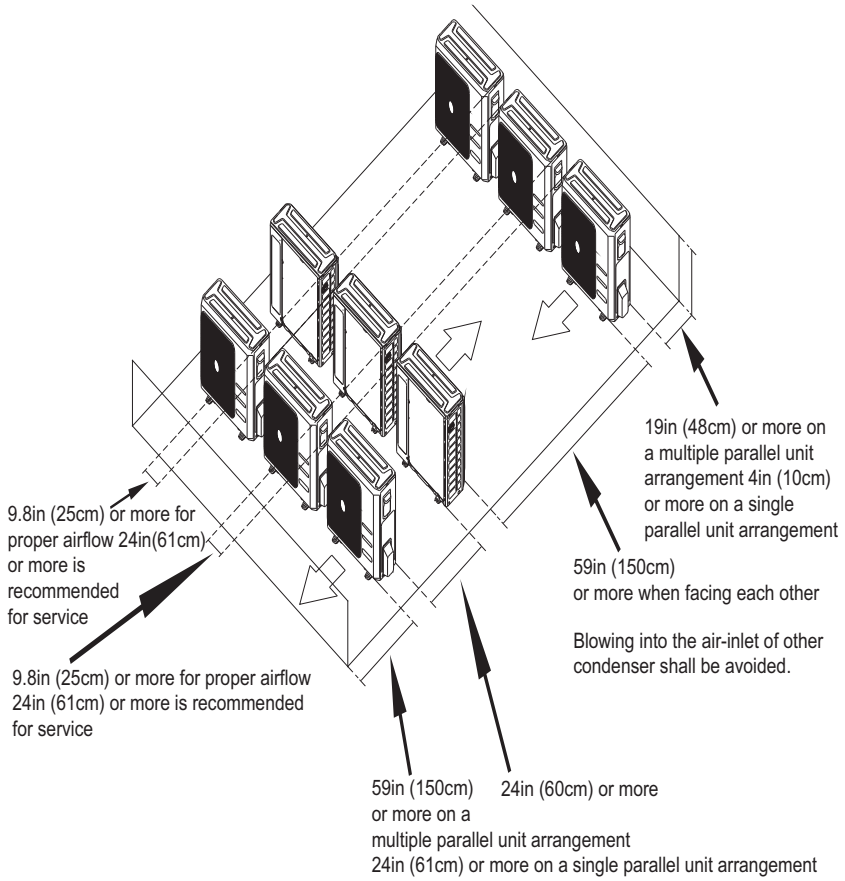

Fig. 9 —Clearances for multiple units

INSTALLATION GUIDE

INSTALLATION TIPS

Before installing the outdoor unit, choose an appropriate location. Ideal installation locations include:

Outdoor Unit

- A location which is convenient to installation and not exposed to strong winds.
- A location which can bear the weight of the outdoor unit and where the outdoor unit can be mounted in a level position.
- A location with appropriate clearances as outlined (See Fig. 8 — on page 12).
- Do not install the indoor or outdoor units in a location with special environmental conditions. For those applications, contact your Ductless representative.

OUTDOOR UNIT INSTALLATION

Install the unit by following local codes and regulations.

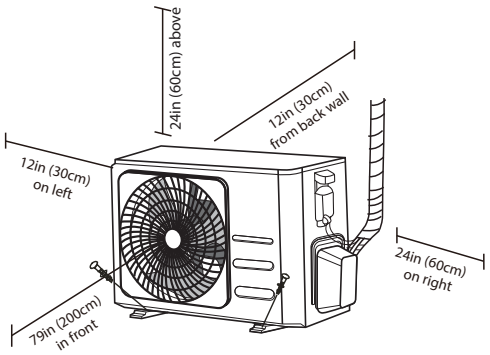

Fig. 10 — Unit Clearances

Step 1 - Select Installation Location

The following are standards that will help select an appropriate location for the unit.

- Meets all clearance requirements (see Figure 10).
- Good air circulation and ventilation
- Firm and solid-the location can support the unit and will not vibrate
- Noise from the unit will not disturb others
- Protected from prolonged periods of direct sunlight or rain
- Where snowfall is anticipated, raise the unit above the base pad to prevent ice buildup and coil damage. Mount the unit high enough to be above the average accumulated area snowfall. The minimum height must be 18 inches.

DO NOT install in the following locations:

- Near an obstacle that blocks air inlets and outlets
- Near a public street, crowded areas, or where noise from the unit may disturb others
- Near animals or plants that will be harmed by hot air discharge
- Near any source of combustible gas
- In a location that is exposed to large amounts of dust
- In a location exposed to excessive amounts of salty air

Special Considerations for Extreme Weather

If the unit is exposed to heavy wind, install the unit so the air outlet fan is at a 90° angle to the direction of the wind. If needed, build a barrier in front of the unit to protect it from extremely heavy winds.

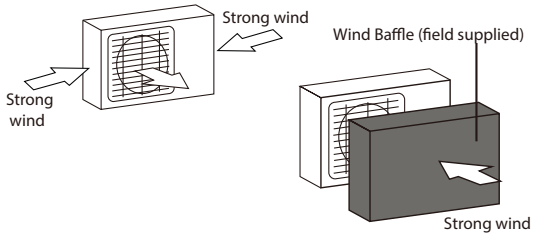

Fig. 11 — Considerations for Extreme Weather

If the unit is frequently exposed to heavy rain or snow, build a shelter above the unit to protect it from the rain or snow. Be careful not to obstruct air flow around the unit. If the unit is frequently exposed to salty air (seaside), use and outdoor unit which is especially made to resist corrosion.

Step 2 - Install Drain Joint (Heat Pump Unit Only)

Before bolting the outdoor unit in place, you must install the drain joint at the bottom of the unit. Note that there are two different types of drain joints depending on the type of outdoor unit. If the drain joint comes with a rubber seal (see Fig. 12), perform the following steps:

1. Fit the rubber seal on the end of the drain joint that connects to the outdoor unit.
2. Insert the drain joint into the hole in the base pan of the unit.
3. Rotate the drain joint 90° until it clicks in place facing the front of the unit.
4. Connect a drain hose extension (not included) to the drain joint to redirect water from the unit during heating mode.

If the drain joint does not come with a rubber seal (see Fig. 12), perform the following steps:

1. Insert the drain joint into the hole in the base pan of the unit. The drain joint clicks in place.
2. Connect a drain hose extension (field supplied) to the drain joint to redirect water from the unit during heating mode.

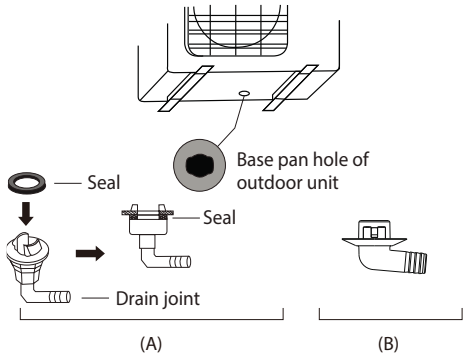

Fig. 12 — Install Drain Joint

WARNING

In cold climates, ensure that the drain hose is as vertical as possible to ensure swift water drainage. If water drains too slowly, it can freeze in the hose and flood the unit.

Step 3 - Anchor the Outdoor Unit

The outdoor unit can be anchored to the ground or to a wall-mounted bracket with bolt (M10). Table 7 provides a list of different outdoor unit sizes and the distance between their mounting feet. Prepare the unit's installation base according to the dimensions in Table 7.

Table 7 — Unit Mounting Dimensions

SYSTEM SIZE	DISTANCE A IN (MM)	DISTANCE B IN (MM)
9K-12K (HP)	17.8" (452)	11.25" (286)
12K (CO)	17.8" (452)	10.3" (261)
18K (HP)	20.1" (511)	12.5"(317)
18K (CO)	17.8" (452)	11.3" (286)
24K (HP & CO)	26.1" (663)	13.9" (354)

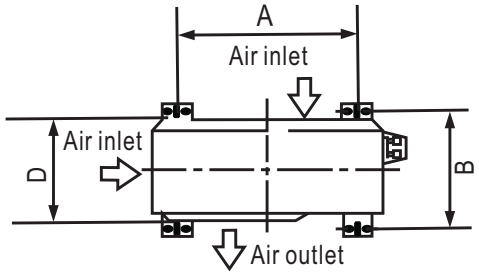

Fig. 13 — Unit Air Inlet and Outlet

If you install the unit on the ground or on a concrete mounting platform, perform the following steps:

1. Mark the positions for four expansion bolts based on the dimensions charts.
2. Pre-drill holes for expansion bolts.
3. Place a nut on the end of the expansion bolt.
4. Hammer expansion bolts into the pre-drilled holes.
5. Remove the nuts from the expansion bolts, and place the outdoor unit on bolts.
6. Put the washer on each expansion bolt then replace the nuts.
7. Using a wrench, tighten each nut until snug.

CAUTION

When drilling into concrete, eye protection is recommended at **all** times.

To install the unit on a wall-mounted bracket, perform the following steps:

CAUTION

Ensure the wall is made of a solid brick, concrete, or of similarity strong material. The wall must be able to support at least four times the weight of the unit.

1. Mark the position of the bracket holes based on the dimensions chart.
2. Pre-drill the holes for the expansion bolts.
3. Place a washer and nut on the end of each expansion bolt.
4. Thread expansion bolts through holes in the mounting brackets.
5. Put mounting brackets in position and hammer the expansion bolts into the wall.
6. Ensure the mounting brackets are level.
7. Carefully lift the unit and place its mounting feet on the brackets.
8. Bolt the unit firmly to the brackets.
9. If allowed, install the unit with rubber gaskets to reduce vibrations and noise.

Step 4 - Connect the Signal and Power Cables

The outside unit's terminal block is protected by an electrical wiring cover on the side of the unit. A comprehensive wiring diagram is printed on the inside of the wiring cover.

WARNING

Before performing any electrical or wiring work, turn off the main power to the system.

1. Prepare the cable for connection.

Use the Right Cable

The size of the power supply cable, signal cable, fuse, and disconnect needed is determined by the maximum current of the unit. The maximum current is indicated on the nameplate located on the side panel of the unit.

NOTE: Select the right cable size according to the Minimum Circuit Ampacity indicated on the nameplate of the unit.

a. Using wire strippers, strip the outer insulation from both ends of the cable to reveal about 1.5in (40mm) of the wires inside.
b. Strip the insulation from the ends of the wires.
c. Using a wire crimper, crimp u-lugs on the ends of the wires.

WARNING

All wiring work must be performed strictly in accordance with the wiring diagram located inside the wire cover of the outdoor unit.

2. Unscrew the electrical wiring cover and remove it.
3. Unscrew the cable clamp below the terminal block and place it to the side.
4. Connect the wire according to the wiring diagram, and firmly screw the u-lug of each wire to its corresponding terminal.
5. After ensuring that sure every connection is secure, loop the wires around to prevent rain water from flowing into the terminal.
6. Using the cable clamp, fasten the cable to the unit.
7. Screw the cable clamp down tightly.
8. Insulate unused wires with PVC electrical tape. Arrange them so that they do not touch any electrical or metal parts.
9. Replace the wire cover on the side of the unit, and screw it in place.

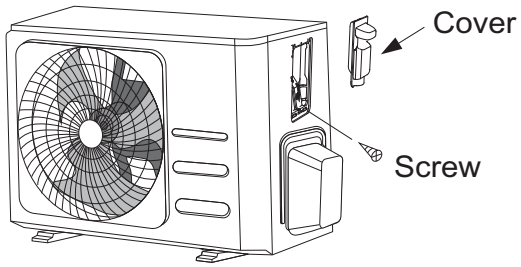

Fig. 14 — Cover and Screw

NOTE: If the cable clamp resembles Figure 15, select the appropriate hole according to the diameter of the wire.

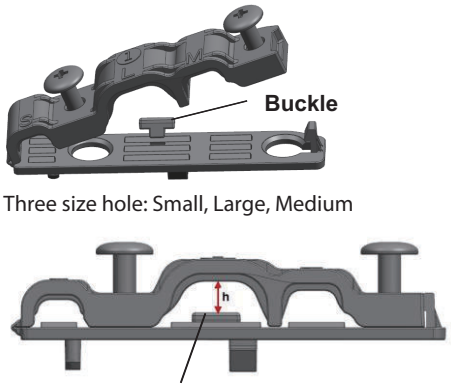

Fig. 15 — Buckle

1. Remove the wire cover from the unit by loosening the 3 screws.
2. Remove the caps on the conduit panel.
3. Mount the conduit (field supplied) on the conduit panel.
4. Connect both the power supply and low voltage lines to the corresponding terminals on the terminal blocks.
5. Ground the unit in accordance with local codes.
6. Be sure to leave several inches 4 to 6 inches of slack in the wiring to facilitate installation and future service work.
7. Use lock nuts to secure the conduit.

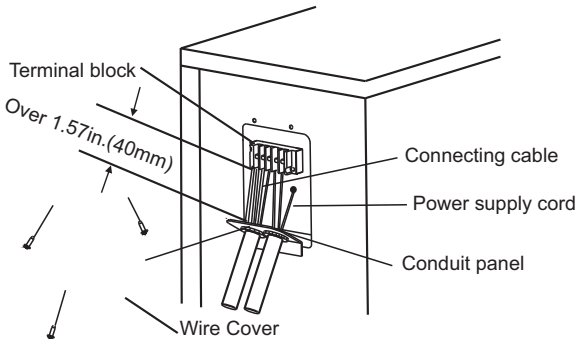

Select the appropriate through-hole according to the diameter of the wire.

Fig. 16 — Terminal Block

Step 5 - Refrigerant Piping

When connecting refrigerant piping, do not allow substances or gases other than the specified refrigerant to enter the unit. The presence of other gases or substances will lower the unit's capacity and can cause abnormally high pressure in the refrigeration cycle. This can cause explosion and injury.

NOTE: The length of the refrigerant piping affects the performance and energy efficiency of the unit. Nominal efficiency is tested on units with a pipe length of 16.5ft (5m) (in North America, the standard pipe length is 25ft (7.5m). A minimum pipe run of 9.8ft (3m) is required to minimize vibration and excessive noise.

Table 8 — Maximum Length and Drop Height of Refrigerant Piping per Unit Model

Model	Capacity	Max. Length (ft/m)	Max. Lift (ft/m)
R410A Fixed-speed Split Air Conditioner	9,000 - 12,000	82ft (25m)	33ft (10m)
	18,000	98ft (30m)	66ft (20m)
	24,000	164ft (50m)	82ft (25m)

Use the following steps to connect the refrigerant piping:

1. Run the interconnecting piping from the outdoor unit to the indoor unit.
2. Connect the refrigerant piping and drain line outside the indoor unit. Complete the pipe insulation at the flare connection then fasten the piping and wiring to the wall as required. Completely seal the hole in the wall.
3. Piping:
   a. Cut the pipe, with a pipe cutter, at 90 degrees (see Fig. 17).
   b. Remove the service connection (if provided with the unit).

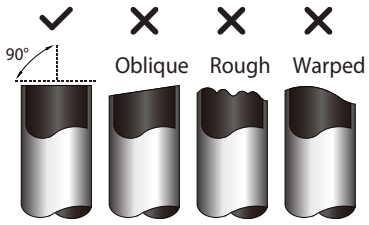

Fig. 17 — Pipe Cutting

   c. Remove all the burrs from the cut cross section of the pipe, avoiding any burrs from inside the tubes.
   d. Remove the flare nuts attached to the indoor and outdoor units.
   e. Install the correct size flare nut onto the tubing and make the flare connection. Refer to Table 9 for flare nut spacing.

Table 9 — Flare Nut Spacing

OUTER DIAM. IN (MM)	A IN (MM)	
	MAX.	MIN.
Ø 1/4in (6.35mm)	0.05in (1.3mm)	0.03in (0.7mm)
Ø 3/8in (9.52mm)	0.06in (1.6mm)	0.04in (1.0mm)
Ø 1/2in (12.7mm)	0.07in (1.8mm)	0.04in (1.0mm)
Ø 5/8in (15.88mm)	0.09in (2.2mm)	0.08in (2.0mm)

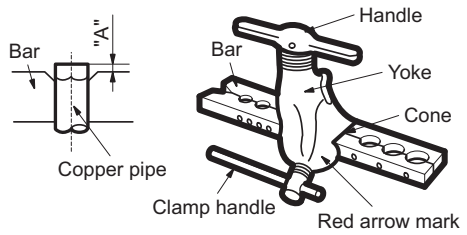

Fig. 18 — Flare Nut Spacing

f. Apply a small amount of refrigerant oil onto the flare connection on the tubing.
g. Align the center of the pipes and/or the service valve.

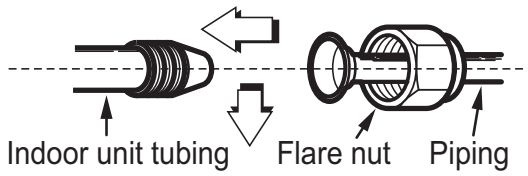

Fig. 19 — Align Pipe Center

h. Connect both the liquid and gas piping to the indoor unit.
i. Tighten the flare nut with a torque wrench.
j. Using the correct wrench, grip the nut on the unit tubing.
k. While firmly gripping the nut on the unit tubing, use a torque wrench to tighten the flare nut according to the torque values in the Tightening Torque Requirements (Table 10). Loosen the flaring nut slightly, then tighten again.

Table 10 — Tightening Torque Requirements

PIPE DIAMETER IN.(MM)	TIGHTENING TORQUE	
	FT-LB	N-M
Ø1/4” (6.35)	10 to 13	13.6 to 17.6
Ø3/8” (9.52)	24 to 31	32.5 to 42.0
Ø1/2” (12.7)	37 to 46	50.1 to 62.3
Ø5/8” (15.88)	50 to 60	67.7 to 81.3

Connect Piping to the Outdoor Unit

1. Unscrew the cover from the packed valve on the side of the outdoor unit.
2. Remove the protective caps from the valve ends.
3. Align the flared pipe end with each valve, and tighten the flare nut as tightly as possible by hand.
4. Using a spanner, grip the body of the valve. Do not grip the nut that seals the service valve.

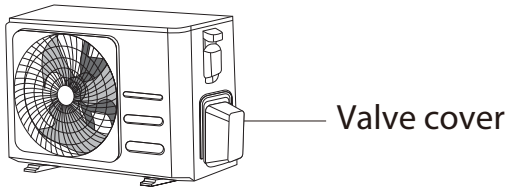

Fig. 20 — Valve cover

5. While firmly gripping the body of the valve, use a torque wrench to tighten the flare nut according to the correct torque values.
6. Loosen the flaring nut slightly, then tighten again.
7. Repeat steps 3 to 6 for the remaining pipe.

NOTE: Use a spanner to grip the main body of the valve. Torque from tightening the flare nut can snap off other parts of the valve.

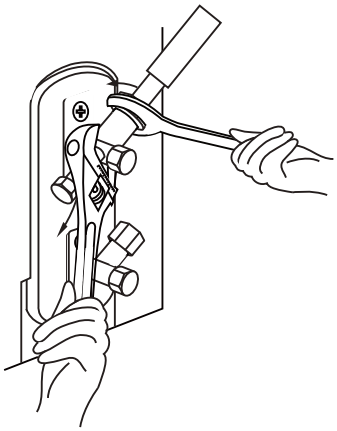

Fig. 21 — Use proper size wrenches

Step 6 - Evacuate Coil and Tubing System

CAUTION

UNIT DAMAGE HAZARD
Failure to follow this caution may result in equipment damage or improper operation.
Never use the system compressor as a vacuum pump.

Refrigerant tubes and the indoor coil should be evacuated using the recommended 500 microns deep vacuum method. The alternate triple evacuation method may be used if the procedure outlined below is followed.

NOTE: Always break a vacuum with dry nitrogen.

Using Vacuum Pump

1. Completely tighten flare nuts A, B, C, D, connect the manifold gage charge hose to a charge port of the low side service valve (see Fig. 22).
2. Connect the charge hose to vacuum pump.
3. Fully open the low side of manifold gage (see Fig. 23).
4. Start the vacuum pump.
5. Evacuate using either the deep vacuum or triple evacuation method.
6. After evacuation is complete, fully close the low side of manifold gage and stop the vacuum pump operation.
7. The factory charge contained in the outdoor unit is good for up to 25 ft. (8 m) of line length. For refrigerant lines longer than 25 ft. (8 m), add refrigerant, up to the allowable length.
8. Disconnect the charge hose from the charge connection of the low side service valve.
9. Fully open service valves B and A.
10. Securely tighten the service valve caps.

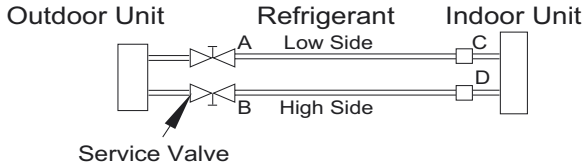

Fig. 22 — Service Valve

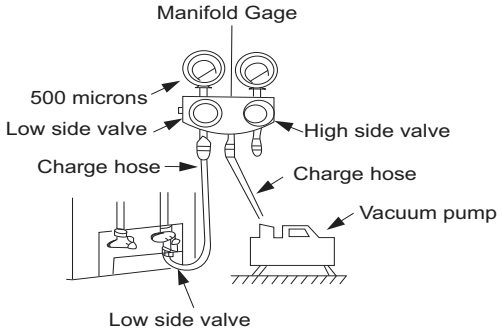

Fig. 23 — Manifold

Evacuation

Evacuation of the system will remove air or nitrogen (non-condensables) as well as moisture. A proper vacuum assures a tight, dry system before charging with refrigerant. The two methods used to evacuate a system are the deep vacuum method and the triple vacuum method.

Deep Vacuum Method

The deep vacuum method requires a vacuum pump capable of pulling a vacuum of 500 microns and a vacuum gauge capable of accurately measuring this vacuum depth. The deep vacuum method is the most positive way of assuring a system is free of air and moisture (see Fig. 24).

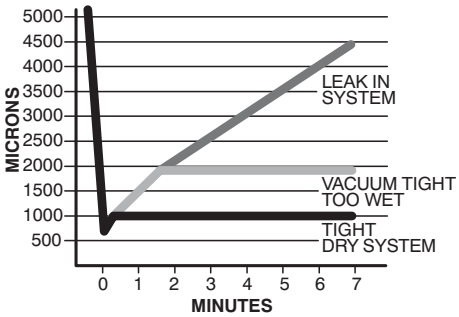

Fig. 24 — Deep Vacuum Graph

Triple Evacuation Method

The triple evacuation method should be used when vacuum pump is not capable of pumping down to 500 microns and system does not contain any liquid water. Refer to Fig. 25 and proceed as follows:

1. Attach the refrigeration gauges and evacuate system down to 28 in. of mercury and allow the pump to continue operating for an additional 15 minutes.
2. Close the service valves and shut off the vacuum pump.
3. Connect a nitrogen cylinder and regulator to the system and flow nitrogen until the system pressure is 2 psig.
4. Close the service valve and allow the system to stand for 1 hour. During this time, dry nitrogen will diffuse throughout the system absorbing moisture.
5. Repeat this procedure as indicated in Fig. 25. The system should now be free of any contaminants and water vapor.

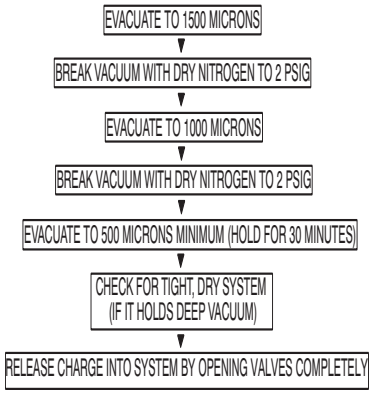

Fig. 25 — Triple Evacuation Method

Final Tubing Check

IMPORTANT: Ensure the factory tubing on both the indoor and outdoor unit has not shifted during shipment. Ensure tubes are not rubbing against each other or any sheet metal. Pay close attention to the feeder tubes and make sure the wire ties on the feeder tubes are secure and tight.

WIRING

Size all wires per the NEC (National Electrical Code) or CEC (Canadian Electrical Code) and local codes. Use the electrical data from the outdoor unit (MCA - minimum circuit amps and MOCP - maximum over current protection), to correctly size the wires and the disconnect fuse or breakers respectively.

SIZES 9-24 RECOMMENDED CONNECTION METHOD FOR POWER AND COMMUNICATION WIRING

Power and Communication Wiring: The main power is supplied to the outdoor unit. The field supplied 14/3 power/communication wiring, from the outdoor unit to the indoor unit, consists of four (4) wires and provides the power for the indoor unit. Two wires are high voltage AC power, one is communication wiring and the other is a ground wire.

To minimize communication interference: If installed in a high Electromagnetic field (EMF) area and communication issues arise, a 14/2 stranded shielded cable can be used to replace L2 and (3) between the outdoor and indoor units - landing the shield onto the ground in the outdoor unit only.

⚠ CAUTION

EQUIPMENT DAMAGE HAZARD

Be sure to comply with local codes while running wire from the indoor unit to the outdoor unit.

Every wire must be connected firmly. Loose wiring may cause the terminal to overheat or result in a unit malfunction. A fire hazard may also exist. Ensure all wiring is tightly connected.

No wire should touch the refrigerant tubing, compressor or any moving parts.

Disconnecting means must be provided and located within sight and readily accessible from the system. Route the connecting cable with conduit through the hole in the conduit panel.

NOTE: The main power is supplied to the outdoor unit. When disconnecting the power of the outdoor unit, the indoor unit would lose power. A disconnect switch is not required on the Indoor unit side on the wiring between the outdoor and indoor unit. A 3 pole disconnect may be used for extra protection between the indoor and outdoor unit (refer to local codes).

Step 7 - Electrical And Gas Leak Checks

Before Test Run

Only perform a test run after you have completed the following.

- **Electrical Safety Checks** – Confirm that the unit's electrical system is safe and operating properly
- **Gas Leak Checks** – Check all flare nut connections and confirm that the system is not leaking
- Confirm that gas and liquid (high and low pressure) valves are fully open

Electrical Safety Checks

After the installation, confirm that all electrical wiring is installed in accordance with local and national regulations, and according to the Installation Manual.

Before Test Run

Check Grounding Work

Measure the grounding resistance by visual detection and with grounding resistance tester. Grounding resistance must be less than 0.1 W.

NOTE: This may not be required for some locations in North America.

During Test Run

Check for Electrical Leakage

During the Test Run, use an electroprobe and multimeter to perform a comprehensive electrical leakage test. If electrical leakage is detected, turn off the unit immediately and call a licensed electrician to find and resolve the cause of the leakage.

NOTE: This may not be required for some locations in North America.

Gas Leak Checks

There are two different methods to check for gas leaks.

Soap and Water Method

Using a soft brush, apply soapy water or liquid detergent to all pipe connection points on the indoor unit and outdoor unit. The presence of bubbles indicates a leak.

Leak Detector Method

If using a leak detector, refer to the device's operation manual for proper usage instructions.

After Performing Gas Leak Checks

After confirming that the all pipe connection points **DO NOT** leak, replace the valve cover on the outside unit.

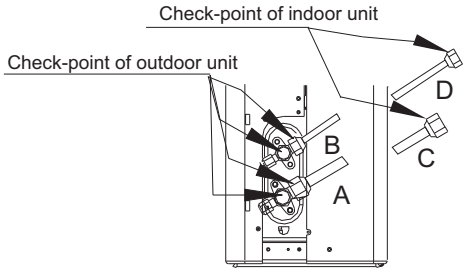

A: Low pressure stop valve
B: High pressure stop valve
C & D: Indoor unit flare nuts

Fig. 26 — Gas Leak Checks

MAKE REFRIGERANT PIPING CONNECTIONS (OUTDOOR UNIT)

IMPORTANT: Use refrigeration grade tubing ONLY. No other type of tubing may be used. Use of other tubing types will void the manufacturer's warranty.

Piping Guide:

- Do not open service valves or remove protective caps from tubing ends until all the connections are made.
- Bend the tubing with bending tools to avoid kinks and flat spots.
- Keep the tubing free of dirt, sand, moisture, and other contaminants to avoid damaging the refrigerant system.
- Avoid sags in the suction line to prevent the formation of oil traps. Insulate each tube with minimum 3/8-in. (10 mm) wall thermal pipe insulation. Inserting the tubing into the insulation before making the connections saves time and improves installation quality.

1. Remove the service valve cover, if provided with the unit.
2. Cut the pipe, with a pipe cutter, at 90 degrees (see Fig. 27).
3. Remove the service connection, if provided with the unit.

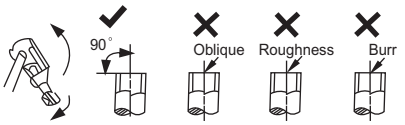

Fig. 27 — Cut the pipe

4. Remove all the burrs from the cut cross section of the pipe avoiding any burrs inside the tubes.
5. Remove the flare nuts attached to the indoor and outdoor units.
6. Install the correct size flare nut onto the tubing and make a flare connection. Refer to Table 11 for the flare nut spaces.

Table 11 — Flare Nut Spacing

OUTER DIAM. (mm)	A (mm)	
	Max.	Min.
Ø1/4" (6.35)	0.05 (1.3)	0.03 (0.7)
Ø3/8" (9.52)	0.06 (1.6)	0.04 (1.0)
Ø1/2" (12.7)	0.07 (1.8)	0.04 (1.0)
Ø5/8" (15.88)	0.09 (2.2)	0.08 (2.0)

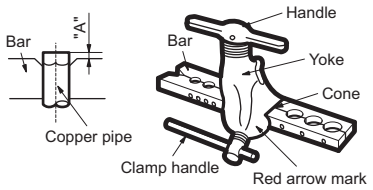

Fig. 28 — Flare Nut Spacing

7. Apply a small amount of refrigerant oil to the flare connection on the tubing.
8. Align the center of the pipes and/or the service valve.

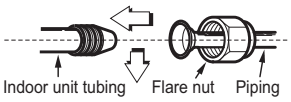

Fig. 29 — Align Pipe Center

9. Connect both the liquid and gas piping to the indoor unit.
10. Tighten the flare nut using a torque wrench as specified in Table 12.
11. Complete the installation.

Table 12 — Tightening Torque

Pipe Diameter	Tightening Torque	
	Ft-lb	N-m
Ø1/4	10 to 13	13.6 to 17.6
Ø3/8	24 to 31	35.5 to 42.0
Ø1/2	37 to 46	50.1 to 62.3
Ø5/8	50 to 60	67.7 to 81.3

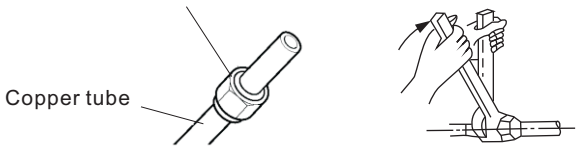

Fig. 30 — Tighten the Flare Nut

CAUTION

EQUIPMENT DAMAGE HAZARD
Failure to follow this caution may result in equipment damage or improper operation. Excessive torque can break the flare nut depending on installation conditions.

INSTALL ALL POWER AND INTERCONNECTING WIRING TO OUTDOOR UNIT

1. Mount the outdoor power disconnect.
2. Run the power wiring from the main box to the disconnect per the NEC and local codes.
3. Remove the field wiring cover (if available) from the unit by loosening the screws.
4. Remove the caps on the conduit panel.
5. Connect the conduit to the conduit panel (see Fig. 31).
6. Properly connect the power supply and the control lines to the terminal block per the connection diagram.
7. Ground the unit in accordance with the NEC and local electrical codes.
8. Use the lock nuts to secure the conduit.
9. Reinstall the field wiring cover.

CAUTION

EQUIPMENT DAMAGE HAZARD
Failure to follow this caution may result in equipment damage or improper operation.
Comply with the local codes while running wire from the indoor unit to the outdoor unit.
Every wire must be connected firmly. Loose wiring may cause the terminal to overheat or result in unit malfunction. A fire hazard may also exist. Therefore, ensure all wiring is tightly connected.
No wire should be allowed to touch the refrigerant tubing, compressor or any moving parts.
Disconnecting means must be provided and shall be located within sight and readily accessible from the air conditioner.
Connecting cable with conduit shall be routed through hole in the conduit panel.

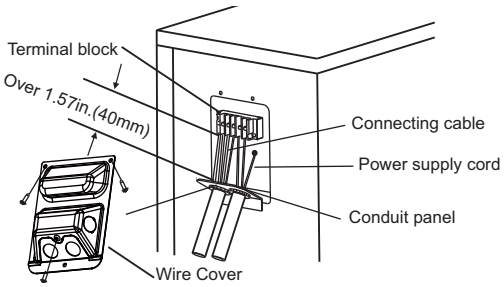

Select the appropriate through-hole according to the wire diameter.

Fig. 31 — Field Wiring

DRAIN CONNECTIONS

Installed drains must meet local sanitation codes.

Install the outdoor unit drain joint

1. Fit the seal into the drain joint.
2. Insert the drain joint into the base pan hole of the outdoor unit.
3. Rotate 90° to securely assemble them.
4. Connect the drain joint with an extension drain hose to avoid condensate from draining off the outdoor unit during the heating mode.

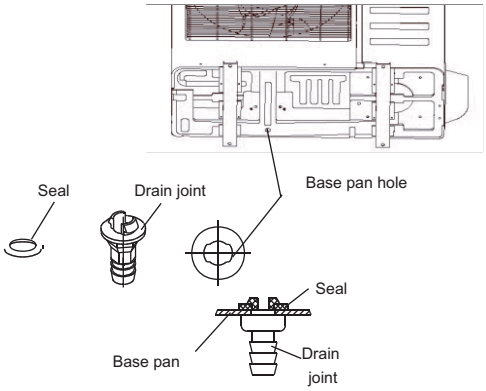

Fig. 32 — Drain Joint

CAUTION

In cold climates, ensure the drain hose is as vertical as possible to ensure swift water drainage.
If water drains too slowly, it can freeze in the hose and flood the unit.

NOTE: Basepan built-in with multiple holes for proper draining during defrost. For applications where it is required to seal these holes, and re-direct the condensate drain, rubber plugs are available through Replacement Components (RC).

Table 13 — Rubber Plugs

Outdoor Unit Model Number	Basepan Rubber Plugs RC Part Number	Quantity per unit
9K-12K	12600801A00077	32
18K		26
24K		34

ELECTRICAL DATA

Table 14 — Electrical Data - Heat Pump System

OUTDOOR UNIT		9K	12 K	9K	12K	18K	24K	30K	36K
		(115 V)	(115 V)	(208/230V)	(208/230V)	(208/230V)	(208/230V)	(208/230V)	(208/230V)
Minimum Circuit Ampacity (MCA)	A	20	18.5	12	15	15	19	25	28
Maximum Overcurrent Protection Ampacity (MOPA)	A	30	25	15	15	20	30	30	35
Voltage-Phase-Frequency		115-1-60		208/230-1-60					
Max – Min Voltage Range		127-104		253-187					
COOLING									
Running Current	(A)	6.3	10.5	3.41	5.2	7	11.12	12.1	18.5
Power Consumption	(W)	725	1212	782	1176	1610	2570	2700	4235
Power Factor	(%)	79.2	81.8	97.6	97.5	99.1	99.3	96.2	98.7
HEATING									
Running Current Range	(A)	7.82	10.4	4.1	5	7.2	10.25	12.2	18.3
Power Consumption	(W)	900	1172	944	1131	1650	2320	2700	4200
Power Factor	(%)	80.5	81.5	98	96.3	99.17	99.2	96.3	98.7

Table 15 — Electrical Data - Cooling Only

OUTDOOR UNIT		12K	9K	12K	18K	24K
		(115 V)	(208/230V)	(208/230V)	(208/230V)	(208/230V)
Minimum Circuit Ampacity (MCA)	A	18	11	11	16	16
Maximum Overcurrent Protection Ampacity (MOPA)	A	30	15	15	20	20
Voltage-Phase-Frequency		115-1-60	208/230-1-60			
Max – Min Voltage Range		127-104	253-187			
		COOLING				
Running Current	(A)	8.5	3.13	4.2	6.8	9.3
Power Consumption	(W)	720	960	1570	2150	720
Power Factor	(%)	68.81	82	98	99	99.28

*Permissible limits of the voltage range at which the unit will operate satisfactorily.

CONNECTION DIAGRAMS

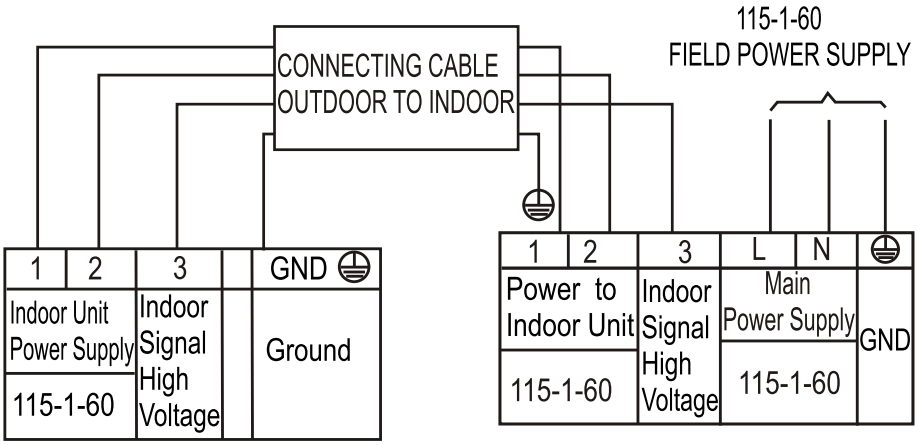

Fig. 33 — Connection Diagram Size 115V

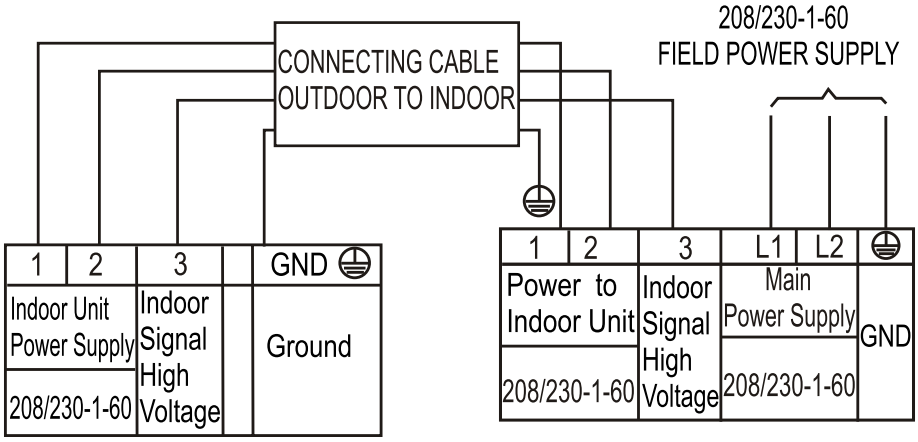

Fig. 34 — Connection Diagram Size 208/230V

NOTES:

1. **Do not use the thermostat wire for any connection between indoor and outdoor units.**
2. **All connections between indoor and outdoor units must be as shown. The connections are sensitive to polarity and will result in a fault code.**

SYSTEM VACUUM AND CHARGE

CAUTION

UNIT DAMAGE HAZARD
Failure to follow this caution may result in equipment damage or improper operation.
Never use the system compressor as a vacuum pump.

Refrigerant pipes and indoor unit coils should be evacuated using the recommended 500 microns deep vacuum method. The alternate triple evacuation method may be used if the following procedure is followed.

NOTE: Always break a vacuum with dry nitrogen.

Using a Vacuum Pump

1. Completely tighten flare nuts A, B, C, D and connect the manifold gage charge hose to a charge port of the low side service valve (see Fig. 35).
2. Connect the charge hose to vacuum pump.
3. Fully open the low side of manifold gage (see Fig. 36).
4. Start the vacuum pump.
5. Evacuate using either the deep vacuum or triple evacuation method.
6. After evacuation is complete, fully close the low side of manifold gage and stop the vacuum pump operation.
7. The factory charge contained in the outdoor unit is good for up to 25 ft. (8 m) of line length. For refrigerant lines longer than 25 ft. (8 m), add refrigerant, up to the allowable length, as specified in "SYSTEM REQUIREMENTS" on page 4.
8. Disconnect the charge hose from the charge connection of the low side service valve.
9. Fully open service valves B and A.
10. Securely tighten the service valve caps.

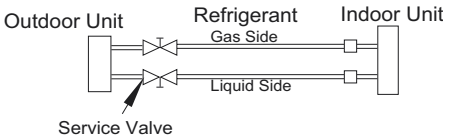

Fig. 35 — Service Valve

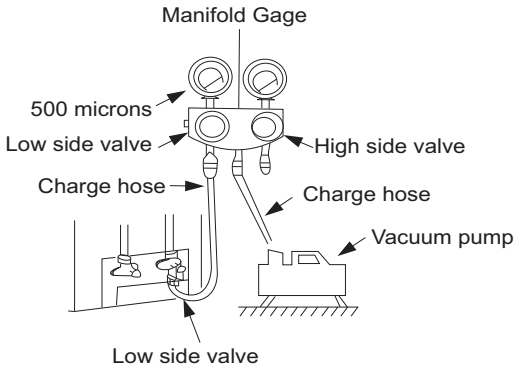

Fig. 36 — Manifold Gauge

Deep Vacuum Method

The deep vacuum method requires a vacuum pump capable of pulling a vacuum of 500 microns and a vacuum gauge capable of accurately measuring this vacuum depth. The deep vacuum method is the most positive way of assuring a system is free of air and liquid water (see Fig. 37).

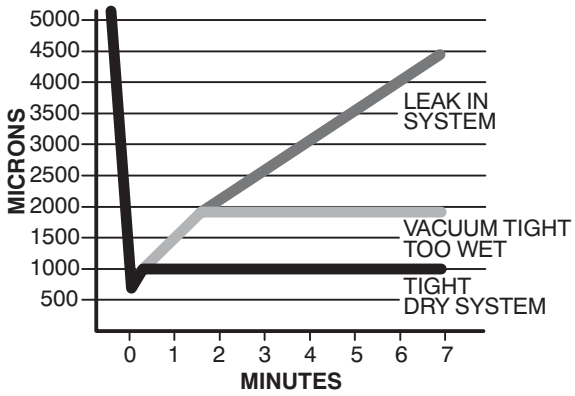

Fig. 37 — Deep Vacuum Graph

Triple Evacuation Method

The triple evacuation is the recommended method of dehydration. Refer to Fig. 38 and proceed as follows:

1. Pump the system down to 1500 microns and allow the pump to continue operating for an additional 15 minutes.
2. Close the service valves and shut off the vacuum pump.
3. Connect a dry nitrogen cylinder and regulator to the system and break vacuum until the system reaches 2 psig.
4. Close the service valve and allow the system to stand for 1 hr. During this time, the dry nitrogen can diffuse throughout the system absorbing moisture.
5. Pump the system down to 1000 microns.
6. Break the vacuum with dry nitrogen (2 psig).
7. Pump the system down to 500 microns.
8. Perform the hold test for 30 minutes.

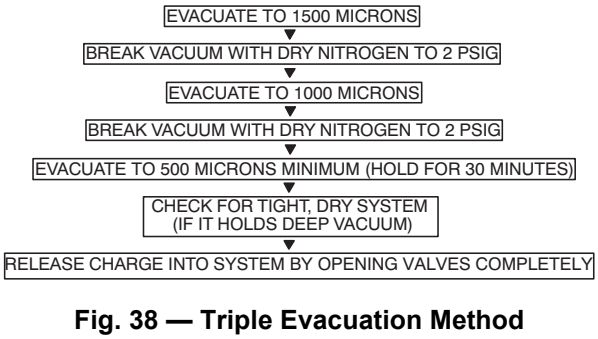

Fig. 38 — Triple Evacuation Method

Final Tubing Check

IMPORTANT: Ensure the factory tubing on both the indoor and outdoor unit has not shifted during shipment. Ensure tubes are not rubbing against each other or any sheet metal. Pay close attention to feeder tubes, making sure wire ties on the feeder tubes are secure and tight.

START-UP

CAUTION

DO NOT apply power to the outdoor unit if the Master Service Valves are not fully open. Compressor damage will occur.

TEST OPERATION

Perform a test operation after completing a gas leak and electrical safety check. Review the indoor unit installation instructions and owner's manual for additional start up information.

System Checks

1. Conceal the tubing where possible.
2. Ensure the drain tube slopes downward along its entire length.
3. Ensure all tubing and connections are properly insulated.
4. Fasten the tubes to the outside wall, when possible.
5. Seal the hole through which the cables and tubing pass.

OUTDOOR UNIT

1. Are there unusual noises or vibrations during operation?
   Explain the Following Items to the Customer (with the aid of the Owner's Manual):
2. Explain care and maintenance.
3. Present the installation instructions to the customer.

OUTDOOR UNIT DIAGNOSTIC GUIDES

For ease of service, the systems are equipped with a diagnostic code display LED on both the indoor and outdoor units. The outdoor diagnostic is displayed on the outdoor unit microprocessor board. There may be a few error codes displayed on the indoor unit that might relate to the outdoor unit's problems. If possible, always check the diagnostic codes displayed on the indoor unit first.

In standby, the LED displays "- -".

In the compressor operation, the LED displays the running frequency.

In the defrosting mode, the LED displays **"dF"** or alternative displays between the running frequency and **"dF"** (each appears for 0.5s).

During the compressor pre-heating cycle, the LED displays "**PH**" or alternative displays between the running frequency and **"PH"** (each appears for 0.5s).

During the oil return process, the LED displays **"RO"** or alternative displays between the running frequency and **"RO"** (each appears for 0.5s). In the low ambient cooling mode, the LED displays **"LC"** or alternative displays between the running frequency and **"LC"** (each appears for 0.5s).

In the forced cooling mode, the LED displays "**FC**" or alternative displays between the running frequency and **"FC"** (each appears for 0.5s). When PFC module protection occurs three times within 15 minutes, the LED displays **"E6"** or alternative displays between the running frequency and **"E6"** (each appears for 0.5s).

In protection or malfunction, the LED displays an error code or a protection code. The diagnostic codes displayed on the outdoor units are listed on Table 16.

Table 16 — Outdoor Unit Error Display

OPERATION LAMP (TIMES)	TIMER LAMP	DISPLAY	LED STATUS
1	OFF	EH 00/EH 0A	Indoor unit EEPROM parameter error
2	OFF	EL 01	Indoor/outdoor unit communication error
3	OFF	EH 02	Zero-crossing signal detection error
4	OFF	EH 03	Indoor fan operating outside of the normal range
5	OFF	EC 51	Outdoor unit EEPROM parameter error
5	OFF	EC 52	T3 is in open circuit or has short circuited
5	OFF	EC 53	T4 is in open circuit or has short circuited
5	OFF	EC 54	TP is in open circuit or has short circuited
5	OFF	EC 56	T2B is in open circuit or has short circuited
6	OFF	EH 60	T1 is in open circuit or has short circuited
6	OFF	EH 61	T2 is in open circuit or has short circuited
12	OFF	EC 07	Outdoor fan operating outside of the normal range
9	OFF	EH 0b	Indoor PCB/Display board communication error
8	OFF	EL 0C	Refrigerant leakage detection
7	FLASH	PC 00	IPM malfunction or IGBT OSCP
2	FLASH	PC 01	Over voltage or over low voltage protection
3	FLASH	PC 02	Compressor or IPM high temp/pressure protection
5	FLASH	PC 04	Inverter compressor drive error
1	FLASH	PC 08	Current overload protection
6	FLASH	PC 40	Communication error between outdoor chip and compressor chip
7	FLASH	PC 03	Low pressure protection
1	ON	--	Indoor units mode conflict
9	OFF	EH b1	Indoor board and Multi-function communication error
11	OFF	FH 0d	Ionizer malfunction

DUCTLESS START-UP CHECKLIST - SINGLE ZONE

Installation Data

Site Address:_____

City:_____ **State:**_____ **Zip Code:**_____

Installing Contractor:_____ **Contractor Contact #:** ( ) _____-_____

Job Name:_____ **Start-up Date:**_____

Distributor:_____

System Details

UNITS	MODEL NO.	SERIAL NO.	CONTROLLER
OUTDOOR UNIT			
INDOOR UNIT A			

Are the outdoor unit and indoor unit compatible? YES:_____ NO:_____

Wiring Electrical

Wire Size and Type Used? AWG:_____ TYPE:_____

Are there any breaks, splices, wire nuts or butt connectors between the outdoor unit and the indoor unit? YES:_____ NO:_____

Was the wiring from the outdoor unit port to the correct indoor unit verified? YES:_____ NO:_____

REMARKS:_____

_____

Voltage Check

Wiring: Single Zone

Outdoor Unit Disconnect	1(L1):GND		Outdoor Unit Terminal Block	1(L1):GND		**NOTES:**_____
	2(L2):GND			2(L2):GND		
	1(L1):L2(2)			1(L1):2(L2)		
Indoor Unit Voltage Check @ Outdoor Unit	1(L1):GND		Indoor Unit Voltage Check @ Indoor Unit	1(L1):GND		**NOTES:**_____
	2(L2):GND			2(L2):GND		
	1(L1):2(L2)			1(L1):2(L2)		
	2(L2):3(3)			2(L2):3(3)		

Outdoor Unit Disconnect	1(L1):GND		Outdoor Unit Terminal Block	1(L1):GND		**NOTES:**_____
	2(L2):GND			2(L2):GND		
	1(L1):L2(2)			1(L1):2(L2)		
Indoor Unit Voltage Check @ Outdoor Unit	1(L1):GND		Indoor Unit Voltage Check @ Indoor Unit	1(L1):GND		**NOTES:**_____
	2(L2):GND			2(L2):GND		
	1(L1):2(L2)			1(L1):2(L2)		
	2(L2):3(3)			2(L2):3(3)		

Manufacturer reserves the right to change, at any time, specifications and designs without notice and without obligations.

Ductless Start-Up Checklist (CONT)

Piping

Leak Check:
System held 500 psig (max. 550psi) for a minimum of 30 minutes using dry nitrogen. YES:_____ NO:_____

Evacuation Method:
- Was the Triple Evacuation Method used as outlined in the installation manual? YES:_____ NO:_____
- Was the Deep Vacuum Method used as outlined in the installation manual? YES:_____ NO:_____
- Did the System Hold 500 microns for 1 hour? YES:_____ NO:_____
- Does the line set match the diameter of the evaporator connections? YES:_____ NO:_____
- For Conventional Fan Coils, does the line set match the outdoor unit size? YES:_____ NO:_____

Single Zone Piping:
Has the liquid pipe length been measured and the additional charge calculated? Size:_____ Length:_____ Charge:_____

NOTES:

PORT	LIQUID SIZE		SUCTION SIZE		LENGTH	CHARGE
A						

NOTES:_____

Performance Check

For 1:1 Single Zone Systems: Adjust the set-point to create an operational call for the desired testing operation. Allow the system to run for a minimum of 10 min. and record the following details:

(Operational data recorded on applicable heads with the wireless remote controller's Point Check function)

UNIT	SET-POINT	MODE	T1	T2	T3	T4	Tb	Tp	Th	LA/Lr
A										

NOTE:
- T1 - Ambient Space Temperature Sensor
- T2 - IDU Coil Temperature Sensor
- T3 - Outdoor Coil Temperature Sensor
- T4 - Outdoor Ambient Temperature
- Tb - Suction Line Temperature @PMV
- Tp - Discharge Temperature Sensor
- Th - IPM Board Temperature
- LA/Lr - PMV Temperature

Error Codes

Were there any error codes present at start-up? YES:_____ NO:_____

		Notes:
Indoor Unit Error Code:		
Outdoor Unit Error Code:		
Wall Controller:		
24V Interface:		

Comments:

_____

_____

_____

© 2022 Carrier. All rights reserved.

Manufacturer reserves the right to change, at any time, specifications and designs without notice and without obligations.