FHMA5 & WCHL
Fan Coil Units for R-454B Refrigerant
Sizes 18 to 60

Installation Instructions

NOTE: Read these entire instructions before starting the installation.

Table of Contents

Table of Contents 1
Safety Considerations 1
Introduction 2
Heater Packages 2
Installation 2
Check Equipment 2
Mount Unit 2
Upflow Installation 2
Downflow Installation 3
Horizontal Installation 3
Air Ducts 6
Ductwork Acoustical Treatment 6
Electrical Connections 6
Line Voltage Connections 6
24V Control System 6
Manufactured Housing 8
Ground Connections 8
Minimum CFM and Motor Speed Selection 8
Table 1 – Fan Speed Selection 8
Refrigerant Tubing Connection and Evacuation 8
Mechanical Line Set Connections 9
Refrigerant Flow-Control Device 9
Condensate Drains 10
Leak Dissipation System 10
Leak Dissipation System Self-Test 11
Table 2 – Dissipation Board Test Button Functions 11
Table 3 – Required Operational Checks to Ensure Proper Dissipation System Function 11
Table 4 – Required Minimum Dissipation Mode Airflows, based on Total System Refrigerant Charge Quantity 12
Troubleshooting 12
Table 5 – Flash Code Chart 12
Accessories 12
Humidifier 12
Sequence of Operation 12
Continuous Fan 12
Cooling Mode 13
Heat Pump Heating with Auxiliary Electric Heat 13
Electric Heat or Emergency Heat Mode 13
Leak Dissipation Mode 13
Start-up Procedures 13
Table 6 – Charge Table 14
Care and Maintenance 14
Table 7 – Electric Heater Static Pressure Drop (in. wc) 14
Table 8 – Airflow Performance (CFM) Wet 15
Table 9 – Airflow Performance (CFM) Dry 16

Safety Considerations

Improper installation, adjustment, alteration, service, maintenance, or use can cause explosion, fire, electrical shock, or other conditions which may cause death, personal injury or property damage. Consult a qualified installer, service agency, or your distributor or branch for information or assistance. The qualified installer or agency must use factory-authorized kits or accessories when modifying this product. Refer to the individual instructions packaged with kits or accessories when installing.

Follow all safety codes. Wear safety glasses, protective clothing and work gloves. Have a fire extinguisher available. Read these instructions thoroughly and follow all warnings or cautions included in literature and attached to the unit. Consult local building codes and the current editions of the National Electrical Code (NEC) NFPA 70.

In Canada, refer to the current editions of the Canadian Electrical Code CSA C22.1.

Recognize safety information. This is the safety-alert symbol ⚠. When you see this symbol on the unit and in instruction manuals, be alert to the potential for personal injury.

Understand the signal words **DANGER**, **WARNING**, and **CAUTION**. These words are used with the safety-alert symbol. **DANGER** identifies the most serious hazards which **will** result in severe personal injury or death. **WARNING** signifies hazards which **could** result in personal injury or death. **CAUTION** is used to identify unsafe practices which **may** result in minor personal injury or product and property damage. **NOTE** is used to highlight suggestions which **will** result in enhanced installation, reliability, or operation.

⚠ WARNING

PROPERTY OR PERSONAL INJURY HAZARD

Risk of fire. Flammable refrigerant used.

To be repaired only by trained service personnel. Do not puncture refrigerant tubing.

Auxiliary devices which may be ignition sources shall not be installed in the ductwork, other than auxiliary devices listed for use with the specific appliance. See instructions.

Dispose of refrigerant properly in accordance with federal or local regulations.

Failure to follow proper R-454B mitigation system installation instructions can result in property damage, personal injury, or death. If any fault codes are listed, please troubleshoot to prevent system malfunction.

⚠ WARNING

PERSONAL INJURY / PROPERTY DAMAGE HAZARD

Failure to follow this warning could result in property damage, personal injury, or death.

For continued performance, reliability, and safety, the only approved accessories and replacement parts are those specified by the equipment manufacturer. The use of non-manufacturer approved parts and accessories could invalidate the equipment limited warranty and result in fire risk, equipment malfunction, and failure. Please review manufacturer's instructions and replacement part catalogs available from your equipment supplier.

⚠ WARNING

ELECTRICAL OPERATION HAZARD

Failure to maintain proper clearances could result in personal injury or death.

Before installing or servicing unit, always turn off all power to unit. There may be more than 1 disconnect switch. Turn off accessory heater power if applicable.

⚠ CAUTION

CUT HAZARD

Failure to follow this caution may result in personal injury.

Sheet metal parts may have sharp edges or burrs. Use care and wear appropriate protective clothing, safety glasses and gloves when handling parts.

⚠ CAUTION

HOT TUBE WARNING

Failure to follow this caution could result in personal injury and/or property damage.

Refrigerant lines can reach or exceed 130 °F (54 °C). Avoid contact with the vapor header or vapor line, especially in Heating Mode. Do not service A2L refrigerant fan coils while these components are hot to avoid risk of ignition source.

Introduction

These Fan Coils are designed for installation flexibility. The units leave the factory compliant with low leak requirements of less than 2% cabinet leakage rate at 1.0 inches W.C. and 1.4% cabinet leakage rate at 0.5 inches W.C. when tested in accordance with ASHRAE 193 standard.

All these fan coils use a multi-tap ECM motor for efficiency. The units have be designed for upflow, downflow (kit required), and horizontal orientations, including manufactured and mobile home applications.

IMPORTANT: These units are designed specifically for R-454B refrigerant and must be used only with R-454B refrigerant air conditioners and heat pumps as shipped.

IMPORTANT: This unit MUST be installed in a location that is LOWER than 600 meters above sea level. These units are available for systems of 18,000 through 60,000 BTUh nominal cooling capacity. See Product Data literature for all available accessory kits.

Heater Packages

NOTE: Some heater sizes may require the removal of two screws which connect the blower housing to the fan deck (removal will not impact performance). See (Care and Maintenance on p14) and Fig. 24.

For units not equipped with factory-installed heat, a factory-approved, field-installed, UL listed heater package is available from your equipment supplier. See unit rating plate for a list of factory-approved heaters. Heaters that are not factory approved could cause damage which would not be covered under the equipment warranty. If fan coil contains a factory-installed heater package, minimum circuit ampacity (MCA) and maximum fuse/breaker may be different than units with a same size field-installed accessory heater. The differences is not an error and is due to calculation difference per UL guidelines.

Installation

Check Equipment

Unpack unit and move to final location. Remove carton taking care not to damage unit.

NOTE: If the door gasket is damaged or missing, the unit may not meet the ASHRAE 193 standard for cabinet air leakage. See the Product Data for this model or contact your supplier to order the gasket kit.

Inspect equipment for damage prior to installation. File claim with shipping company if shipment is damaged or incomplete. Locate unit rating plate which contains proper installation information. Check rating plate to be sure unit matches job specifications.

Mount Unit

Unit can stand or lie on floor, or hang from ceiling or wall. Allow space for wiring, piping, and servicing unit.

The indoor equipment and pipes shall be securely mounted and guarded such that accidental rupture of equipment cannot occur from such events as moving furniture or reconstruction activities. When a Fresh Air Ventilator (HRV or ERV) is used, the air extraction opening from the room shall be located equal to or below the top of the unit. For floor mounted units, it shall be as low as practicable. The air extraction openings shall be located in a sufficient distance, BUT NOT LESS THAN 3ft 4in (3 m), from the air intake openings to prevent re-circulation to the space. When a Fresh Air Ventilator (HRV or ERV) is used, the lower edge of the air extraction opening where air is exhausted from the room SHALL NOT be more than 4in (100 mm) above the floor.

IMPORTANT: When unit is installed over a finished ceiling and/or living area, building codes may require a field-supplied secondary condensate pan to be installed under the entire unit. Some localities may allow as an alternative, the running of a separate, secondary condensate line. Consult local codes for additional restrictions or precautions.

Nuisance sweating may occur if the unit is installed in a high humidity environment with low airflow.

Upflow Installation

If return air is to be ducted through a floor, set unit on floor over opening and use 1/8" to ¼" (3 to 6 mm) thick fireproof resilient gasket between duct, unit, and floor.

Side return is a field option on slope coil models. Cut opening per dimensions (Fig. 2). A field-supplied bottom closure is required.

Modular Units

Modular units (3½, 4, and 5 ton) can be disassembled and components moved separately to the installation area for reassembly. This process accommodates small scuttle holes and limiting entrances to installation sites (Fig. 1).

To disassemble the unit, disconnect the 4-pin sensor wire harness at the dissipation board and undo the wire routing in the cabinet. Remove the rear corner brackets by removing 2 screws which secure the brackets. Remove either 2 screws in each front corner of the coil box, or 2 screws in the blower box. **Do not** remove all 4 screws in each corner. Sections may now be separated by lifting the top section from the lower section.

To reassemble, reverse above procedure. Be certain to reinstall all fasteners when reassembling.

Manufactured and Mobile Home Housing Applications

1. Secure the fan coil to the structure using field-supplied hardware.
2. Allow a minimum of 24" (610 mm) clearance from access panels.
3. Recommended method of securing for typical applications:
   a. If fan coil is away from wall, attach pipe strap to top of fan coil using no. 10 self-tapping screws. Angle strap down and away from back of fan coil, remove all slack, and fasten to wall stud of structure using 5/16" lag screws. Typical both sides of fan coil.
   b. If fan coil is against wall, secure fan coil to wall stud using 1/8" (3 mm) thick right-angle brackets. Attach brackets to fan coil

using no. 10 self-tapping screws and to wall stud using 5/16" lag screws (Fig. 1).

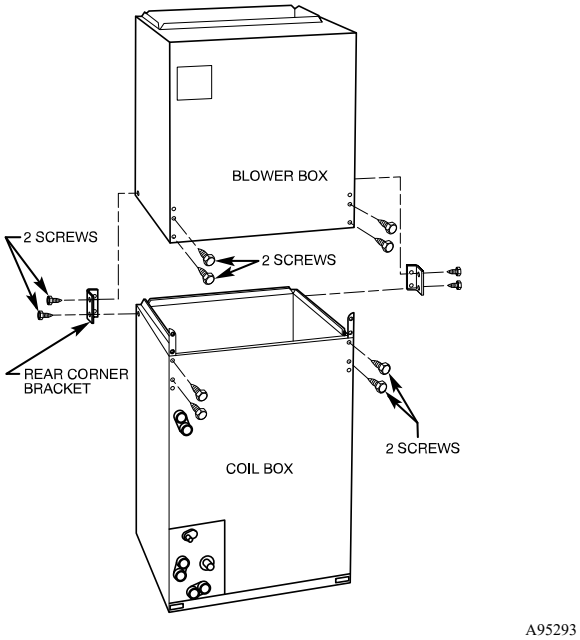

Fig. 1 – Removal of Brackets on Modular Unit

Downflow Installation

In this application, field conversion of the evaporator is required using accessory downflow kit along with an accessory base kit. Use fireproof resilient gasket, 1/8" to ¼" (3 to 6 mm) thick, between duct, unit, and floor.

NOTE: To convert units for downflow applications, refer to Installation Instructions supplied with kit for proper installation. See the Product Data or contact your supplier for the kit number. Use fireproof resilient gasket, 1/8" to ¼" (3 to 6 mm) thick, between duct, unit, and floor.

NOTE: A gasket kit is also required for all downflow applications to maintain low air leak/low sweat performance. See the Product Data or contact your supplier for the kit number.

⚠ CAUTION

PRODUCT OR PROPERTY DAMAGE HAZARD

Failure to follow this warning caution may result in product or property damage.

The conversion of the fan coil to downflow requires special procedures for the condensate drains on both A-coil and Slope-coil units. The vertical drains have an overflow hole between the primary and secondary drain holes. This hole is plugged for all applications except downflow, and must be used for downflow. During conversion process, remove plastic cap covering vertical drains only and discard. Remove plug from overflow hole and discard. At completion of downflow installation, caulk around vertical pan fitting to door joint to retain low air leak performance of the unit.

Horizontal Installation

Units must not be installed with access panels facing up or down. All other units are factory built for horizontal left installation (Fig. 3 and Fig. 4). When suspending unit from ceiling, dimples in casing indicate suitable location of screws for mounting metal support straps (Fig. 3).

For horizontal applications having high return static and humid return air, the Water Management Kit may need to be used to assist in water management. See the Product Data or contact your supplier for the kit number.

NOTE: Modular units can be disassembled and components moved separately to installation area for reassembly. This process accommodates small scuttle holes and limiting entrances to installation sites (Fig. 8).

⚠ CAUTION

PROPERTY DAMAGE HAZARD

Failure to follow this caution may result in product or property damage.

For optimum condensate drainage performance in horizontal installations, unit should be leveled along its length and width.

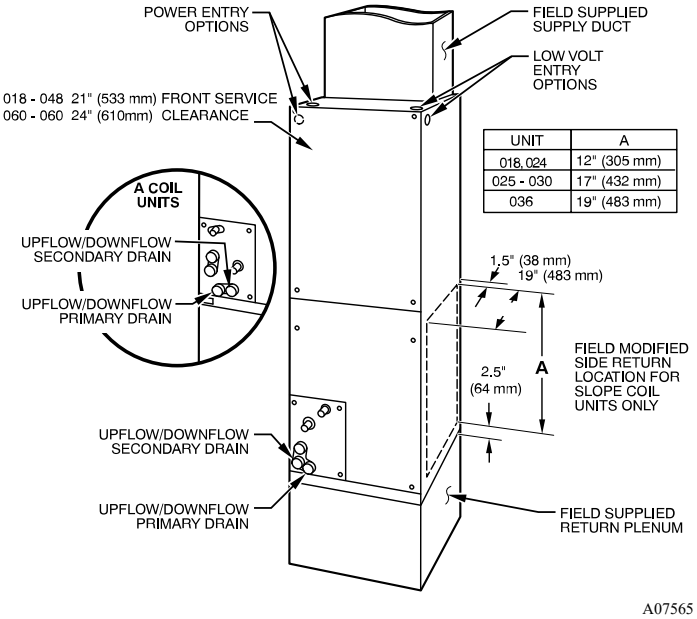

UNIT	A
018, 024	12" (305 mm)
025 - 030	17" (432 mm)
036	19" (483 mm)

Fig. 2 – Slope Coil Unit in Upflow Application

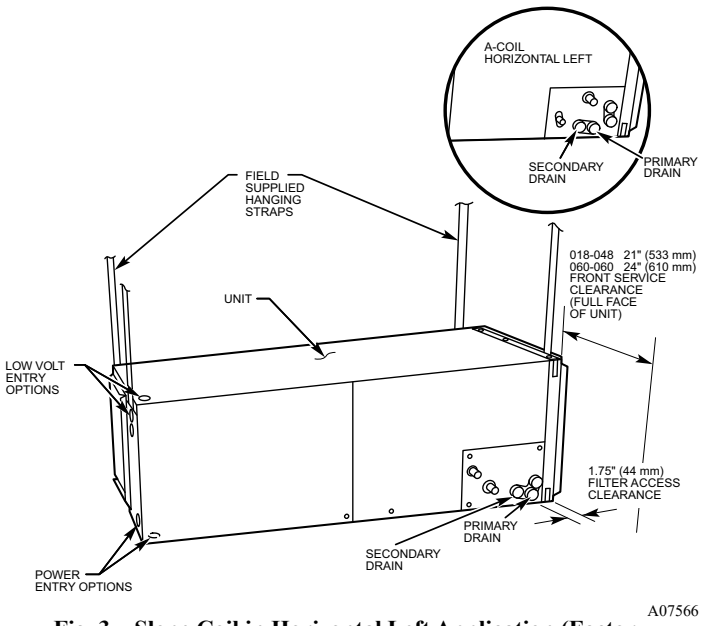

Fig. 3 – Slope Coil in Horizontal Left Application (Factory Configuration)

Horizontal Right Conversion of Units with Slope Coils

NOTE: A gasket kit is required for horizontal slope coil conversion to maintain low air leak/low sweat performance. See the Product Data or contact your supplier for the kit number.

1. Remove blower and coil access panels and fitting panel (Fig. 6).
2. Disconnect sensor on drain pan and cut wire tie securing sensor harness to the coil.
3. Undo sensor wire routing and place entire harness in the control box.
4. Remove coil mounting screw securing coil assembly to right side casing flange.
5. Remove coil assembly.
6. Lay fan coil on its right side and reinstall coil assembly with condensate pan down (Fig. 5).
7. Attach coil to casing flange using previously removed coil mounting screw.
8. Reconnect sensor wire harness by following routing shown (Fig. 5).

IMPORTANT: Sensor must be installed with the connector facing down or facing horizontally. Sensor should never be positioned with connector facing upward. Incorrect sensor position could result in premature failure.

9. Make sure pan cap in fitting door is properly seated on fitting door to retain low air leak rating of the unit.
10. Add gaskets from kit.
11. Align holes with tubing connections and condensate pan connections. Reinstall access panels and fitting panel.
12. Make sure liquid and suction tube grommets are in place to prevent air leaks and cabinet sweating. Install grommets after brazing.

Horizontal Right Conversion of Units with A-Coils

1. Remove blower and coil access panels (Fig. 6).
2. Disconnect and remove sensor on delta plate and install on horizontal drain pan clip (Fig. 18).

IMPORTANT: Sensor must be installed with the connector facing down or facing horizontally. Sensor should never be positioned with connector facing upward. Incorrect sensor position could result in premature failure.

3. Undo sensor wire harness routing and place entire harness in the control box.
4. Remove metal clip securing fitting panel to condensate pan. Remove fitting panel.
5. Remove 2 snap-in clips securing A-coil in unit.
6. Slide coil and pan assembly out of unit.
7. Remove horizontal drain pan support bracket from coil support rail on left side of unit and reinstall on coil support rail on right side of unit (Fig. 7).
8. Convert air seal assembly for horizontal right.
   a. Remove air seal assembly from coil by removing 4 screws (Fig. 6).
   b. Remove air splitter (B) from coil seal assembly by removing 3 screws (Fig. 6 inset).
   c. Remove filler plate (A) and install air splitter (B) in place of filler plate.
   d. Install filler plate (A) as shown in horizontal right application.
   e. Remove condensate troughs (C) and install on opposite tube sheets.
   f. Install hose onto plastic spout.
9. Install horizontal pan on right side of coil assembly.
10. Slide coil assembly into casing. Be sure coil bracket on each corner of vertical pan engages coil support rails.
11. Reinstall 2 snap-in clips to correctly position and secure coil assembly in unit. Be sure clip with large offsets is used on right side of unit to secure horizontal pan.
12. Remove two oval fitting caps from left side of the coil, access panel, and fitting panel.
13. Remove insulation knockouts on right side of coil access panel.
14. Remove 2 oval coil access panel plugs and reinstall into holes on left side of coil access panel and fitting panel.
15. Install condensate pan fitting caps (from Step 12) in right side of coil door making sure that cap snaps and seats cleanly on back side of the coil door. Make sure no insulation interferes with seating of cap.
16. Reinstall access and fitting panels, aligning holes with tubing connections and condensate pan connections. Be sure to reinstall metal clip between fitting panel and vertical condensate pan.
17. Make sure liquid and suction tube grommets are in place to prevent air leaks and cabinet sweating.

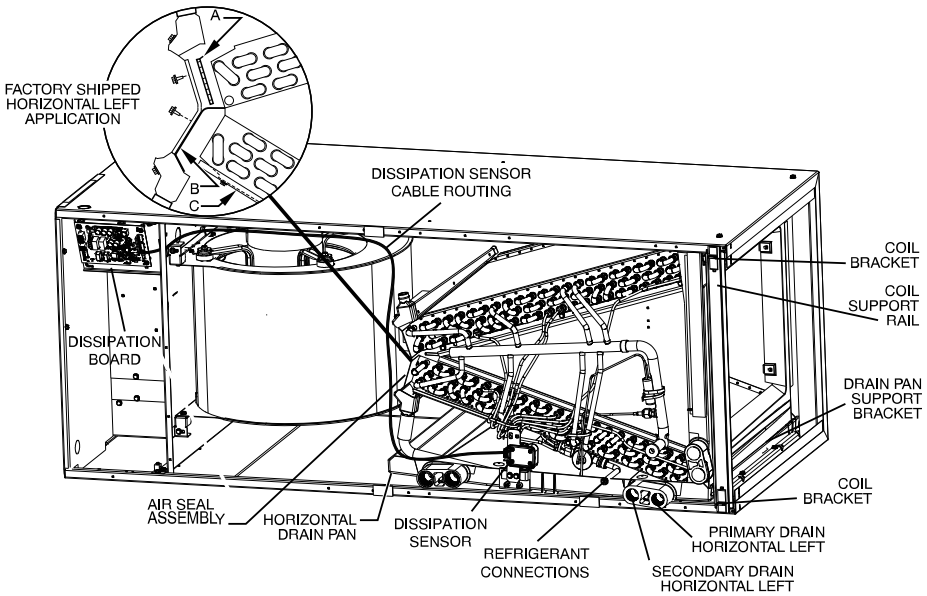

A230497

Fig. 4 – A-Coil in Horizontal Left Application (Factory Configuration)

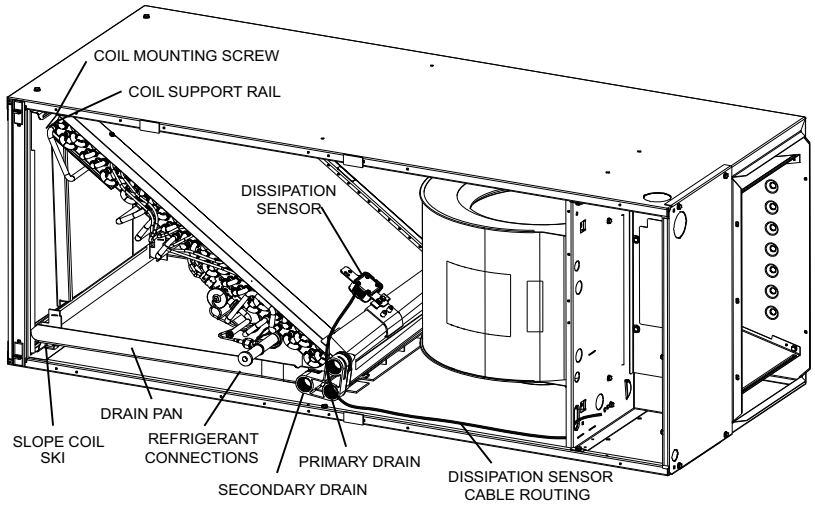

A230499

Fig. 5 – Conversion for Horizontal Right Applications - Slope Coil

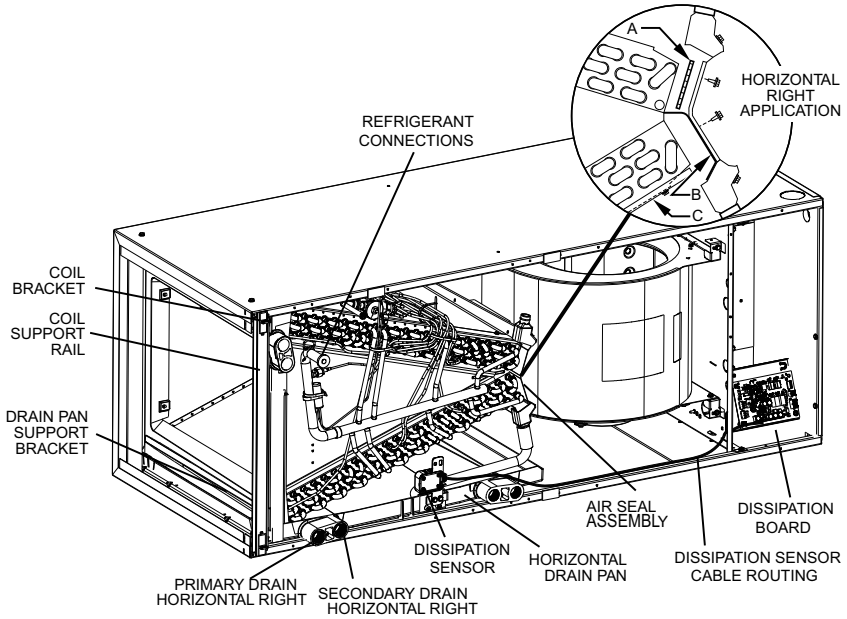

A230498

Fig. 6 – Conversion for Horizontal Right Applications - A-Coil

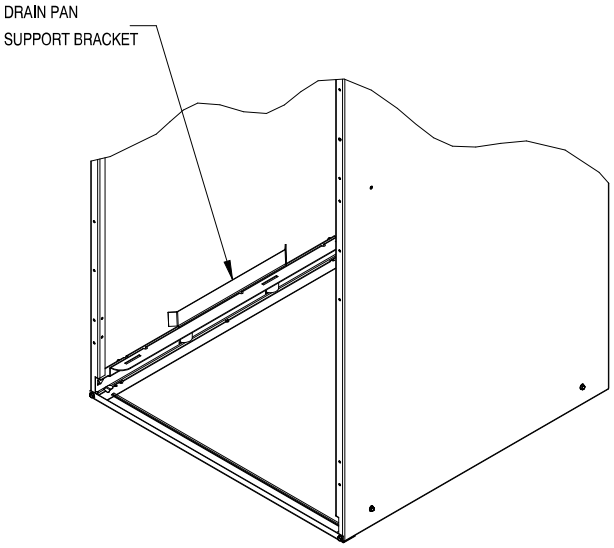

A07571

Fig. 7 – Drain Pan Support Bracket

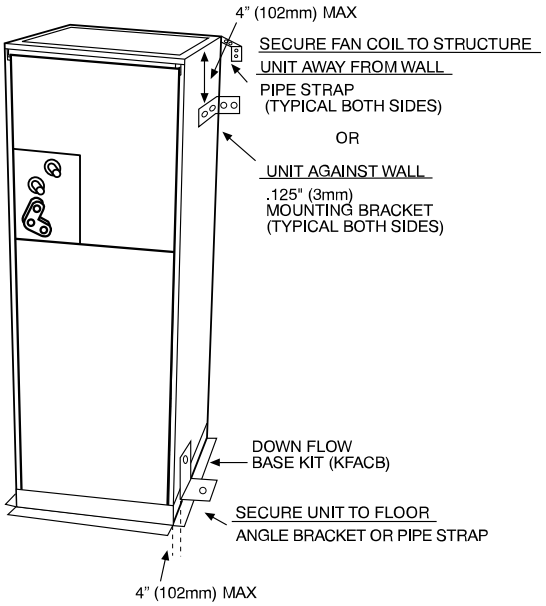

A07567

Fig. 8 – Mobile Home or Manufactured Housing Applications

Air Ducts

Connect supply-air duct over the outside of ¾" (19 mm) flanges provided on supply-air opening. Secure duct to flange, using proper fasteners for type of duct used, and seal duct-to-unit joint. If return-air flanges are required, install factory-authorized accessory kit.

Use flexible connectors between ductwork and unit to prevent transmission of vibration. When electric heater is installed, use heat-resistant material for flexible connector between ductwork and unit at discharge connection. Ductwork passing through unconditioned space must be insulated and covered with vapor barrier.

Units equipped with 20-30kW electric heaters require a 1" (25 mm) clearance to combustible materials for the first 36" (914 mm) of supply duct. All 18,000 BTU units equipped with 8 or 10 kW electric heaters require a 1" (25.4 mm) clearance to combustible materials for the first 12" of supply duct.

If the appliance is connected via an air duct system to one or more rooms, the supply and return air shall be directly ducted to the space. Open areas such as false ceilings shall not be used as a return air duct. Any auxiliary devices installed in the ductwork should be approved by the manufacturer or declared suitable with the R-454B refrigerant.

⚠ WARNING

EXPLOSION AND PERSONAL HEALTH HAZARD

Failure to follow this warning could result in personal injury, death, and/or unit damage.

Ensure to keep any required ventilation openings clear of obstruction.

Air ducts connected to the appliance shall not contain a POTENTIAL IGNITION SOURCE.

Auxiliary devices which may be a POTENTIAL IGNITION SOURCE shall not be installed in the duct work. Examples of such POTENTIAL IGNITION SOURCES are hot surfaces with a temperature exceeding 1292°F (700°C) and electric switching devices. Ensure only manufacturer approved auxiliary devices are installed.

Ductwork Acoustical Treatment

Metal duct systems that do not have a 90° elbow and 10 feet of main duct before first branch takeoff may require internal acoustical insulation lining. As an alternative, fibrous ductwork may be used if constructed and installed in accordance with the latest edition of SMACNA construction standard on fibrous glass ducts. Both acoustical lining and fibrous ductwork shall comply with National Fire Protection Association as tested by UL Standard 181 for Class 1 air ducts.

Electrical Connections

Units from the factory protect the low voltage circuit with a 3A automotive type fuse in-line on the wire harness. Motor speeds and time delay function are built into the motor. See (Minimum CFM and Motor Speed Selection on p8) for clarification.

When a factory-approved accessory control package has been installed, check all factory wiring per unit wiring diagram and inspect factory wiring connections to be sure none were loosened during transit or installation. If a different control package is required, see unit rating plate.

Before proceeding with electrical connections, make certain that supply voltage, frequency, phase, and ampacity are as specified on the unit rating plate. See unit wiring label for proper field high- and low-voltage wiring. Make all electrical connections in accordance with the NEC and any local codes or ordinances that may apply. Use copper wire only.

The unit must have a separate branch electric circuit with a field-supplied disconnect switch located within sight from, and readily accessible from, the unit.

On units with a factory-installed disconnect with pull-out removed, service and maintenance can be safely performed on only the load side of the control package.

⚠ CAUTION

Units may contain plastic plugs for the high and low voltage electrical connections. These plugs should only be removed when these ports are used for install or servicing and should be discarded after removal.

⚠ WARNING

PERSONAL OR EQUIPMENT DAMAGE HAZARD.

Failure to follow this warning could result in personal injury, death, and/or unit damage.

Provide training to installation personnel to follow national and local electrical codes.

⚠ WARNING

ELECTRICAL SHOCK OR UNIT DAMAGE HAZARD

Failure to follow this warning could result in personal injury, death, and/or unit damage.

If a disconnect switch is to be mounted on unit, select a location where drill and fasteners will not contact electrical or refrigeration components.

⚠ WARNING

ELECTRICAL SHOCK HAZARD

Failure to follow this warning could result in personal injury or death.

Field wires on the line side of the disconnect found in the fan coil unit remain live, even when the pull-out is removed. Service and maintenance to incoming wiring cannot be performed until the main disconnect switch (remote to the unit) is turned off.

Line Voltage Connections

If unit contains an accessory electric heater, remove and discard power plug from fan coil and connect male plug from heater to female plug from unit wiring harness. (See Electric Heater Installation Instructions.)

For units without electric heat:

1. Connect 208/230V power leads from field disconnect to yellow and black stripped leads.
2. Connect ground wire to unit ground lug.

NOTE: Units installed without electric heat should have a field-supplied sheet metal block-off plate covering the heater opening. This will reduce air leakage and formation of exterior condensation.

24V Control System

Connection To Unit

Wire low voltage in accordance with wiring label on the blower (Fig. 9 thru Fig. 12). Use #18 AWG color-coded, insulated (35° C minimum) wire to make the low-voltage connections between the thermostat, the unit, and the outdoor equipment. If the thermostat is located more than 100' (30 m) from the unit (as measured along the low-voltage wire), use #16 AWG color-coded, insulated (35° C minimum) wire. All wiring must be NEC Class 1 and must be separated from incoming power leads.

Refer to outdoor unit wiring instructions for any additional wiring procedure recommendations.

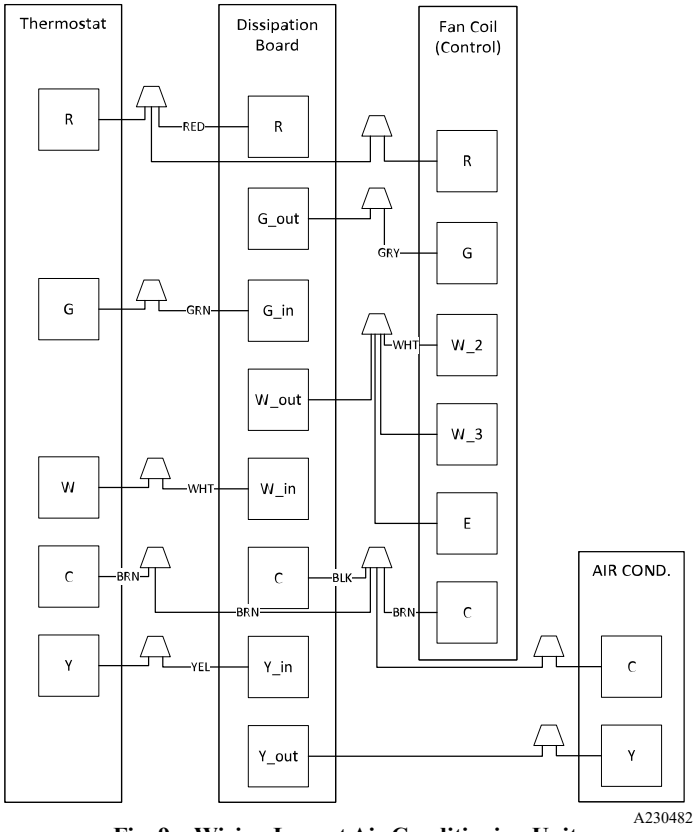

Fig. 9 – Wiring Layout Air Conditioning Unit (Cooling Only)

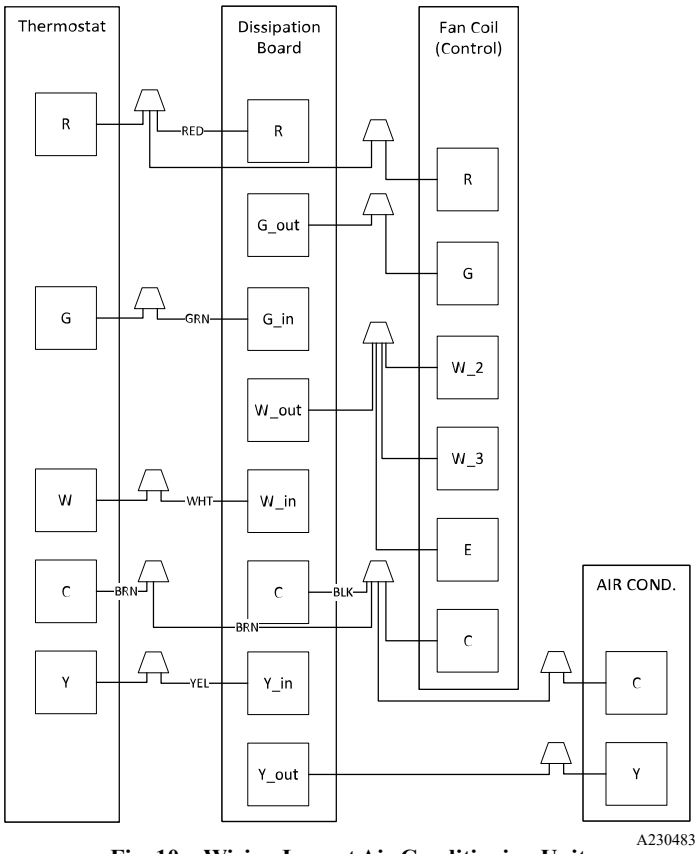

Fig. 10 – Wiring Layout Air Conditioning Unit (Cooling and 1-Stage Heat)

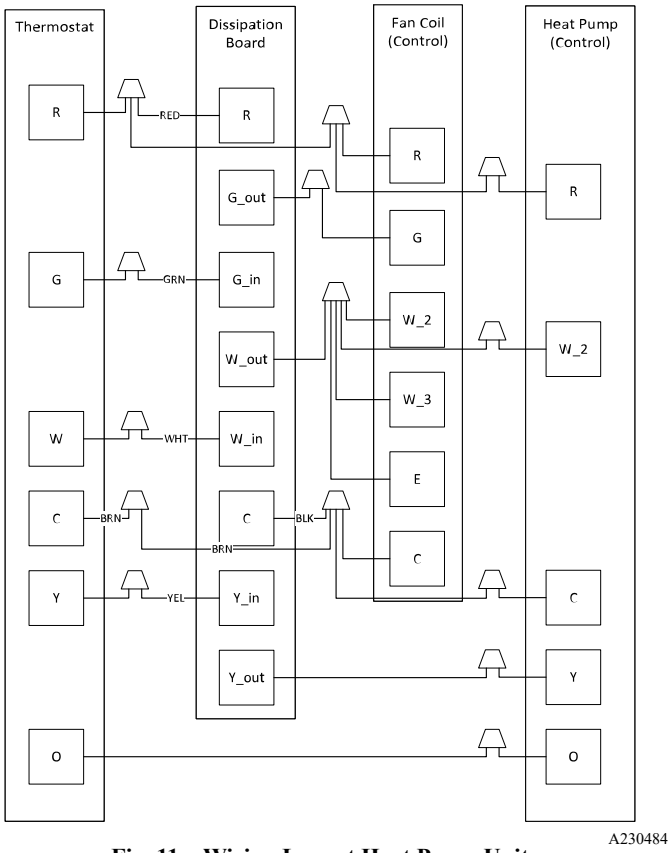

Fig. 11 – Wiring Layout Heat Pump Unit (Cooling and 2-Stage Heat with No Outdoor Thermostat)

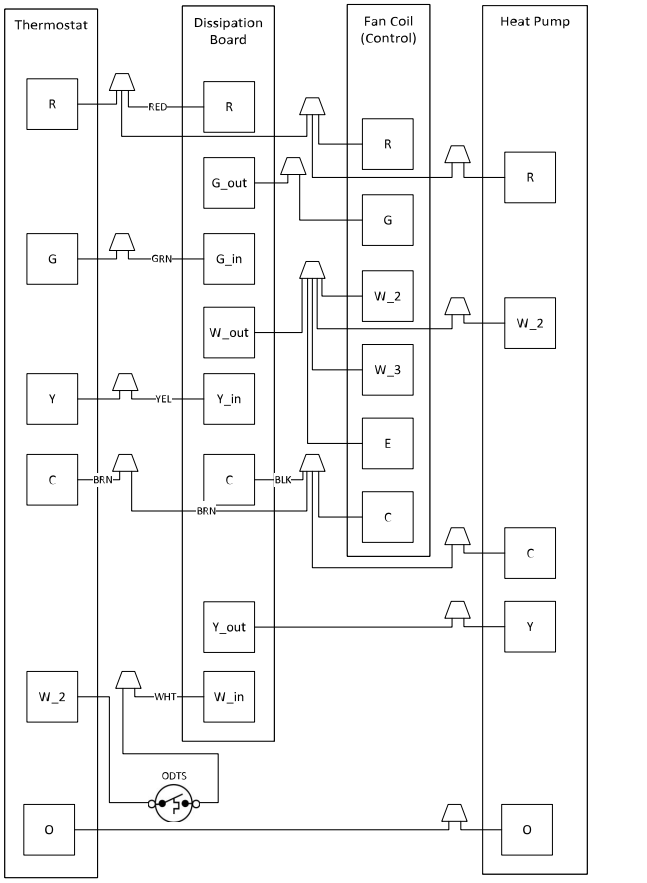

Fig. 12 – Wiring Layout Heat Pump Unit (Cooling and 2-Stage Heat for Manufactured Housing)

Transformer Information

The transformer is factory wired for 230V operation. For 208V applications, disconnect the black wire from the 230V terminal on transformer and connect it to the 208V terminal (Fig. 13).

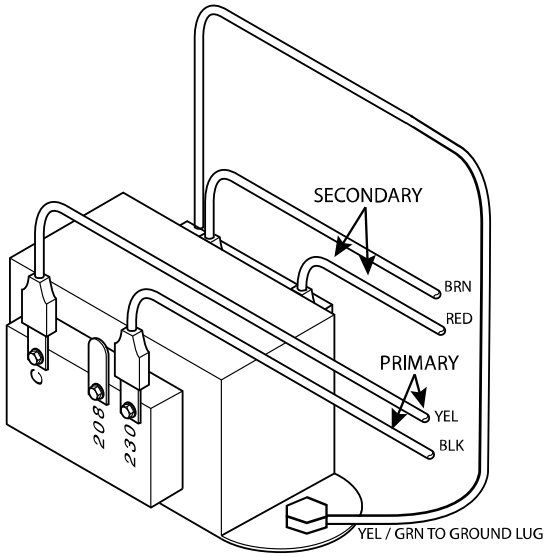

A05182A

Fig. 13 – Transformer Connections

Heater Staging

If electric heat staging is required, a multi-stage heating room thermostat is required. Consult your equipment supplier for a suitable thermostat.

Manufactured Housing

In manufactured housing applications, the Code of Federal Regulations, Title 24, Chapter XX, Part 3280.714 requires that supplemental electric heat be locked out at outdoor temperatures above 40° F (4° C), except for a heat pump defrost cycle. See Fig. 12 for typical low voltage wiring with outdoor thermostat.

Ground Connections

NOTE: Use UL listed conduit and conduit connectors for connecting supply wire(s) to unit to obtain proper grounding. Grounding may also be accomplished by using grounding lugs provided in control box.

⚠ WARNING

ELECTRICAL SHOCK HAZARD

Failure to establish uninterrupted or unbroken ground could result in personal injury and/or death.

According to NEC, NFPA 70, and local codes, the cabinet must have an uninterrupted or unbroken ground to minimize personal injury if an electrical fault should occur. The ground may consist of electrical wire or metal conduit when installed in accordance with existing electrical codes. If conduit connection uses reducing washers, a separate ground wire must be used.

Minimum CFM and Motor Speed Selection

The fan speed selection is done at the motor connector. Units with or without electric heaters require a minimum CFM. Refer to the unit wiring label to ensure that the fan speed selected is not lower than the minimum fan speed indicated.

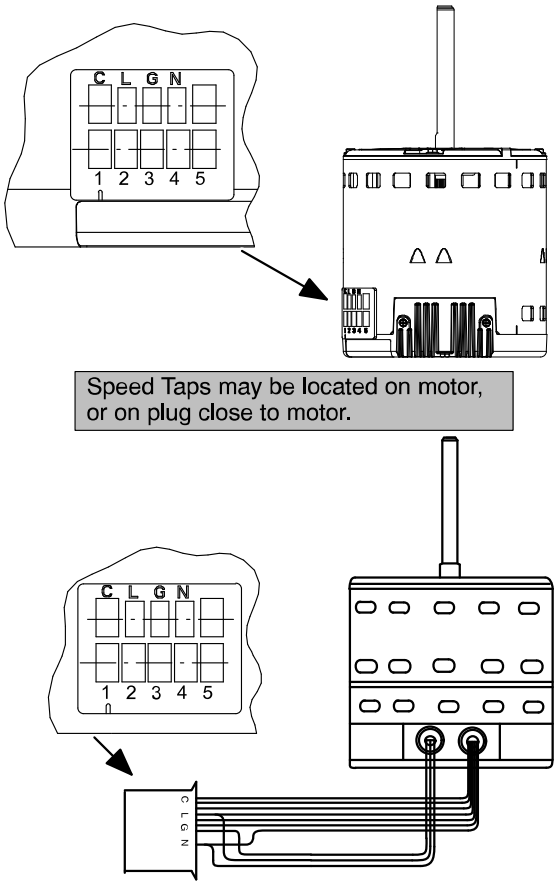

A11048

Fig. 14 – Motor Speed Selection

Table 1 – Fan Speed Selection

Tap 1	Low	90 sec off delay
Tap 2	Medium	90 sec off delay
Tap 3	High	90 sec off delay
Tap 4	Electric heat †	0 sec off delay
Tap 5	Max ‡	0 sec off delay

† electric heat airflow is same CFM as Tap 3, except 0 sec off delay
‡ high static applications, see airflow tables for max airflow

To change motor speeds disconnect the BLUE fan lead from motor connector terminal #2 (factory default position) and move to desired speed-tap; 1, 2, 3, or 5.

Speed-taps 1, 2, and 3 have a 90 second blower off time delay pre-programmed into the motor. Speed-tap 4 is used for electric heat only (with 0 second blower time delay) and the WHITE wire should remain on tap 4. Speed-tap 5 is used for high static applications, but has a 0 second blower time delay pre-programmed into the motor. See Airflow Performance tables for actual CFM. Se Fig. 14 for motor speed selection location.

NOTE: In low static applications, lower motor speed tap should be used to reduce possibility of water being blown off coil.

Refrigerant Tubing Connection and Evacuation

Use accessory tubing package or field-supplied tubing of refrigerant grade. Suction tube must be insulated. Do not use damaged, dirty, or contaminated tubing because it may plug refrigerant flow-control device. ALWAYS evacuate the coil and field-supplied tubing to 500 microns before opening outdoor unit service valves.

⚠ CAUTION

PRODUCT DAMAGE HAZARD

Failure to follow this caution may result in product or property damage.

A brazing shield MUST be used when tubing sets are being brazed to the unit connections to prevent damage to the unit surface and condensate pan fitting caps.

Units have sweat suction and liquid tube connections. Make suction tube connection first.

IMPORTANT: Federal regulations require that you do not vent refrigerant to the atmosphere. Recover during system repair or final unit disposal.

- Run refrigerant tubes as directly as possible by avoiding unnecessary turns and bends.
- Make provision for expansion and contraction of long piping runs.
- Protect piping and fittings as much as possible against adverse environmental effects; for example, the danger of water collecting and freezing in relief pipes or the accumulation of dirt and debris.
- Install piping to reduce the likelihood of hydraulic shock damaging the system.
- Always use certified steel piping and components to protect against corrosion.
- Protect flexible pipe elements against mechanical damage and excessive stress by torsion or other forces. Check flexible pipes for mechanical damage annually.

1. Cut tubing to correct length.
2. Insert tube into sweat connection on unit until it bottoms.
3. All fittings need to withstand 700 PSIG (Mechanical Fittings or Brazing). When brazing, use silver bearing or non-silver bearing brazing material. Do not use solder (materials which melt below 800° F / 427° C). Consult local code requirements.
4. Perform a pressure check of the unit with a nitrogen charge of about 200psi. The Nitrogen holding charge must not decrease in pressure for 1 hour.
5. Perform leak check on the unit. Vacuum unit to 500 microns. When isolating the unit from the pump, the pressure shall not rise above 1500 microns in 10 minutes.

Mechanical Line Set Connections

If using mechanical or crimp-type line set connections, follow crimp tool manufacturer's instructions.

NOTE: Should the use of mechanical fittings cause failure of the fittings or failure of the equipment, such would not be covered under the standard warranty.

⚠ CAUTION

PRODUCT DAMAGE HAZARD

Failure to follow this caution may result in product or property damage.

Wrap a wet cloth around rear of fitting to prevent damage to TXV and factory-made joints.

Refrigerant Flow-Control Device

The 18-60 size units come equipped with an R-454B refrigerant mechanical TXV. When tightening nuts on a TXV, do not exceed 20 ft-lbs.

Always use outdoor units designed to match indoor fan coil applications.

⚠ CAUTION

PRODUCT OPERATION HAZARD

Failure to follow this caution may result in improper product operation.

If using a TXV in conjunction with a single-phase reciprocating compressor, a compressor start capacitor and relay are required. Consult outdoor unit pre-sale literature for start assist kit part number.

Disassembly

⚠ WARNING

PERSONAL INJURY HAZARD

Failure to follow this warning could result in personal injury.

Remove refrigerant charge from system and ensure there is no pressure before servicing the TXV.

NOTE: For Item #1 (Fig. 15): Use an adjustable wrench with a backup adjustable wrench to loosen the brass nut (TXV outlet). Then use both wrenches to loosen Item # 2 (TXV inlet).

1. Use an adjustable wrench with a backup adjustable wrench to loosen Item # 3 (TXV equalizer line).
2. For Item #4 - Cut the wire tie and remove the black insulation. Remove the band from around the TXV bulb.
3. Cut the wire tie that holds the TXV equalizer line and bulb from the aluminum vapor header tube.
4. Remove 2 screws from the TXV bracket. Remove the TXV from the coil unit.

Assembly

1. Mount the TXV bracket and TXV with the 2 screws removed during disassembly.
2. Connect Items #1 and #2 (TXV outlet and inlet respectively) and use an adjustable wrench with a backup wrench to tighten each nut. Tighten to between 10 and 20 ft-lbs.
3. Connect Item #3 and use an adjustable wrench with a backup adjustable wrench to tighten the flare nut. Tighten to approximately 12 ft-lbs.
4. Item # 4 - Reconnect the TXV bulb with a clamp and reinstall insulation around the TXV bulb and vapor tube.

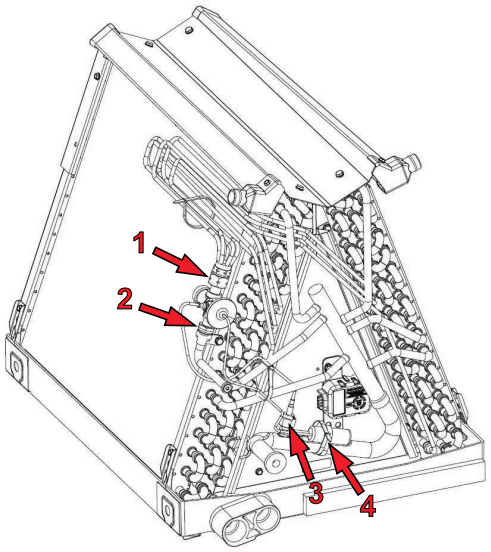

A230489

Fig. 15 – Mechanical TXV Removal

⚠ CAUTION

UNIT DAMAGE HAZARD

Failure to follow this Caution may result in unit damage.

Failure to place insulation between copper tubes and aluminum parts will lead to galvanic corrosion, which will result in a refrigerant leak in the future.

5. Use a wire tie to mount the 1/8" TXV equalizer and bulb tubes to the vapor header tube. **Make sure that there is insulation between the aluminum vapor tube and copper tube.**
6. Leak test the TXV fittings, then evacuate and charge the system to the required subcooling per the outdoor unit rating plate.

Condensate Drains

To connect drains, the cap openings must be removed. Use a knife to start the opening near the tab and using pliers, pull the tab to remove the disk. Clean the edge of the opening if necessary and install the condensate line. Finally caulk around the lines where they exit the fitting to retain the low leak rating of the unit.

Units are equipped with primary and secondary ¾" FPT drain connections. For proper condensate line installations see Fig. 2 thru Fig. 6. To prevent property damage and achieve optimum drainage performance, BOTH primary and secondary drain lines should be installed and include properly-sized condensate traps (Fig. 16 and Fig. 21). Factory-approved condensate traps are available. It is recommended that PVC fittings be used on the plastic condensate pan. Finger-tighten plus 1-1/2 turns. Do not over-tighten. Use pipe dope.

NOTE: Do not use CPVC in field drain lines due to potential reaction with POE oil.

NOTE: When connecting condensate drain lines, avoid blocking filter access panel, thus preventing filter removal. After connection, prime both primary and secondary condensate traps.

⚠ CAUTION

PRODUCT DAMAGE HAZARD

Failure to follow this caution may result in product or property damage.

Use only full size P-traps in the condensate line (Fig. 16). Shallow running traps are inadequate and DO NOT allow proper condensate drainage (Fig. 17).

⚠ CAUTION

UNIT OR PROPERTY DAMAGE HAZARD

Failure to follow this warning caution may result in product or property damage.

The conversion of the fan coil to downflow requires special procedures for the condensate drains on both A-coil and Slope-coil units. The vertical drains have an overflow hole between the primary and secondary drain holes. This hole is plugged for all applications except downflow, and must be used for downflow. During conversion process, remove plastic cap covering vertical drains only and discard. Remove plug from overflow hole and discard. At completion of downflow installation, caulk around vertical pan fitting to door joint to retain low air leak performance of the unit.

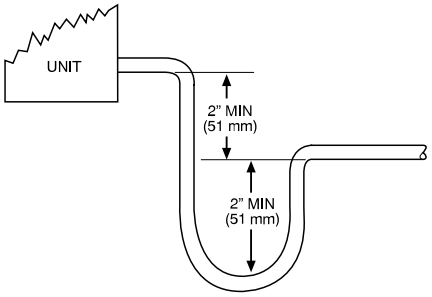

A03002

Fig. 16 – Recommended Condensate Trap

A03013

Fig. 17 – Insufficient Condensate Trap

NOTE: If unit is located in or above a living space where damage may result from condensate overflow, a field-supplied, external condensate pan should be installed underneath the entire unit, and a secondary condensate line (with appropriate trap) should be run from the unit into the pan. Any condensate in this external condensate pan should be drained to a noticeable place. As an alternative to using an external condensate pan, some localities may allow the use of a separate ¾" (19 mm) condensate line (with appropriate trap) to a place where the condensate will be noticeable. The owner of the structure must be informed that when condensate flows from the secondary drain or external condensate pan, the unit requires servicing or water damage will occur.

Install traps in the condensate lines as close to the coil as possible. (Fig. 21). Make sure that the outlet of each trap is below its connection to the condensate pan to prevent condensate from overflowing the drain pan. Prime all traps, test for leaks, and insulate traps if located above a living area. Condensate drain lines should be pitched downward at a minimum slope of 1" (25 mm) for every 10' (3 m) of length. Consult local codes for additional restrictions or precautions.

Leak Dissipation System

⚠ WARNING

PERSONAL INJURY OR PROPERTY DAMAGE HAZARD

Failure to follow proper R-454B mitigation system installation instructions can result in property damage, personal injury, or death.

If any fault codes are listed, please troubleshoot to prevent system malfunction.

The 18-60 size units come equipped with a factory wired R-454B leak detection and dissipation system to ensure safe operation during a leak. The system consists of a bracket, a PCB, a A2L Detection Sensor, and a drain pan clip. Failure to install this system will result in potentially hazardous conditions and improper equipment operation, and void all system warranties and liabilities.

All units are shipped with the A2L Detection Sensor located in the upflow position. For sizes 18-24, the sensor will always be installed on the drain pan clip.

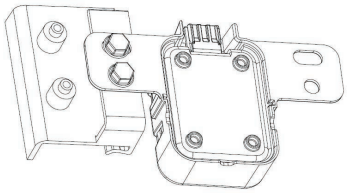

A230490

Fig. 18 – Dissipation Sensor Mounted on Drain Clip

For sizes 30-60, the sensor comes factory installed on the delta plate (Fig. 19, Fig. 20). For horizontal right and left, the sensor will need to be moved to the drain pan clip (Fig. 18, Fig. 4, Fig. 5, Fig. 6).

⚠ WARNING

PRODUCT OPERATION / INJURY HAZARD

Failure to follow this warning could cause product damage or personal injury.

Make sure the sensor is not exposed to significant amounts of dust/dirt contamination. This could clog the sensor and prevent proper functioning. For sensor cleaning instructions, refer to service manual.

IMPORTANT: Sensor must be installed with the connector facing down or facing horizontally. Sensor should never be positioned with connector facing upward. Incorrect sensor position could result in premature failure.

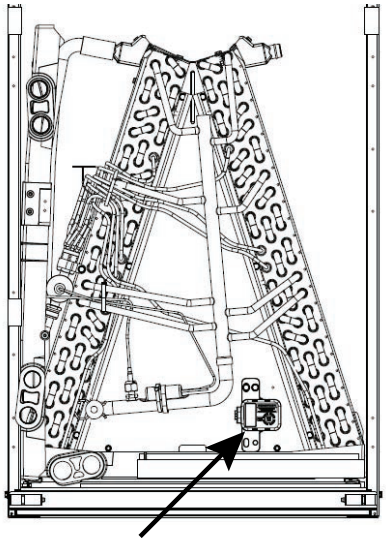

A230501

Fig. 19 – A-Coil Vertical Dissipation Sensor Factory Location

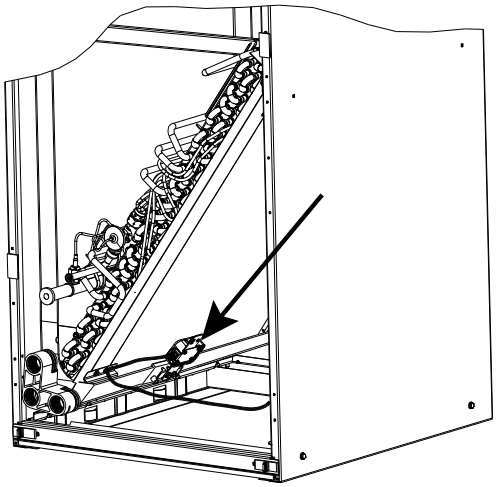

A230502

Fig. 20 – Slope Coil Vertical Dissipation Sensor Factory Location

The A2L Detection Sensor is attached to a wiring harness that connects the sensor to the dissipation board. In upflow, the routing of the wire harness is up the right side of the unit behind the wire retainers for the cabinet insulation. At each wire retainers, the harness is attached using two wire ties. When converting unit to horizontal or downflow, follow routing shown in Fig. 4, Fig. 5, or Fig. 6. When converting the unit to any orientation, ensure the sensor wiring harness is disconnected and the wire harness has been placed in the control box before any components are moved.

Refer to Fig. 9 through Fig. 12 for low voltage field connections between the dissipation board and the thermostat. All control wires are labeled with the wire function and landing point.

Leak Dissipation System Self-Test

Power on the unit and verify proper functioning of equipment. The yellow LED on the dissipation board should be steady. If flash codes are present, see (Troubleshooting on p12).

NOTE: Operation of the Test Mode is only possible if no faults exist on the dissipation board.

IMPORTANT: Press the Test button for roughly ONE SECOND to enter Test Mode. Pressing the Test button for a longer periods enables different functions (Table 2).

Press the Test button on the dissipation system control board to ensure proper dissipation system operation under each test condition listed below. After pressing the Test button, system will enter Dissipation Mode for 60 seconds to help verify correct operation.

Table 2 – Dissipation Board Test Button Functions

Hold Button Time (sec)	Function
1 - 4	Dissipation Mode for 60 seconds
5 - 29	Display flash code history
30+	Flash code 6
3 rapid presses	Clear flash code history

Ensure that the fan coil is able to meet the minimum required dissipation mode airflows. These required minimum airflow rates during Dissipation Mode are listed in Table 4. They are based on the total system refrigerant charge quantity.

Table 3 – Required Operational Checks to Ensure Proper Dissipation System Function

Normal Operation				
Test #	**T-Stat Call**	**Compressor**	**Indoor Fan**	**Electric/Gas Heat**
1	None	Off	Off	Off
2	Cool	On	On	Off
3	Heat	Off	On	On
Dissipation Activated				
4	None	Off	On	Off
5	Cool	Off	On	Off
6	Heat	Off	On	Off

Table 4 – Required Minimum Dissipation Mode Airflows, based on Total System Refrigerant Charge Quantity

Total System Charge (lb)	Minimum Required Dissipation Airflow (CFM)	Total System Charge (lb)	Minimum Required Dissipation Airflow (CFM)
5	133	16	426
6	160	17	452
7	186	18	479
8	213	19	505
9	239	20	532
10	266	21	559
11	293	22	585
12	319	23	612
13	346	24	639
14	372	25	665
15	399		

Troubleshooting

For all flash codes, first try power cycling the system to remove the code.

No power

Verify the wiring to/from pins 1 and 8 on the power harness plug. Check the 24V system wiring from the transformer.

Flashing 1

Check for refrigerant leaks using an independent R-454B detector. If no leaks are present, replace the sensor.

Flashing 2

Check both ends of the sensor wire harness to ensure proper attachment. Power cycle the system to check whether the flash code has been removed. If the flash code is still present, replace the sensor.

Flashing 3

Check for refrigerant leaks using an independent R-454B detector.

Flashing 4

If the code does not clear after power cycling the system, replace the dissipation board.

Flashing 5

If the code does not clear after power cycling the system, replace the sensor.

Flashing 6

Press the test button repeatedly. Power cycle the system. If the button cannot be reset, replace the dissipation board.

Flashing 7

Verify wiring of all "Y" and "W" wires in the applicable wiring diagram.

Flashing 8

Verify wiring of all "Y" and "W" wires in the applicable wiring diagram.

Table 5 – Flash Code Chart

Yellow LED	Reason	Mode
Solid	Normal Operation	Normal Operation
Flashing 1	Sensor >= 20% LFL	Dissipation
Flashing 2	Sensor Open	Dissipation
Flashing 3	Normal Mitigation after Leak	Dissipation
Flashing 4	No Power to G Output	Dissipation with no Blower
Flashing 5	Fault with A2L Digital Sensor	Dissipation

Table 5 – Flash Code Chart

Yellow LED	Reason	Mode
Flashing 6	Test Button Stuck (>30 s)	Dissipation
Flashing 7	Y or W Wiring Inverted	Normal Operation
Flashing 8	Y or W Shorted	Normal Operation

Accessories

Humidifier

Connect the humidifier and humidistat to the fan coil unit as shown in Fig. 22 and Fig. 23. The cooling lockout relay is optional.

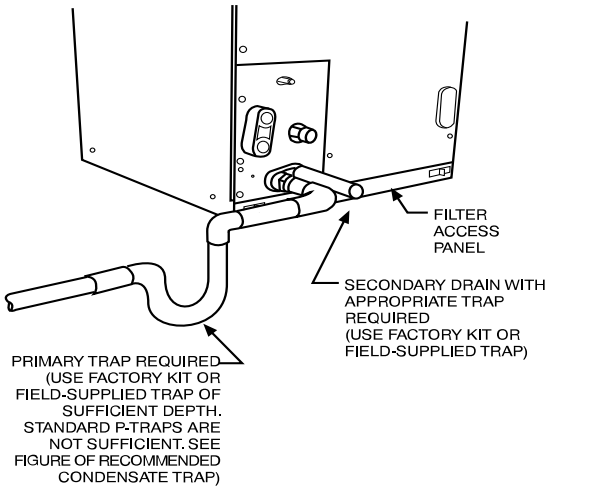

Fig. 21 – Condensate Drain

Sequence of Operation

Continuous Fan

Thermostat closes the R to G connection. G passes through the dissipation board and energizes the fan relay on the PCB which completes the circuit to the indoor blower motor. When G is de-energized, there is a 90-second delay before the relay opens.

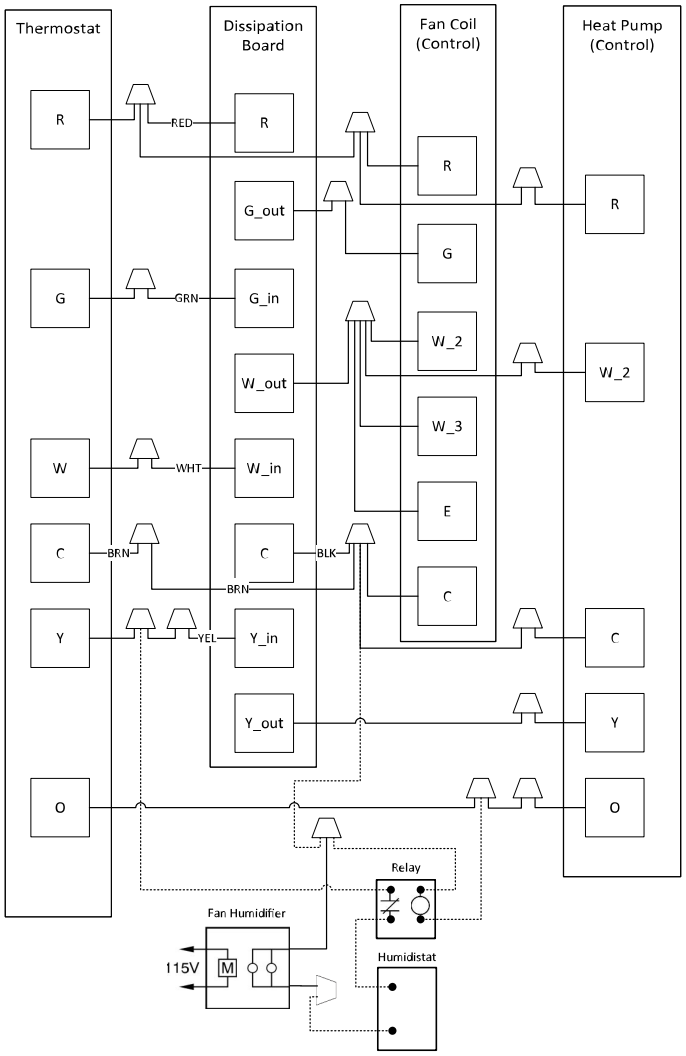

Fig. 22 – Wiring Layout of Humidifier to Heat Pump

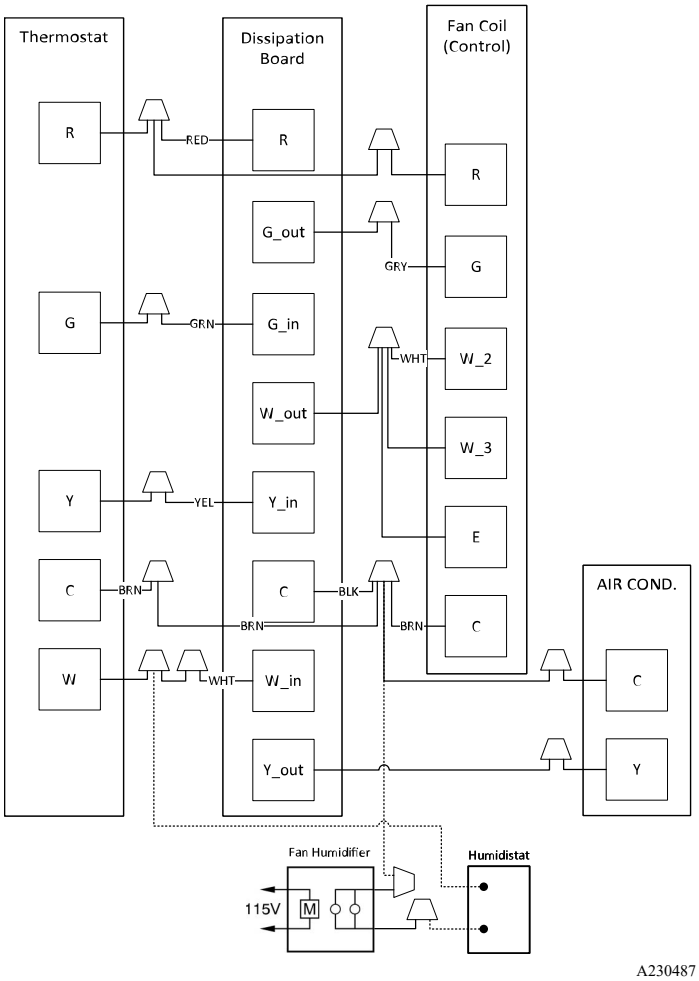

Fig. 23 – Wiring Layout of Humidifier to Fan Coil with Electric Heat

Cooling Mode

Thermostat energizes R to G, R to Y, and R to O (heat pump only). G and Y pass through the dissipation board to their respective outputs. G energizes the fan relay on the PCB which completes the circuit to the indoor blower motor. When G is de-energized, there is a 90-second delay before the fan relay opens.

Heat Pump Heating with Auxiliary Electric Heat

Thermostat energizes R to G, R to Y, and R to W connections. G and Y pass through the dissipation board to their respective outputs. G energizes the fan relay on the PCB which completes the circuit to the indoor blower motor. W energizes the electric heat relay(s) which completes the circuit to the heater element(s). When W is de-energized, the electric heat relay(s) open, turning off the heater elements. When G is de-energized there is a 90-second delay before the fan relay opens.

Electric Heat or Emergency Heat Mode

Thermostat closes R to W connection. W passes through the dissipation board and energizes the electric heat relay(s) which completes the circuit to the heater element(s). Blower motor is energized through the normally-closed contacts on the fan relay. When W is de-energized, the electric heat relay(s) opens.

Leak Dissipation Mode

Thermostat energizes appropriate signals to the dissipation board based on operation mode. The dissipation board energizes G output, which energizes the fan relay on the PCB to complete the circuit to the indoor blower motor. The dissipation board opens switches for W and Y. This de-energizes signals going to electric heat and outdoor compressor which opens the electric heat relay(s).

Start-up Procedures

Refer to outdoor unit Installation Instructions for system start-up instructions and refrigerant charging method details.

When charging unit, ensure your conditioned space is larger than the minimum floor area shown in Table 6. For charging quantities outside of the range of the table, use the following equation to determine your minimum area: A_min = 15 x Total Charge (lbs) - ft^2.

Table 6 – Charge Table

Charge (lb.)	Minimum Floor Area (sq. ft.)	Charge (lb.)	Minimum Floor Area (sq. ft.)
4	61	15	228
5	76	16	243
6	91	17	258
7	106	18	274
8	122	19	289
9	137	20	304
10	152	21	319
11	167	22	335
12	182	23	350
13	198	24	365
14	213	25	380

CAUTION

PRODUCT DAMAGE HAZARD

Failure to follow this caution may result in poor unit performance and/or product damage.

Never operate unit without a filter. Factory authorized filter kits may be used when locating the filter inside the unit. For those applications where access to an internal filter is impractical, a field-supplied filter must be installed in the return air duct system.

Care and Maintenance

To continue high performance and minimize possible equipment failure, it is essential that periodic maintenance be performed on this equipment. Consult your local dealer as to the proper frequency of maintenance contract.

The ability to properly perform maintenance on this equipment requires certain mechanical skills and tools. If you do not possess these, contact your dealer for maintenance. The only consumer service recommended or required is filter replacement or cleaning on a monthly basis.

NOTE: Servicing the blower assembly requires the removal of two screws that attach the blower housing to the fan deck. It is not necessary to reinstall of these screws after service.

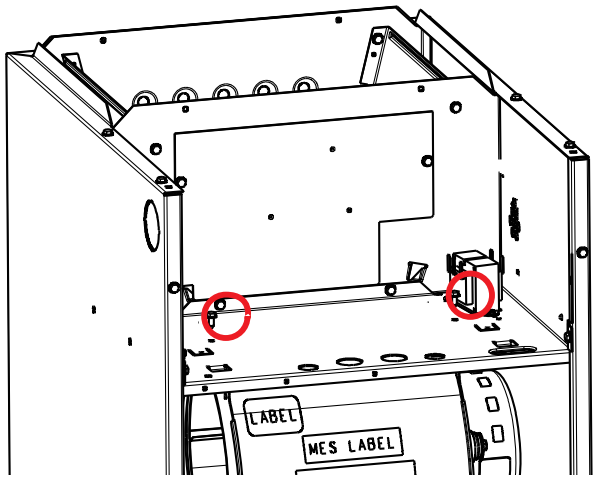

A221041A

Fig. 24 – Shipping Screws

Table 7 – Electric Heater Static Pressure Drop (in. wc)

Sizes 18 - 36			Sizes 42 - 60		
Heater Elements	kW	External Static Pressure Correction	Heater Elements	kW	External Static Pressure Correction
0	0	+.02	0	0	+.04
1	3, 5	+.01	1	3, 5	+.03
2	8, 10	0	2	8, 10	+.02
3	9, 15	-.02	3	9, 15	0
4	20	-.04	4	20	-.02
			6	18, 24, 30	-.10

Table 8 – Airflow Performance (CFM) Wet

Ton (Size)	Blower Speed	External Static (in. wc)									
		0.1	0.2	0.3	0.4	0.5	0.6	0.7	0.8	0.9	1.0
1-1/2 (18)	Tap 5	754	737	717	694	668	641	605	572	528	481
	Tap 4	695	678	655	628	600	573	551	520	479	421
	Tap 3	695	678	655	628	600	573	551	520	479	421
	Tap 2	643	620	591	557	534	506	477	439	408	378
	Tap 1	487	448	428	394	358	325	281	NA	NA	NA
2 (24)	Tap 5	1021	1003	964	925	876	838	797	761	726	689
	Tap 4	936	907	873	805	779	732	696	661	626	591
	Tap 3	936	907	873	805	779	732	696	661	626	591
	Tap 2	846	831	792	739	702	651	609	548	536	491
	Tap 1	746	697	629	567	521	477	446	389	364	326
2-1/2 (30)	Tap 5	1247	1215	1188	1154	1122	1083	1053	1017	971	915
	Tap 4	1133	1114	1082	1044	1009	968	924	873	835	785
	Tap 3	1133	1114	1082	1044	1009	968	924	873	835	785
	Tap 2	1040	997	961	929	883	828	782	725	708	667
	Tap 1	896	862	805	740	689	648	597	NA	NA	NA
3 (36)	Tap 5	1433	1404	1363	1328	1282	1251	1201	1145	1095	1021
	Tap 4	1304	1277	1256	1230	1207	1168	1122	1080	1073	983
	Tap 3	1304	1277	1256	1230	1207	1168	1122	1080	1073	983
	Tap 2	1183	1148	1124	1094	1051	1005	955	901	846	783
	Tap 1	1020	995	958	921	881	840	791	735	693	649
3-1/2 (42)	Tap 5	1571	1551	1508	1473	1439	1407	1372	1317	1253	1189
	Tap 4	1517	1493	1458	1425	1392	1358	1328	1295	1253	1193
	Tap 3	1517	1493	1458	1425	1392	1358	1328	1295	1253	1193
	Tap 2	1369	1339	1299	1263	1226	1188	1155	1112	1068	1012
	Tap 1	1135	1099	1048	966	908	852	802	755	698	587
4 (48)	Tap 5	1896	1853	1821	1795	1760	1737	1702	1670	1665	1619
	Tap 4	1711	1673	1643	1607	1570	1549	1509	1490	1446	1411
	Tap 3	1711	1673	1643	1607	1570	1549	1509	1490	1446	1411
	Tap 2	1547	1504	1466	1416	1388	1369	1324	1290	1239	1200
	Tap 1	1397	1347	1312	1269	1232	1172	1135	1086	1038	989
5 (60)	Tap 5	2109	2067	2043	1996	1967	1928	1899	1848	1812	1766
	Tap 4	2109	2067	2043	1996	1967	1928	1899	1848	1812	1766
	Tap 3	2109	2067	2043	1996	1967	1928	1899	1848	1812	1766
	Tap 2	1901	1868	1825	1785	1737	1710	1662	1620	1584	1521
	Tap 1	1583	1557	1499	1451	1392	1358	1313	1259	1194	1138

Manufacturer reserves the right to change, at any time, specifications and designs without notice and without obligations.

Table 9 – Airflow Performance (CFM) Dry

Ton (Size)	Blower Speed	External Static (in. wc)									
		0.1	0.2	0.3	0.4	0.5	0.6	0.7	0.8	0.9	1.0
1-1/2 (18)	Tap 5	762	741	721	698	672	656	635	577	547	509
	Tap 4	695	679	655	628	600	580	559	534	505	452
	Tap 3	695	679	655	628	600	580	559	534	505	452
	Tap 2	634	615	585	547	522	506	475	444	407	371
	Tap 1	498	470	434	390	356	300	272	NA	NA	NA
2 (24)	Tap 5	1046	1013	978	958	925	877	830	752	722	687
	Tap 4	992	950	916	869	812	763	705	660	611	585
	Tap 3	992	950	916	869	812	763	705	660	611	585
	Tap 2	900	862	814	769	709	644	594	548	507	451
	Tap 1	762	723	651	599	531	471	428	385	345	319
2-1/2 (30)	Tap 5	1277	1244	1226	1193	1169	1122	1094	1058	1014	969
	Tap 4	1179	1142	1114	1070	1039	998	937	915	867	825
	Tap 3	1179	1142	1114	1070	1039	998	937	915	867	825
	Tap 2	1066	1030	997	960	916	863	795	746	703	674
	Tap 1	923	878	832	784	723	658	616	563	NA	NA
3 (36)	Tap 5	1489	1463	1428	1388	1345	1305	1262	1213	1160	1093
	Tap 4	1357	1337	1310	1283	1249	1212	1165	1114	1064	1014
	Tap 3	1357	1337	1310	1283	1249	1212	1165	1114	1064	1014
	Tap 2	1211	1190	1162	1132	1100	1066	1016	959	905	838
	Tap 1	1059	1038	1004	967	925	887	843	791	747	681
3-1/2 (42)	Tap 5	1647	1620	1583	1548	1505	1464	1424	1379	1319	1250
	Tap 4	1569	1539	1506	1476	1442	1404	1370	1336	1299	1219
	Tap 3	1569	1539	1506	1476	1442	1404	1370	1336	1299	1219
	Tap 2	1393	1355	1329	1288	1248	1223	1180	1138	1091	1037
	Tap 1	1190	1138	1083	1020	936	869	814	762	728	631
4 (48)	Tap 5	1956	1917	1887	1855	1831	1798	1763	1743	1707	1683
	Tap 4	1773	1743	1704	1667	1634	1612	1571	1536	1500	1464
	Tap 3	1773	1743	1704	1667	1634	1612	1571	1536	1500	1464
	Tap 2	1566	1524	1483	1451	1414	1376	1340	1303	1266	1217
	Tap 1	1413	1373	1328	1283	1246	1204	1168	1120	1075	1012
5 (60)	Tap 5	2148	2123	2084	2048	2002	1974	1939	1891	1893	1812
	Tap 4	2148	2123	2084	2048	2002	1974	1939	1891	1893	1812
	Tap 3	2148	2123	2084	2048	2002	1974	1939	1891	1893	1812
	Tap 2	1955	1913	1868	1833	1796	1757	1711	1654	1632	1570
	Tap 1	1646	1590	1527	1496	1442	1373	1315	1294	1221	1164

NOTES:

1. Airflow based upon dry coil at 230V with factory-approved filter and electric heater (2 element heater sizes 18 through 36, 3 element heater sizes 42 through 60).
2. To avoid potential for condensate blowing out of drain pan prior to making drain trap:
   Return static pressure must be less than 0.40 in. wc. Horizontal applications of 42 - 60 sizes must have supply static greater than 0.20 in. wc.
   Airflow above 400 cfm/ton on 48-60 size could result in condensate blowing off coil or splashing out of drain pan.

© 2025 Carrier. All rights reserved.

Manufacturer reserves the right to change, at any time, specifications and designs without notice and without obligations.