PG95XAT
CONDENSING GAS FURNACE

Product Data

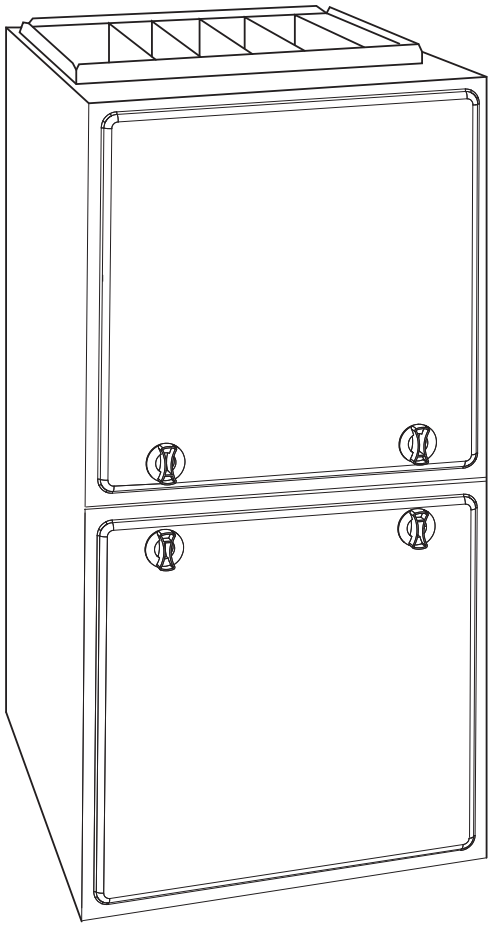

A11300

Utilizing the extensive resources available to Payne®, a new standard of excellence has been achieved with the model PG95XAT. The model is a unique 4-way multipoise condensing furnace with features like no other product in its class including two heating stages and an efficient ECM Blower Motor. The PG95XAT builds on the many Payne successes in the furnace industry and establishes a new standard for all high-efficiency gas furnaces.

STANDARD FEATURES

- Heating efficiency of 95.5% AFUE.
- All sizes meet ENERGY STAR® Version 4.0 criteria for gas furnaces: 95+ AFUE; AMACF electrical rating; 2% or less cabinet airflow leakage.
- Two heating stages.
- Efficient ECM blower motor.
- 4-way multipoise furnace.
- Humidity control when paired with a compatible condensing unit and using a humidity sensing thermostat.
- Adjustable constant fan speed from a compatible thermostat.
- LED diagnostics and self test feature.
- Stores fault codes during power outages.
- Adjustable heating air temperature rise.
- Approved for Twinning applications (42060 through 66120 sizes, only).
- Dehumidification terminals on control board
- Hot surface ignition.
- Dual fuel compatible.
- Two-speed inducer motor.
- Certified to leak 2% or less of nominal air conditioning CFM delivered when pressurized to 1-in. water column with all present air inlets, air outlets, and condensate drain port(s) sealed.

Use of the AHRI Certified TM Mark indicates a manufacturer's participation in the program. For verification of certification for individual products, go to www.ahridirectory.org.

Always Ask For FACTORY AUTHORIZED PARTS

SAP ORDERING NO.	CASING DIMENSIONS (IN.)			RATED HEATING OUTPUT† (BTUH)			HEATING AIRFLOW			COOLING CFM @ 0.5 ESP	MOTOR HP-SPEED	APPROX. SHIP WT (LB)
	H	D	W	High	Low	AFUE	CFM‡ (Low Heating)	CFM (High Heating)	High Heating ESP			
PG95XAT30040A	35	30	14.2	39,000	25,000	95.5%	590	695	0.10	385-925	1/2 - 5	125
PG95XAT42060B	35	30	17.5	58,000	38,000	95.5%	785	1000	0.12	530-1505	3/4 - 5	146
PG95XAT48080B	35	30	17.5	78,000	50,000	95.5%	1095	1360	0.15	920-1610	3/4 - 5	156
PG95XAT60080C	35	30	21.0	78,000	51,000	95.5%	1055	1360	0.15	795-2015	1 - 5	161
PG95XAT60100C	35	30	21.0	97,000	63,000	95.5%	1325	1700	0.20	1105-2110	1 - 5	171
PG95XAT66120D	35	30	24.5	117,000	76,000	95.5%	1610	2125	0.20	1385-2055	1 - 5	195

† Capacity in accordance with DOE test procedures. Ratings are position dependent. See rating plate.
‡ Heating CFM at factory default blower motor heating tap settings.
ESP – External Static Pressure

FEATURES AND BENEFITS

Advanced Heat Staging — This furnace promotes homeowner comfort through two stages of heating by offering a patented algorithm that continually monitors and adjusts furnace operation. By looking at both current and past conditions to determine the most effective stage of heating and the amount of time to run each stage, every cycle the furnace confidently meets the homeowner comfort demands each and every time.

Advanced Dehumidification — When paired with a compatible thermostat, this dehumidification feature overrides the cooling blower off-delay when there is a call for dehumidification. By deactivating the blower off-delay, this feature prevents condensate that remains on the coil after a dehumidification cycle from re-humidifying throughout the home. This results in reduced humidity and a more comfortable indoor environment for the homeowner.

Unlike competitive systems, this feature only overrides the cooling blower off delay when humidity control is needed. Once humidity is back in control, the energy-saving cooling blower off-delay is re-enabled.

Adjustable Fan Speeds — Constant fan setting on a standard furnace system can sometimes actually reduce homeowner comfort by providing too much or too little air! This feature improves comfort all year long by allowing the homeowner to select the continuous fan speed of their choice using a compatible thermostat.

HYBRID HEAT® Dual Fuel System Compatible — This system can provide more control over your monthly energy bills by automatically selecting the most economical method of heating. With HYBRID HEAT components, our system automatically switches between the gas furnace and the electric heat pump as outside temperatures change to maintain greater efficiency and comfort than with any traditional single-source heating system. The heat pump also delivers high-efficiency cooling in the summer.

Robust Igniter — Payne's unique SiN igniter is not only physically robust but it is also electrically robust. It is capable of running at line voltage and does not require complex voltage regulators as do other brands. This unique feature further enhances the gas furnace reliability and continues Payne's tradition of technology leadership and innovation in providing a reliable and durable product.

ECM Blower Motor — Our ECM, or electronically commutated motor, can provide an efficiency enhancement for select Payne air conditioner or heat pump systems. It uses less electrical power than its PSC counterpart and also has a wider range of speeds

Reliable Heat Exchanger Design — The aluminized steel, clam shell primary heat exchanger was re-engineered to achieve greater efficiency out of a smaller size. The first two passes of the heat exchanger are based on the current 80% product, a design with more than ten years of field-proven performance and success. These innovations, paired with the continuation of a crimped, no-weld seam create an efficient, robust design for this essential component.

The condensing heat exchanger, a stainless steel fin and tube design, is positioned in the furnace to extract additional heat. Stainless steel coupling box componentry between heat exchangers has exceptional corrosion resistance in both natural gas and propane applications.

4-Way Multipoise Design — One model for all applications – there is no need to stock special downflow or horizontal models when one unit will do it all. The new heat exchanger design allows these units to achieve the certified AFUE in all positions.

Direct or Single-pipe Venting, or Optional Ventilated Combustion Air — This furnace can be installed as a 2-pipe (Direct Vent) furnace, in an optional ventilated combustion air application, or in single-pipe, non-direct vent applications. This provides added flexibility to meet diverse installation needs.

Sealed Combustion System—This furnace brings in combustion air from outside the furnace, which results in especially quiet operation. By sealing the entire combustion vestibule, the entire furnace can be made quieter, not just the burners.

Insulated Casing — Foil-faced insulation in heat exchanger section of the casing minimizes heat loss. The acoustical insulation in the blower compartment reduces air and motor noise for quiet operation.

Monoport Burners — The burners are specially designed and finely tuned for smooth, quiet combustion and economical operation.

Bottom Closure — Factory-installed for side return; easily removable for bottom return. The multi-use bottom closure can also serve for roll-out protection in horizontal applications, and act as the bottom closure for the optional return air base accessory.

Blower Access Panel Switch — Automatically shuts off 115-v power to furnace whenever blower access panel is opened.

Quality Registration — Our furnaces are engineered and manufactured under an ISO 9001 registered quality system.

Certifications — This furnace is CSA (AGA and CGA) design certified for use with natural and propane gases. The furnace is factory-shipped for use with natural gas. A CSA listed gas conversion kit is required to convert furnace for use with propane gas. The efficiency is GAMA efficiency rating certified. This furnace meets California Air Quality Management District emission requirements.

SPECIFICATIONS

Heating Capacity and Efficiency			30040	42060	48080	60080	60100	66120
Input	High Heat	(BTUH)	40,000	60,000	80,000	80,000	100,000	120,000
	Low Heat	(BTUH)	26,000	39,000	52,000	52,000	65,000	78,000
Output	High Heat	(BTUH)	39,000	58,000	78,000	78,000	97,000	117,000
	Low Heat	(BTUH)	25,000	38,000	50,000	51,000	63,000	76,000
Efficiency	AFUE % (ICS)		95.5	95.5	95.5	95.5	95.5	95.5
Certified Temperature Rise Range ºF (ºC)		High Heat	40 - 70 (22 - 39)	40 - 70 (22 - 39)	40 - 70 (22 - 39)	40 - 70 (22 - 39)	40 - 70 (22 - 39)	40 - 70 (22 - 39)
		Low Heat	30 - 60 (17 - 33)	30 - 60 (17 - 33)	30 - 60 (17 - 33)	30 - 60 (17 - 33)	30 - 60 (17 - 33)	30 - 60 (17 - 33)

Airflow Capacity and Blower Data		30040	42060	48080	60080	60100	66120
Rated External Static Pressure (in. w.c.)	Heating	0.10	0.12	0.15	0.15	0.20	0.20
	Cooling	0.5	0.5	0.5	0.5	0.5	0.5
Airflow Delivery @ Rated ESP (CFM)	High Heat	695	1000	1360	1360	1700	2125
	Low Heat	590	785	1095	1055	1325	1610
	Cooling	925	1505	1610	2015	2110	2055
Cooling Capacity (tons)	400 CFM/ton	2	3.5	4	5	5	5
	350 CFM/ton	2.5	4	4.5	5.5	6	6
Direct-Drive Motor Type		Electronically Commutated Motor (ECM)					
Direct-Drive Motor HP		1/2	3/4	3/4	1	1	1
Motor Full Load Amps		6.8	8.4	8.4	10.9	10.9	10.9
RPM Range		600 - 1200					
Speed Selections		5					
Blower Wheel Dia x Width	in.	11 x 7	11 x 8	11 x 8	11 x 10	11 x 10	11 x 11
Air Filtration System		Field Supplied					
Filter Used for Certified Watt Data*		KGAWF**06UFR					

Electrical Data		30040	42060	48080	60080	60100	66120
Input Voltage	Volts-Hertz-Phase	115-60-1					
Operating Voltage Range	Min-Max	104-127					
Maximum Input Amps	Amps	7.5	9.2	9.2	11.7	11.8	11.8
Unit Ampacity	Amps	10.3	12.4	12.4	15.5	15.6	15.6
Minimum Wire Size	AWG	14	14	14	12	12	12
Maximum Wire Length @ Minimum Wire Size	Feet	36	29	29	37	36	36
	(M)	(11.0)	(8.8)	(8.8)	(13.3)	(10.7)	(11.0)
Maximum Fuse/Ckt Bkr (Time-Delay Type Recommended)	Amps	15	15	15	20	20	20
Transformer Capacity (24vac output)		40 VA					
External Control Power Available	Heating	24.3 VA					
	Cooling	34.6 VA					

Controls		30040	42060	48080	60080	60100	66120
Gas Connection Size		1/2" - NPT					
Burners (Monoport)		2	3	4	4	5	6
Gas Valve (Redundant)	Manufacturer	White Rogers					
Minimum Inlet Gas pressure (in. wc)		4.5					
Maximum Inlet Gas pressure (in. wc)		13.6					
Gas Conversion Kit - Natural to Propane		KGANP51012SP					
Gas Conversion Kit - Propane to Natural		KGAPN43012SP					
Manufactured (Mobile) Home Kit		*not approved for MH use*					
Ignition Device		Silicon Nitride					
Limit Control		165	180	170	200	180	160
Heating Blower Control (Heating Off-Delay)		Adjustable: 90, 120, 150, 180 seconds					
Cooling Blower Control (Time Delay Relay)		90 seconds					
Communication System		*none*					
Thermostat Connections		Com 24V, R, W/W1, G, Y/Y2, DHUM, Y1, W2					
Accessory Connections		EAC (115vac); HUM (24vac); 1-stg AC (via Y/Y2)					

* See Accessory List for part numbers available.

MODEL NUMBER NOMENCLATURE

Example of a Model Number

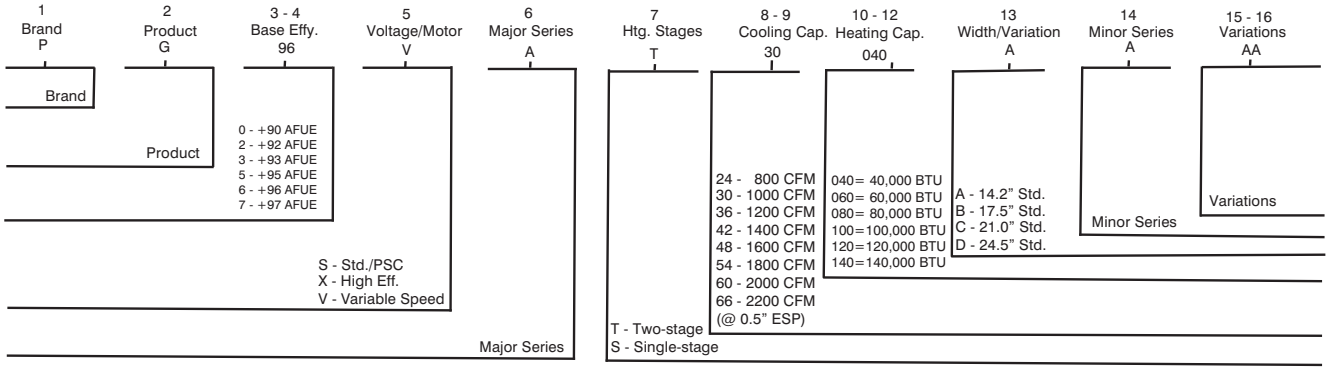

Not all familes have these models.

A12375

PG95XAT

FURNACE COMPONENTS

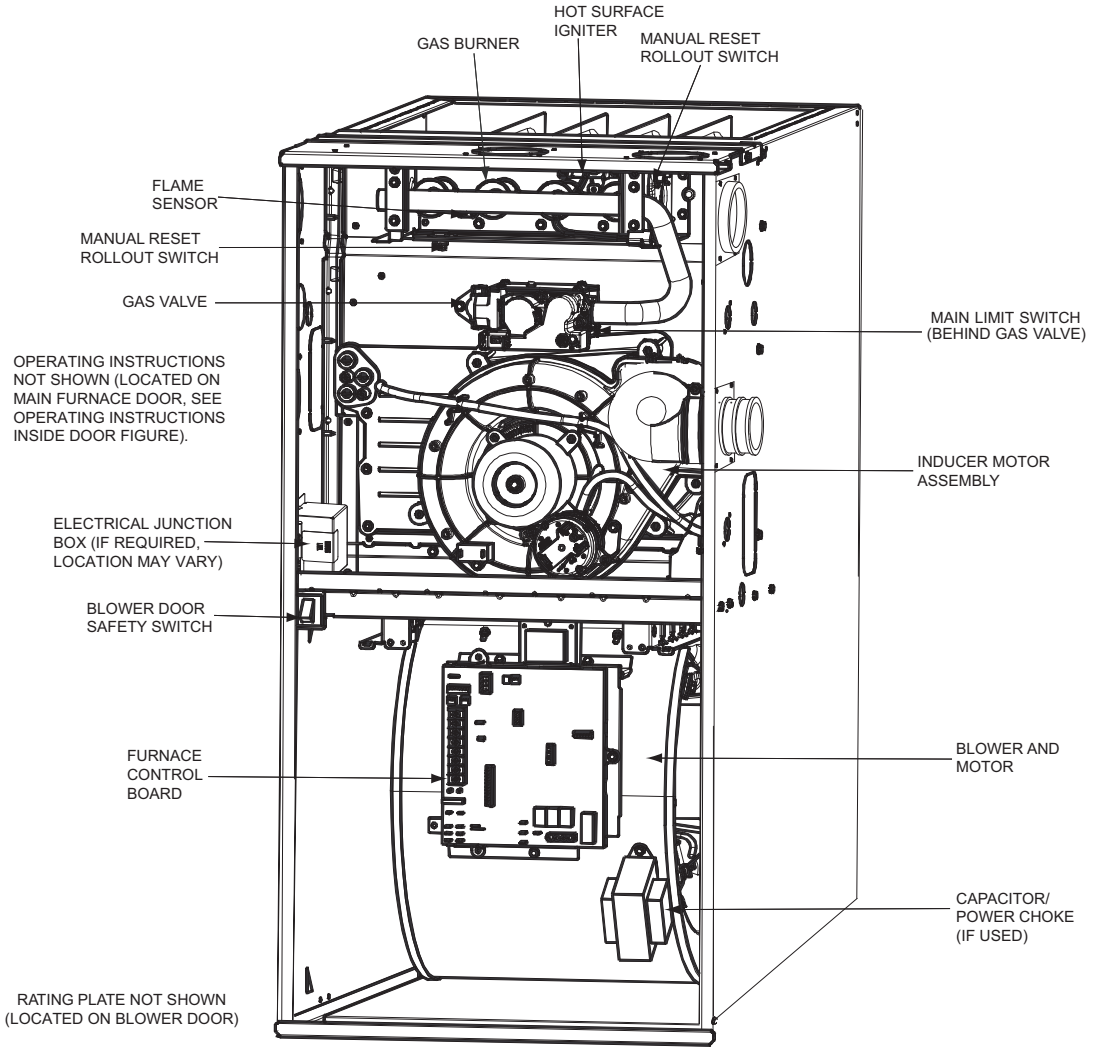

REPRESENTATIVE DRAWING ONLY, SOME MODELS MAY VARY IN APPEARANCE.

A11485

ACCESSORIES

DESCRIPTION	PART NUMBER	30040	42060	48080	60080	60100	66120
Venting Accessories							
Vent Kit - Through the Cabinet	KGADC0101BVC	●	●	●	●	●	●
Vent Terminal - Concentric - 2” (51 mm)	KGAVT0701CVT	See Venting Tables					
Vent Terminal - Concentric - 3” (76 mm)	KGAVT0801CVT						
Vent Terminal Bracket - 2” (51 mm)	KGAVT0101BRA						
Vent Terminal Bracket - 3” (76 mm)	KGAVT0201BRA						
Vent Kit – Rubber Coupling	KGAAC0101RVC	See Venting Tables					
Condensate Drainage Accessories							
Freeze Protect Kit - Heat Tape	KGAHT0101CFP	●	●	●	●	●	●
CPVC to PVC Drain Adapters - 1/2” CPVC to 3/4” PVC	KGAAD0110PVC	●	●	●	●	●	●
Horizontal Trap Grommet - Direct Vent	KGACK0101HCK	All DV Horizontal					
Condensate Neutralizer Kit	P908–0001	●	●	●	●	●	●
External Trap Kit	KGAET0201ETK	●	●	●	●	●	●
Ductwork Adapter Accessories							
Furnace Base Kit for Combustible Floors	KGASB0201ALL	●	●	●	●	●	●
Coil Adapter Kits – No Offset	KGADA0101ALL	●	●	●	●	●	●
Coil Adapter Kits – Single Offset	KGADA0201ALL	●	●	●	●	●	●
Coil Adapter Kits – Double Offset	KGADA0301ALL	●	●	●	●	●	●
Return Air Base (Upflow Applications) 14.0–in. wide	KGARP0301B14	●					
Return Air Base (Upflow Applications) 17.5–in. wide	KGARP0301B17		●	●			
Return Air Base (Upflow Applications) 21.0–in. wide	KGARP0301B21				●	●	
Return Air Base (Upflow Applications) 24.5–in. wide	KGARP0301B24						●
IAQ Device Duct Adapters 20.0–in. IAQ to 16 in. Side Return	KGAAD0101MEC	20”x25” IAQ Devices					
IAQ Device Duct Adapters 24.0–in. IAQ to 16 in. Side Return	KGAAD0201MEC	24”x25” IAQ Devices					
Gas Conversion Accessories							
Gas Conversion Kit - Nat to LP	KGANP51012SP	●	●	●	●	●	●
Gas Conversion Kit - LP to Nat	KGAPN43012SP	●	●	●	●	●	●
Gas Orifice Kit - #42 (Nat Gas)	LH32DB207	●	●	●	●	●	●
Gas Orifice Kit - #43 (Nat Gas)	LH32DB202	●	●	●	●	●	●
Gas Orifice Kit - #44 (Nat Gas)	LH32DB200	●	●	●	●	●	●
Gas Orifice Kit - #45 (Nat Gas)	LH32DB205	●	●	●	●	●	●
Gas Orifice Kit - #46 (Nat Gas)	LH32DB208	●	●	●	●	●	●
Gas Orifice Kit - #47 (Nat Gas)	LH32DB078	●	●	●	●	●	●
Gas Orifice Kit - #48 (Nat Gas)	LH32DB076	●	●	●	●	●	●
Gas Orifice Kit - #54 (LP)	LH32DB203	●	●	●	●	●	●
Gas Orifice Kit - #55 (LP)	LH32DB201	●	●	●	●	●	●
Gas Orifice Kit - #56 (LP)	LH32DB206	●	●	●	●	●	●
Gas Orifice Kit - 1.25mm (LP)	LH32DB209	●	●	●	●	●	●
Gas Orifice Kit - 1.30mm (LP)	LH32DB210	●	●	●	●	●	●
Control Accessories							
Twinning Kit	KGATW0701HSI		●	●	●	●	●
IAQ Accessories							
Filter Rack – Side Return for 1” Filters 16x25 (406x635)	KGAFR0801SRE	●					
Filter Rack – Bottom Return for 1” Filters 14.2–in. wide	KGAFR0401B14	●					
Filter Rack – Bottom Return for 1” Filters 17.5–in. wide	KGAFR0501B17		●	●			
Filter Rack – Bottom Return for 1” Filters 21.0–in. wide	KGAFR0601B21				●	●	
Filter Rack – Bottom Return for 1” Filters 24.5–in. wide	KGAFR0701B24						●
Filter Pack (6 pack) – Washable - 16x25x1 (406x635x25 mm)	KGAWF1306UFR	●	●	●	●	●	●
Filter Pack (6 pack) – Washable - 24x25x1 (610x635x25 mm)	KGAWF1506UFR	●	●	●	●	●	●
Filter Cabinet - Side or Bottom Return for 4” filters 16” (406 mm)	KGAWF1506UFR	●	●	●	●	●	●
Filter Cabinet - Side or Bottom Return for 4” filters 20” (508 mm)	KGAWF1506UFR	●	●	●	●	●	●
Filter Cabinet - Side or Bottom Return for 4” filters 24” (610 mm)	KGAWF1506UFR	●	●	●	●	●	●
EZ-Flex Filter - 16” (406 mm)	EXPXXFIL0016	Use with EZXCAB–1016					
EZ-Flex Filter - 20” (508 mm)	EXPXXFIL0020	Use with EZXCAB–1020					
EZ-Flex Filter - 24” (610 mm)	EXPXXFIL0024	Use with EZXCAB–1024					
EZ-Flex Filter with End Caps - 16” (406 mm)	EXPXXUNV0016	Use with EZXCAB–1016					
EZ-Flex Filter with End Caps - 20” (508 mm)	EXPXXUNV0020	Use with EZXCAB–1020					
EZ-Flex Filter with End Caps - 24” (610 mm)	EXPXXUNV0024	Use with EZXCAB–1024					
Cartridge Media Filter - 16” (406 mm)	FILXXCAR0016	Use with FILCABXL–1016					
Cartridge Media Filter - 20” (508 mm)	FILXXCAR0020	Use with FILCABXL–1020					
Cartridge Media Filter - 24” (610 mm)	FILXXCAR0024	Use with FILCABXL–1024					

● = Used with the model furnace

AIR DELIVERY - CFM (BOTTOM RETURN WITH FILTER)

UNIT SIZE	RETURN-AIR CONNECTION	SPEED TAPS [2, 3]	EXTERNAL STATIC PRESSURE (IN.W.C.)									
			0.1	0.2	0.3	0.4	0.5	0.6	0.7	0.8	0.9	1.0
030040	SIDE/BOTTOM	Gray	1120	1080	1030	980	925	875	820	760	690	630
		Yellow	880	845	810	780	740	710	680	640	615	570
		Blue	695	665	620	575	535	495	455	420	370	280
		Orange	640	595	540	495	460	420	370	310	260	230
		Red	570	525	475	425	385	330	255	220	- [6]	- [6]
042060	SIDE/BOTTOM	Gray	1720	1670	1620	1565	1505	1440	1375	1295	1220	1135
		Yellow	1325	1285	1255	1220	1185	1145	1115	1075	1040	1000
		Blue	1010	970	925	875	835	785	745	690	660	620
		Orange	1160	1115	1080	1045	1000	960	920	875	840	785
		Red	785	715	655	595	530	490	435	385	340	285
048080	SIDE/BOTTOM	Gray	1810	1770	1720	1665	1610	1540	1475	1400	1315	1235
		Yellow	1535	1500	1475	1435	1405	1370	1340	1310	1245	1160
		Blue	1380	1340	1305	1270	1240	1200	1165	1130	1090	1050
		Orange	1180	1130	1095	1060	1015	975	935	895	850	800
		Red	1100	1045	1010	970	920	885	845	790	745	690
060080	BOTTOM or TWO-SIDES [4, 5]	Gray	2290	2225	2155	2090	2015	1930	1845	1750	1640	1515
		Yellow	1810	1760	1725	1685	1640	1600	1555	1520	1480	1415
		Blue	1385	1340	1285	1240	1200	1140	1090	1050	995	950
		Orange	1560	1520	1475	1430	1385	1335	1295	1240	1200	1150
		Red	1055	985	910	860	795	750	680	615	565	495
060100	BOTTOM or TWO-SIDES [4, 5]	Gray	2340	2295	2250	2195	2110	2030	1935	1835	1725	1605
		Yellow	1950	1900	1855	1800	1755	1705	1655	1605	1560	1485
		Blue	1750	1700	1650	1605	1555	1500	1455	1395	1350	1300
		Orange	1570	1520	1460	1410	1350	1300	1240	1195	1140	1095
		Red	1350	1280	1225	1155	1105	1045	1000	950	895	830
066120	BOTTOM or TWO-SIDES [4, 5]	Gray	2275	2230	2185	2130	2055	1950	1825	1710	1610	1500
		Yellow	1875	1820	1770	1720	1660	1600	1550	1505	1450	1390
		Blue	2170	2125	2075	2025	1975	1900	1790	1695	1590	1470
		Orange [3]	1475	1420	1350	1280	1215	1165	1105	1050	995	930
		Red [3]	1625	1565	1505	1445	1385	1325	1275	1225	1170	1130

NOTE:

1. A filter is required for each return–air inlet. Airflow performance includes a 3/4–in. (19 mm) washable filter media such as contained in a factory–authorized accessory filter rack. See accessory list. To determine airflow performance without this filter, assume an additional 0.1 in. w.c. available external static pressure.
2. **ADJUST THE BLOWER SPEED TAPS AS NECESSARY FOR THE PROPER AIR TEMPERATURE RISE FOR EACH INSTALLATION.**
3. Shaded areas indicate that this airflow range is **BELOW THE RANGE ALLOWED FOR HIGH–STAGE HEATING OPERATION. THESE AIRFLOW RANGES MAY ONLY BE USED FOR LOW–STAGE HEAT OR COOLING.**
4. Airflows over 1800 CFM require bottom return, two–side return, or bottom and side return. A minimum filter size of 20" x 25" (508 x 635 mm) is required.
5. For upflow applications, air entering from one side into both the side of the furnace and a return air base counts as a side and bottom return.
6. The "–" entry indicates an unstable operating condition.

MAXIMUM ALLOWABLE EXPOSED VENT LENGTHS INSULATION TABLE - FT. / M

Two Stage Furnace High Heat Input	Winter Design Temp ° F (° C)	Pipe Length in Ft. & M	No Insulation					3/8-in. (9.5 mm)					1/2-in. (12.7 mm)				
			Pipe Diameter-inches (mm)					Pipe Diameter-inches (mm)					Pipe Diameter-inches (mm)				
			1.5	2.0	2.5	3.0	4.0	1.5	2.0	2.5	3.0	4.0	1.5	2.0	2.5	3.0	4.0
			(38)	(51)	(64)	(76)	(102)	(38)	(51)	(64)	(76)	(102)	(38)	(51)	(64)	(76)	(102)
40000*	20 (-10)	Ft.	40.0	35.0	35.0	N/A	N/A	50.0	104.0	94.0	N/A	N/A	50.0	122.0	110.0	N/A	N/A
		M	12.2	10.7	10.7	N/A	N/A	15.2	31.7	28.7	N/A	N/A	15.2	37.2	33.5	N/A	N/A
	0 (-20)	Ft.	19.0	14.0	12.0	N/A	N/A	50.0	61.0	54.0	N/A	N/A	50.0	74.0	65.0	N/A	N/A
		M	5.8	4.3	3.7	N/A	N/A	15.2	18.6	16.5	N/A	N/A	15.2	22.6	19.8	N/A	N/A
	-20 (-30)	Ft.	9.0	3.0	1.0	N/A	N/A	50.0	41.0	35.0	N/A	N/A	50.0	51.0	43.0	N/A	N/A
		M	2.7	0.9	0.3	N/A	N/A	15.2	12.5	10.7	N/A	N/A	15.2	15.5	13.1	N/A	N/A
	-40 (-40)	Ft.	3.0	0.0	0.0	N/A	N/A	39.0	29.0	23.0	N/A	N/A	48.0	37.0	30.0	N/A	N/A
		M	0.9	0.0	0.0	N/A	N/A	11.9	8.8	7.0	N/A	N/A	14.6	11.3	9.1	N/A	N/A
60000	20 (-10)	Ft.	30.0	51.0	51.0	45.0	N/A	30.0	135.0	138.0	120.0	N/A	30.0	135.0	162.0	141.0	N/A
		M	9.1	15.5	15.5	13.7	N/A	9.1	41.1	42.1	36.6	N/A	9.1	41.1	49.4	43.0	N/A
	0 (-20)	Ft.	30.0	24.0	23.0	16.0	N/A	30.0	93.0	82.0	69.0	N/A	30.0	111.0	98.0	83.0	N/A
		M	9.1	7.3	7.0	4.9	N/A	9.1	28.3	25.0	21.0	N/A	9.1	33.8	29.9	25.3	N/A
	-20 (-30)	Ft.	18.0	11.0	9.0	1.0	N/A	30.0	65.0	56.0	44.0	N/A	30.0	79.0	68.0	55.0	N/A
		M	5.5	3.4	2.7	0.3	N/A	9.1	19.8	17.1	13.4	N/A	9.1	24.1	20.7	16.8	N/A
	-40 (-40)	Ft.	10.0	3.0	0.0	0.0	N/A	30.0	48.0	40.0	29.0	N/A	30.0	59.0	50.0	38.0	N/A
		M	3.0	0.9	0.0	0.0	N/A	9.1	14.6	12.2	8.8	N/A	9.1	18.0	15.2	11.6	N/A
80000	20 (-10)	Ft.	20.0	64.0	64.0	56.0	47.0	20.0	70.0	173.0	150.0	125.0	20.0	70.0	175.0	177.0	147.0
		M	6.1	19.5	19.5	17.1	14.3	6.1	21.3	52.7	45.7	38.1	6.1	21.3	53.3	53.9	44.8
	0 (-20)	Ft.	20.0	32.0	30.0	22.0	11.0	20.0	70.0	104.0	87.0	67.0	20.0	70.0	124.0	104.0	82.0
		M	6.1	9.8	9.1	6.7	3.4	6.1	21.3	31.7	26.5	20.4	6.1	21.3	37.8	31.7	25.0
	-20 (-30)	Ft.	20.0	17.0	14.0	6.0	0.0	20.0	70.0	71.0	57.0	40.0	20.0	70.0	86.0	71.0	52.0
		M	6.1	5.2	4.3	1.8	0.0	6.1	21.3	21.6	17.4	12.2	6.1	21.3	26.2	21.6	15.8
	-40 (-40)	Ft.	15.0	7.0	5.0	0.0	0.0	20.0	61.0	52.0	40.0	24.0	20.0	70.0	64.0	50.0	33.0
		M	4.6	2.1	1.5	0.0	0.0	6.1	18.6	15.8	12.2	7.3	6.1	21.3	19.5	15.2	10.1
100000	20 (-10)	Ft.	N/A	25.0	79.0	70.0	59.0	N/A	25.0	110.0	186.0	155.0	N/A	25.0	110.0	219.0	182.0
		M	N/A	7.6	24.1	21.3	18.0	N/A	7.6	33.5	56.7	47.2	N/A	7.6	33.5	66.8	55.5
	0 (-20)	Ft.	N/A	25.0	40.0	31.0	19.0	N/A	25.0	110.0	109.0	86.0	N/A	25.0	110.0	131.0	104.0
		M	N/A	7.6	12.2	9.4	5.8	N/A	7.6	33.5	33.2	26.2	N/A	7.6	33.5	39.9	31.7
	-20 (-30)	Ft.	N/A	23.0	21.0	13.0	0.0	N/A	25.0	91.0	74.0	54.0	N/A	25.0	110.0	90.0	68.0
		M	N/A	7.0	6.4	4.0	0.0	N/A	7.6	27.7	22.6	16.5	N/A	7.6	33.5	27.4	20.7
	-40 (-40)	Ft.	N/A	13.0	10.0	1.0	0.0	N/A	25.0	68.0	53.0	35.0	N/A	25.0	83.0	66.0	46.0
		M	N/A	4.0	3.0	0.3	0.0	N/A	7.6	20.7	16.2	10.7	N/A	7.6	25.3	20.1	14.0
120000	20 (-10)	Ft.	N/A	N/A	15.0	85.0	73.0	N/A	N/A	15.0	100.0	190.0	N/A	N/A	15.0	100.0	224.0
		M	N/A	N/A	4.6	25.9	22.3	N/A	N/A	4.6	30.5	57.9	N/A	N/A	4.6	30.5	68.3
	0 (-20)	Ft.	N/A	N/A	15.0	41.0	29.0	N/A	N/A	15.0	100.0	109.0	N/A	N/A	15.0	100.0	131.0
		M	N/A	N/A	4.6	12.5	8.8	N/A	N/A	4.6	30.5	33.2	N/A	N/A	4.6	30.5	39.9
	-20 (-30)	Ft.	N/A	N/A	15.0	20.0	7.0	N/A	N/A	15.0	94.0	71.0	N/A	N/A	15.0	114.0	88.0
		M	N/A	N/A	4.6	6.1	2.1	N/A	N/A	4.6	28.7	21.6	N/A	N/A	4.6	34.7	26.8
	-40 (-40)	Ft.	N/A	N/A	15.0	7.0	0.0	N/A	N/A	15.0	69.0	48.0	N/A	N/A	15.0	85.0	62.0
		M	N/A	N/A	4.6	2.1	0.0	N/A	N/A	4.6	21.0	14.6	N/A	N/A	4.6	25.9	18.9

* Not all families have these models.

* Pipe length (ft) specified for maximum pipe lengths located in unconditioned spaces. Pipes located in unconditioned space cannot exceed total allowable pipe length calculated from Table NO TAG or NO TAG.

† Insulation thickness based on R value of 3.5 per in.

MAXIMUM EQUIVALENT VENT LENGTH - FT. (M)

NOTE: Maximum Equivalent Vent Length (MEVL) includes standard and concentric vent termination and does NOT include elbows. Use Table 2 - Deductions from Maximum Equivalent Vent Length to determine allowable vent length for each application.

Table 1 – Maximum Equivalent Vent Length - Ft. (M)
0 to 4500 Ft. (0 to 1370 M) Altitude

Altitude FT (M)	Unit Size BTU/Hr	DIRECT VENT (2-PIPE) AND NON-DIRECT VENT (1-PIPE)									
		Vent Pipe Diameter (in.) [1]									
		1-1/2		2		2-1/2		3		4	
0 to 2000 (0 to 610)	40,000 [3]	50	(15.2)	210	(64.0)	250	(76.2)	NA [2]		NA	
	60,000	30	(9.1)	135	(41.1)	235	(71.6)	265	(80.8)	NA	
	80,000	20	(6.1)	70	(21.3)	175	(53.3)	235	(71.6)	265	(80.8)
	100,000	NA		25	(7.6)	110	(33.5)	235	(71.6)	265	(80.8)
	120,000	NA		NA		15	(4.6)	100	(30.5)	250	(76.2)
	140,000 [4]	NA		NA		10	(3.0)	90	(27.4)	210	(64.0)
2001 to 3000 (610 to 914)	40,000	45	(13.7)	198	(60.4)	232	(70.7)	NA		NA	
	60,000	27	(8.2)	127	(38.7)	222	(67.7)	250	(76.2)	NA	
	80,000	17	(5.2)	64	(19.5)	165	(50.3)	222	(67.7)	249	(75.9)
	100,000	NA		22	(6.7)	104	(31.7)	223	(68.0)	250	(76.2)
	120,000	NA		NA		11	(3.4)	93	(28.3)	237	(72.2)
	140,000 [4]	NA		NA		NA		80	(24.4)	185	(56.4)
3001 to 4000 (914 to 1219)	40,000	39	(11.9)	184	(56.1)	214	(65.2)	NA		NA	
	60,000	23	(7.0)	119	(36.3)	210	(64.0)	235	(71.6)	NA	
	80,000	15	(4.6)	59	(18.0)	155	(47.2)	210	(64.0)	232	(70.7)
	100,000	NA		19	(5.8)	98	(29.9)	211	(64.3)	236	(71.9)
	120,000	NA		NA		8	(2.4)	86	(26.2)	224	(68.3)
	140,000 [4]	NA		NA		NA		79	(24.1)	158	(48.2)
4001 to 4500 (1219 to 1370)	40,000	36	(11.0)	177	(53.9)	205	(62.5)	NA		NA	
	60,000	21	(6.4)	115	(35.1)	204	(62.2)	228	(69.5)	NA	
	80,000	14	(4.3)	56	(17.1)	150	(45.7)	202	(61.6)	224	(68.3)
	100,000	NA		17	(5.2)	94	(28.7)	205	(62.5)	229	(69.8)
	120,000	NA		NA		NA		83	(25.3)	217	(66.1)
	140,000 [4]	NA		NA		NA		69	(21.0)	146	(44.5)

NOTES: See notes at end of venting tables.
See Table 3 for altitudes over 4500 ft. (1370 M)

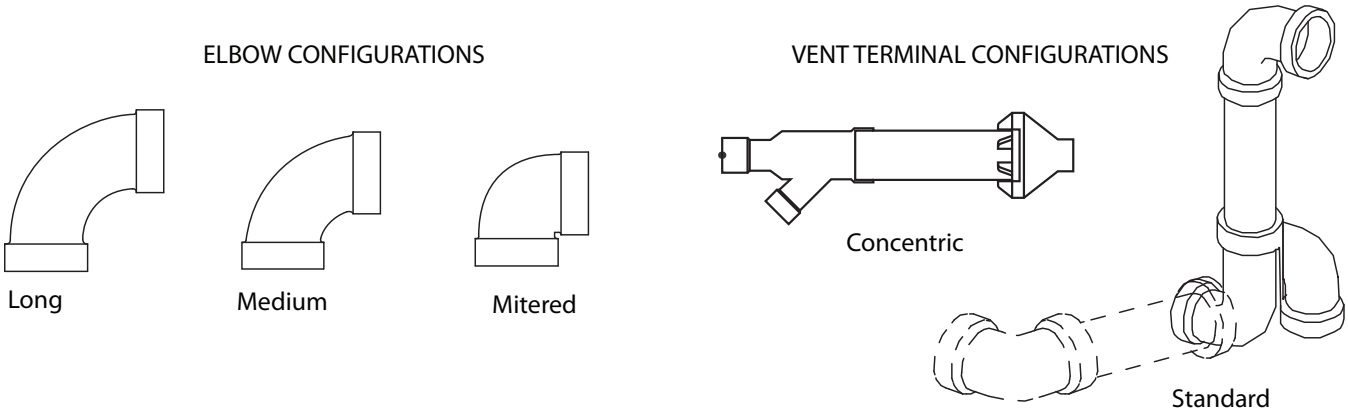

Table 2 – Deductions from Maximum Equivalent Vent Length - Ft. (M)

Pipe Diameter (in):	1-1/2		2		2-1/2		3		4	
Mitered 90º Elbow	8	(2.4)	8	(2.4)	8	(2.4)	8	(2.4)	8	(2.4)
Medium Radius 90º Elbow	5	(1.5)	5	(1.5)	5	(1.5)	5	(1.5)	5	(1.5)
Long Radius 90º Elbow	3	(0.9)	3	(0.9)	3	(0.9)	3	(0.9)	3	(0.9)
Mitered 45º Elbow	4	(1.2)	4	(1.2)	4	(1.2)	4	(1.2)	4	(1.2)
Medium Radius 45º Elbow	2.5	(0.8)	2.5	(0.8)	2.5	(0.8)	2.5	(0.8)	2.5	(0.8)
Long Radius 45º Elbow	1.5	(0.5)	1.5	(0.5)	1.5	(0.5)	1.5	(0.5)	1.5	(0.5)
Tee	16	(4.9)	16	(4.9)	16	(4.9)	16	(4.9)	16	(4.9)
Concentric Vent Termination	NA		0	(0.0)	NA		0	(0.0)	NA	
Standard Vent Termination	0	(0.0)	0	(0.0)	0	(0.0)	0	(0.0)	0	(0.0)

Venting System Length Calculations

The Total Equivalent Vent Length (TEVL) for **EACH** combustion air or vent pipe equals the length of the venting system, plus the equivalent length of elbows used in the venting system from Table 2.

Standard vent terminations or factory accessory concentric vent terminations count for zero deduction.

See vent system manufacturer's data for equivalent lengths of flexible vent pipe or other termination systems. **DO NOT ASSUME** that one foot of flexible vent pipe equals one foot of straight PVC/ABS DWV vent pipe.

Compare the Total Equivalent Vent Length to the Maximum Equivalent Vent Lengths in Tables 1 and 3.

Example 1

A direct-vent 60,000 Btuh furnace installed at 2100 ft. (640 M). Venting system includes, **FOR EACH PIPE**, 100 feet (30 M) of vent pipe, 95 feet (28 M) of combustion air inlet pipe, (3) 90° long radius elbows, (2) 45° long radius elbows and a factory accessory concentric vent kit.

Can this application use 2-in. (50 mm ND) PVC/ABS DWV vent piping?

Measure the required linear length of air inlet and vent pipe; insert the longest of the two here:					100 ft	Use length of the longer of the vent or air inlet piping system
Add equiv length of (3) 90º long-radius elbows (use the highest number of elbows for either the vent or inlet pipe)	3	x	3 ft	=	9 ft.	From Table 2
Add equiv length of (2) 45º long-radius elbows (use the highest number of elbows for either the vent or inlet pipe)	2	x	1.5 ft	=	3 ft.	From Table 2
Add equiv length of of vent termination					0 ft.	From Table 2
Add correction for flexible vent pipe, if any					0 ft.	From Vent Manufacturer's instructions; zero for PVC/ABS DWV
Total Equivalent Vent Length (TEVL)					112 ft.	Add all of the above lines
Maximum Equivalent Vent Length (MEVL)					127 ft.	For 2" pipe from Table 1
Is TEVL less than MEVL?					**YES**	**Therefore, 2" pipe may be used**

Example 2

A direct-vent 60,000 Btuh furnace installed at 2100 ft. (640 M) Venting system includes, **FOR EACH PIPE**, 100 feet (30 M) of vent pipe, 95 feet (28 M) of combustion air inlet pipe, (3) 90° long radius elbows, and a polypropylene concentric vent kit. Also includes 20 feet (6 M) of flexible polypropylene vent pipe, included within the 100 feet (30 M) of vent pipe.

Assume that one meter of flexible 60 mm or 80 mm polypropylene pipe equals 1.8 meters of PVC/ABS pipe. **VERIFY FROM VENT MANUFACTURER'S INSTRUCTIONS.**

Can this application use 60 mm (O.D.) polypropylene vent piping? If not what size piping can be used?

Measure the required linear length of air inlet and vent pipe; insert the longest of the two here:					100 ft	Use length of the longer of the vent or air inlet piping system
Add equiv length of (3) 90º long-radius elbows (use the highest number of elbows for either the vent or inlet pipe)	3	x	3 ft	=	9 ft.	From Vent Manufacturer's instructions
Add equiv length of (2) 45º long-radius elbows (use the highest number of elbows for either the vent or inlet pipe)	0	x		=	0 ft.	From Vent Manufacturer's instructions
Add equiv length of of vent termination	9 M	x	3 ft/M	=	18 ft.	From Vent Manufacturer's instructions
Add correction for flexible vent pipe, if any	1.8	x	20 ft	=	36 ft.	From Vent Manufacturer's instructions
Total Equivalent Vent Length (TEVL)					163 ft.	Add all of the above lines
Maximum Equivalent Vent Length (MEVL)					127 ft.	For 2" pipe from Table 1
Is TEVL less than MEVL?					**NO**	**Therefore, 60mm pipe may NOT be used; try 80 mm**
Maximum Equivalent Vent Length (MEVL)					250 ft.	For 3" pipe from Table 1
Is TEVL less than MEVL?					**YES**	**Therefore, 80 mm pipe may be used**

MAXIMUM EQUIVALENT VENT LENGTH - FT. (M) (CONTINUED)

NOTE: Maximum Equivalent Vent Length (MEVL) includes standard and concentric vent termination and does NOT include elbows. Use Table 2 - Deductions from Maximum Equivalent Vent Length to determine allowable vent length for each application.

Table 3 – Maximum Equivalent Vent Length - Ft. (M)
4501 to 10,000 Ft. (0 to 1370 M) Altitude

Altitude FT (M) [5]	Unit Size	DIRECT VENT (2-PIPE) AND SINGLE-PIPE									
		Vent Pipe Diameter (in.) [1]									
		1-1/2		2		2-1/2		3		4	
4501 to 5000 (1370 to 1524)	40,000	33	(10.1)	171	(52.1)	196	(59.7)	NA [2]		NA	
	60,000	20	(6.1)	111	(33.8)	198	(60.4)	221	(67.4)	NA	
	80,000	13	(4.0)	54	(16.5)	146	(44.5)	195	(59.4)	216	(65.8)
	100,000	NA		16	(4.9)	91	(27.7)	200	(61.0)	222	(67.7)
	120,000	NA		NA		NA		80	(24.4)	211	(64.3)
	140,000 [4]	NA		NA		NA		60	(18.3)	134	(40.8)
5001 to 6000 (1524 to 1829)	40,000	27	(8.2)	158	(48.2)	179	(54.6)	NA		NA	
	60,000	16	(4.9)	103	(31.4)	186	(56.7)	207	(63.1)	NA	
	80,000	11	(3.4)	49	(14.9)	137	(41.8)	183	(55.8)	200	(61.0)
	100,000	NA		12	(3.7)	85	(25.9)	188	(57.3)	208	(63.4)
	120,000	NA		NA		NA		74	(22.6)	199	(60.7)
	140,000 [4]	NA		NA		NA		50	(15.2)	109	(33.2)
6001 to 7000 (1829 to 2134)	40,000	21	(6.4)	145	(44.2)	162	(49.4)	NA		NA	
	60,000	13	(4.0)	96	(29.3)	174	(53.0)	194	(59.1)	NA	
	80,000	NA		44	(13.4)	120	(36.6)	171	(52.1)	185	(56.4)
	100,000	NA		10	(3.0)	79	(24.1)	178	(54.3)	195	(59.4)
	120,000	NA		NA		NA		68	(20.7)	187	(57.0)
	140,000 [4]	NA		NA		NA		41	(12.5)	87	(26.5)
7001 to 8000 (2134 to 2438)	40,000	15	(4.6)	133	(40.5)	146	(44.5)	NA		NA	
	60,000	10	(3.0)	89	(27.1)	163	(49.7)	181	(55.2)	NA	
	80,000	NA		40	(12.2)	120	(36.6)	159	(48.5)	170	(51.8)
	100,000	NA		NA		73	(22.3)	167	(50.9)	182	(55.5)
	120,000	NA		NA		NA		62	(18.9)	175	(53.3)
	140,000 [4]	NA		NA		NA		32	(9.8)	63	(19.2)
8001 to 9000 (2438 to 2743)	40,000	10	(3.0)	121	(36.9)	130	(39.6)	NA		NA	
	60,000	7	(2.1)	82	(25.0)	152	(46.3)	168	(51.2)	NA	
	80,000	NA		35	(10.7)	111	(33.8)	148	(45.1)	156	(47.5)
	100,000	NA		NA		67	(20.4)	157	(47.9)	170	(51.8)
	120,000	NA		NA		NA		56	(17.1)	164	(50.0)
	140,000 [4]	NA		NA		NA		23	(7.0)	42	(12.8)
9001 to 10,000 (2743 to 3048)	40,000	5	(1.5)	110	(33.5)	115	(35.1)	NA		NA	
	60,000	NA		76	(23.2)	142	(43.3)	156	(47.5)	NA	
	80,000	NA		31	(9.4)	103	(31.4)	137	(41.8)	142	(43.3)
	100,000	NA		NA		62	(18.9)	147	(44.8)	157	(47.9)
	120,000	NA		NA		NA		51	(15.5)	153	(46.6)
	140,000 [4]	NA		NA		NA		16	(4.9)	20	(6.1)

NOTES:
1. Use only the vent pipe sizes shown for each furnace. It is NOT necessary to choose the smallest diameter pipe possible for venting.
2. NA – Not allowed. Pressure switch will not close, or flame disturbance may result.
3. Total equivalent vent lengths under 10' for 40,000 BTUH furnaces from 0 to 2000 ft. (0 to 610 M) above sea level require use of an outlet choke plate . **Failure to use an outlet choke when required may result in flame disturbance or flame sense lockout.**
4. Not all furnace families include 140,000 BTUH input models.
5. Vent sizing for Canadian installations over 4500 ft.(1370 M) above sea level are subject to acceptance by local authorities having jurisdiction.
6. Size both the combustion air and vent pipe independently, then use the larger size for both pipes.
7. Assume the two 45° elbows equal one 90° elbow. Wide radius elbows are desirable and may be required in some cases.
8. Elbow and pipe sections within the furnace casing and at the vent termination should not be included in vent length or elbow count.
9. The minimum pipe length is 5 ft. (2 M) linear feet (meters) for all applications.
10. Use 3–in. (76 mm) diameter vent termination kit for installations requiring 4–in. (102 mm) diameter pipe.

RETURN AIR TEMPERATURE

This furnace is designed for continuous return-air minimum temperature of 60°F (15°C) db or intermittent operation down to 55°F (13°C) db such as when used with a night setback thermometer. Return-air temperature must not exceed 80°F (27°C) db. Failure to follow these return air limits may affect reliability of heat exchangers, motors and controls.

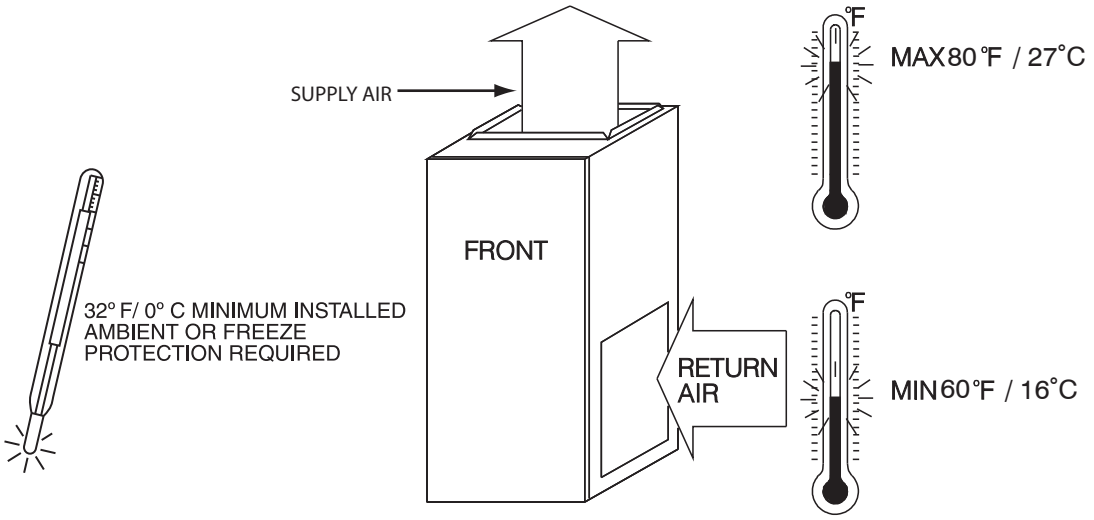

A10490

MINIMUM CLEARANCES TO COMBUSTIBLE MATERIALS

POSITION	CLEARANCE
Rear	0 (0 mm)
Front (Combustion air openings in furnace and in structure)	1 in. (25 mm)
Required for service**	24 in. (610 mm)*
All Sides of Supply Plenum**	1 in. (25 mm)
Sides	0 (0 mm)
Vent	0 (0 mm)
Top of Furnace	1 in. (25 mm)

* Recommended
**Consult your local building codes

COMBUSTION-AIR PIPE FOR NON-DIRECT (1-PIPE) VENT APPLICATION

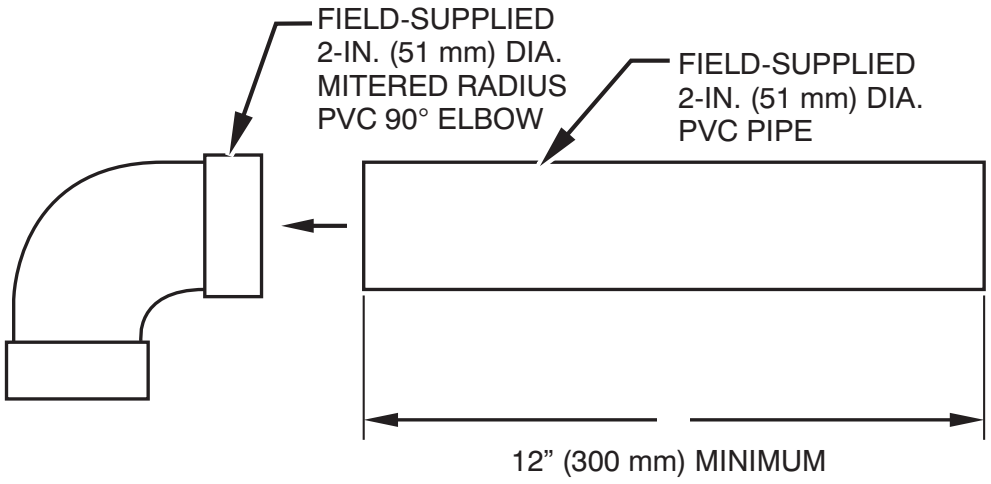

A12376

NOTE: See Installation Instructions for specific venting configurations.

PG95XAT

DOWNFLOW SUBBASE

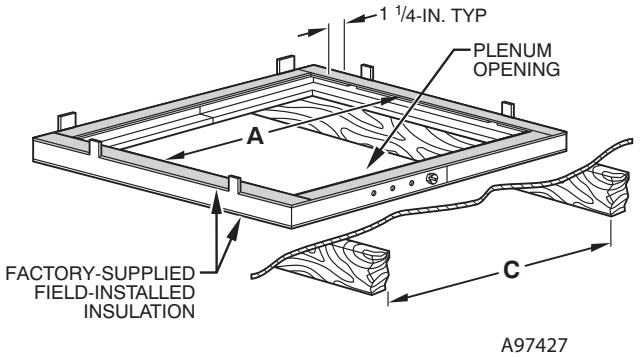

Assembled

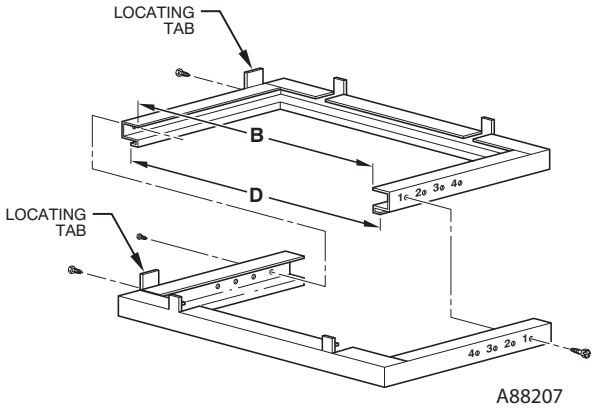

Disassembled

PG95XAT

DIMENSIONS (IN. / MM)						
FURNACE CASING WIDTH	FURNACE IN DOWNFLOW APPLICATION	PLENUM OPENING*		FLOOR OPENING		HOLE NO. FOR WIDTH ADJUSTMENT
		A	B	C	D	
14–3/16 (360)	Furnace with or without Cased Coil Assembly or Coil Box	11–3/16 (322)	19 (483)	13–7/16 (341)	20–5/8 (600)	4
17–1/2 (445)	Furnace with or without Cased Coil Assembly or Coil Box	15–1/8 (384)	19 (483)	16–3/4 (426)	20–5/8 (600)	3
21 (533)	Furnace with or without Cased Coil Assembly or Coil Box	18–5/8 (396)	19 (483)	20–1/4 (514)	20–5/8 (600)	2
24–1/2 (622)	Furnace with or without Cased Coil Assembly or Coil Box	22–1/8 (562)	19 (483)	23–3/4 (603)	20–5/8 (600)	1

*The plenum should be constructed 1/4–in. (6 mm) smaller in width and depth than the plenum dimensions shown above.

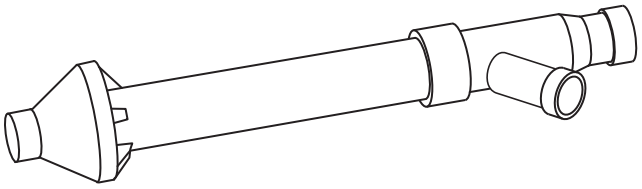

Concentric Vent Kit

A93086

A concentric vent kit allows vent and combustion-air pipes to terminate through a single exit in a roof or side wall. One pipe runs inside the other allowing venting through the inner pipe and combustion air to be drawn in through the outer pipe.

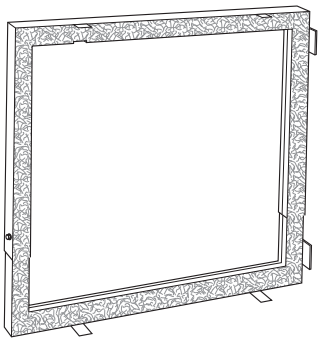

Downflow Subbase

A88202

One base fits all furnace sizes. The base is designed to be installed between the furnace and a combustible floor when no coil box is used or when a coil box other than a Payne cased coil is used. It is CSA design certified for use with Payne branded furnaces when installed in downflow applications.

TYPICAL WIRING SCHEMATIC

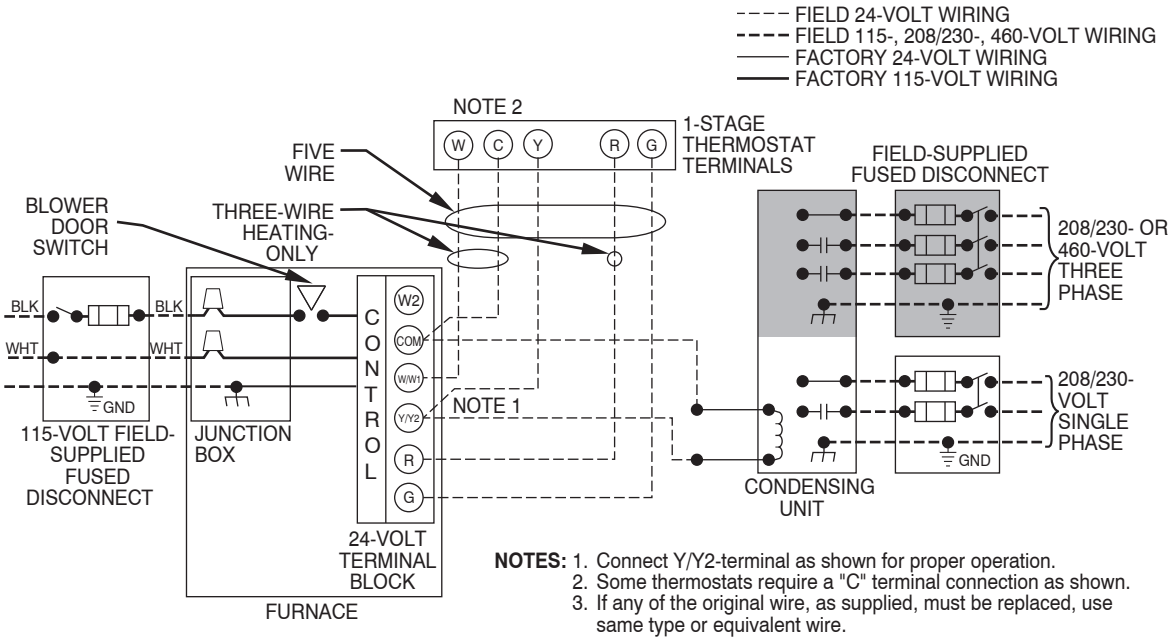

NOTES: 1. Connect Y/Y2-terminal as shown for proper operation.
2. Some thermostats require a "C" terminal connection as shown.
3. If any of the original wire, as supplied, must be replaced, use same type or equivalent wire.

A11401

PG95XAT

DIMENSIONAL DRAWING

NOTES:
1. Doors may vary by model.
2. Minimum return-air openings at furnace, based on metal duct. If flex duct is used, see flex duct manufacturer's recommendations for equivalent diameters.
   a. For 800 CFM-16-in. (406 mm) round or 14 1/2 x 12-in. (368 x 305 mm) rectangle.
   b. For 1200 CFM-20-in. (508 mm) round or 14 1/2 x 19 1/2-in. (368 x 495 mm) rectangle.
   c. For 1600 CFM-22-in. (559 mm) round or 14 1/2 x 22 1/16-in. (368 x 560mm) rectangle.
   d. Return air above 1800 CFM at 0.5 in. w.c. ESP on 24.5" casing, requires one of the following configurations: 2 sides, 1 side and a bottom or bottom only. See Air Delivery table in this document for specific use to allow for sufficient airflow to the furnace.
3. Vent and Combustion air pipes through blower compartment must use accessory "Vent Kit - Through the Cabinet". See accessory list for current part number.

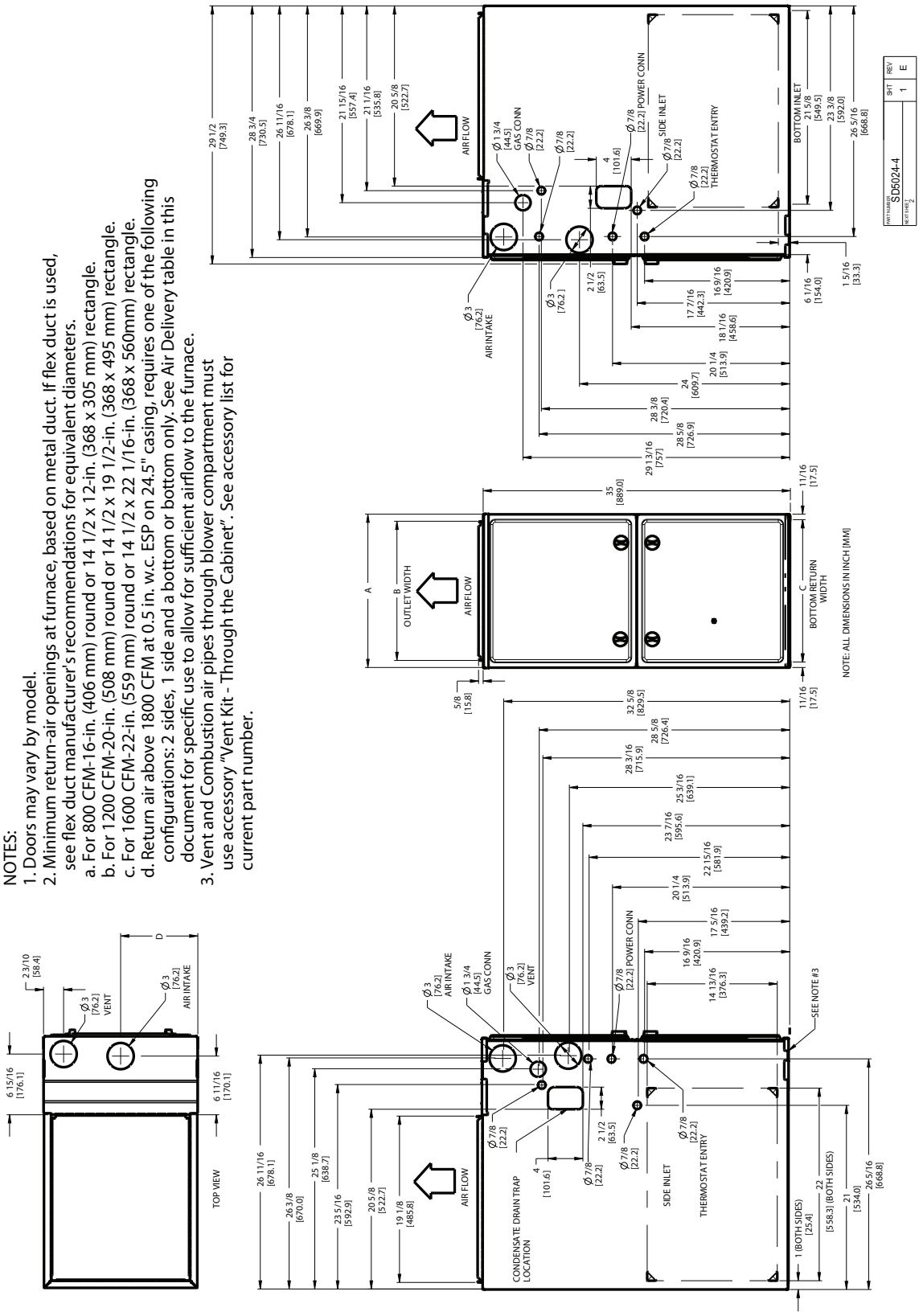

A12267

PG95XAT FURNACE SIZE	A CABINET WIDTH	B OUTLET WIDTH	C BOTTOM INLET WIDTH	D AIR INTAKE	SHIP WT. LB (KG)
30040	14 – 3/16 (361)	12 – 1/2 (319)	12 – 9/16 (322)	7 – 1/8 (181)	125.0 (56.2)
42060	17 – 1/2 (445)	15 – 7/8 (403)	16 (406)	8 – 3/4 (222)	146.0 (65.7)
48080					156.0 (70.2)
60080	21 (533)	19 – 3/8 (492)	19 – 1/2 (495)	10 – 1/2 (267)	160.5 (73.0)
60100					170.5 (76.7)
66120	24 – 1/2 (622)	22 – 7/8 (581)	23 (584)	12 – 1/4 (311)	194.5 (87.5)

GUIDE SPECIFICATIONS

General

System Description

Furnish a _____ 4-way multipoise gas-fired condensing furnace for use with natural gas or propane (factory-authorized conversion kit required for propane).

Quality Assurance

Unit will be designed, tested and constructed to the current ANSI Z 21.47/CSA 2.3 design standard for gas-fired central furnaces.

Unit will be third party certified by CSA to the current ANSI Z 21.47/CSA 2.3 design standard for gas-fired central furnaces. Unit will carry the CSA Blue Star® and Blue Flame® labels. Unit efficiency testing will be performed per the current DOE test procedure as listed in the Federal Register.

Unit will be certified for capacity and efficiency and listed in the latest AHRI Consumer's Directory of Certified Efficiency Ratings.

Unit will carry the current Federal Trade Commission Energy Guide efficiency label.

Delivery, Storage, and Handling

Unit will be shipped as single package only and is stored and handled per unit manufacturer's recommendations.

Warranty (for inclusion by specifying engineer)

U.S. and Canada only. Warranty certificate available upon request.

Equipment

Blower Wheel and ECM Blower Motor

Galvanized blower wheel shall be centrifugal type, statically and dynamically balanced. Blower motor of ECM type shall be permanently lubricated with sealed ball bearings, of _____hp, and have multiple speeds from 600-1200 RPM operating only when motor inputs are provided. Blower motor shall be direct drive and soft mounted to the blower housing to reduce vibration transmission.

Filters

Furnace shall have reusable-type filters. Filter shall be _____ in. (mm) X _____ in. (mm). An accessory highly efficient Media Filter is available as an option. _____ Media Filter.

Casing

Casing shall be of .030 in. thickness minimum, pre-painted galvanized steel.

Draft Inducer Motor

Draft inducer motor shall be two-speed PSC design.

Primary Heat Exchangers

Primary heat exchangers shall be 3-Pass corrosion-resistant aluminized steel of fold-and-crimp sectional design and applied operating under negative pressure.

Secondary Heat Exchangers

Secondary heat exchangers shall be of a stainless steel flow-through of fin-and-tube design and applied operating under negative pressure.

Controls

Controls shall include a micro-processor-based integrated electronic control board with at least 16 service troubleshooting codes displayed via diagnostic flashing LED light on the control, a self-test feature that checks all major functions of the furnace, and a replaceable automotive-type circuit protection fuse. Multiple operational settings available, including blower speeds for low heat, high heat, low cooling, high cooling and continuous fan. Continuous fan speed may be adjusted from the thermostat.

Operating Characteristics

Heating capacity shall be _____ Btuh input; _____ Btuh output capacity.

Fuel Gas Efficiency shall be _____ AFUE.

Air delivery shall be _____ cfm minimum at 0.50 in. W.C.. external static pressure.

Dimensions shall be: depth_____in. (mm); width _____in. (mm); height_____in. (mm) (casing only). Height shall be _____in. (mm) with A/C coil and _____in. (mm) overall with plenum.

Electrical Requirements

Electrical supply shall be 115 volts, 60 Hz, single-phase (nominal). Minimum wire size shall be _____AWG; maximum fuse size of HACR-type designated circuit breaker shall be _____ amps.

Special Features

Refer to section of the product data identifying accessories and descriptions for specific features and available enhancements.

©2012 Payne Heating & Cooling Systems • 7310 W. Morris St. • Indianapolis, IN 46231 Edition Date: 09/12

Catalog No: SS−PG95XAT−04

Manufacturer reserves the right to change, at any time, specifications and designs without notice and without obligations.

Replaces: SS−PG95XAT−03