24ABB3
Base™ 13 Air Conditioner with Puron® Refrigerant

Carrier®
Turn to the Experts.℠

Product Data

Puron™
the environmentally sound refrigerant

Carrier's Air Conditioners with Puron® refrigerant provide a collection of features unmatched by any other family of equipment. The 24ABB has been designed utilizing Carrier's Puron refrigerant. The environmentally sound refrigerant allows you to make a responsible decision in the protection of the earth's ozone layer.

As an Energy Star® Partner, Carrier Corporation has determined that this product meets the Energy Star® guidelines for energy efficiency. Refer to the combination ratings in the Product Data for system combinations that meet Energy Star® guidelines.

NOTE: Ratings contained in this document are subject to change at any time. Always refer to the AHRI directory (www.ahridirectory.org) for the most up-to-date ratings information.

INDUSTRY LEADING FEATURES / BENEFITS

Efficiency

- 13 - 14 SEER/10.55 - 12 EER
- Microtube Technology™ refrigeration system
- Indoor air quality accessories available

Sound

- Sound level as low as 75 dBA
- Sound level as low as 74 dBA with accessory sound blanket

Comfort

- System supports Thermidistat™ or standard thermostat controls

Reliability

- Puron® refrigerant - environmentally sound, won't deplete the ozone layer and low lifetime servce cost.
- Scroll compressor
- Internal pressure relief valve
- Internal thermal overload
- Filter drier
- Balanced refrigeration system for maximum reliability

Durability

WeatherArmor™ protection package:

- Solid, durable sheet metal construction
- Dense wire coil guard
- Baked-on, complete outer coverage, powder paint

Applications

- Long-line - up to 250 feet (76.20 m) total equivalent length, up to 200 feet (60.96 m) condenser above evaporator, or up to 80 ft. (24.38 m) evaporator above condenser (See Longline Guide for more information.)
- Low ambient (down to -20°F/-28.9°C)) with accessory kit

MODEL NUMBER NOMENCLATURE

1	2	3	4	5	6	7	8	9	10	11	12	13
N	N	A	A	A/N	N	N	N	A/N	A/N	A/N	N	N
2	**4**	**A**	**B**	**B**	**3**	**3**	**6**	**A**	**0**	**0**	**3**	0
Product Series		Product Family	Tier	Major Series	SEER	Cooling Capacity		Variations	Open	Open	Voltage	Series
24=AC		A=RES AC	B=Base	B=Puron	3=13 SEER			A=Standard	0=Not Defined	0=Not Defined	3=208/230–1	0 = Original Series

24ABB3

Puron™ the environmentally sound refrigerant

ARI PERFORMANCE CERTIFIED™ ARI Standard 210/240 Unitary Air Conditioners

ISO 9001:2000 QMI REGISTERED

c UL US

Energy ENERGY STAR

This product has been designed and manufactured to meet Energy Star® criteria for energy efficiency when matched with appropriate coil components. However, proper refrigerant charge and proper air flow are critical to achieve rated capacity and efficiency. Installation of this product should follow all manufacturing refrigerant charging and air flow instructions. **Failure to confirm proper charge and air flow may reduce energy efficiency and shorten equipment life.**

STANDARD FEATURES

Feature	**18**	**24**	**30**	**36**	**42**	**48**	**60**
Puron Refrigerant	X	X	X	X	X	X	X
Maximum SEER	14.50	14.25	15.0	14.0	14.0	14.0	13.5
Scroll Compressor	X	X	X	X	X	X	X
Dense Wire Coil Guard	X	X	X	X	X	X	X
Field Installed Filter Drier	X	X	X	X	X	X	X
Front Seating Service Valves	X	X	X	X	X	X	X
Internal Pressure Relief Valve	X	X	X	X	X	X	X
Internal Thermal Overload	X	X	X	X	X	X	X
Long Line capability	X	X	X	X	X	X	X
Low Ambient capability with Kit	X	X	X	X	X	X	X

X = Standard

PHYSICAL DATA

UNIT SIZE–VOLTAGE, SERIES	18–31	24–31	30–31	36–31	42–30	48–31	60–31
Operating Weight lb (kg)	107 (48.5)	110 (49.9)	111 (50.3)	141 (64.0)	190 (86.2)	186 (84.4)	190 (86.2)
Shipping Weight lb (kg)	130 (59.0)	134 (60.8)	136 (61.7)	170 (77.1)	218 (98.9)	224 (101.6)	226 (102.5)
Compressor Type	Scroll						
REFRIGERANT	Puron® (R–410A)						
Control	TXV (Puron® Hard Shutoff)						
Charge lb (kg)	3.50 (1.60)	3.80 (1.72)	4.1 (1.86)	5.34 (2.42)	5.84 (2.65)	7.00 (3.18)	8.19 (3.71)
COND FAN	Propeller Type, Direct Drive						
Air Discharge	Vertical						
Air Qty (CFM)	1792	2218	2218	2954	3167	3644	3129
Motor HP	1/12	1/10	1/10	1/4	1/5	1/4	1/4
Motor RPM	1100	1100	1100	1100	1100	1100	800
COND COIL							
Face Area (Sq ft)	8.4	8.4	9.80	13.13	17.25	19.40	12.93
Fins per In.	20	25	25	25	25	25	20
Rows	1	1	1	1	1	1	2
Circuits	3	3	3	3	4	5	5
VALVE CONNECT. (In. ID)							
Vapor	3/4	3/4	3/4	7/8	7/8	7/8	1–1/8
Liquid	3/8						
REFRIGERANT TUBES (In. OD)							
Rated Vapor*	3/4	3/4	7/8	7/8	1–1/8	1–1/8	1–1/8
Liquid	3/8						

* Units are rated with 25 ft (7.6 m) of lineset length. See Vapor Line Sizing and Cooling Capacity Loss table when using other sizes and lengths of lineset.
Note: See unit Installation Instruction for proper installation.

VAPOR LINE SIZING AND COOLING CAPACITY LOSS

LONG LINE APPLICATION: An application is considered ”Long line” when the total equivalent tubing length exceeds 80 ft. (24.38 m) or when there is more than 20 ft. (6.09 m) vertical separation between indoor and outdoor units. These applications require additional accessories and system modifications for reliable system operation. The maximum allowable total equivalent length is up to 250 ft. (76.2 m). The maximum vertical separation is 200 ft. (60.96 m) when outdoor unit is above indoor unit, and up to 80 ft. (24.38 m) when the outdoor unit is below the indoor unit. Refer to Accessory Usage Guideline below for required accessories. See Longline Application Guideline for required piping and system modifications. Also, refer to the table below for the vapor tube diameters based on the total length to minimize the cooling capacity loss.

Unit Nominal Size (Btuh)	Maximum Liquid Line Diameters (In. OD)	Vapor Line Diameters (In. OD)	Cooling Capacity Loss (%) Total Equivalent Line Length ft. (m)								
			Standard Application		Long Line Application Requires Accessories						
			26–50 (7.9–15.2)	51–80 (15.5–24.4)	81–100 (24.7–30.5)	101–125 (30.8–38.1)	126–150 (38.4–45.7)	151–175 (46.0–53.3)	176–200 (53.6–61.0)	201–225 (61.3–68.6)	226–250 (68.9–76.2)
18000 1 Stage Puron AC	3/8	1/2	1	2	3	5	6	7	8	9	11
		5/8	0	1	1	1	2	2	2	3	3
		3/4	0	0	0	0	1	1	1	1	1
24000 1 Stage Puron AC	3/8	5/8	0	1	2	2	3	3	4	5	5
		3/4	0	0	1	1	1	1	1	2	2
		7/8	0	0	0	0	0	1	1	1	1
30000 1 Stage Puron AC	3/8	5/8	1	2	3	3	4	5	6	7	8
		3/4	0	0	1	1	1	2	2	2	3
		7/8	0	0	0	0	1	1	1	1	1
36000 1 Stage Puron AC	3/8	5/8	1	2	4	5	6	8	9	10	12
		3/4	0	1	1	2	2	3	3	4	4
		7/8	0	0	0	1	1	1	1	2	2
42000 1 Stage Puron AC	3/8	3/4	0	1	2	2	3	4	4	5	6
		7/8	0	0	1	1	1	2	2	2	3
		1 1/8	0	0	0	0	0	0	0	0	0
48000 1 Stage Puron AC	3/8	3/4	0	1	2	3	4	5	5	6	7
		7/8	0	0	1	1	2	2	2	3	3
		1 1/8	0	0	0	0	0	0	0	1	1
60000 1 Stage Puron AC	3/8	3/4	1	2	4	5	6	7	9	10	11
		7/8	0	1	2	2	3	4	4	5	5
		1 1/8	0	0	0	1	1	1	1	1	1

Applications in this area are long line. Accessories are required as shown recommended on Long Line Application Guidelines

Applications in this area may have height restrictions that limit allowable total equivalent length, when outdoor unit is below indoor unit See Long Line Application Guidelines

ACCESSORY THERMOSTATS

THERMOSTAT / SUBBASE PKG.	DESCRIPTION
TP–PRH–01	Programmable Thermidistat
TP–NRH–01	Non–programmable Thermidistat
TB–PAC–01	Base Series Programmable AC Stat
TB–NAC–01	Base Series Non–programmable AC Stat
TSTATCCPRH01–B	Thermidistat Control – Programmable / Non–Programmable Thermostat with Humidity control
TSTATCCPAC01–B	Thermostat – Auto Changeover, 7–Day Programmable, °F/°C, 1–Stage Heat, 1–Stage Cool
TSTATCCNAC01–C	Thermostat – Auto Changeover, Non–Programmable, °F/°C, 1–Stage Heat, 1–Stage Cool
TSTATCCBAC01–B	Builder's Thermostat – Manual Changeover, Non–Programmable, °F/°C, 1–Stage Heat, 1–Stage Cool
TSTATCCSEN01–B	Outdoor Air Temperature Sensor
TSTATXXBBP01	Backplate for Builder's Thermostat
TSTATXXNBP01	Backplate for Non–Programmable Thermostat
TSTATXXPBP01	Backplate for Programmable Thermostat
TSTATXXCNV10	Thermostat Conversion Kit (4 to 5 wires) – 10 Pack

ACCESSORIES

KIT NUMBER	DESCRIPTION	Size – Voltage & Series						
		18–31	24–31	30–31	36–31	42–30	48–31	60–31
KAAFT0101AAA	FREEZE THERMOSTAT	X	X	X	X	X	X	X
KAATD0101TDR	TIME DELAY RELAY	X	X	X	X	X	X	X
KSALA0301410	LOW AMBIENT PSW	X	X	X	X	X	X	X
KSALA0601AAA†	MOTORMASTER 230V	X	X	X	X	X	X	X
HC32GE234	MOTOR FAN BALL BEARING	X						
HC34GE239	MOTOR FAN BALL BEARING		X	X				
HC40GE226	MOTOR FAN BALL BEARING				X		X	
HC38GE219	MOTOR FAN BALL BEARING					X		
HC40GE225	MOTOR FAN BALL BEARING							X
HC40GE228	MOTOR FAN BALL BEARING							
KSAHS1701AAA	HARD START (CAP / RELAY)	X	X	X	X	X	X	X
KSACY0101AAA	CYCLE PROTECTOR	X	X	X	X	X	X	X
KSASF0101AAA	SUPPORT FEET	X	X	X	X	X	X	X
KAACS0201PTC	START ASSIST PTC	X	X	X	X	X	X	X
KAALS0201LLS	LIQUID LINE SOLENOID	X	X	X	X	X	X	X
KAAWS0101AAA	WINTER START	X	X	X	X	X	X	X
KAACH1201AAA	CRANKCASE HTR					X	X	X
KAACH1401AAA	CRANKCASE HTR	X	X	X	X			
KSATX0201PUR	TXV PURON HSO	X	X	X				
KSATX0301PUR	TXV PURON HSO				X	X		
KSATX0401PUR	TXV PURON HSO						X	
KSATX0501PUR	TXV PURON HSO							X
KSASH0601COP	SOUND HOOD	X	X	X	X	X	X	
KSASH2101COP	SOUND HOOD							X
KAALP0401PUR	LOW PRESSURE SWITCH	X	X	X	X	X	X	X
KAAHI0501PUR	HIGH PRESSURE SWITCH	X	X	X	X	X	X	X

† Required accessories include ball bearing fan motor, compressor start assist (CAP / Relay), crankcase heater, evaporator freeze stat, hard shut–off TXV.
X = Accessory

ACCESSORY USAGE GUIDELINE

ACCESSORY	REQUIRED FOR LOW–AMBIENT COOLING APPLICATIONS (Below 55°F/12.8°C)	REQUIRED FOR LONG LINE APPLICATIONS* (Over 80 ft./24.38 m)	REQUIRED FOR SEA COAST APPLICATIONS (Within 2 miles/3.22 km)
Ball Bearing Fan Motor	Yes†	No	No
Compressor Start Assist Capacitor and Relay	Yes	Yes	No
Crankcase Heater	Yes	Yes	No
Evaporator Freeze Thermostat	Yes	No	No
Hard Shut–Off TXV	Yes	Yes	Yes
Liquid Line Solenoid Valve	No	No	No
Motor Master® Control or Low–ambient Pressure Switch	Yes	No	No
Support Feet	Recommended	No	Recommended
Winter Start Control	Yes	No	No

* For tubing line sets between 80 and 200 ft. (24.38 and 60.96 m) and/or 20 ft. (6.09 m) vertical differential, refer to Residential Split–System Longline Application Guideline.

† Required for Low–Ambient Controller (full modulation feature) MotorMaster® Control.

Accessory Description and Usage (Listed Alphabetically)

1. Ball-Bearing Fan Motor

A fan motor with ball bearings which permits speed reduction while maintaining bearing lubrication.

Usage Guideline:

Required on all units when MotorMaster® is used.

2. Compressor Start Assist - Capacitor and Relay

Start capacitor and relay gives a ”hard” boost to compressor motor at each start up.

Usage Guideline:

Required for reciprocating compressors in the following applications:

- Long line
- Low ambient cooling
- Hard shut off expansion valve on indoor coil
- Liquid line solenoid on indoor coil

Required for single-phase scroll compressors in the following applications:

- Long line
- Low ambient cooling

Suggested for all compressors in areas with a history of low voltage problems.

3. Compressor Start Assist — PTC Type

Solid state electrical device which gives a ”soft” boost to the compressor at each start-up.

Usage Guideline:

Suggested in installations with marginal power supply.

4. Crankcase Heater

An electric resistance heater which mounts to the base of the compressor to keep the lubricant warm during off cycles. Improves compressor lubrication on restart and minimizes the chance of liquid slugging.

Usage Guideline:

Required in low ambient cooling applications.

Required in long line applications.

Suggested in all commercial applications.

5. Cycle Protector

The cycle protector is designed to prevent compressor short cycling. This control provides an approximate 5-minute delay after power to the compressor has been interrupted for any reason, including power outage, protector control trip, thermostat jiggling, or normal cycling.

6. Evaporator Freeze Thermostat

An SPST temperature-actuated switch that stops unit operation when evaporator reaches freeze-up conditions.

Usage Guideline:

Required when low ambient kit has been added.

7. Low-Ambient Pressure Switch Kit

A long life pressure switch which is mounted to outdoor unit service valve. It is designed to cycle the outdoor fan motor in order to maintain head pressure within normal operating limits (approximately 100 psig to 225 psig). The control will maintain working head pressure at low-ambient temperatures down to 0°F (-18°C) when properly installed.

Usage Guideline:

A Low-Ambient Pressure Switch or MotorMaster® Low-Ambient Controller must be used when cooling operation is used at outdoor temperatures below 55°F (12.8°C).

8. MotorMaster® Low-Ambient Controller

A fan-speed control device activated by a temperature sensor, designed to control condenser fan motor speed in response to the saturated, condensing temperature during operation in cooling mode only. For outdoor temperatures down to -20°F (-28.9°C), it maintains condensing temperature at 100°F ±10°F (37.8°C ± 5.5°C).

Usage Guideline:

A MotorMaster® Low Ambient Controller or Low-Ambient Pressure Switch must be used when cooling operation is used at outdoor temperatures below 55°F (12.8°C).

Suggested for all commercial applications.

9. Outdoor Air Temperature Sensor

Designed for use with Carrier Thermostats listed in this publication. This device enables the thermostat to display the outdoor temperature. This device also

is required to enable special thermostat features such as auxiliary heat lock out.

Usage Guideline:

Suggested for all Carrier thermostats listed in this publication.

Accessory Description and Usage (Listed Alphabetically) (Continued)

10. Sound Hood

Wraparound sound reducing cover for the compressor. Reduces the sound level by about 2 dBA.

Usage Guideline:

Suggested when unit is installed closer than 15 ft (4.57 m) to quiet areas, bedrooms, etc.

Suggested when unit is installed between two houses less than 10 ft (3.05 m) apart.

11. Support Feet

Four stick-on plastic feet that raise the unit 4 in. (101.6 mm) above the mounting pad. This allows sand, dirt, and other debris to be flushed from the unit base, minimizing corrosion.

Usage Guideline:

Suggested in the following applications:

Coastal installations.

Windy areas or where debris is normally circulating.

Rooftop installations.

For improved sound ratings.

12. Thermostatic Expansion Valve (TXV)

A modulating flow-control valve which meters refrigerant liquid flow rate into the evaporator in response to the superheat of the refrigerant gas leaving the evaporator.

Kit includes valve, adapter tubes, and external equalizer tube. Hard shut off types are available.

NOTE: When using a hard shut off TXV with single phase reciprocating compressors, a Compressor Start Assist Capacitor and Relay is required.

Usage Guideline:

Required to achieve ARI ratings in certain equipment combinations. Refer to combination ratings.

Hard shut off TXV or LLS required in air conditioner long line applications.

Required for use on all zoning systems.

13. Time-Delay Relay

An SPST delay relay which briefly continues operation of indoor blower motor to provide additional cooling after the compressor cycles off.

NOTE: Most indoor unit controls include this feature. For those that do not, use the guideline below.

Usage Guideline:

For improved efficiency ratings for certain combinations of indoor and outdoor units. Refer to ARI Unitary Directory.

14. Winter Start Control

This control is designed to alleviate nuisance opening of the low-pressure switch by bypassing it for the first 3 minutes of operation.

ELECTRICAL DATA

UNIT SIZE– VOLTAGE, SERIES	V/PH	OPER VOLTS*		COMPR		FAN	MCA	MIN WIRE SIZE†	MIN WIRE SIZE†	MAX LENGTH ft. (m)‡	MAX LENGTH ft. (m)‡	MAX FUSE** or CKT BRK AMPS
		MAX	MIN	LRA	RLA	FLA		60° C	75° C	60° C	75° C	
18–31	208/230/1	253	197	48.0	9.0	0.5	11.8	14	14	66 (20.1)	63 (21.0)	15
24–31				58.3	13.5	0.75	17.6	14	14	44 (13.4)	42 (12.8)	25
30–31				64.0	12.8	1.4	16.8	14	14	46 (14.0)	44 (13.4)	25
36–31				77.0	14.1	1.4	20.5	12	12	61 (18.6)	58 (17.7)	30
42–30				112.0	17.9	1.1	23.5	12	12	53 (16.2)	51 (15.5)	40
48–31				109.0	19.9	1.4	26.2	10	10	76 (23.2)	72 (22.2)	40
60–31				134.0	26.4	1.2	34.2	8	10	62 (18.9)	55 (16.8)	50

* Permissible limits of the voltage range at which the unit will operate satisfactorily

† If wire is applied at ambient greater than 30°C , consult table 310–16 of the NEC (ANSI/NFPA 70). The ampacity of non–metallic–sheathed cable (NM), trade name ROMEX, shall be that of 60°C conditions, per the NEC (ANSI/NFPA 70) Article 336–26. If other than uncoated (no–plated), 60 or 75°C insulation, copper wire (solid wire for 10 AWG or smaller, stranded wire for larger than 10 AWG) is used, consult applicable tables of the NEC (ANSI/NFPA 70).

‡ Length shown is as measured one way along wire path between unit and service panel for voltage drop not to exceed 2%.

** Time–Delay fuse.

FLA – Full Load Amps
LRA – Locked Rotor Amps
MCA – Minimum Circuit Amps
RLA – Rated Load Amps
NOTE: Control circuit is 24–V on all units and requires external power source. Copper wire must be used from service disconnect to unit. All motors/compressors contain internal overload protection.

A-WEIGHTED SOUND POWER LEVEL

UNIT SIZE – VOLTAGE, SERIES	STANDARD RATING (dBA)	TYPICAL OCTAVE BAND SPECTRUM (dBA, without tone adjustment)						
		125	250	500	1000	2000	4000	8000
18–31	72	53.5	59.5	63.5	67.0	63.5	59.0	52.5
24–31	76	55.0	61.5	67.0	71.5	69.0	61.0	55.0
30–31	74	55.0	63.5	68.5	68.5	65.5	61.0	54.0
36–31	75	59.5	63.0	68.5	70.0	65.5	61.5	53.5
42–30	78	57.5	65.0	71.0	73.0	70.5	67.5	62.5
48–31	80	58.5	67.5	73.5	75.0	70.5	67.5	64.5
60–31	78	59.0	67.5	71.5	73.5	69.0	66.0	63.5

NOTE: Tested in accordance with ARI Standard 270–95 (not listed in ARI).

A-WEIGHTED SOUND POWER LEVEL WITH SOUND SHIELD

UNIT SIZE – VOLTAGE, SERIES	STANDARD RATING (dBA)	TYPICAL OCTAVE BAND SPECTRUM (dBA, without tone adjustment)						
		125	250	500	1000	2000	4000	8000
18–31	71	55.5	60.5	64.0	66.0	63.0	58.5	52.0
24–31	74	55.5	60.5	68.5	70.0	67.0	61.0	53.6
30–31	73	55.5	64.0	68.0	67.0	64.0	60.0	52.5
36–31	74	59.5	63.0	68.0	69.5	65.0	60.5	50.5
42–30	77	57.5	65.0	70.5	72.0	70.0	67.0	62.0
48–31	79	60.5	67.5	73.5	74.5	71.0	68.0	63.5
60–31	78	59.0	68.0	70.5	72.5	68.0	67.0	63.0

NOTE: Tested in accordance with ARI Standard 270–95 (not listed in ARI).

CHARGING SUBCOOLING (TXV-TYPE EXPANSION DEVICE)

UNIT SIZE– VOLTAGE & SERIES	REQUIRED SUBCOOLING °F (°C)
18–31	10 (5.6)
24–31	10 (5.6)
30–31	10 (5.6)
36–31	14 (7.8)
42–30	10 (5.6)
48–31	15 (8.3)
60–31	13 (7.2)

DIMENSIONS - ENGLISH (SIZES 18-36 & 48-60)

UNIT	SERIES	ELECTRICAL CHARACTERISTICS				A	B	C	D	E	F	G	K	L	M	N	P	OPERATING WEIGHT (lbs)	SHIPPING WEIGHT (lbs)	SHIPPING DIMENSIONS (L x W x H)
24ABB318	1	X	O	O	O	23 1/2"	25 5/16"	3 3/4"	3/4"	4 7/16"	18 1/16"	7 13/16"	2 13/16"	1/2"	16 1/2"	15"	12"	107	130	24 1/4" X 27 3/8" X 33 1/2"
24ABB324	1	X	O	O	O	23 1/2"	25 5/16"	3 3/4"	3/4"	4 7/16"	18 1/16"	7 13/16"	2 13/16"	1/2"	16 1/2"	15"	12"	110	134	24 1/4" X 27 3/8" X 33 1/2"
24ABB330	1	X	O	O	O	23 1/2"	28 11/16"	3 3/4"	3/4"	4 7/16"	18 1/16"	7 13/16"	2 13/16"	1/2"	16 1/2"	15"	14"	111	136	24 1/4" X 27 3/8" X 33 1/2"
24ABB336	1	X	O	O	O	25 3/4"	32 5/16"	3 7/8"	7/8"	4 7/16"	21 1/4"	9 1/8"	2 15/16"	5/8"	14 1/4"	10 1/2"	16"	141	170	26 7/8" X 30 1/16" X 35 15/16"
24ABB348	1	X	O	O	O	31 3/16"	35 3/4"	3 7/8"	7/8"	6 9/16"	24 11/16"	9 1/8"	2 15/16"	5/8"	16 3/8"	15 3/8"	15 1/4"	186	224	32 3/8" X 35 1/2" X 39 3/8"
24ABB360	1	X	O	O	O	31 3/16"	25 1/2"	3 7/8"	7/8"	6 9/16"	24 11/16"	9 1/8"	2 15/16"	5/8"	14 1/8"	15 3/8"	11 3/8"	190	226	32 3/8" X 35 1/2" X 32 9/16"
		208-230-1-60	230-1-60	208/230-3-60	460-3-60															

X = YES
O = NO

NOTES:

1. **Allow 24" between units or 18" if no overhang within 12 ft.**
2. MINIMUM OUTDOOR OPERATING AMBIENT IN COOLING MODE IS 55°F, MAX. 125°F.
3. SERIES DESIGNATION IS THE 13TH POSITION OF THE UNIT MODEL NUMBER.
4. CENTER OF GRAVITY ⊕.
5. ALL DIMENSIONS ARE IN "INCHES" UNLESS NOTED.

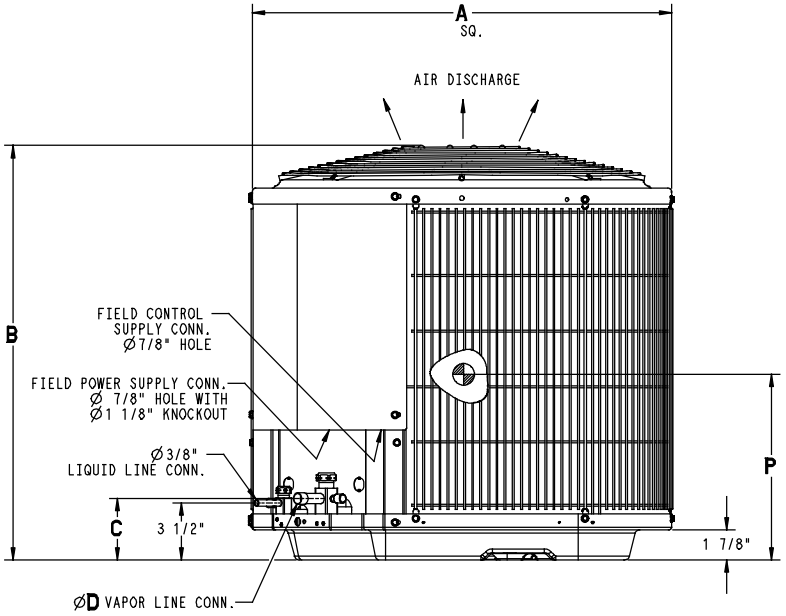

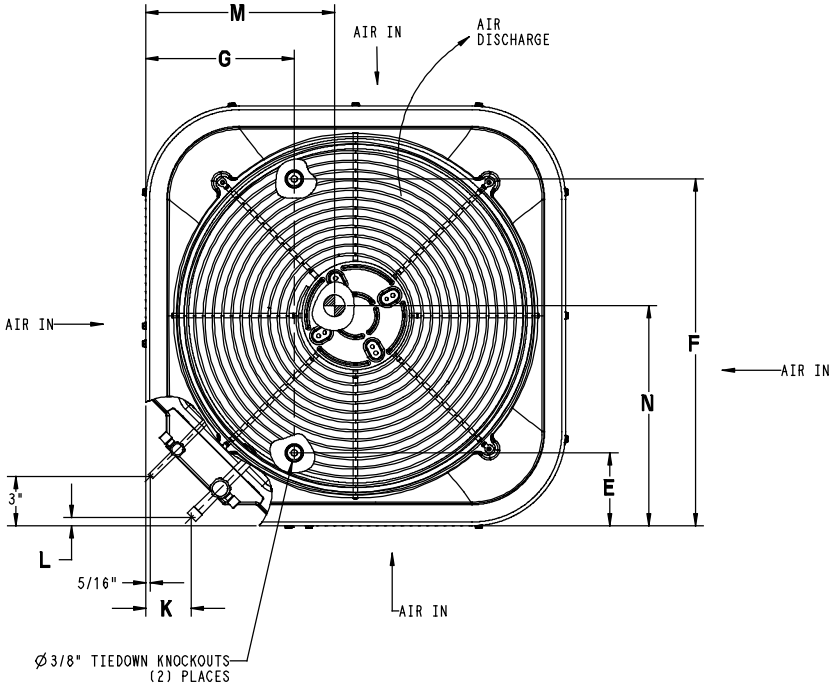

UNIT SIZE	MINIMUM MOUNTING PAD DIMENSIONS
18,24,30	23 1/2" X 23 1/2"
36	26" X 26"
48,60	31 1/2" X 31 1/2"
-	35" X 35"

DIMENSIONS - ENGLISH (SIZE 42)

UNIT	SERIES	ELECTRICAL CHARACTERISTICS				A	B	C	D	E	F	G	K	L	M	N	P	OPERATING WEIGHT (lbs)	SHIPPING WEIGHT (lbs)	SHIPPING DIMENSIONS (L x W x H)
24ABB342	0	X	0	0	0	31 3/16"	32 5/16"	3 7/8"	7/8"	6 9/16"	24 11/16"	9 1/8"	2 15/16"	5/8"	15 3/4"	16 1/4"	13 3/4"	190	218	32 3/8" X 35 1/2" X 35 15/16"

208-230-1-60	230-1-60	208/230-3-60	460-3-60

X = YES
0 = NO

NOTES:
1. **Allow 24" between units or 18" if no overhang within 12 ft.**
2. MINIMUM OUTDOOR OPERATING AMBIENT IN COOLING MODE IS 55°F, MAX. 125°F.
3. SERIES DESIGNATION IS THE 13TH POSITION OF THE UNIT MODEL NUMBER.
4. CENTER OF GRAVITY ⊕.
5. ALL DIMENSIONS ARE IN "INCHES" UNLESS NOTED.

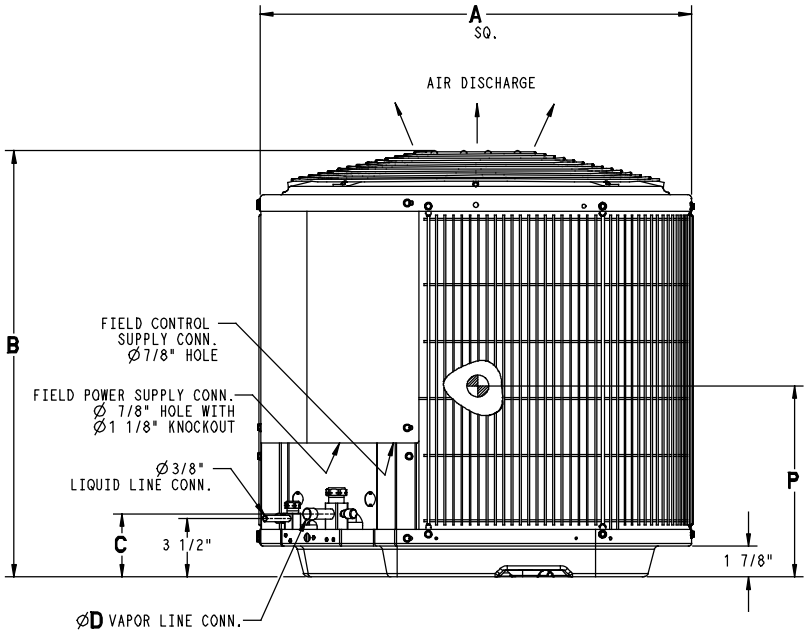

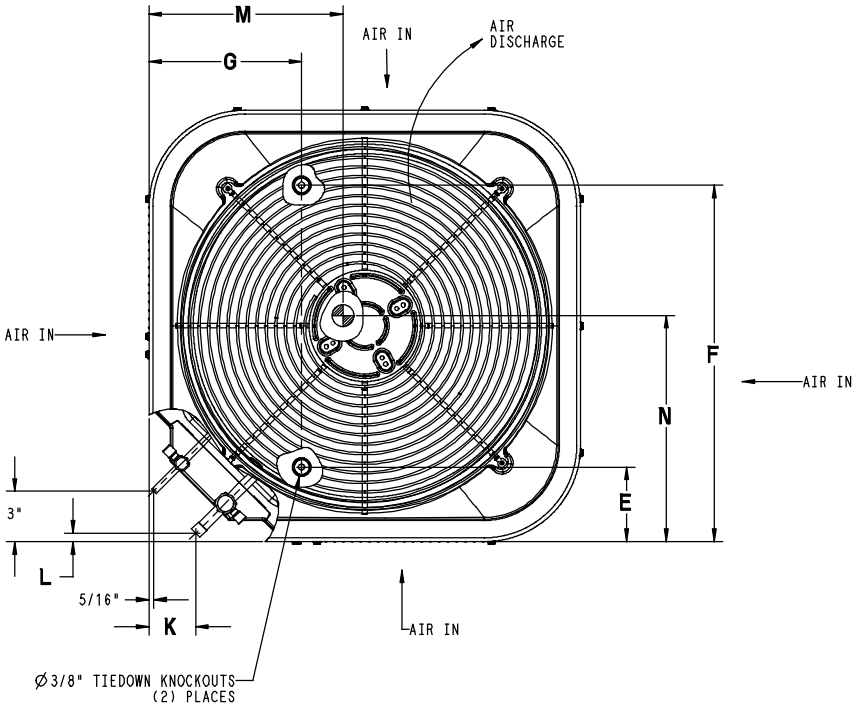

UNIT SIZE	MINIMUM MOUNTING PAD DIMENSIONS
42	31 1/2" X 31 1/2"

DIMENSIONS - SI (SIZES 18-36 & 48-60)

UNIT	SERIES	ELECTRICAL CHARACTERISTICS				A	B	C	D	E	F	G	K	L	M	N	P	OPERATING WEIGHT (Kgs)	SHIPPING WEIGHT (Kgs)	SHIPPING DIMENSIONS (L x W x H)
24ABB318	1	X	O	O	O	596.9	643.0	95.2	19.0	112.7	458.8	198.4	71.4	12.7	419.1	381.0	304.8	48.5	59.0	616.0 X 695.3 X 850.9
24ABB324	1	X	O	O	O	596.9	643.0	95.2	19.0	112.7	458.8	198.4	71.4	12.7	419.1	381.0	304.8	49.9	60.8	616.0 X 695.3 X 850.9
24ABB330	1	X	O	O	O	596.9	728.7	95.2	19.0	112.7	458.8	198.4	71.4	12.7	419.1	381.0	355.6	50.3	61.7	616.0 X 695.3 X 850.9
24ABB336	1	X	O	O	O	654.0	820.8	98.4	22.2	112.7	539.8	231.8	74.6	15.9	362.0	266.7	406.4	64.0	77.1	682.6 X 763.6 X 912.8
24ABB348	1	X	O	O	O	792.2	908.0	98.4	22.2	166.7	627.1	231.8	74.6	15.9	415.9	390.5	387.4	84.4	101.6	822.3 X 901.7 X 1000.1
24ABB360	1	X	O	O	O	792.2	647.7	98.4	22.2	166.7	627.1	231.8	74.6	15.9	358.8	390.5	288.9	86.2	102.5	822.3 X 901.7 X 827.1
		208-230-1-60	230-1-60	208/230-3-60	460-3-60															

X = YES
O = NO

NOTES:

1. **Allow 24" between units or 18" if no overhang within 12 ft.**
2. MINIMUM OUTDOOR OPERATING AMBIENT IN COOLING MODE IS 55°F, MAX. 125°F.
3. SERIES DESIGNATION IS THE 13TH POSITION OF THE UNIT MODEL NUMBER.
4. CENTER OF GRAVITY ⊕.
5. ALL DIMENSIONS ARE IN "INCHES" UNLESS NOTED.

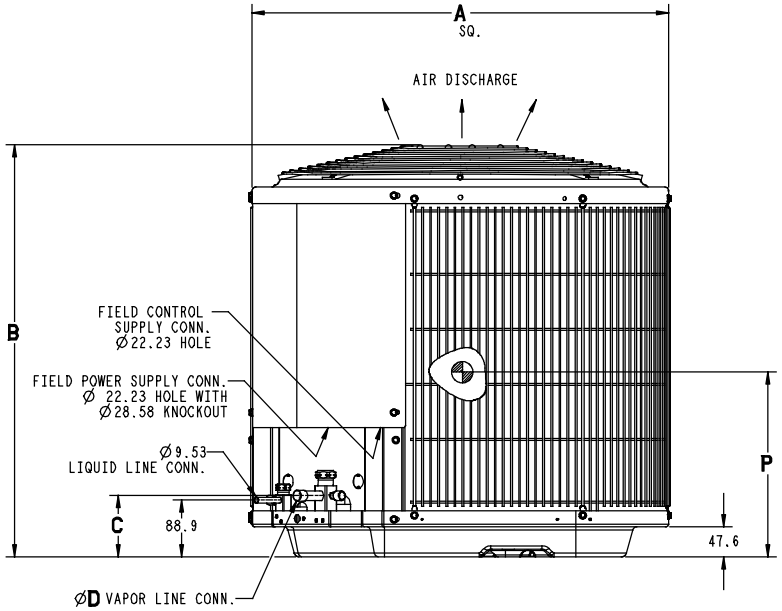

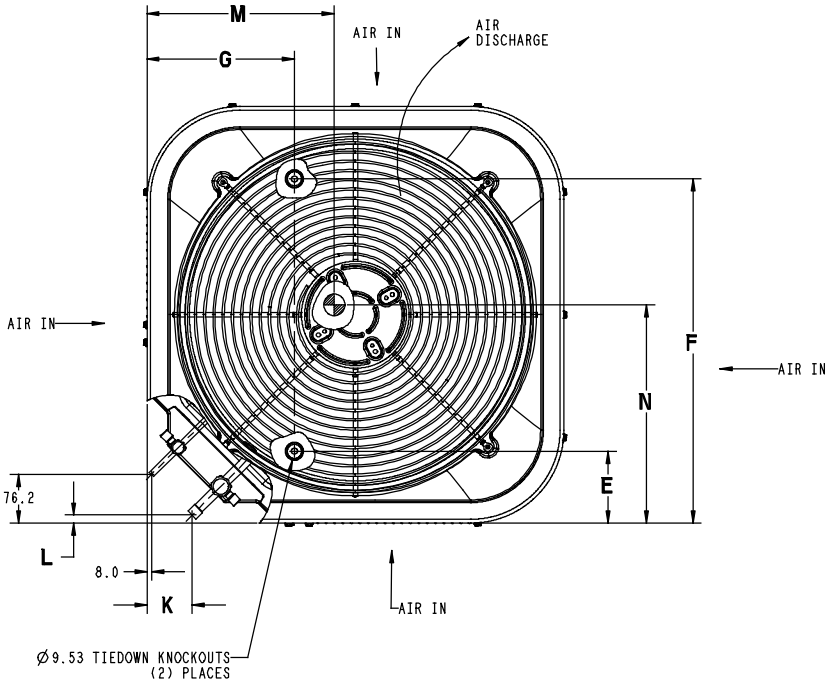

UNIT SIZE	MINIMUM MOUNTING PAD DIMENSIONS
18,24,30	596.9 X 596.9
36	660.4 X 660.4
48,60	800.1 X 800.1
-	889.0 X 889.0

DIMENSIONS - SI (SIZE 42)

UNIT	SERIES	ELECTRICAL CHARACTERISTICS				A	B	C	D	E	F	G	K	L	M	N	P	OPERATING WEIGHT (Kgs)	SHIPPING WEIGHT (Kgs)	SHIPPING DIMENSIONS (L x W x H)
24ABB342	0	X	0	0	0	792.2	820.8	98.4	22.2	166.7	627.1	231.8	74.6	15.9	400.0	412.8	349.2	86.2	98.9	822.3 X 901.7 X 912.8
		208-230-1-60	230-1-60	208/230-3-60	460-3-60															

X = YES
0 = NO

NOTES:

1. **Allow 24" between units or 18" if no overhang within 12 ft.**
2. MINIMUM OUTDOOR OPERATING AMBIENT IN COOLING MODE IS 55°F, MAX. 125°F.
3. SERIES DESIGNATION IS THE 13TH POSITION OF THE UNIT MODEL NUMBER.
4. CENTER OF GRAVITY ⊕.
5. ALL DIMENSIONS ARE IN "INCHES" UNLESS NOTED.

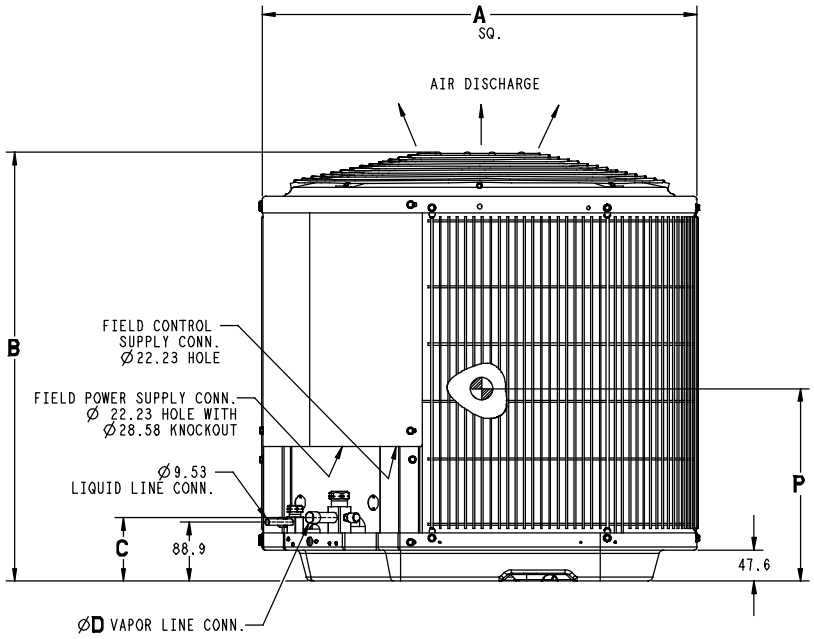

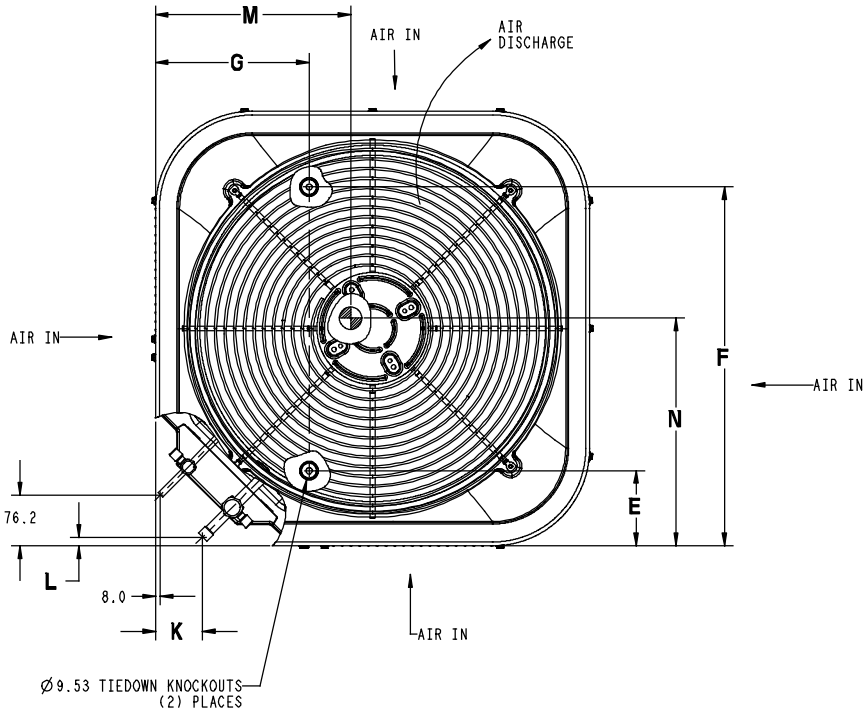

UNIT SIZE	MINIMUM MOUNTING PAD DIMFNSIONS
42	800.1 X 800.1

CLEARANCES

Clearances (various examples)

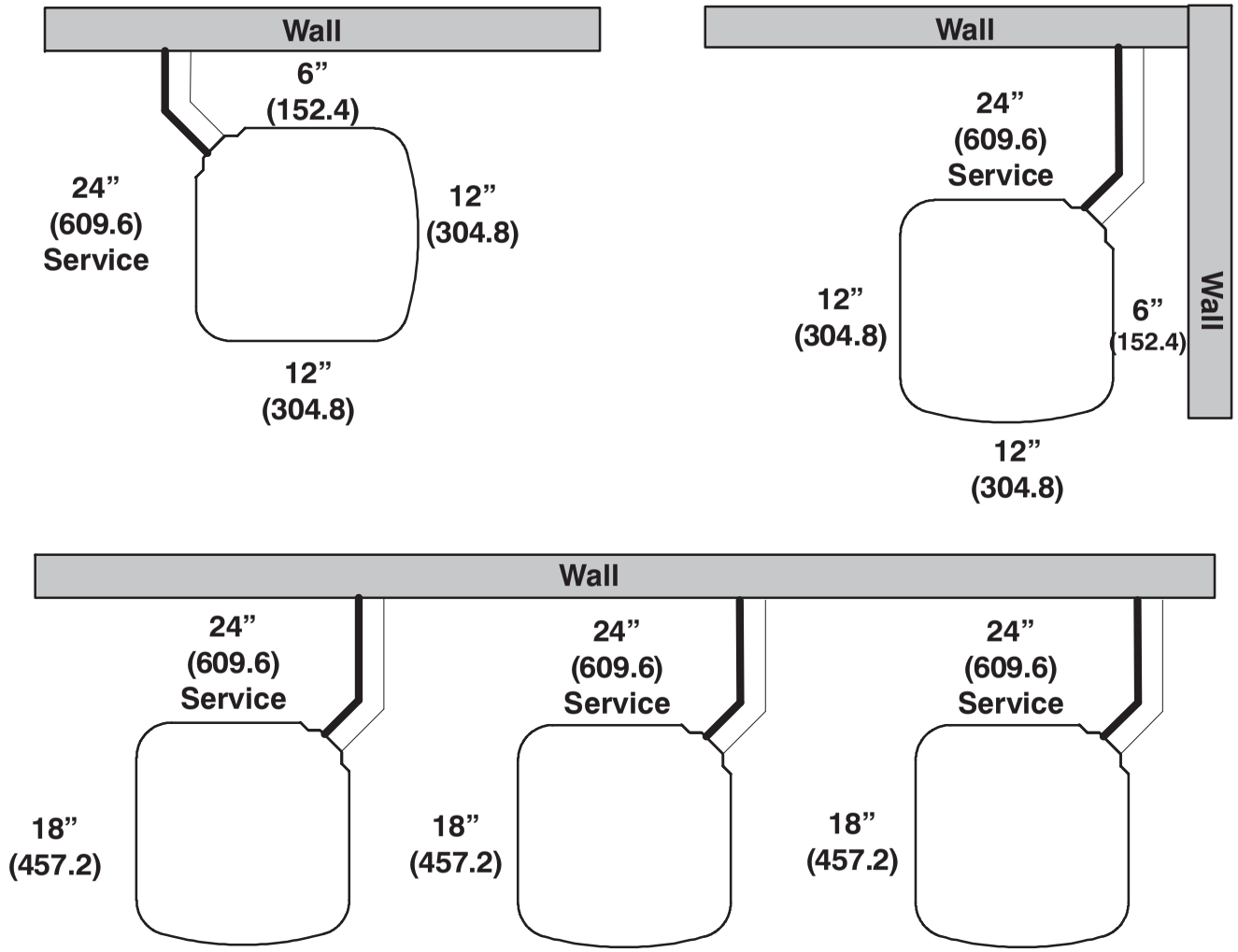

Note: Numbers in ( ) = mm

COMBINATION RATINGS

ARI Ref. No.	Model Number	Indoor Model	Furnace Model	Capacity	EER	SEER
3162804	24ABB318A31	†CAP**1814A**+TDR		17600	10.90	13.00
3162805	24ABB318A31	CAP**1814A**	58CV(A,X)070−12	17500	12.00	14.50
3162806	24ABB318A31	CAP**1814A**	58PH*045−08	17800	12.00	14.50
3162808	24ABB318A31	CAP**2414A**	58CV(A,X)070−12	17800	12.20	14.50
3162809	24ABB318A31	CAP**2414A**	58PH*045−08	18000	12.20	14.50
3162807	24ABB318A31	CAP**2414A**+TDR		17900	11.00	13.20
3162812	24ABB318A31	CAP**2417A**	58CV(A,X)090−16	17800	12.20	14.50
3162813	24ABB318A31	CAP**2417A**	58MEB040−12	18000	12.50	15.00
3162814	24ABB318A31	CAP**2417A**	58MEB060−12	18000	12.50	15.00
3162811	24ABB318A31	CAP**2417A**	58MV(B,C)060−14	17800	12.20	14.50
3162810	24ABB318A31	CAP**2417A**+TDR		17900	11.00	13.20
3162835	24ABB318A31	CNPF*2418A**+TDR		17900	11.00	13.20
3162830	24ABB318A31	CNPH*2417A**	58CV(A,X)070−12	17800	12.20	14.50
3162831	24ABB318A31	CNPH*2417A**	58CV(A,X)090−16	17800	12.20	14.50
3162833	24ABB318A31	CNPH*2417A**	58MEB040−12	18000	12.20	15.00
3162834	24ABB318A31	CNPH*2417A**	58MEB060−12	18000	12.20	15.00
3162828	24ABB318A31	CNPH*2417A**	58MV(B,C)060−14	17800	12.20	14.50
3162829	24ABB318A31	CNPH*2417A**	58MV(B,C)080−14	17700	12.20	14.50
3162827	24ABB318A31	CNPH*2417A**	58MVB040−14	17800	12.20	14.50
3162832	24ABB318A31	CNPH*2417A**	58PH*045−08	17800	12.20	14.50
3162826	24ABB318A31	CNPH*2417A**+TDR		17900	11.00	13.20
3162816	24ABB318A31	CNPV*1814A**	58CV(A,X)070−12	17500	12.00	14.50
3162817	24ABB318A31	CNPV*1814A**	58PH*045−08	17800	12.00	14.50
3162815	24ABB318A31	CNPV*1814A**+TDR		17600	10.90	13.00
3162819	24ABB318A31	CNPV*2414A**	58CV(A,X)070−12	17800	12.20	14.50
3162820	24ABB318A31	CNPV*2414A**	58PH*045−08	18000	12.20	14.50
3162818	24ABB318A31	CNPV*2414A**+TDR		17900	11.00	13.20
3162823	24ABB318A31	CNPV*2417A**	58CV(A,X)090−16	17800	12.20	14.50
3162824	24ABB318A31	CNPV*2417A**	58MEB040−12	18000	12.20	15.00
3162825	24ABB318A31	CNPV*2417A**	58MEB060−12	18000	12.20	15.00
3162822	24ABB318A31	CNPV*2417A**	58MV(B,C)060−14	17800	12.20	14.50
3162821	24ABB318A31	CNPV*2417A**+TDR		17900	11.00	13.20
3162840	24ABB318A31	CSPH*2412A**	58CV(A,X)070−12	17900	12.20	14.50
3162841	24ABB318A31	CSPH*2412A**	58CV(A,X)090−16	17900	12.20	14.50
3162843	24ABB318A31	CSPH*2412A**	58MEB040−12	18000	12.20	15.00
3162844	24ABB318A31	CSPH*2412A**	58MEB060−12	18000	12.20	15.00
3162838	24ABB318A31	CSPH*2412A**	58MV(B,C)060−14	17900	12.20	14.50
3162839	24ABB318A31	CSPH*2412A**	58MV(B,C)080−14	17900	12.20	14.50
3162837	24ABB318A31	CSPH*2412A**	58MVB040−14	17800	12.20	14.50
3162842	24ABB318A31	CSPH*2412A**	58PH*045−08	18000	12.20	14.50
3162836	24ABB318A31	CSPH*2412A**+TDR		17900	11.00	13.20
3162849	24ABB318A31	FE4ANF002+UI		17300	12.20	14.50
3162850	24ABB318A31	FF1ENP018		17500	10.90	13.00
3162851	24ABB318A31	FF1ENP024		17500	11.00	13.20
3162852	24ABB318A31	FV4BNF002		17300	12.20	14.50
3162847	24ABB318A31	FX4CNF018		18000	12.00	14.50
3162848	24ABB318A31	FX4CNF024		18000	12.20	14.50
3162845	24ABB318A31	FY4ANF018		17700	10.90	13.00
3162846	24ABB318A31	FY4ANF024		18000	10.90	13.00
3162853	24ABB324A31	†CAP**2414A**+TDR		23000	11.00	13.00
3162854	24ABB324A31	CAP**2414A**	58CV(A,X)070−12	22800	12.00	14.00
3162855	24ABB324A31	CAP**2414A**	58PH*045−08	23000	11.70	14.00
3162858	24ABB324A31	CAP**2417A**	58CV(A,X)090−16	23000	12.20	14.50
3162859	24ABB324A31	CAP**2417A**	58MEB040−12	23400	12.20	14.50
3162860	24ABB324A31	CAP**2417A**	58MEB060−12	23400	12.20	14.50
3162861	24ABB324A31	CAP**2417A**	58MEB080−12	23200	12.20	14.50
3162857	24ABB324A31	CAP**2417A**	58MV(B,C)060−14	23200	12.20	14.50
3162856	24ABB324A31	CAP**2417A**+TDR		23000	11.00	13.00
3162863	24ABB324A31	CAP**3014A**	58CV(A,X)070−12	23000	12.00	14.50
3162864	24ABB324A31	CAP**3014A**	58PH*045−08	23400	12.00	14.00
3162862	24ABB324A31	CAP**3014A**+TDR		23200	11.00	13.00
3162867	24ABB324A31	CAP**3017A**	58CV(A,X)090−16	23200	12.20	14.50
3162868	24ABB324A31	CAP**3017A**	58MEB040−12	23600	12.20	14.50
3162869	24ABB324A31	CAP**3017A**	58MEB060−12	23800	12.20	14.50
3162870	24ABB324A31	CAP**3017A**	58MEB080−12	23600	12.20	14.50
3162866	24ABB324A31	CAP**3017A**	58MV(B,C)060−14	23400	12.20	14.50
3162865	24ABB324A31	CAP**3017A**+TDR		23200	11.00	13.00
3162921	24ABB324A31	CNPF*2418A**+TDR		23000	11.00	13.00
3162896	24ABB324A31	CNPH*2417A**	58CV(A,X)070−12	22800	11.70	14.00
3162897	24ABB324A31	CNPH*2417A**	58CV(A,X)090−16	22800	12.00	14.00
3162898	24ABB324A31	CNPH*2417A**	58CV(A,X)110−20	22800	11.70	14.00
3162899	24ABB324A31	CNPH*2417A**	58CV(A,X)135−22	22800	12.00	14.00
3162900	24ABB324A31	CNPH*2417A**	58CV(A,X)155−22	22800	12.00	14.00
3162902	24ABB324A31	CNPH*2417A**	58MEB040−12	23200	12.00	14.50
3162903	24ABB324A31	CNPH*2417A**	58MEB060−12	23200	12.00	14.50
3162904	24ABB324A31	CNPH*2417A**	58MEB080−12	23200	12.00	14.50
3162891	24ABB324A31	CNPH*2417A**	58MV(B,C)060−14	23200	12.00	14.00
3162892	24ABB324A31	CNPH*2417A**	58MV(B,C)080−14	22800	12.00	14.00

See notes on page 19

COMBINATION RATINGS CONTINUED

ARI Ref. No.	Model Number	Indoor Model	Furnace Model	Capacity	EER	SEER
3162893	24ABB324A31	CNPH*2417A**	58MV(B,C)080−20	22600	12.00	14.00
3162894	24ABB324A31	CNPH*2417A**	58MV(B,C)100−20	22800	12.00	14.00
3162895	24ABB324A31	CNPH*2417A**	58MV(B,C)120−20	23000	12.00	14.00
3162890	24ABB324A31	CNPH*2417A**	58MVB040−14	22800	11.70	14.00
3162901	24ABB324A31	CNPH*2417A**	58PH*045−08	23000	11.70	14.00
3162889	24ABB324A31	CNPH*2417A**+TDR		23000	11.00	13.00
3162912	24ABB324A31	CNPH*3017A**	58CV(A,X)070−12	23000	12.00	14.50
3162913	24ABB324A31	CNPH*3017A**	58CV(A,X)090−16	23200	12.20	14.50
3162914	24ABB324A31	CNPH*3017A**	58CV(A,X)110−20	23200	12.20	14.50
3162915	24ABB324A31	CNPH*3017A**	58CV(A,X)135−22	23200	12.20	14.50
3162916	24ABB324A31	CNPH*3017A**	58CV(A,X)155−22	23200	12.20	14.50
3162918	24ABB324A31	CNPH*3017A**	58MEB040−12	23600	12.20	14.50
3162919	24ABB324A31	CNPH*3017A**	58MEB060−12	23800	12.20	14.50
3162920	24ABB324A31	CNPH*3017A**	58MEB080−12	23600	12.20	14.50
3162907	24ABB324A31	CNPH*3017A**	58MV(B,C)060−14	23400	12.20	14.50
3162908	24ABB324A31	CNPH*3017A**	58MV(B,C)080−14	23200	12.20	14.50
3162909	24ABB324A31	CNPH*3017A**	58MV(B,C)080−20	23000	12.20	14.50
3162910	24ABB324A31	CNPH*3017A**	58MV(B,C)100−20	23200	12.20	14.50
3162911	24ABB324A31	CNPH*3017A**	58MV(B,C)120−20	23200	12.20	14.50
3162906	24ABB324A31	CNPH*3017A**	58MVB040−14	23200	12.20	14.50
3162917	24ABB324A31	CNPH*3017A**	58PH*045−08	23400	12.00	14.00
3162905	24ABB324A31	CNPH*3017A**+TDR		23200	11.00	13.00
3162872	24ABB324A31	CNPV*2414A**	58CV(A,X)070−12	22800	11.70	14.00
3162873	24ABB324A31	CNPV*2414A**	58PH*045−08	23000	11.70	14.00
3162871	24ABB324A31	CNPV*2414A**+TDR		23000	11.00	13.00
3162876	24ABB324A31	CNPV*2417A**	58CV(A,X)090−16	22800	12.00	14.00
3162877	24ABB324A31	CNPV*2417A**	58MEB040−12	23200	12.00	14.50
3162878	24ABB324A31	CNPV*2417A**	58MEB060−12	23200	12.00	14.50
3162879	24ABB324A31	CNPV*2417A**	58MEB080−12	23200	12.00	14.50
3162875	24ABB324A31	CNPV*2417A**	58MV(B,C)060−14	23200	12.00	14.00
3162874	24ABB324A31	CNPV*2417A**+TDR		23000	11.00	13.00
3162881	24ABB324A31	CNPV*3014A**	58CV(A,X)070−12	23000	12.00	14.50
3162882	24ABB324A31	CNPV*3014A**	58PH*045−08	23200	12.00	14.00
3162880	24ABB324A31	CNPV*3014A**+TDR		23200	11.00	13.00
3162885	24ABB324A31	CNPV*3017A**	58CV(A,X)090−16	23200	12.20	14.50
3162886	24ABB324A31	CNPV*3017A**	58MEB040−12	23600	12.20	14.50
3162887	24ABB324A31	CNPV*3017A**	58MEB060−12	23800	12.20	14.50
3162888	24ABB324A31	CNPV*3017A**	58MEB080−12	23600	12.20	14.50
3162884	24ABB324A31	CNPV*3017A**	58MV(B,C)060−14	23400	12.20	14.50
3162883	24ABB324A31	CNPV*3017A**+TDR		23200	11.00	13.00
3162929	24ABB324A31	CSPH*2412A**	58CV(A,X)070−12	23000	12.00	14.00
3162930	24ABB324A31	CSPH*2412A**	58CV(A,X)090−16	23200	12.00	14.00
3162931	24ABB324A31	CSPH*2412A**	58CV(A,X)110−20	23200	12.00	14.00
3162932	24ABB324A31	CSPH*2412A**	58CV(A,X)135−22	23200	12.00	14.00
3162933	24ABB324A31	CSPH*2412A**	58CV(A,X)155−22	23200	12.00	14.00
3162935	24ABB324A31	CSPH*2412A**	58MEB040−12	23400	12.20	14.50
3162936	24ABB324A31	CSPH*2412A**	58MEB060−12	23400	12.20	14.50
3162937	24ABB324A31	CSPH*2412A**	58MEB080−12	23400	12.20	14.50
3162924	24ABB324A31	CSPH*2412A**	58MV(B,C)060−14	23400	12.00	14.00
3162925	24ABB324A31	CSPH*2412A**	58MV(B,C)080−14	23000	12.00	14.00
3162926	24ABB324A31	CSPH*2412A**	58MV(B,C)080−20	23000	12.00	14.00
3162927	24ABB324A31	CSPH*2412A**	58MV(B,C)100−20	23200	12.00	14.00
3162928	24ABB324A31	CSPH*2412A**	58MV(B,C)120−20	23200	12.00	14.00
3162923	24ABB324A31	CSPH*2412A**	58MVB040−14	23200	12.00	14.00
3162934	24ABB324A31	CSPH*2412A**	58PH*045−08	23200	12.00	14.00
3162922	24ABB324A31	CSPH*2412A**+TDR		23000	11.00	13.00
3162945	24ABB324A31	CSPH*3012A**	58CV(A,X)070−12	23000	12.00	14.50
3162946	24ABB324A31	CSPH*3012A**	58CV(A,X)090−16	23200	12.20	14.50
3162947	24ABB324A31	CSPH*3012A**	58CV(A,X)110−20	23200	12.20	14.50
3162948	24ABB324A31	CSPH*3012A**	58CV(A,X)135−22	23200	12.20	14.50
3162949	24ABB324A31	CSPH*3012A**	58CV(A,X)155−22	23200	12.20	14.50
3162951	24ABB324A31	CSPH*3012A**	58MEB040−12	23600	12.20	14.50
3162952	24ABB324A31	CSPH*3012A**	58MEB060−12	23800	12.20	14.50
3162953	24ABB324A31	CSPH*3012A**	58MEB080−12	23600	12.20	14.50
3162940	24ABB324A31	CSPH*3012A**	58MV(B,C)060−14	23600	12.20	14.50
3162941	24ABB324A31	CSPH*3012A**	58MV(B,C)080−14	23200	12.20	14.50
3162942	24ABB324A31	CSPH*3012A**	58MV(B,C)080−20	23000	12.20	14.50
3162943	24ABB324A31	CSPH*3012A**	58MV(B,C)100−20	23200	12.20	14.50
3162944	24ABB324A31	CSPH*3012A**	58MV(B,C)120−20	23400	12.20	14.50
3162939	24ABB324A31	CSPH*3012A**	58MVB040−14	23200	12.20	14.50
3162950	24ABB324A31	CSPH*3012A**	58PH*045−08	23400	12.00	14.00
3162938	24ABB324A31	CSPH*3012A**+TDR		23200	11.00	13.00
3162959	24ABB324A31	FE4AN(B,F)003+UI		23400	12.20	14.50
3162958	24ABB324A31	FE4ANF002+UI		22600	12.00	14.00
3162960	24ABB324A31	FF1ENP024		22600	11.00	13.00
3162961	24ABB324A31	FF1ENP030		23000	10.90	13.00
3162963	24ABB324A31	FV4BN(B,F)003		23400	12.20	14.50
3162962	24ABB324A31	FV4BNF002		22600	12.00	14.00
3162956	24ABB324A31	FX4CNF024		23200	11.70	14.00

See notes on page 19

COMBINATION RATINGS CONTINUED

ARI Ref. No.	Model Number	Indoor Model	Furnace Model	Capacity	EER	SEER
3162957	24ABB324A31	FX4CNF030		23400	12.00	14.50
3162954	24ABB324A31	FY4ANF024		23000	11.00	13.00
3162955	24ABB324A31	FY4ANF030		23200	11.00	13.00
3162964	24ABB330A31	†CAP**3014A**+TDR		27400	10.80	13.00
3162975	24ABB330A31	CAP**3014A**	58CV(A,X)070−12	27200	11.70	14.00
3162978	24ABB330A31	CAP**3017A**	58CV(A,X)090−16	27400	12.00	14.00
3162980	24ABB330A31	CAP**3017A**	58MEB040−12	27600	12.00	14.50
3162981	24ABB330A31	CAP**3017A**	58MEB060−12	27800	11.70	14.00
3162982	24ABB330A31	CAP**3017A**	58MEB080−12	27600	12.00	14.00
3162983	24ABB330A31	CAP**3017A**	58MEB080−16	27800	11.70	14.00
3162977	24ABB330A31	CAP**3017A**	58MV(B,C)060−14	27400	11.70	14.00
3162979	24ABB330A31	CAP**3017A**	58PH*070−16	27400	11.70	14.00
3162976	24ABB330A31	CAP**3017A**+TDR		27400	10.80	13.00
3162985	24ABB330A31	CAP**3614A**	58CV(A,X)070−12	27400	11.70	14.00
3162984	24ABB330A31	CAP**3614A**+TDR		27400	10.80	13.00
3162988	24ABB330A31	CAP**3617A**	58CV(A,X)090−16	27400	12.00	14.50
3162990	24ABB330A31	CAP**3617A**	58MEB040−12	27800	12.00	14.50
3162991	24ABB330A31	CAP**3617A**	58MEB060−12	27600	12.00	14.50
3162992	24ABB330A31	CAP**3617A**	58MEB080−12	27600	12.00	14.50
3162993	24ABB330A31	CAP**3617A**	58MEB080−16	28000	11.70	14.00
3162987	24ABB330A31	CAP**3617A**	58MV(B,C)060−14	27600	12.00	14.00
3162989	24ABB330A31	CAP**3617A**	58PH*070−16	27600	11.70	14.00
3162986	24ABB330A31	CAP**3617A**+TDR		27600	10.80	13.00
3162998	24ABB330A31	CAP**3621A**	58CV(A,X)110−20	27600	12.00	14.50
3162995	24ABB330A31	CAP**3621A**	58MV(B,C)080−14	27400	11.70	14.00
3162996	24ABB330A31	CAP**3621A**	58MV(B,C)080−20	27400	12.00	14.00
3162997	24ABB330A31	CAP**3621A**	58MV(B,C)100−20	27200	11.70	14.00
3162999	24ABB330A31	CAP**3621A**	58PH*090−16	27800	12.00	14.00
3162994	24ABB330A31	CAP**3621A**+TDR		27600	10.80	13.00
3163060	24ABB330A31	CNPF*3618A**+TDR		27400	10.80	13.00
3163031	24ABB330A31	CNPH*3017A**	58CV(A,X)070−12	27200	11.70	14.00
3163032	24ABB330A31	CNPH*3017A**	58CV(A,X)090−16	27400	11.70	14.00
3163033	24ABB330A31	CNPH*3017A**	58CV(A,X)110−20	27400	11.70	14.00
3163034	24ABB330A31	CNPH*3017A**	58CV(A,X)135−22	27400	12.00	14.00
3163035	24ABB330A31	CNPH*3017A**	58CV(A,X)155−22	27400	12.00	14.00
3163038	24ABB330A31	CNPH*3017A**	58MEB040−12	27600	12.00	14.00
3163039	24ABB330A31	CNPH*3017A**	58MEB060−12	27800	11.70	14.00
3163040	24ABB330A31	CNPH*3017A**	58MEB080−12	27600	12.00	14.00
3163041	24ABB330A31	CNPH*3017A**	58MEB080−16	27800	11.70	14.00
3163026	24ABB330A31	CNPH*3017A**	58MV(B,C)060−14	27600	11.70	14.00
3163027	24ABB330A31	CNPH*3017A**	58MV(B,C)080−14	27200	11.70	14.00
3163028	24ABB330A31	CNPH*3017A**	58MV(B,C)080−20	27400	11.70	14.00
3163029	24ABB330A31	CNPH*3017A**	58MV(B,C)100−20	27200	11.70	14.00
3163030	24ABB330A31	CNPH*3017A**	58MV(B,C)120−20	27400	12.00	14.00
3163025	24ABB330A31	CNPH*3017A**	58MVB040−14	27400	11.70	14.00
3163036	24ABB330A31	CNPH*3017A**	58PH*070−16	27400	11.50	14.00
3163037	24ABB330A31	CNPH*3017A**	58PH*090−16	27600	11.70	14.00
3163024	24ABB330A31	CNPH*3017A**+TDR		27400	10.80	13.00
3163049	24ABB330A31	CNPH*3617A**	58CV(A,X)070−12	27400	11.70	14.00
3163050	24ABB330A31	CNPH*3617A**	58CV(A,X)090−16	27400	11.70	14.00
3163051	24ABB330A31	CNPH*3617A**	58CV(A,X)110−20	27400	11.70	14.00
3163052	24ABB330A31	CNPH*3617A**	58CV(A,X)135−22	27400	12.00	14.00
3163053	24ABB330A31	CNPH*3617A**	58CV(A,X)155−22	27400	12.00	14.00
3163056	24ABB330A31	CNPH*3617A**	58MEB040−12	27200	12.00	14.50
3163057	24ABB330A31	CNPH*3617A**	58MEB060−12	27200	12.00	14.50
3163058	24ABB330A31	CNPH*3617A**	58MEB080−12	27000	12.00	14.50
3163059	24ABB330A31	CNPH*3617A**	58MEB080−16	27800	11.70	14.00
3163044	24ABB330A31	CNPH*3617A**	58MV(B,C)060−14	27600	11.70	14.00
3163045	24ABB330A31	CNPH*3617A**	58MV(B,C)080−14	27200	11.70	14.00
3163046	24ABB330A31	CNPH*3617A**	58MV(B,C)080−20	27400	11.70	14.00
3163047	24ABB330A31	CNPH*3617A**	58MV(B,C)100−20	27200	11.70	14.00
3163048	24ABB330A31	CNPH*3617A**	58MV(B,C)120−20	27400	12.00	14.00
3163043	24ABB330A31	CNPH*3617A**	58MVB040−14	27400	11.70	14.00
3163054	24ABB330A31	CNPH*3617A**	58PH*070−16	27400	11.50	14.00
3163055	24ABB330A31	CNPH*3617A**	58PH*090−16	27600	11.70	14.00
3163042	24ABB330A31	CNPH*3617A**+TDR		27400	10.80	13.00
3163001	24ABB330A31	CNPV*3014A**	58CV(A,X)070−12	27200	11.70	14.00
3163000	24ABB330A31	CNPV*3014A**+TDR		27400	10.80	13.00
3163004	24ABB330A31	CNPV*3017A**	58CV(A,X)090−16	27400	11.70	14.00
3163006	24ABB330A31	CNPV*3017A**	58MEB040−12	27600	12.00	14.00
3163007	24ABB330A31	CNPV*3017A**	58MEB060−12	27800	11.70	14.00
3163008	24ABB330A31	CNPV*3017A**	58MEB080−12	27600	12.00	14.00
3163009	24ABB330A31	CNPV*3017A**	58MEB080−16	27800	11.70	14.00
3163003	24ABB330A31	CNPV*3017A**	58MV(B,C)060−14	27600	11.70	14.00
3163005	24ABB330A31	CNPV*3017A**	58PH*070−16	27400	11.50	14.00
3163002	24ABB330A31	CNPV*3017A**+TDR		27400	10.80	13.00
3163012	24ABB330A31	CNPV*3617A**	58CV(A,X)090−16	27400	11.70	14.00
3163014	24ABB330A31	CNPV*3617A**	58MEB040−12	27200	12.00	14.50

See notes on page 19

COMBINATION RATINGS CONTINUED

ARI Ref. No.	Model Number	Indoor Model	Furnace Model	Capacity	EER	SEER
3163015	24ABB330A31	CNPV*3617A**	58MEB060−12	27200	12.00	14.50
3163016	24ABB330A31	CNPV*3617A**	58MEB080−12	27000	12.00	14.50
3163017	24ABB330A31	CNPV*3617A**	58MEB080−16	27800	11.70	14.00
3163011	24ABB330A31	CNPV*3617A**	58MV(B,C)060−14	27600	11.70	14.00
3163013	24ABB330A31	CNPV*3617A**	58PH*070−16	27400	11.50	14.00
3163010	24ABB330A31	CNPV*3617A**+TDR		27400	10.80	13.00
3163022	24ABB330A31	CNPV*3621A**	58CV(A,X)110−20	27400	11.70	14.00
3163019	24ABB330A31	CNPV*3621A**	58MV(B,C)080−14	27200	11.70	14.00
3163020	24ABB330A31	CNPV*3621A**	58MV(B,C)080−20	27400	11.70	14.00
3163021	24ABB330A31	CNPV*3621A**	58MV(B,C)100−20	27200	11.70	14.00
3163023	24ABB330A31	CNPV*3621A**	58PH*090−16	27600	11.70	14.00
3163018	24ABB330A31	CNPV*3621A**+TDR		27400	10.80	13.00
3163068	24ABB330A31	CSPH*3012A**	58CV(A,X)070−12	27200	11.70	13.50
3163069	24ABB330A31	CSPH*3012A**	58CV(A,X)090−16	27400	11.70	14.00
3163070	24ABB330A31	CSPH*3012A**	58CV(A,X)110−20	27600	11.70	14.00
3163071	24ABB330A31	CSPH*3012A**	58CV(A,X)135−22	27600	11.70	14.00
3163072	24ABB330A31	CSPH*3012A**	58CV(A,X)155−22	27600	12.00	14.00
3163075	24ABB330A31	CSPH*3012A**	58MEB040−12	27800	12.00	14.00
3163076	24ABB330A31	CSPH*3012A**	58MEB060−12	27800	11.70	14.00
3163077	24ABB330A31	CSPH*3012A**	58MEB080−12	27600	11.70	14.00
3163078	24ABB330A31	CSPH*3012A**	58MEB080−16	27800	11.70	14.00
3163063	24ABB330A31	CSPH*3012A**	58MV(B,C)060−14	27600	11.70	14.00
3163064	24ABB330A31	CSPH*3012A**	58MV(B,C)080−14	27400	11.70	14.00
3163065	24ABB330A31	CSPH*3012A**	58MV(B,C)080−20	27400	11.70	14.00
3163066	24ABB330A31	CSPH*3012A**	58MV(B,C)100−20	27200	11.70	14.00
3163067	24ABB330A31	CSPH*3012A**	58MV(B,C)120−20	27600	11.70	14.00
3163062	24ABB330A31	CSPH*3012A**	58MVB040−14	27400	11.70	13.50
3163073	24ABB330A31	CSPH*3012A**	58PH*070−16	27600	11.50	13.50
3163074	24ABB330A31	CSPH*3012A**	58PH*090−16	27600	11.70	14.00
3163061	24ABB330A31	CSPH*3012A**+TDR		27400	10.80	13.00
3163086	24ABB330A31	CSPH*3612A**	58CV(A,X)070−12	27800	12.00	14.00
3163087	24ABB330A31	CSPH*3612A**	58CV(A,X)090−16	27800	12.00	14.00
3163088	24ABB330A31	CSPH*3612A**	58CV(A,X)110−20	27800	12.00	14.00
3163089	24ABB330A31	CSPH*3612A**	58CV(A,X)135−22	27800	12.00	14.00
3163090	24ABB330A31	CSPH*3612A**	58CV(A,X)155−22	27800	12.00	14.00
3163093	24ABB330A31	CSPH*3612A**	58MEB040−12	27400	12.00	14.50
3163094	24ABB330A31	CSPH*3612A**	58MEB060−12	27400	12.00	14.50
3163095	24ABB330A31	CSPH*3612A**	58MEB080−12	27400	12.00	14.50
3163096	24ABB330A31	CSPH*3612A**	58MEB080−16	27800	12.00	14.00
3163081	24ABB330A31	CSPH*3612A**	58MV(B,C)060−14	28000	12.00	14.00
3163082	24ABB330A31	CSPH*3612A**	58MV(B,C)080−14	27800	12.00	14.00
3163083	24ABB330A31	CSPH*3612A**	58MV(B,C)080−20	27800	12.00	14.00
3163084	24ABB330A31	CSPH*3612A**	58MV(B,C)100−20	27600	12.00	14.00
3163085	24ABB330A31	CSPH*3612A**	58MV(B,C)120−20	28000	12.00	14.00
3163080	24ABB330A31	CSPH*3612A**	58MVB040−14	27800	12.00	14.00
3163091	24ABB330A31	CSPH*3612A**	58PH*070−16	27800	11.70	13.50
3163092	24ABB330A31	CSPH*3612A**	58PH*090−16	27800	12.00	14.00
3163079	24ABB330A31	CSPH*3612A**+TDR		27400	10.80	13.00
3162969	24ABB330A31	FE4AN(B,F)003+UI		27600	12.20	14.50
3162970	24ABB330A31	FE4AN(B,F)005+UI		28400	12.20	14.50
3162968	24ABB330A31	FE4ANF002+UI		27600	11.70	14.00
3162971	24ABB330A31	FF1ENP036		27400	10.90	13.00
3162973	24ABB330A31	FV4BN(B,F)003		27600	12.20	14.50
3162974	24ABB330A31	FV4BN(B,F)005		28400	12.20	14.50
3162972	24ABB330A31	FV4BNF002		26800	11.70	13.50
3162967	24ABB330A31	FX4CN(B,F)036		27800	11.50	13.50
3162966	24ABB330A31	FX4CNF030		27600	11.70	14.00
3162965	24ABB330A31	FY4ANF030		27000	10.90	13.00
3012422	24ABB336A31	†CAP**3617A**+TDR		33800	10.90	13.00
3012446	24ABB336A31	CAP**3614A**	58CV(A,X)070−12	32400	11.50	13.50
3012445	24ABB336A31	CAP**3614A**+TDR		32800	10.90	13.00
3012448	24ABB336A31	CAP**3617A**	58CV(A,X)090−16	33400	11.70	14.00
3099408	24ABB336A31	CAP**3617A**	58MEB040−12	33600	11.70	14.00
3099409	24ABB336A31	CAP**3617A**	58MEB060−12	33600	11.70	14.00
3099410	24ABB336A31	CAP**3617A**	58MEB080−12	33600	11.70	14.00
3099411	24ABB336A31	CAP**3617A**	58MEB080−16	33600	11.70	14.00
3012447	24ABB336A31	CAP**3617A**	58MV(B,C)060−14	33600	11.50	13.50
3012423	24ABB336A31	CAP**3617A**	58PH*070−16	33400	11.20	13.50
3012453	24ABB336A31	CAP**3621A**	58CV(A,X)110−20	33400	11.70	14.00
3099412	24ABB336A31	CAP**3621A**	58MEB100−20	33600	12.00	14.00
3012450	24ABB336A31	CAP**3621A**	58MV(B,C)080−14	33400	11.50	13.50
3012451	24ABB336A31	CAP**3621A**	58MV(B,C)080−20	33400	11.70	14.00
3012452	24ABB336A31	CAP**3621A**	58MV(B,C)100−20	33600	11.70	14.00
3012424	24ABB336A31	CAP**3621A**	58PH*090−16	33800	12.00	14.00
3012425	24ABB336A31	CAP**3621A**	58PH*110−20	34000	12.00	14.00
3012449	24ABB336A31	CAP**3621A**+TDR		33800	10.90	13.00
3012458	24ABB336A31	CAP**4221A**	58CV(A,X)110−20	33600	12.00	14.00
3099413	24ABB336A31	CAP**4221A**	58MEB100−20	33800	12.00	14.00

See notes on page 19

COMBINATION RATINGS CONTINUED

ARI Ref. No.	Model Number	Indoor Model	Furnace Model	Capacity	EER	SEER
3012455	24ABB336A31	CAP**4221A**	58MV(B,C)080−14	33600	11.50	13.50
3012456	24ABB336A31	CAP**4221A**	58MV(B,C)080−20	33600	11.70	14.00
3012457	24ABB336A31	CAP**4221A**	58MV(B,C)100−20	33800	11.70	14.00
3012426	24ABB336A31	CAP**4221A**	58PH*090−16	34000	12.00	14.00
3012427	24ABB336A31	CAP**4221A**	58PH*110−20	34200	12.00	14.00
3012454	24ABB336A31	CAP**4221A**+TDR		34000	10.90	13.00
3012462	24ABB336A31	CAP**4224A**	58CV(A,X)135−22	33600	12.00	14.00
3012463	24ABB336A31	CAP**4224A**	58CV(A,X)155−22	33800	12.00	14.00
3038470	24ABB336A31	CAP**4224A**	58MV(B,C)040−14	33400	11.70	13.50
3012461	24ABB336A31	CAP**4224A**	58MV(B,C)120−20	33600	12.00	14.00
3012460	24ABB336A31	CAP**4224A**	58MVB040−14	33400	11.70	13.50
3012459	24ABB336A31	CAP**4224A**+TDR		33800	10.90	13.00
3012501	24ABB336A31	CNPF*3618A**+TDR		33800	10.90	13.00
3012484	24ABB336A31	CNPH*3617A**	58CV(A,X)070−12	33200	11.50	13.50
3012485	24ABB336A31	CNPH*3617A**	58CV(A,X)090−16	33200	11.50	13.50
3012486	24ABB336A31	CNPH*3617A**	58CV(A,X)110−20	33400	11.50	13.50
3012487	24ABB336A31	CNPH*3617A**	58CV(A,X)135−22	33400	11.70	14.00
3012488	24ABB336A31	CNPH*3617A**	58CV(A,X)155−22	33400	11.70	14.00
3099428	24ABB336A31	CNPH*3617A**	58MEB040−12	33400	11.70	14.00
3099429	24ABB336A31	CNPH*3617A**	58MEB060−12	33400	11.70	14.00
3099430	24ABB336A31	CNPH*3617A**	58MEB080−12	33400	11.70	14.00
3099431	24ABB336A31	CNPH*3617A**	58MEB080−16	33400	11.70	14.00
3099432	24ABB336A31	CNPH*3617A**	58MEB100−20	33200	11.70	14.00
3038471	24ABB336A31	CNPH*3617A**	58MV(B,C)040−14	33200	11.50	13.50
3012479	24ABB336A31	CNPH*3617A**	58MV(B,C)060−14	33400	11.50	13.50
3012480	24ABB336A31	CNPH*3617A**	58MV(B,C)080−14	33200	11.50	13.50
3012481	24ABB336A31	CNPH*3617A**	58MV(B,C)080−20	33200	11.50	13.50
3012482	24ABB336A31	CNPH*3617A**	58MV(B,C)100−20	33400	11.50	13.50
3012483	24ABB336A31	CNPH*3617A**	58MV(B,C)120−20	33400	11.50	13.50
3012478	24ABB336A31	CNPH*3617A**	58MVB040−14	33200	11.50	13.50
3012433	24ABB336A31	CNPH*3617A**	58PH*070−16	33200	11.00	13.50
3012434	24ABB336A31	CNPH*3617A**	58PH*090−16	33400	11.70	14.00
3012435	24ABB336A31	CNPH*3617A**	58PH*110−20	33600	11.70	14.00
3012477	24ABB336A31	CNPH*3617A**+TDR		33800	10.90	13.00
3012496	24ABB336A31	CNPH*4221A**	58CV(A,X)070−12	33600	11.50	13.50
3012497	24ABB336A31	CNPH*4221A**	58CV(A,X)090−16	33600	11.70	14.00
3012498	24ABB336A31	CNPH*4221A**	58CV(A,X)110−20	33800	11.70	14.00
3012499	24ABB336A31	CNPH*4221A**	58CV(A,X)135−22	33600	12.00	14.00
3012500	24ABB336A31	CNPH*4221A**	58CV(A,X)155−22	33800	12.00	14.00
3099433	24ABB336A31	CNPH*4221A**	58MEB040−12	33800	11.70	14.00
3099434	24ABB336A31	CNPH*4221A**	58MEB060−12	33800	11.70	14.00
3099435	24ABB336A31	CNPH*4221A**	58MEB080−12	33800	11.70	14.00
3099436	24ABB336A31	CNPH*4221A**	58MEB080−16	33800	11.70	14.00
3099437	24ABB336A31	CNPH*4221A**	58MEB100−20	33800	11.70	14.00
3038472	24ABB336A31	CNPH*4221A**	58MV(B,C)040−14	33400	11.50	13.50
3012491	24ABB336A31	CNPH*4221A**	58MV(B,C)060−14	33800	11.70	14.00
3012492	24ABB336A31	CNPH*4221A**	58MV(B,C)080−14	33600	11.50	13.50
3012493	24ABB336A31	CNPH*4221A**	58MV(B,C)080−20	33600	11.70	14.00
3012494	24ABB336A31	CNPH*4221A**	58MV(B,C)100−20	33800	11.70	14.00
3012495	24ABB336A31	CNPH*4221A**	58MV(B,C)120−20	33600	11.70	14.00
3012490	24ABB336A31	CNPH*4221A**	58MVB040−14	33400	11.50	13.50
3012436	24ABB336A31	CNPH*4221A**	58PH*070−16	33600	11.20	13.50
3012437	24ABB336A31	CNPH*4221A**	58PH*090−16	34000	12.00	14.00
3012438	24ABB336A31	CNPH*4221A**	58PH*110−20	34000	12.00	14.00
3012489	24ABB336A31	CNPH*4221A**+TDR		34000	10.90	13.00
3012466	24ABB336A31	CNPV*3617A**	58CV(A,X)090−16	33200	11.50	13.50
3099414	24ABB336A31	CNPV*3617A**	58MEB040−12	33400	11.70	14.00
3099415	24ABB336A31	CNPV*3617A**	58MEB060−12	33400	11.70	14.00
3099416	24ABB336A31	CNPV*3617A**	58MEB080−12	33400	11.70	14.00
3099417	24ABB336A31	CNPV*3617A**	58MEB080−16	33400	11.70	14.00
3012465	24ABB336A31	CNPV*3617A**	58MV(B,C)060−14	33400	11.50	13.50
3012428	24ABB336A31	CNPV*3617A**	58PH*070−16	33200	11.20	13.50
3012464	24ABB336A31	CNPV*3617A**+TDR		33800	10.90	13.00
3012471	24ABB336A31	CNPV*3621A**	58CV(A,X)110−20	33400	11.50	13.50
3099418	24ABB336A31	CNPV*3621A**	58MEB100−20	33400	11.70	14.00
3012468	24ABB336A31	CNPV*3621A**	58MV(B,C)080−14	33200	11.50	13.50
3012469	24ABB336A31	CNPV*3621A**	58MV(B,C)080−20	33200	11.50	13.50
3012470	24ABB336A31	CNPV*3621A**	58MV(B,C)100−20	33400	11.50	13.50
3012429	24ABB336A31	CNPV*3621A**	58PH*090−16	33400	11.70	14.00
3012430	24ABB336A31	CNPV*3621A**	58PH*110−20	33600	11.70	14.00
3012467	24ABB336A31	CNPV*3621A**+TDR		33800	10.90	13.00
3099421	24ABB336A31	CNPV*4217A**	58CV(A,X)090−16	33800	11.70	14.00
3099423	24ABB336A31	CNPV*4217A**	58MEB040−12	33800	11.70	14.00
3099424	24ABB336A31	CNPV*4217A**	58MEB060−12	33800	11.70	14.00
3099425	24ABB336A31	CNPV*4217A**	58MEB080−12	33800	11.70	14.00
3099426	24ABB336A31	CNPV*4217A**	58MEB080−16	33800	11.70	14.00
3099420	24ABB336A31	CNPV*4217A**	58MV(B,C)060−14	33800	11.70	14.00
3099422	24ABB336A31	CNPV*4217A**	58PH*070−16	33800	11.70	14.00
3099419	24ABB336A31	CNPV*4217A**+TDR		33800	11.00	13.00

See notes on page 19

COMBINATION RATINGS CONTINUED

ARI Ref. No.	Model Number	Indoor Model	Furnace Model	Capacity	EER	SEER
3012476	24ABB336A31	CNPV*4221A**	58CV(A,X)110−20	33800	11.70	14.00
3099427	24ABB336A31	CNPV*4221A**	58MEB100−20	33800	11.70	14.00
3012473	24ABB336A31	CNPV*4221A**	58MV(B,C)080−14	33600	11.50	13.50
3012474	24ABB336A31	CNPV*4221A**	58MV(B,C)080−20	33600	11.70	14.00
3012475	24ABB336A31	CNPV*4221A**	58MV(B,C)100−20	33800	11.70	14.00
3012431	24ABB336A31	CNPV*4221A**	58PH*090−16	34000	12.00	14.00
3012432	24ABB336A31	CNPV*4221A**	58PH*110−20	34000	12.00	14.00
3012472	24ABB336A31	CNPV*4221A**+TDR		34000	10.90	13.00
3012509	24ABB336A31	CSPH*3612A**	58CV(A,X)070−12	33600	11.70	14.00
3012510	24ABB336A31	CSPH*3612A**	58CV(A,X)090−16	33600	12.00	14.00
3012511	24ABB336A31	CSPH*3612A**	58CV(A,X)110−20	33600	12.00	14.00
3012512	24ABB336A31	CSPH*3612A**	58CV(A,X)135−22	33600	12.00	14.00
3012513	24ABB336A31	CSPH*3612A**	58CV(A,X)155−22	33600	12.00	14.00
3099438	24ABB336A31	CSPH*3612A**	58MEB040−12	33800	11.70	14.00
3099439	24ABB336A31	CSPH*3612A**	58MEB060−12	33800	11.70	14.00
3099440	24ABB336A31	CSPH*3612A**	58MEB080−12	33800	11.70	14.00
3099441	24ABB336A31	CSPH*3612A**	58MEB080−16	33800	11.70	14.00
3099442	24ABB336A31	CSPH*3612A**	58MEB100−20	33800	11.70	14.00
3038473	24ABB336A31	CSPH*3612A**	58MV(B,C)040−14	33600	11.50	13.50
3012504	24ABB336A31	CSPH*3612A**	58MV(B,C)060−14	33600	12.00	14.00
3012505	24ABB336A31	CSPH*3612A**	58MV(B,C)080−14	33400	11.70	14.00
3012506	24ABB336A31	CSPH*3612A**	58MV(B,C)080−20	33600	11.70	14.00
3012507	24ABB336A31	CSPH*3612A**	58MV(B,C)100−20	33400	12.00	14.00
3012508	24ABB336A31	CSPH*3612A**	58MV(B,C)120−20	33600	12.00	14.00
3012503	24ABB336A31	CSPH*3612A**	58MVB040−14	33600	11.50	13.50
3012439	24ABB336A31	CSPH*3612A**	58PH*070−16	34000	11.50	13.50
3012440	24ABB336A31	CSPH*3612A**	58PH*090−16	34400	12.00	14.00
3012441	24ABB336A31	CSPH*3612A**	58PH*110−20	34400	12.00	14.00
3012502	24ABB336A31	CSPH*3612A**+TDR		33800	11.00	13.00
3012521	24ABB336A31	CSPH*4212A**	58CV(A,X)070−12	33600	11.70	14.00
3012522	24ABB336A31	CSPH*4212A**	58CV(A,X)090−16	33600	12.00	14.00
3012523	24ABB336A31	CSPH*4212A**	58CV(A,X)110−20	33800	12.00	14.00
3012524	24ABB336A31	CSPH*4212A**	58CV(A,X)135−22	33600	12.00	14.00
3012525	24ABB336A31	CSPH*4212A**	58CV(A,X)155−22	33800	12.00	14.00
3099443	24ABB336A31	CSPH*4212A**	58MEB040−12	33800	11.70	14.00
3099444	24ABB336A31	CSPH*4212A**	58MEB060−12	33800	11.70	14.00
3099445	24ABB336A31	CSPH*4212A**	58MEB080−12	33800	11.70	14.00
3099446	24ABB336A31	CSPH*4212A**	58MEB080−16	33800	11.70	14.00
3099447	24ABB336A31	CSPH*4212A**	58MEB100−20	33800	11.70	14.00
3038474	24ABB336A31	CSPH*4212A**	58MV(B,C)040−14	33600	11.70	14.00
3012516	24ABB336A31	CSPH*4212A**	58MV(B,C)060−14	33800	12.00	14.00
3012517	24ABB336A31	CSPH*4212A**	58MV(B,C)080−14	33600	11.70	14.00
3012518	24ABB336A31	CSPH*4212A**	58MV(B,C)080−20	33600	12.00	14.00
3012519	24ABB336A31	CSPH*4212A**	58MV(B,C)100−20	33800	12.00	14.00
3012520	24ABB336A31	CSPH*4212A**	58MV(B,C)120−20	33600	12.00	14.00
3012515	24ABB336A31	CSPH*4212A**	58MVB040−14	33600	11.70	14.00
3012442	24ABB336A31	CSPH*4212A**	58PH*070−16	34400	11.70	14.00
3012443	24ABB336A31	CSPH*4212A**	58PH*090−16	34600	12.00	14.00
3012444	24ABB336A31	CSPH*4212A**	58PH*110−20	34800	12.00	14.00
3012514	24ABB336A31	CSPH*4212A**+TDR		34000	11.00	13.00
3012531	24ABB336A31	FE4AN(B,F)003+UI		33600	12.00	14.00
3012532	24ABB336A31	FE4AN(B,F)005+UI		34800	12.00	14.00
3012533	24ABB336A31	FE4ANB006+UI		35200	12.00	14.00
3012530	24ABB336A31	FE4ANF002+UI		33400	11.50	13.50
3012534	24ABB336A31	FE5ANB004+UI		35000	12.00	14.00
3012535	24ABB336A31	FF1ENP036		33600	10.90	13.00
3012537	24ABB336A31	FV4BN(B,F)003		33600	12.00	14.00
3012538	24ABB336A31	FV4BN(B,F)005		34800	12.00	14.00
3012539	24ABB336A31	FV4BNB006		35200	12.00	14.00
3012536	24ABB336A31	FV4BNF002		33400	11.50	13.50
3012528	24ABB336A31	FX4CN(B,F)036		34000	11.70	14.00
3012529	24ABB336A31	FX4CN(B,F)042		34800	11.70	14.00
3012526	24ABB336A31	FY4ANF036		33200	10.90	13.00
3012527	24ABB336A31	FY4ANF042		34200	11.00	13.00
3038475	24ABB342A30	†CAP**4221A**+TDR		41000	11.00	13.00
3038505	24ABB342A30	CAP**4221A**	58CV(A,X)110−20	40500	11.20	13.50
3099339	24ABB342A30	CAP**4221A**	58MEB100−20	40500	11.70	14.00
3038504	24ABB342A30	CAP**4221A**	58MV(B,C)080−14	40000	11.20	13.50
3038476	24ABB342A30	CAP**4221A**	58PH*090−16	40500	11.70	14.00
3038477	24ABB342A30	CAP**4221A**	58PH*110−20	40500	12.00	14.00
3038508	24ABB342A30	CAP**4224A**	58CV(A,X)135−22	40500	11.50	14.00
3099340	24ABB342A30	CAP**4224A**	58MEB120−20	40500	12.00	14.00
3038507	24ABB342A30	CAP**4224A**	58MV(B,C)040−14	40000	11.20	13.50
3038478	24ABB342A30	CAP**4224A**	58PH*135−20	40500	12.00	14.00
3038506	24ABB342A30	CAP**4224A**+TDR		41000	11.00	13.00
3038511	24ABB342A30	CAP**4817A**	58CV(A,X)090−16	40000	11.50	14.00
3099341	24ABB342A30	CAP**4817A**	58MEB040−12	41000	11.70	14.00
3099342	24ABB342A30	CAP**4817A**	58MEB060−12	41000	11.70	14.00

See notes on page 19

COMBINATION RATINGS CONTINUED

ARI Ref. No.	Model Number	Indoor Model	Furnace Model	Capacity	EER	SEER
3099343	24ABB342A30	CAP**4817A**	58MEB080−12	41000	11.70	14.00
3099344	24ABB342A30	CAP**4817A**	58MEB080−16	41000	11.70	14.00
3038510	24ABB342A30	CAP**4817A**	58MV(B,C)060−14	40000	11.50	14.00
3038479	24ABB342A30	CAP**4817A**	58PH*070−16	39500	11.20	13.50
3038509	24ABB342A30	CAP**4817A**+TDR		40500	11.00	13.20
3038514	24ABB342A30	CAP**4821A**	58CV(A,X)110−20	41000	11.50	14.00
3099345	24ABB342A30	CAP**4821A**	58MEB100−20	41000	12.00	14.00
3038513	24ABB342A30	CAP**4821A**	58MV(B,C)080−14	40500	11.20	13.50
3038480	24ABB342A30	CAP**4821A**	58PH*090−16	41000	12.00	14.00
3038481	24ABB342A30	CAP**4821A**	58PH*110−20	41000	12.00	14.00
3038512	24ABB342A30	CAP**4821A**+TDR		41500	11.00	13.20
3038517	24ABB342A30	CAP**4824A**	58CV(A,X)135−22	41000	11.70	14.00
3038516	24ABB342A30	CAP**4824A**	58MV(B,C)040−14	41000	11.20	13.50
3038482	24ABB342A30	CAP**4824A**	58PH*135−20	41000	12.00	14.00
3038515	24ABB342A30	CAP**4824A**+TDR		41500	11.00	13.20
3038533	24ABB342A30	CNPF*4818A**+TDR		41500	11.00	13.20
3038529	24ABB342A30	CNPH*4221A**	58CV(A,X)070−12	40500	11.20	13.50
3099357	24ABB342A30	CNPH*4221A**	58MEB040−12	40500	11.70	14.00
3099358	24ABB342A30	CNPH*4221A**	58MEB060−12	40500	11.50	13.50
3099359	24ABB342A30	CNPH*4221A**	58MEB080−12	40500	11.70	14.00
3099360	24ABB342A30	CNPH*4221A**	58MEB080−16	40000	11.70	14.00
3099361	24ABB342A30	CNPH*4221A**	58MEB100−20	40500	11.70	14.00
3099362	24ABB342A30	CNPH*4221A**	58MEB120−20	40500	11.70	14.00
3038528	24ABB342A30	CNPH*4221A**	58MV(B,C)040−14	40000	11.20	13.50
3038488	24ABB342A30	CNPH*4221A**	58PH*070−16	40000	11.20	13.20
3038489	24ABB342A30	CNPH*4221A**	58PH*090−16	40500	11.70	14.00
3038490	24ABB342A30	CNPH*4221A**	58PH*110−20	40500	12.00	14.00
3038491	24ABB342A30	CNPH*4221A**	58PH*135−20	40500	11.70	14.00
3038527	24ABB342A30	CNPH*4221A**+TDR		41000	11.00	13.00
3038532	24ABB342A30	CNPH*4821A**	58CV(A,X)070−12	41000	11.20	13.50
3099363	24ABB342A30	CNPH*4821A**	58MEB040−12	41000	11.70	14.00
3099364	24ABB342A30	CNPH*4821A**	58MEB060−12	41000	11.70	14.00
3099365	24ABB342A30	CNPH*4821A**	58MEB080−12	41000	11.70	14.00
3099366	24ABB342A30	CNPH*4821A**	58MEB080−16	41000	11.70	14.00
3099367	24ABB342A30	CNPH*4821A**	58MEB100−20	41000	12.00	14.00
3099368	24ABB342A30	CNPH*4821A**	58MEB120−20	41000	12.00	14.00
3038531	24ABB342A30	CNPH*4821A**	58MV(B,C)040−14	40500	11.20	13.50
3038492	24ABB342A30	CNPH*4821A**	58PH*070−16	41000	11.20	13.50
3038493	24ABB342A30	CNPH*4821A**	58PH*090−16	41000	12.00	14.00
3038494	24ABB342A30	CNPH*4821A**	58PH*110−20	41000	12.00	14.00
3038495	24ABB342A30	CNPH*4821A**	58PH*135−20	41000	12.00	14.00
3038530	24ABB342A30	CNPH*4821A**+TDR		41500	11.00	13.20
3099348	24ABB342A30	CNPV*4217A**	58CV(A,X)090−16	40500	11.70	14.00
3099350	24ABB342A30	CNPV*4217A**	58MEB040−12	41000	11.70	14.00
3099351	24ABB342A30	CNPV*4217A**	58MEB060−12	41000	11.70	14.00
3099352	24ABB342A30	CNPV*4217A**	58MEB080−12	41000	11.70	14.00
3099353	24ABB342A30	CNPV*4217A**	58MEB080−16	40500	11.70	14.00
3099347	24ABB342A30	CNPV*4217A**	58MV(B,C)060−14	40500	11.50	13.50
3099349	24ABB342A30	CNPV*4217A**	58PH*070−16	40500	11.20	13.50
3099346	24ABB342A30	CNPV*4217A**+TDR		41000	11.00	13.00
3038520	24ABB342A30	CNPV*4221A**	58CV(A,X)110−20	40500	11.50	14.00
3099354	24ABB342A30	CNPV*4221A**	58MEB100−20	40500	11.70	14.00
3038519	24ABB342A30	CNPV*4221A**	58MV(B,C)080−14	40000	11.20	13.50
3038483	24ABB342A30	CNPV*4221A**	58PH*090−16	40500	11.70	14.00
3038484	24ABB342A30	CNPV*4221A**	58PH*110−20	40500	12.00	14.00
3038518	24ABB342A30	CNPV*4221A**+TDR		41000	11.00	13.00
3038523	24ABB342A30	CNPV*4821A**	58CV(A,X)110−20	41000	11.50	14.00
3099355	24ABB342A30	CNPV*4821A**	58MEB100−20	41000	12.00	14.00
3038522	24ABB342A30	CNPV*4821A**	58MV(B,C)080−14	40500	11.20	13.50
3038485	24ABB342A30	CNPV*4821A**	58PH*090−16	41000	12.00	14.00
3038486	24ABB342A30	CNPV*4821A**	58PH*110−20	41000	12.00	14.00
3038521	24ABB342A30	CNPV*4821A**+TDR		41500	11.00	13.20
3038526	24ABB342A30	CNPV*4824A**	58CV(A,X)135−22	41000	11.70	14.00
3099356	24ABB342A30	CNPV*4824A**	58MEB120−20	41000	12.00	14.00
3038525	24ABB342A30	CNPV*4824A**	58MV(B,C)040−14	41000	11.20	13.50
3038487	24ABB342A30	CNPV*4824A**	58PH*135−20	41000	12.00	14.00
3038524	24ABB342A30	CNPV*4824A**+TDR		41500	11.00	13.20
3038536	24ABB342A30	CSPH*4212A**	58CV(A,X)070−12	40500	11.20	13.50
3099369	24ABB342A30	CSPH*4212A**	58MEB040−12	41000	11.70	14.00
3099370	24ABB342A30	CSPH*4212A**	58MEB060−12	41000	11.70	14.00
3099371	24ABB342A30	CSPH*4212A**	58MEB080−12	41000	11.70	14.00
3099372	24ABB342A30	CSPH*4212A**	58MEB080−16	41000	11.70	14.00
3099373	24ABB342A30	CSPH*4212A**	58MEB100−20	41000	12.00	14.00
3099374	24ABB342A30	CSPH*4212A**	58MEB120−20	41000	12.00	14.00
3038535	24ABB342A30	CSPH*4212A**	58MV(B,C)040−14	40000	11.20	13.50
3038496	24ABB342A30	CSPH*4212A**	58PH*070−16	40500	11.50	13.50
3038497	24ABB342A30	CSPH*4212A**	58PH*090−16	40500	11.70	14.00
3038498	24ABB342A30	CSPH*4212A**	58PH*110−20	40500	12.00	14.00
3038499	24ABB342A30	CSPH*4212A**	58PH*135−20	40500	12.00	14.00

See notes on page 19

COMBINATION RATINGS CONTINUED

ARI Ref. No.	Model Number	Indoor Model	Furnace Model	Capacity	EER	SEER
3038534	24ABB342A30	CSPH*4212A**+TDR		41000	11.00	13.20
3038539	24ABB342A30	CSPH*4812A**	58CV(A,X)070−12	41000	11.20	13.50
3099375	24ABB342A30	CSPH*4812A**	58MEB040−12	41000	11.70	14.00
3099376	24ABB342A30	CSPH*4812A**	58MEB060−12	41000	11.70	14.00
3099377	24ABB342A30	CSPH*4812A**	58MEB080−12	41000	11.70	14.00
3099378	24ABB342A30	CSPH*4812A**	58MEB080−16	41000	11.70	14.00
3099379	24ABB342A30	CSPH*4812A**	58MEB100−20	41000	12.00	14.00
3099380	24ABB342A30	CSPH*4812A**	58MEB120−20	41000	12.00	14.00
3038538	24ABB342A30	CSPH*4812A**	58MV(B,C)040−14	41000	11.20	13.50
3038500	24ABB342A30	CSPH*4812A**	58PH*070−16	41000	11.20	13.50
3038501	24ABB342A30	CSPH*4812A**	58PH*090−16	41000	12.00	14.00
3038502	24ABB342A30	CSPH*4812A**	58PH*110−20	41000	12.00	14.00
3038503	24ABB342A30	CSPH*4812A**	58PH*135−20	41000	12.00	14.00
3038537	24ABB342A30	CSPH*4812A**+TDR		41500	11.00	13.20
3038544	24ABB342A30	FV4BN(B,F)003		40500	11.50	14.00
3038545	24ABB342A30	FV4BN(B,F)005		41500	11.70	14.00
3038546	24ABB342A30	FV4BNB006		42500	12.00	14.00
3038542	24ABB342A30	FX4CN(B,F)042		41500	11.20	13.50
3038543	24ABB342A30	FX4CN(B,F)048		42500	11.50	14.00
3038540	24ABB342A30	FY4ANF042		41000	11.00	13.00
3038541	24ABB342A30	FY4ANF048		42000	11.00	13.20
3022709	24ABB348A31	†CAP**4821A**+TDR		46000	11.00	13.20
3022711	24ABB348A31	CAP**4817A**	58CV(A,X)090−16	45000	11.50	13.50
3099388	24ABB348A31	CAP**4817A**	58MEB080−16	45000	11.00	13.50
3022710	24ABB348A31	CAP**4817A**+TDR		45000	11.00	13.20
3022714	24ABB348A31	CAP**4821A**	58CV(A,X)110−20	45000	11.70	13.50
3099389	24ABB348A31	CAP**4821A**	58MEB100−20	45000	11.70	14.00
3022712	24ABB348A31	CAP**4821A**	58MV(B,C)080−20	44500	11.50	13.50
3022713	24ABB348A31	CAP**4821A**	58MV(B,C)100−20	45000	11.20	13.50
3022715	24ABB348A31	CAP**4821A**	58PH*090−16	45000	11.70	13.50
3022716	24ABB348A31	CAP**4821A**	58PH*110−20	45000	11.70	14.00
3022719	24ABB348A31	CAP**4824A**	58CV(A,X)135−22	45000	11.70	14.00
3022720	24ABB348A31	CAP**4824A**	58CV(A,X)155−22	45000	12.00	14.00
3099390	24ABB348A31	CAP**4824A**	58MEB120−20	45000	11.70	14.00
3022718	24ABB348A31	CAP**4824A**	58MV(B,C)120−20	45000	11.50	13.50
3022721	24ABB348A31	CAP**4824A**	58PH*135−20	45500	11.70	13.50
3022717	24ABB348A31	CAP**4824A**+TDR		45500	11.00	13.20
3022725	24ABB348A31	CAP**6021A**	58CV(A,X)110−20	46000	12.00	14.00
3099391	24ABB348A31	CAP**6021A**	58MEB100−20	45000	12.00	14.00
3022723	24ABB348A31	CAP**6021A**	58MV(B,C)080−20	45000	11.70	13.50
3022724	24ABB348A31	CAP**6021A**	58MV(B,C)100−20	46000	11.70	13.50
3022726	24ABB348A31	CAP**6021A**	58PH*090−16	46000	12.00	14.00
3022727	24ABB348A31	CAP**6021A**	58PH*110−20	46000	12.00	14.00
3022722	24ABB348A31	CAP**6021A**+TDR		46000	11.20	13.20
3022730	24ABB348A31	CAP**6024A**	58CV(A,X)135−22	46000	12.00	14.00
3022731	24ABB348A31	CAP**6024A**	58CV(A,X)155−22	46000	12.20	14.50
3099392	24ABB348A31	CAP**6024A**	58MEB120−20	45000	12.00	14.00
3022729	24ABB348A31	CAP**6024A**	58MV(B,C)120−20	46000	11.70	14.00
3022732	24ABB348A31	CAP**6024A**	58PH*135−20	46000	12.00	14.00
3022728	24ABB348A31	CAP**6024A**+TDR		46500	11.20	13.20
3022771	24ABB348A31	CNPF*4818A**+TDR		45000	11.00	13.20
3022753	24ABB348A31	CNPH*4821A**	58CV(A,X)090−16	45000	11.70	13.50
3022754	24ABB348A31	CNPH*4821A**	58CV(A,X)110−20	45000	11.70	13.50
3022755	24ABB348A31	CNPH*4821A**	58CV(A,X)135−22	45000	11.70	14.00
3022756	24ABB348A31	CNPH*4821A**	58CV(A,X)155−22	45500	12.00	14.00
3099396	24ABB348A31	CNPH*4821A**	58MEB080−16	45000	11.50	13.50
3099397	24ABB348A31	CNPH*4821A**	58MEB100−20	45000	11.70	14.00
3099398	24ABB348A31	CNPH*4821A**	58MEB120−20	45000	11.70	14.00
3022750	24ABB348A31	CNPH*4821A**	58MV(B,C)080−20	44500	11.50	13.50
3022751	24ABB348A31	CNPH*4821A**	58MV(B,C)100−20	45000	11.20	13.50
3022752	24ABB348A31	CNPH*4821A**	58MV(B,C)120−20	45000	11.70	13.50
3022757	24ABB348A31	CNPH*4821A**	58PH*090−16	45000	11.70	13.50
3022758	24ABB348A31	CNPH*4821A**	58PH*110−20	45000	11.70	14.00
3022759	24ABB348A31	CNPH*4821A**	58PH*135−20	45500	11.70	13.50
3022749	24ABB348A31	CNPH*4821A**+TDR		45500	11.00	13.20
3022764	24ABB348A31	CNPH*6024A**	58CV(A,X)090−16	46000	11.70	14.00
3022765	24ABB348A31	CNPH*6024A**	58CV(A,X)110−20	46000	12.00	14.00
3022766	24ABB348A31	CNPH*6024A**	58CV(A,X)135−22	46000	12.00	14.00
3022767	24ABB348A31	CNPH*6024A**	58CV(A,X)155−22	46000	12.20	14.50
3099399	24ABB348A31	CNPH*6024A**	58MEB080−16	45000	11.50	13.50
3099400	24ABB348A31	CNPH*6024A**	58MEB100−20	45000	12.00	14.00
3099401	24ABB348A31	CNPH*6024A**	58MEB120−20	45000	12.00	14.00
3022761	24ABB348A31	CNPH*6024A**	58MV(B,C)080−20	45500	11.70	13.50
3022762	24ABB348A31	CNPH*6024A**	58MV(B,C)100−20	46000	11.70	13.50
3022763	24ABB348A31	CNPH*6024A**	58MV(B,C)120−20	46000	11.70	14.00
3022768	24ABB348A31	CNPH*6024A**	58PH*090−16	46000	11.70	14.00
3022769	24ABB348A31	CNPH*6024A**	58PH*110−20	46000	12.00	14.00
3022770	24ABB348A31	CNPH*6024A**	58PH*135−20	46000	12.00	14.00

See notes on page 19

COMBINATION RATINGS CONTINUED

ARI Ref. No.	Model Number	Indoor Model	Furnace Model	Capacity	EER	SEER
3022760	24ABB348A31	CNPH*6024A**+TDR		46500	11.20	13.20
3022736	24ABB348A31	CNPV*4821A**	58CV(A,X)110−20	45000	11.70	13.50
3099393	24ABB348A31	CNPV*4821A**	58MEB100−20	45000	11.70	14.00
3022734	24ABB348A31	CNPV*4821A**	58MV(B,C)080−20	44500	11.50	13.50
3022735	24ABB348A31	CNPV*4821A**	58MV(B,C)100−20	45000	11.20	13.50
3022737	24ABB348A31	CNPV*4821A**	58PH*090−16	45000	11.70	13.50
3022738	24ABB348A31	CNPV*4821A**	58PH*110−20	45000	11.70	14.00
3022733	24ABB348A31	CNPV*4821A**+TDR		45500	11.00	13.20
3022741	24ABB348A31	CNPV*4824A**	58CV(A,X)135−22	45000	11.70	14.00
3022742	24ABB348A31	CNPV*4824A**	58CV(A,X)155−22	45000	12.00	14.00
3099394	24ABB348A31	CNPV*4824A**	58MEB120−20	45000	11.70	14.00
3022740	24ABB348A31	CNPV*4824A**	58MV(B,C)120−20	45000	11.50	13.50
3022743	24ABB348A31	CNPV*4824A**	58PH*135−20	45500	11.70	13.50
3022739	24ABB348A31	CNPV*4824A**+TDR		45500	11.00	13.20
3022746	24ABB348A31	CNPV*6024A**	58CV(A,X)135−22	46000	12.00	14.00
3022747	24ABB348A31	CNPV*6024A**	58CV(A,X)155−22	46000	12.20	14.50
3099395	24ABB348A31	CNPV*6024A**	58MEB120−20	45000	12.00	14.00
3022745	24ABB348A31	CNPV*6024A**	58MV(B,C)120−20	46000	11.70	14.00
3022748	24ABB348A31	CNPV*6024A**	58PH*135−20	46000	12.00	14.00
3022744	24ABB348A31	CNPV*6024A**+TDR		46500	11.20	13.20
3022776	24ABB348A31	CSPH*4812A**	58CV(A,X)090−16	45500	11.70	13.50
3022777	24ABB348A31	CSPH*4812A**	58CV(A,X)110−20	45000	11.70	13.50
3022778	24ABB348A31	CSPH*4812A**	58CV(A,X)135−22	45000	11.70	14.00
3022779	24ABB348A31	CSPH*4812A**	58CV(A,X)155−22	45000	12.00	14.00
3099402	24ABB348A31	CSPH*4812A**	58MEB080−16	45000	11.50	13.50
3099403	24ABB348A31	CSPH*4812A**	58MEB100−20	45000	11.70	14.00
3099404	24ABB348A31	CSPH*4812A**	58MEB120−20	45000	11.70	14.00
3022773	24ABB348A31	CSPH*4812A**	58MV(B,C)080−20	44500	11.50	13.50
3022774	24ABB348A31	CSPH*4812A**	58MV(B,C)100−20	45000	11.20	13.50
3022775	24ABB348A31	CSPH*4812A**	58MV(B,C)120−20	45000	11.50	13.50
3022780	24ABB348A31	CSPH*4812A**	58PH*090−16	45000	11.70	13.50
3022781	24ABB348A31	CSPH*4812A**	58PH*110−20	45000	11.70	14.00
3022782	24ABB348A31	CSPH*4812A**	58PH*135−20	45500	11.70	13.50
3022772	24ABB348A31	CSPH*4812A**+TDR		46000	11.00	13.20
3022787	24ABB348A31	CSPH*6012A**	58CV(A,X)090−16	46000	12.00	14.00
3022788	24ABB348A31	CSPH*6012A**	58CV(A,X)110−20	46000	12.00	14.00
3022789	24ABB348A31	CSPH*6012A**	58CV(A,X)135−22	46000	12.00	14.00
3022790	24ABB348A31	CSPH*6012A**	58CV(A,X)155−22	46000	12.20	14.50
3099405	24ABB348A31	CSPH*6012A**	58MEB080−16	45000	11.70	14.00
3099406	24ABB348A31	CSPH*6012A**	58MEB100−20	45000	12.00	14.00
3099407	24ABB348A31	CSPH*6012A**	58MEB120−20	45000	12.00	14.00
3022784	24ABB348A31	CSPH*6012A**	58MV(B,C)080−20	45500	11.70	13.50
3022785	24ABB348A31	CSPH*6012A**	58MV(B,C)100−20	46000	11.70	13.50
3022786	24ABB348A31	CSPH*6012A**	58MV(B,C)120−20	46000	11.70	14.00
3022791	24ABB348A31	CSPH*6012A**	58PH*090−16	46000	12.00	14.00
3022792	24ABB348A31	CSPH*6012A**	58PH*110−20	46000	12.00	14.00
3022793	24ABB348A31	CSPH*6012A**	58PH*135−20	46000	12.00	14.00
3022783	24ABB348A31	CSPH*6012A**+TDR		46500	11.20	13.20
3022798	24ABB348A31	FE4AN(B,F)005+UI		46000	12.00	14.00
3022799	24ABB348A31	FE4ANB006+UI		46500	12.20	14.50
3022800	24ABB348A31	FV4BN(B,F)005		46000	12.00	14.00
3022801	24ABB348A31	FV4BNB006		46500	12.20	14.50
3022796	24ABB348A31	FX4CN(B,F)048		46000	12.00	14.00
3022797	24ABB348A31	FX4CN(B,F)060		47500	12.00	14.00
3022795	24ABB348A31	FY4ANB060		46500	11.20	13.20
3022794	24ABB348A31	FY4ANF048		45500	11.20	13.20
3043527	24ABB360A31	†CAP**6024A**+TDR		57500	11.00	13.00
3043541	24ABB360A31	CAP**6021A**	58CV(A,X)110−20	56000	11.00	13.20
3099381	24ABB360A31	CAP**6021A**	58MEB100−20	56500	11.00	13.20
3043539	24ABB360A31	CAP**6021A**	58MV(B,C)080−20	56000	10.60	13.00
3043540	24ABB360A31	CAP**6021A**	58MV(B,C)100−20	56000	10.80	13.00
3043528	24ABB360A31	CAP**6021A**	58PH*090−16	55500	11.00	13.20
3043529	24ABB360A31	CAP**6021A**	58PH*110−20	56000	11.20	13.20
3043538	24ABB360A31	CAP**6021A**+TDR		56500	11.00	13.00
3043543	24ABB360A31	CAP**6024A**	58CV(A,X)135−22	56500	11.00	13.20
3043544	24ABB360A31	CAP**6024A**	58CV(A,X)155−22	56500	11.20	13.50
3099382	24ABB360A31	CAP**6024A**	58MEB120−20	56500	11.00	13.20
3043542	24ABB360A31	CAP**6024A**	58MV(B,C)120−20	56500	11.00	13.00
3043530	24ABB360A31	CAP**6024A**	58PH*135−20	56000	11.00	13.20
3043549	24ABB360A31	CNPH*6024A**	58CV(A,X)135−22	56000	11.20	13.50
3043550	24ABB360A31	CNPH*6024A**	58CV(A,X)155−22	56500	11.20	13.50
3099384	24ABB360A31	CNPH*6024A**	58MEB100−20	56500	11.00	13.20
3099385	24ABB360A31	CNPH*6024A**	58MEB120−20	56500	11.00	13.20
3043532	24ABB360A31	CNPH*6024A**	58PH*090−16	56000	11.00	13.20
3043533	24ABB360A31	CNPH*6024A**	58PH*110−20	56500	11.20	13.20
3043534	24ABB360A31	CNPH*6024A**	58PH*135−20	56000	11.00	13.20
3043548	24ABB360A31	CNPH*6024A**+TDR		57000	11.00	13.00
3043546	24ABB360A31	CNPV*6024A**	58CV(A,X)135−22	56000	11.00	13.50

See notes on page 19

COMBINATION RATINGS CONTINUED

ARI Ref. No.	Model Number	Indoor Model	Furnace Model	Capacity	EER	SEER
3043547	24ABB360A31	CNPV*6024A**	58CV(A,X)155−22	56500	11.20	13.50
3099383	24ABB360A31	CNPV*6024A**	58MEB120−20	56500	11.00	13.20
3043531	24ABB360A31	CNPV*6024A**	58PH*135−20	56000	11.00	13.20
3043545	24ABB360A31	CNPV*6024A**+TDR		57000	11.00	13.00
3043552	24ABB360A31	CSPH*6012A**	58CV(A,X)110−20	56500	11.00	13.20
3043553	24ABB360A31	CSPH*6012A**	58CV(A,X)135−22	56500	11.20	13.50
3043554	24ABB360A31	CSPH*6012A**	58CV(A,X)155−22	56500	11.20	13.50
3099386	24ABB360A31	CSPH*6012A**	58MEB100−20	56500	11.00	13.20
3099387	24ABB360A31	CSPH*6012A**	58MEB120−20	56500	11.00	13.20
3043535	24ABB360A31	CSPH*6012A**	58PH*090−16	56000	11.00	13.20
3043536	24ABB360A31	CSPH*6012A**	58PH*110−20	56500	11.20	13.20
3043537	24ABB360A31	CSPH*6012A**	58PH*135−20	56000	11.00	13.20
3043551	24ABB360A31	CSPH*6012A**+TDR		57500	11.00	13.00
3069699	24ABB360A31	FE4ANB006+UI		57500	11.50	13.50
3043556	24ABB360A31	FV4BNB006		57000	11.20	13.50
3043555	24ABB360A31	FX4CN(B,F)060		58000	11.00	13.20
3043557	24ABB360A31	FY4ANB060		56500	11.00	13.00

***** Tested combination
EER — Energy Efficiency Ratio
SEER — Seasonal Energy Efficiency Ratio
TDR — Time−Delay Relay
NOTES:
1. In most cases, only 1 method should be used to achieve TDR function. Using more than 1 method in a system may cause degradation in performance. Use either the accessory Time−Delay Relay KAATD0101TDR or a furnace equipped with TDR. Most Carrier furnaces are equipped with TDR.
2. Ratings are net values reflecting the effects of circulating fan motor heat. Supplemental electric heat is not included.
2. Tested outdoor/indoor combinations have been tested in accordance with DOE test procedures for central air conditioners. Ratings for other combinations are determined under DOE computer simulation procedures.
3. Determine actual CFM values obtainable for your system by referring to fan performance data in fan coil or furnace coil literature.
4. Do not apply with capillary tube coils as performance and reliability are affected.

DETAILED COOLING CAPACITIES#

EVAPORATOR AIR		CONDENSER ENTERING AIR TEMPERATURES °F (°C)																	
		75 (23.9)			85 (29.4)			95 (35)			105 (40.6)			115 (46.1)			125 (51.7)		
CFM	EWB °F (°C)	Capacity MBtuh		Total Sys. KW**	Capacity MBtuh		Total Sys. KW**	Capacity MBtuh		Total Sys. KW**	Capacity MBtuh		Total Sys. KW**	Capacity MBtuh		Total Sys. KW**	Capacity MBtuh		Total Sys. KW**
		Total	Sens‡		Total	Sens‡		Total	Sens‡		Total	Sens‡		Total	Sens‡		Total	Sens‡	
24ABB318A31 Outdoor Section With CAP1814A** Indoor Section**																			
525	72 (22.2)	20.79	10.51	1.27	19.89	10.18	1.42	18.93	9.83	1.58	17.94	9.47	1.77	16.87	9.09	1.97	15.67	8.67	2.20
	67 (19.4)	19.09	12.93	1.27	18.24	12.58	1.42	17.33	12.21	1.59	16.39	11.84	1.77	15.37	11.44	1.98	14.26	11.01	2.20
	63 (17.2)††	17.84	12.55	1.27	17.02	12.19	1.42	16.15	11.82	1.59	15.24	11.43	1.78	14.26	11.02	1.98	13.22	10.58	2.20
	62 (16.7)	17.53	15.32	1.27	16.74	14.95	1.42	15.91	14.57	1.59	15.04	14.16	1.78	14.17	14.17	1.98	13.33	13.33	2.20
	57 (13.9)	17.00	17.00	1.27	16.36	16.36	1.42	15.67	15.67	1.59	14.95	14.95	1.78	14.18	14.18	1.98	13.33	13.33	2.20
600	72 (22.2)	21.12	11.01	1.29	20.19	10.67	1.44	19.19	10.32	1.61	18.18	9.96	1.80	17.07	9.57	2.00	15.84	9.15	2.22
	67 (19.4)	19.42	13.74	1.29	18.54	13.39	1.45	17.60	13.02	1.61	16.63	12.65	1.80	15.59	12.24	2.00	14.44	11.80	2.23
	63 (17.2)††	18.17	13.32	1.30	17.32	12.96	1.45	16.43	12.58	1.62	15.49	12.19	1.80	14.48	11.77	2.01	13.40	11.33	2.23
	62 (16.7)	17.93	16.44	1.30	17.12	16.06	1.45	16.30	16.21	1.62	15.53	15.53	1.80	14.71	14.71	2.01	13.81	13.81	2.23
	57 (13.9)	17.70	17.70	1.30	17.02	17.02	1.45	16.29	16.29	1.62	15.53	15.53	1.80	14.71	14.71	2.01	13.81	13.81	2.23
675	72 (22.2)	21.35	11.48	1.32	20.39	11.14	1.47	19.37	10.79	1.64	18.34	10.43	1.83	17.20	10.04	2.03	15.94	9.61	2.25
	67 (19.4)	19.66	14.52	1.32	18.76	14.17	1.47	17.79	13.80	1.64	16.81	13.42	1.83	15.74	13.01	2.03	14.58	12.56	2.25
	63 (17.2)††	18.41	14.06	1.32	17.55	13.70	1.48	16.63	13.31	1.64	15.67	12.92	1.83	14.64	12.49	2.03	13.54	12.03	2.26
	62 (16.7)	18.28	18.11	1.32	17.55	17.55	1.48	16.79	16.79	1.64	15.99	15.99	1.83	15.13	15.13	2.03	14.18	14.18	2.25
	57 (13.9)	18.26	18.26	1.32	17.55	17.55	1.48	16.79	16.79	1.64	15.99	15.99	1.83	15.13	15.13	2.03	14.18	14.18	2.25

COOLING INDOOR MODEL	CAPACITY	POWER	FURNACE MODEL
*CAP**1814A**	1.00	1.00	
CAP**2414A**	1.02	1.01	
CAP**2417A**	1.02	1.01	
CNPF*2418A**	1.02	1.01	
CNPH*2417A**	1.02	1.01	
CNPV*1814A**	1.00	1.00	
CNPV*2414A**	1.02	1.01	
CNPV*2417A**	1.02	1.01	
CSPH*2412A**	1.02	1.01	
FE4ANF002	0.98	0.88	
FF1ENP018	0.99	0.99	
FF1ENP024	0.99	0.99	
FV4BNF002	0.98	0.88	
FX4CNF018	1.02	0.93	
FX4CNF024	1.02	0.91	
FY4ANF018	1.01	1.01	
FY4ANF024	1.02	1.02	
CAP**1814A**	0.99	0.90	58CV(A,X)070–12
CAP**2414A**	1.01	0.90	58CV(A,X)070–12
CNPH*2417A**	1.01	0.90	58CV(A,X)070–12
CNPV*1814A**	0.99	0.90	58CV(A,X)070–12
CNPV*2414A**	1.01	0.90	58CV(A,X)070–12
CSPH*2412A**	1.02	0.91	58CV(A,X)070–12
CAP**2417A**	1.01	0.90	58CV(A,X)090–16
CNPH*2417A**	1.01	0.90	58CV(A,X)090–16
CNPV*2417A**	1.01	0.90	58CV(A,X)090–16
CSPH*2412A**	1.02	0.91	58CV(A,X)090–16
CAP**2417A**	1.02	0.89	58MEB040–12
CNPH*2417A**	1.02	0.91	58MEB040–12
CNPV*2417A**	1.02	0.91	58MEB040–12
CSPH*2412A**	1.02	0.91	58MEB040–12
CAP**2417A**	1.02	0.89	58MEB060–12
CNPH*2417A**	1.02	0.91	58MEB060–12
CNPV*2417A**	1.02	0.91	58MEB060–12

COOLING INDOOR MODEL	CAPACITY	POWER	FURNACE MODEL
CSPH*2412A**	1.02	0.91	58MEB060–12
CAP**2417A**	1.01	0.90	58MV(B,C)060–14
CNPH*2417A**	1.01	0.90	58MV(B,C)060–14
CNPV*2417A**	1.01	0.90	58MV(B,C)060–14
CSPH*2412A**	1.02	0.91	58MV(B,C)060–14
CNPH*2417A**	1.01	0.90	58MV(B,C)080–14
CSPH*2412A**	1.02	0.91	58MV(B,C)080–14
CNPH*2417A**	1.01	0.90	58MVB040–14
CSPH*2412A**	1.01	0.90	58MVB040–14
CAP**1814A**	1.01	0.92	58PH*045–08
CAP**2414A**	1.02	0.91	58PH*045–08
CNPH*2417A**	1.01	0.90	58PH*045–08
CNPV*1814A**	1.01	0.92	58PH*045–08
CNPV*2414A**	1.02	0.91	58PH*045–08
CSPH*2412A**	1.02	0.91	58PH*045–08

See notes on page 26

DETAILED COOLING CAPACITIES# CONTINUED

EVAPORATOR AIR		CONDENSER ENTERING AIR TEMPERATURES °F (°C)																	
		75 (23.9)			85 (29.4)			95 (35)			105 (40.6)			115 (46.1)			125 (51.7)		
CFM	EWB °F (°C)	Capacity MBtuh		Total Sys. KW**	Capacity MBtuh		Total Sys. KW**	Capacity MBtuh		Total Sys. KW**	Capacity MBtuh		Total Sys. KW**	Capacity MBtuh		Total Sys. KW**	Capacity MBtuh		Total Sys. KW**
		Total	Sens‡		Total	Sens‡		Total	Sens‡		Total	Sens‡		Total	Sens‡		Total	Sens‡	
24ABB324A31 Outdoor Section With CAP**2414A** Indoor Section																			
700	72 (22.2)	27.09	13.27	1.65	25.82	12.82	1.85	24.63	12.41	2.06	23.42	12.00	2.30	22.08	11.54	2.56	20.57	11.04	2.84
	67 (19.4)	24.89	16.41	1.65	23.83	15.99	1.84	22.71	15.56	2.05	21.55	15.13	2.29	20.30	14.66	2.56	18.89	14.14	2.84
	63 (17.2)††	23.39	15.98	1.64	22.38	15.55	1.84	21.29	15.11	2.05	20.18	14.66	2.29	18.98	14.17	2.56	17.65	13.64	2.85
	62 (16.7)	23.01	19.56	1.64	22.03	19.14	1.84	20.99	18.67	2.05	19.94	18.19	2.29	18.91	18.91	2.56	17.82	17.82	2.84
	57 (13.9)	22.46	22.46	1.64	21.66	21.66	1.83	20.79	20.79	2.05	19.89	19.89	2.29	18.91	18.91	2.56	17.82	17.82	2.84
800	72 (22.2)	27.52	13.92	1.69	26.15	13.46	1.88	24.91	13.04	2.10	23.67	12.62	2.33	22.29	12.16	2.59	20.73	11.65	2.88
	67 (19.4)	25.25	17.44	1.68	24.16	17.03	1.88	23.00	16.60	2.09	21.82	16.16	2.33	20.53	15.69	2.59	19.09	15.16	2.88
	63 (17.2)††	23.76	16.95	1.68	22.72	16.53	1.87	21.60	16.08	2.09	20.46	15.63	2.33	19.22	15.14	2.59	17.86	14.60	2.88
	62 (16.7)	23.47	20.99	1.68	22.49	20.52	1.87	21.52	21.52	2.09	20.58	20.58	2.33	19.54	19.54	2.59	18.38	18.38	2.88
	57 (13.9)	23.30	23.30	1.68	22.44	22.44	1.87	21.53	21.53	2.09	20.58	20.58	2.33	19.54	19.54	2.59	18.38	18.38	2.88
900	72 (22.2)	27.79	14.53	1.73	26.41	14.07	1.92	25.10	13.63	2.13	23.83	13.21	2.37	22.42	12.76	2.63	20.83	12.24	2.91
	67 (19.4)	25.51	18.45	1.72	24.38	18.03	1.91	23.21	17.59	2.13	22.00	17.15	2.37	20.68	16.66	2.63	19.22	16.12	2.91
	63 (17.2)††	24.03	17.89	1.72	22.96	17.47	1.91	21.82	17.01	2.12	20.66	16.55	2.36	19.39	16.05	2.63	18.01	15.49	2.92
	62 (16.7)	23.97	23.97	1.72	23.07	23.07	1.91	22.11	22.11	2.12	21.12	21.12	2.36	20.03	20.03	2.63	18.82	18.82	2.91
	57 (13.9)	23.96	23.96	1.72	23.07	23.07	1.91	22.11	22.11	2.12	21.12	21.12	2.36	20.04	20.04	2.63	18.82	18.82	2.91

COOLING INDOOR MODEL	CAPACITY	POWER	FURNACE MODEL
*CAP**2414A**	1.00	1.00	
CAP**2417A**	1.00	1.00	
CAP**3014A**	1.01	1.01	
CAP**3017A**	1.01	1.01	
CNPF*2418A**	1.00	1.00	
CNPH*2417A**	1.00	1.00	
CNPH*3017A**	1.01	1.01	
CNPV*2414A**	1.00	1.00	
CNPV*2417A**	1.00	1.00	
CNPV*3014A**	1.01	1.01	
CNPV*3017A**	1.01	1.01	
CSPH*2412A**	1.00	1.00	
CSPH*3012A**	1.01	1.01	
FE4AN(B,F)003	1.02	0.92	
FE4ANF002	0.98	0.90	
FF1ENP024	0.98	0.98	
FF1ENP030	1.00	1.01	
FV4BN(B,F)003	1.02	0.92	
FV4BNF002	0.98	0.90	
FX4CNF024	1.01	0.95	
FX4CNF030	1.02	0.93	
FY4ANF024	1.00	1.00	
FY4ANF030	1.01	1.01	
CAP**2414A**	0.99	0.91	58CV(A,X)070–12
CAP**3014A**	1.00	0.92	58CV(A,X)070–12
CNPH*2417A**	0.99	0.93	58CV(A,X)070–12
CNPH*3017A**	1.00	0.92	58CV(A,X)070–12
CNPV*2414A**	0.99	0.93	58CV(A,X)070–12
CNPV*3014A**	1.00	0.92	58CV(A,X)070–12
CSPH*2412A**	1.00	0.92	58CV(A,X)070–12
CSPH*3012A**	1.00	0.92	58CV(A,X)070–12
CAP**2417A**	1.00	0.90	58CV(A,X)090–16
CAP**3017A**	1.01	0.91	58CV(A,X)090–16
CNPH*2417A**	0.99	0.91	58CV(A,X)090–16

COOLING INDOOR MODEL	CAPACITY	POWER	FURNACE MODEL
CNPH*3017A**	1.01	0.91	58CV(A,X)090–16
CNPV*2417A**	0.99	0.91	58CV(A,X)090–16
CNPV*3017A**	1.01	0.91	58CV(A,X)090–16
CSPH*2412A**	1.01	0.92	58CV(A,X)090–16
CSPH*3012A**	1.01	0.91	58CV(A,X)090–16
CNPH*2417A**	0.99	0.93	58CV(A,X)110–20
CNPH*3017A**	1.01	0.91	58CV(A,X)110–20
CSPH*2412A**	1.01	0.92	58CV(A,X)110–20
CSPH*3012A**	1.01	0.91	58CV(A,X)110–20
CNPH*2417A**	0.99	0.91	58CV(A,X)135–22
CNPH*3017A**	1.01	0.91	58CV(A,X)135–22
CSPH*2412A**	1.01	0.92	58CV(A,X)135–22
CSPH*3012A**	1.01	0.91	58CV(A,X)135–22
CNPH*2417A**	0.99	0.91	58CV(A,X)155–22
CNPH*3017A**	1.01	0.91	58CV(A,X)155–22
CSPH*2412A**	1.01	0.92	58CV(A,X)155–22
CSPH*3012A**	1.01	0.91	58CV(A,X)155–22
CAP**2417A**	1.02	0.92	58MEB040–12
CAP**3017A**	1.03	0.93	58MEB040–12
CNPH*2417A**	1.01	0.92	58MEB040–12
CNPH*3017A**	1.03	0.93	58MEB040–12
CNPV*2417A**	1.01	0.92	58MEB040–12
CNPV*3017A**	1.03	0.93	58MEB040–12
CSPH*2412A**	1.02	0.92	58MEB040–12
CSPH*3012A**	1.03	0.93	58MEB040–12
CAP**2417A**	1.02	0.92	58MEB060–12
CAP**3017A**	1.03	0.93	58MEB060–12
CNPH*2417A**	1.01	0.92	58MEB060–12
CNPH*3017A**	1.03	0.93	58MEB060–12
CNPV*2417A**	1.01	0.92	58MEB060–12
CNPV*3017A**	1.03	0.93	58MEB060–12
CSPH*2412A**	1.02	0.92	58MEB060–12
CSPH*3012A**	1.03	0.93	58MEB060–12
CAP**2417A**	1.01	0.91	58MEB080–12

COOLING INDOOR MODEL	CAPACITY	POWER	FURNACE MODEL
CAP**3017A**	1.03	0.93	58MEB080–12
CNPH*2417A**	1.01	0.92	58MEB080–12
CNPH*3017A**	1.03	0.93	58MEB080–12
CNPV*2417A**	1.01	0.92	58MEB080–12
CNPV*3017A**	1.03	0.93	58MEB080–12
CSPH*2412A**	1.02	0.92	58MEB080–12
CSPH*3012A**	1.03	0.93	58MEB080–12
CAP**2417A**	1.01	0.91	58MV(B,C)060–14
CAP**3017A**	1.02	0.92	58MV(B,C)060–14
CNPH*2417A**	1.01	0.92	58MV(B,C)060–14
CNPH*3017A**	1.02	0.92	58MV(B,C)060–14
CNPV*2417A**	1.01	0.92	58MV(B,C)060–14
CNPV*3017A**	1.02	0.92	58MV(B,C)060–14
CSPH*2412A**	1.02	0.93	58MV(B,C)060–14
CSPH*3012A**	1.03	0.93	58MV(B,C)060–14
CNPH*2417A**	0.99	0.91	58MV(B,C)080–14
CNPH*3017A**	1.01	0.91	58MV(B,C)080–14
CSPH*2412A**	1.00	0.92	58MV(B,C)080–14
CSPH*3012A**	1.01	0.91	58MV(B,C)080–14
CNPH*2417A**	0.98	0.90	58MV(B,C)080–20
CNPH*3017A**	1.00	0.90	58MV(B,C)080–20
CSPH*2412A**	1.00	0.92	58MV(B,C)080–20
CSPH*3012A**	1.00	0.90	58MV(B,C)080–20
CNPH*2417A**	0.99	0.91	58MV(B,C)100–20
CNPH*3017A**	1.01	0.91	58MV(B,C)100–20
CSPH*2412A**	1.01	0.92	58MV(B,C)100–20
CSPH*3012A**	1.01	0.91	58MV(B,C)100–20
CNPH*2417A**	1.00	0.92	58MV(B,C)120–20
CNPH*3017A**	1.01	0.91	58MV(B,C)120–20
CSPH*2412A**	1.01	0.92	58MV(B,C)120–20
CSPH*3012A**	1.02	0.92	58MV(B,C)120–20
CNPH*2417A**	0.99	0.93	58MVB040–14
CNPH*3017A**	1.01	0.91	58MVB040–14

DETAILED COOLING CAPACITIES# CONTINUED

24ABB324A31 Outdoor Section With CAP2414A** Indoor Section**

COOLING INDOOR MODEL	CAPACITY	POWER	FURNACE MODEL
CSPH*2412A**	1.01	0.92	58MVB040−14
CSPH*3012A**	1.01	0.91	58MVB040−14
CAP**2414A**	1.00	0.94	58PH*045−08
CAP**3014A**	1.02	0.93	58PH*045−08
CNPH*2417A**	1.00	0.94	58PH*045−08
CNPH*3017A**	1.02	0.93	58PH*045−08
CNPV*2414A**	1.00	0.94	58PH*045−08
CNPV*3014A**	1.01	0.92	58PH*045−08
CSPH*2412A**	1.01	0.92	58PH*045−08
CSPH*3012A**	1.02	0.93	58PH*045−08

See notes on page 26

DETAILED COOLING CAPACITIES# CONTINUED

EVAPORATOR AIR		CONDENSER ENTERING AIR TEMPERATURES °F (°C)																	
		75 (23.9)			85 (29.4)			95 (35)			105 (40.6)			115 (46.1)			125 (51.7)		
CFM	EWB °F (°C)	Capacity MBtuh		Total Sys. KW**	Capacity MBtuh		Total Sys. KW**	Capacity MBtuh		Total Sys. KW**	Capacity MBtuh		Total Sys. KW**	Capacity MBtuh		Total Sys. KW**	Capacity MBtuh		Total Sys. KW**
		Total	Sens‡		Total	Sens‡		Total	Sens‡		Total	Sens‡		Total	Sens‡		Total	Sens‡	
24ABB330A31 Outdoor Section With CAP**3014A** Indoor Section																			
875	72 (22.2)	32.18	16.57	2.04	30.84	16.09	2.25	29.42	15.59	2.49	27.93	15.07	2.76	26.28	14.50	3.05	24.43	13.86	3.36
	67 (19.4)	29.70	20.70	2.03	28.44	20.20	2.25	27.08	19.68	2.49	25.67	19.13	2.75	24.11	18.54	3.04	22.39	17.88	3.35
	63 (17.2)††	27.91	20.13	2.03	26.69	19.62	2.25	25.39	19.07	2.49	24.02	18.50	2.75	22.52	17.88	3.04	20.88	17.21	3.35
	62 (16.7)	27.50	24.80	2.03	26.34	24.26	2.25	25.11	23.67	2.49	23.94	23.94	2.75	22.71	22.71	3.04	21.35	21.35	3.35
	57 (13.9)	27.10	27.10	2.03	26.12	26.12	2.25	25.05	25.05	2.49	23.94	23.94	2.75	22.71	22.71	3.04	21.35	21.35	3.35
1000	72 (22.2)	32.58	17.38	2.08	31.18	16.89	2.30	29.72	16.38	2.54	28.19	15.86	2.81	26.50	15.29	3.09	24.59	14.65	3.40
	67 (19.4)	30.08	22.03	2.08	28.79	21.53	2.30	27.40	21.00	2.54	25.96	20.45	2.80	24.36	19.85	3.09	22.60	19.17	3.40
	63 (17.2)††	28.31	21.38	2.08	27.06	20.87	2.30	25.72	20.31	2.53	24.32	19.74	2.80	22.78	19.11	3.09	21.11	18.42	3.40
	62 (16.7)	28.07	27.82	2.08	27.00	27.00	2.29	25.89	25.89	2.53	24.72	24.72	2.80	23.42	23.42	3.09	21.98	21.98	3.40
	57 (13.9)	28.04	28.04	2.08	27.01	27.01	2.29	25.89	25.89	2.53	24.72	24.72	2.80	23.42	23.42	3.09	21.98	21.98	3.40
1125	72 (22.2)	32.83	18.14	2.13	31.40	17.65	2.35	29.91	17.14	2.59	28.35	16.62	2.85	26.63	16.04	3.14	24.68	15.40	3.45
	67 (19.4)	30.36	23.30	2.13	29.03	22.80	2.34	27.62	22.26	2.58	26.15	21.70	2.85	24.54	21.08	3.14	22.76	20.38	3.45
	63 (17.2)††	28.59	22.57	2.12	27.32	22.05	2.34	25.95	21.49	2.58	24.53	20.90	2.85	22.98	20.26	3.13	21.29	19.53	3.44
	62 (16.7)	28.79	28.79	2.12	27.71	27.71	2.34	26.54	26.54	2.58	25.33	25.33	2.85	23.98	23.98	3.13	22.47	22.47	3.44
	57 (13.9)	28.79	28.79	2.12	27.71	27.71	2.34	26.55	26.55	2.58	25.33	25.33	2.85	23.98	23.98	3.13	22.47	22.47	3.44

COOLING INDOOR MODEL	CAPACITY	POWER	FURNACE MODEL
*CAP**3014A**	1.00	1.00	
CAP**3017A**	1.00	1.00	
CAP**3614A**	1.00	1.00	
CAP**3617A**	1.01	1.01	
CAP**3621A**	1.01	1.01	
CNPF*3618A**	1.00	1.00	
CNPH*3017A**	1.00	1.00	
CNPH*3617A**	1.00	1.00	
CNPV*3014A**	1.00	1.00	
CNPV*3017A**	1.00	1.00	
CNPV*3617A**	1.00	1.00	
CNPV*3621A**	1.00	1.00	
CSPH*3012A**	1.00	1.00	
CSPH*3612A**	1.00	1.00	
FE4AN(B,F)003	1.01	0.89	
FE4AN(B,F)005	1.04	0.92	
FE4ANF002	1.01	0.93	
FF1ENP036	1.00	0.99	
FV4BN(B,F)003	1.01	0.89	
FV4BN(B,F)005	1.04	0.92	
FV4BNF002	0.98	0.90	
FX4CN(B,F)036	1.01	0.95	
FX4CNF030	1.01	0.93	
FY4ANF030	0.99	0.98	
CAP**3014A**	0.99	0.92	58CV(A,X)070–12
CAP**3614A**	1.00	0.92	58CV(A,X)070–12
CNPH*3017A**	0.99	0.92	58CV(A,X)070–12
CNPH*3617A**	1.00	0.92	58CV(A,X)070–12
CNPV*3014A**	0.99	0.92	58CV(A,X)070–12
CSPH*3012A**	0.99	0.92	58CV(A,X)070–12
CSPH*3612A**	1.01	0.91	58CV(A,X)070–12
CAP**3017A**	1.00	0.90	58CV(A,X)090–16
CAP**3617A**	1.00	0.90	58CV(A,X)090–16
CNPH*3017A**	1.00	0.92	58CV(A,X)090–16

COOLING INDOOR MODEL	CAPACITY	POWER	FURNACE MODEL
CNPH*3617A**	1.00	0.92	58CV(A,X)090–16
CNPV*3017A**	1.00	0.92	58CV(A,X)090–16
CNPV*3617A**	1.00	0.92	58CV(A,X)090–16
CSPH*3012A**	1.00	0.92	58CV(A,X)090–16
CSPH*3612A**	1.01	0.91	58CV(A,X)090–16
CAP**3621A**	1.01	0.91	58CV(A,X)110–20
CNPH*3017A**	1.00	0.92	58CV(A,X)110–20
CNPH*3617A**	1.00	0.92	58CV(A,X)110–20
CNPV*3621A**	1.00	0.92	58CV(A,X)110–20
CSPH*3012A**	1.01	0.93	58CV(A,X)110–20
CSPH*3612A**	1.01	0.91	58CV(A,X)110–20
CNPH*3017A**	1.00	0.90	58CV(A,X)135–22
CNPH*3617A**	1.00	0.90	58CV(A,X)135–22
CSPH*3012A**	1.01	0.93	58CV(A,X)135–22
CSPH*3612A**	1.01	0.91	58CV(A,X)135–22
CNPH*3017A**	1.00	0.90	58CV(A,X)155–22
CNPH*3617A**	1.00	0.90	58CV(A,X)155–22
CSPH*3012A**	1.01	0.91	58CV(A,X)155–22
CSPH*3612A**	1.01	0.91	58CV(A,X)155–22
CAP**3017A**	1.01	0.91	58MEB040–12
CAP**3617A**	1.01	0.91	58MEB040–12
CNPH*3017A**	1.01	0.91	58MEB040–12
CNPH*3617A**	0.99	0.89	58MEB040–12
CNPV*3017A**	1.01	0.91	58MEB040–12
CNPV*3617A**	0.99	0.89	58MEB040–12
CSPH*3012A**	1.01	0.91	58MEB040–12
CSPH*3612A**	1.00	0.90	58MEB040–12
CAP**3017A**	1.01	0.94	58MEB060–12
CAP**3617A**	1.01	0.91	58MEB060–12
CNPH*3017A**	1.01	0.94	58MEB060–12
CNPH*3617A**	0.99	0.89	58MEB060–12
CNPV*3017A**	1.01	0.94	58MEB060–12
CNPV*3617A**	0.99	0.89	58MEB060–12
CSPH*3012A**	1.01	0.94	58MEB060–12

COOLING INDOOR MODEL	CAPACITY	POWER	FURNACE MODEL
CSPH*3612A**	1.00	0.90	58MEB060–12
CAP**3017A**	1.01	0.91	58MEB080–12
CAP**3617A**	1.01	0.91	58MEB080–12
CNPH*3017A**	1.01	0.91	58MEB080–12
CNPH*3617A**	0.99	0.89	58MEB080–12
CNPV*3017A**	1.01	0.91	58MEB080–12
CNPV*3617A**	0.99	0.89	58MEB080–12
CSPH*3012A**	1.01	0.93	58MEB080–12
CSPH*3612A**	1.00	0.90	58MEB080–12
CAP**3017A**	1.01	0.94	58MEB080–16
CAP**3617A**	1.02	0.94	58MEB080–16
CNPH*3017A**	1.01	0.94	58MEB080–16
CNPH*3617A**	1.01	0.94	58MEB080–16
CNPV*3017A**	1.01	0.94	58MEB080–16
CNPV*3617A**	1.01	0.94	58MEB080–16
CSPH*3012A**	1.01	0.94	58MEB080–16
CSPH*3612A**	1.01	0.91	58MEB080–16
CAP**3017A**	1.00	0.92	58MV(B,C)060–14
CAP**3617A**	1.01	0.91	58MV(B,C)060–14
CNPH*3017A**	1.01	0.93	58MV(B,C)060–14
CNPH*3617A**	1.01	0.93	58MV(B,C)060–14
CNPV*3017A**	1.01	0.93	58MV(B,C)060–14
CNPV*3617A**	1.01	0.93	58MV(B,C)060–14
CSPH*3012A**	1.01	0.93	58MV(B,C)060–14
CSPH*3612A**	1.02	0.92	58MV(B,C)060–14
CAP**3621A**	1.00	0.92	58MV(B,C)080–14
CNPH*3017A**	0.99	0.92	58MV(B,C)080–14
CNPH*3617A**	0.99	0.92	58MV(B,C)080–14
CNPV*3621A**	0.99	0.92	58MV(B,C)080–14
CSPH*3012A**	1.00	0.92	58MV(B,C)080–14
CSPH*3612A**	1.01	0.91	58MV(B,C)080–14
CAP**3621A**	1.00	0.90	58MV(B,C)080–20
CNPH*3017A**	1.00	0.92	58MV(B,C)080–20

DETAILED COOLING CAPACITIES# CONTINUED

24ABB330A31 Outdoor Section With CAP3014A** Indoor Section**

COOLING INDOOR MODEL	CAPACITY	POWER	FURNACE MODEL
CNPH*3617A**	1.00	0.92	58MV(B,C)080 – 20
CNPV*3621A**	1.00	0.92	58MV(B,C)080 – 20
CSPH*3012A**	1.00	0.92	58MV(B,C)080 – 20
CSPH*3612A**	1.01	0.91	58MV(B,C)080 – 20
CAP**3621A**	0.99	0.92	58MV(B,C)100 – 20
CNPH*3017A**	0.99	0.92	58MV(B,C)100 – 20
CNPH*3617A**	0.99	0.92	58MV(B,C)100 – 20
CNPV*3621A**	0.99	0.92	58MV(B,C)100 – 20
CSPH*3012A**	0.99	0.92	58MV(B,C)100 – 20
CSPH*3612A**	1.01	0.91	58MV(B,C)100 – 20
CNPH*3017A**	1.00	0.90	58MV(B,C)120 – 20
CNPH*3617A**	1.00	0.90	58MV(B,C)120 – 20
CSPH*3012A**	1.01	0.93	58MV(B,C)120 – 20
CSPH*3612A**	1.02	0.92	58MV(B,C)120 – 20
CNPH*3017A**	1.00	0.92	58MVB040 – 14
CNPH*3617A**	1.00	0.92	58MVB040 – 14
CSPH*3012A**	1.00	0.92	58MVB040 – 14
CSPH*3612A**	1.01	0.91	58MVB040 – 14
CAP**3017A**	1.00	0.92	58PH*070 – 16
CAP**3617A**	1.01	0.93	58PH*070 – 16
CNPH*3017A**	1.00	0.94	58PH*070 – 16
CNPH*3617A**	1.00	0.94	58PH*070 – 16
CNPV*3017A**	1.00	0.94	58PH*070 – 16
CNPV*3617A**	1.00	0.94	58PH*070 – 16
CSPH*3012A**	1.01	0.95	58PH*070 – 16
CSPH*3612A**	1.01	0.94	58PH*070 – 16
CAP**3621A**	1.01	0.91	58PH*090 – 16
CNPH*3017A**	1.01	0.93	58PH*090 – 16
CNPH*3617A**	1.01	0.93	58PH*090 – 16
CNPV*3621A**	1.01	0.93	58PH*090 – 16
CSPH*3012A**	1.01	0.93	58PH*090 – 16
CSPH*3612A**	1.01	0.91	58PH*090 – 16

See notes on page 26

DETAILED COOLING CAPACITIES# CONTINUED

EVAPORATOR AIR		CONDENSER ENTERING AIR TEMPERATURES °F (°C)																	
		75 (23.9)			85 (29.4)			95 (35)			105 (40.6)			115 (46.1)			125 (51.7)		
CFM	EWB °F (°C)	Capacity MBtuh		Total Sys. KW**	Capacity MBtuh		Total Sys. KW**	Capacity MBtuh		Total Sys. KW**	Capacity MBtuh		Total Sys. KW**	Capacity MBtuh		Total Sys. KW**	Capacity MBtuh		Total Sys. KW**
		Total	Sens‡		Total	Sens‡		Total	Sens‡		Total	Sens‡		Total	Sens‡		Total	Sens‡	
24ABB336A31 Outdoor Section With CAP*3617A Indoor Section																			
1050	72 (22.2)	40.22	21.00	2.54	38.50	20.34	2.79	36.66	19.65	3.07	34.69	18.93	3.39	32.56	18.15	3.76	30.22	17.30	4.20
	67 (19.4)	36.61	25.73	2.51	35.00	25.05	2.76	33.29	24.35	3.04	31.46	23.60	3.36	29.49	22.81	3.74	27.34	21.95	4.18
	63 (17.2)††	34.02	24.88	2.49	32.50	24.20	2.74	30.89	23.49	3.02	29.17	22.73	3.35	27.32	21.94	3.73	25.29	21.07	4.18
	62 (16.7)	33.42	30.44	2.49	31.97	29.75	2.74	30.45	29.01	3.02	28.86	28.20	3.35	27.29	27.29	3.73	25.64	25.64	4.18
	57 (13.9)	32.55	32.55	2.48	31.38	31.38	2.73	30.12	30.12	3.02	28.77	28.77	3.35	27.29	27.29	3.73	25.65	25.65	4.18
1200	72 (22.2)	40.90	21.97	2.60	39.11	21.31	2.85	37.20	20.61	3.13	35.17	19.88	3.45	32.96	19.09	3.82	30.54	18.23	4.25
	67 (19.4)	37.25	27.30	2.57	35.57	26.61	2.82	33.80	25.90	3.10	31.91	25.15	3.42	29.88	24.35	3.80	27.67	23.48	4.24
	63 (17.2)††	34.63	26.36	2.55	33.04	25.66	2.80	31.38	24.94	3.08	29.60	24.18	3.41	27.69	23.37	3.79	25.61	22.48	4.24
	62 (16.7)	34.19	32.60	2.55	32.73	31.85	2.80	31.24	31.24	3.08	29.83	29.83	3.41	28.26	28.26	3.79	26.52	26.52	4.24
	57 (13.9)	33.87	33.87	2.55	32.61	32.61	2.80	31.27	31.27	3.08	29.83	29.83	3.41	28.26	28.26	3.79	26.52	26.52	4.24
1350	72 (22.2)	41.40	22.89	2.66	39.55	22.22	2.91	37.60	21.52	3.19	35.50	20.77	3.51	33.24	19.97	3.88	30.75	19.10	4.31
	67 (19.4)	37.72	28.79	2.63	36.00	28.11	2.88	34.19	27.39	3.16	32.26	26.63	3.48	30.19	25.81	3.86	27.93	24.92	4.30
	63 (17.2)††	35.09	27.77	2.61	33.47	27.07	2.86	31.76	26.34	3.14	29.94	25.57	3.47	27.99	24.73	3.85	25.88	23.82	4.29
	62 (16.7)	34.90	34.90	2.61	33.63	33.63	2.86	32.22	32.22	3.15	30.70	30.70	3.47	29.05	29.05	3.85	27.22	27.22	4.30
	57 (13.9)	34.96	34.96	2.61	33.64	33.64	2.86	32.23	32.23	3.15	30.70	30.70	3.47	29.05	29.05	3.85	27.22	27.22	4.29

Cooling Indoor Model	Capacity	Power	Furnace Model
*CAP**3617A**	1.00	1.00	
CAP**3614A**	0.97	0.97	
CAP**3621A**	1.00	1.00	
CAP**4221A**	1.01	1.01	
CAP**4224A**	1.00	1.00	
CNPF*3618A**	1.00	1.00	
CNPH*3617A**	1.00	1.00	
CNPH*4221A**	1.01	1.01	
CNPV*3617A**	1.00	1.00	
CNPV*3621A**	1.00	1.00	
CNPV*4217A**	1.00	0.99	
CNPV*4221A**	1.01	1.01	
CSPH*3612A**	1.00	0.99	
CSPH*4212A**	1.01	1.00	
FE4AN(B,F)003	0.99	0.90	
FE4AN(B,F)005	1.03	0.94	
FE4ANB006	1.04	0.95	
FE4ANF002	0.99	0.94	
FE5ANB004	1.04	0.94	
FF1ENP036	0.99	0.99	
FV4BN(B,F)003	0.99	0.90	
FV4BN(B,F)005	1.03	0.94	
FV4BNB006	1.04	0.95	
FV4BNF002	0.99	0.94	
FX4CN(B,F)036	1.01	0.94	
FX4CN(B,F)042	1.03	0.96	
FY4ANF036	0.98	0.98	
FY4ANF042	1.01	1.00	
CAP**3614A**	0.96	0.91	58CV(A,X)070–12
CNPH*3617A**	0.98	0.93	58CV(A,X)070–12
CNPH*4221A**	0.99	0.94	58CV(A,X)070–12
CSPH*3612A**	0.99	0.93	58CV(A,X)070–12
CSPH*4212A**	0.99	0.93	58CV(A,X)070–12
CAP**3617A**	0.99	0.92	58CV(A,X)090–16

Cooling Indoor Model	Capacity	Power	Furnace Model
CNPH*3617A**	0.98	0.93	58CV(A,X)090–16
CNPH*4221A**	0.99	0.93	58CV(A,X)090–16
CNPV*3617A**	0.98	0.93	58CV(A,X)090–16
CNPV*4217A**	1.00	0.93	58CV(A,X)090–16
CSPH*3612A**	0.99	0.90	58CV(A,X)090–16
CSPH*4212A**	0.99	0.90	58CV(A,X)090–16
CAP**3621A**	0.99	0.92	58CV(A,X)110–20
CAP**4221A**	0.99	0.90	58CV(A,X)110–20
CNPH*3617A**	0.99	0.94	58CV(A,X)110–20
CNPH*4221A**	1.00	0.93	58CV(A,X)110–20
CNPV*3621A**	0.99	0.94	58CV(A,X)110–20
CNPV*4221A**	1.00	0.93	58CV(A,X)110–20
CSPH*3612A**	0.99	0.90	58CV(A,X)110–20
CSPH*4212A**	1.00	0.91	58CV(A,X)110–20
CAP**4224A**	0.99	0.90	58CV(A,X)135–22
CNPH*3617A**	0.99	0.92	58CV(A,X)135–22
CNPH*4221A**	0.99	0.90	58CV(A,X)135–22
CSPH*3612A**	0.99	0.90	58CV(A,X)135–22
CSPH*4212A**	0.99	0.90	58CV(A,X)135–22
CAP**4224A**	1.00	0.91	58CV(A,X)155–22
CNPH*3617A**	0.99	0.92	58CV(A,X)155–22
CNPH*4221A**	1.00	0.91	58CV(A,X)155–22
CSPH*3612A**	0.99	0.90	58CV(A,X)155–22
CSPH*4212A**	1.00	0.91	58CV(A,X)155–22
CAP**3617A**	0.99	0.93	58MEB040–12
CNPH*3617A**	0.99	0.92	58MEB040–12
CNPH*4221A**	1.00	0.93	58MEB040–12
CNPV*3617A**	0.99	0.92	58MEB040–12
CNPV*4217A**	1.00	0.93	58MEB040–12
CSPH*3612A**	1.00	0.93	58MEB040–12
CSPH*4212A**	1.00	0.93	58MEB040–12
CAP**3617A**	0.99	0.93	58MEB060–12
CNPH*3617A**	0.99	0.92	58MEB060–12
CNPH*4221A**	1.00	0.93	58MEB060–12

Cooling Indoor Model	Capacity	Power	Furnace Model
CNPV*3617A**	0.99	0.92	58MEB060–12
CNPV*4217A**	1.00	0.93	58MEB060–12
CSPH*3612A**	1.00	0.93	58MEB060–12
CSPH*4212A**	1.00	0.93	58MEB060–12
CAP**3617A**	0.99	0.93	58MEB080–12
CNPH*3617A**	0.99	0.92	58MEB080–12
CNPH*4221A**	1.00	0.93	58MEB080–12
CNPV*3617A**	0.99	0.92	58MEB080–12
CNPV*4217A**	1.00	0.93	58MEB080–12
CSPH*3612A**	1.00	0.93	58MEB080–12
CSPH*4212A**	1.00	0.93	58MEB080–12
CAP**3617A**	0.99	0.93	58MEB080–16
CNPH*3617A**	0.99	0.92	58MEB080–16
CNPH*4221A**	1.00	0.93	58MEB080–16
CNPV*3617A**	0.99	0.92	58MEB080–16
CNPV*4217A**	1.00	0.93	58MEB080–16
CSPH*3612A**	1.00	0.93	58MEB080–16
CSPH*4212A**	1.00	0.93	58MEB080–16
CAP**3621A**	0.99	0.90	58MEB100–20
CAP**4221A**	1.00	0.91	58MEB100–20
CNPH*3617A**	0.98	0.92	58MEB100–20
CNPH*4221A**	1.00	0.93	58MEB100–20
CNPV*3621A**	0.99	0.92	58MEB100–20
CNPV*4221A**	1.00	0.93	58MEB100–20
CSPH*3612A**	1.00	0.93	58MEB100–20
CSPH*4212A**	1.00	0.93	58MEB100–20
CAP**3617A**	0.99	0.94	58MV(B,C)060–14
CNPH*3617A**	0.99	0.94	58MV(B,C)060–14
CNPH*4221A**	1.00	0.93	58MV(B,C)060–14
CNPV*3617A**	0.99	0.94	58MV(B,C)060–14
CNPV*4217A**	1.00	0.93	58MV(B,C)060–14
CSPH*3612A**	0.99	0.90	58MV(B,C)060–14
CSPH*4212A**	1.00	0.91	58MV(B,C)060–14

DETAILED COOLING CAPACITIES# CONTINUED

24ABB336A31 Outdoor Section With CAP*3617A Indoor Section

Cooling Indoor Model	Capacity	Power	Furnace Model
CAP**3621A**	0.99	0.94	58MV(B,C)080 – 14
CAP**4221A**	0.99	0.94	58MV(B,C)080 – 14
CNPH*3617A**	0.98	0.93	58MV(B,C)080 – 14
CNPH*4221A**	0.99	0.94	58MV(B,C)080 – 14
CNPV*3621A**	0.98	0.93	58MV(B,C)080 – 14
CNPV*4221A**	0.99	0.94	58MV(B,C)080 – 14
CSPH*3612A**	0.99	0.92	58MV(B,C)080 – 14
CSPH*4212A**	0.99	0.93	58MV(B,C)080 – 14
CAP**3621A**	0.99	0.92	58MV(B,C)080 – 20
CAP**4221A**	0.99	0.93	58MV(B,C)080 – 20
CNPH*3617A**	0.98	0.93	58MV(B,C)080 – 20
CNPH*4221A**	0.99	0.93	58MV(B,C)080 – 20
CNPV*3621A**	0.98	0.93	58MV(B,C)080 – 20
CNPV*4221A**	0.99	0.93	58MV(B,C)080 – 20
CSPH*3612A**	0.99	0.93	58MV(B,C)080 – 20
CSPH*4212A**	0.99	0.90	58MV(B,C)080 – 20
CAP**3621A**	0.99	0.93	58MV(B,C)100 – 20
CAP**4221A**	1.00	0.93	58MV(B,C)100 – 20
CNPH*3617A**	0.99	0.94	58MV(B,C)100 – 20
CNPH*4221A**	1.00	0.93	58MV(B,C)100 – 20
CNPV*3621A**	0.99	0.94	58MV(B,C)100 – 20
CNPV*4221A**	1.00	0.93	58MV(B,C)100 – 20
CSPH*3612A**	0.99	0.90	58MV(B,C)100 – 20
CSPH*4212A**	1.00	0.91	58MV(B,C)100 – 20
CAP**4224A**	0.99	0.90	58MV(B,C)120 – 20
CNPH*3617A**	0.99	0.94	58MV(B,C)120 – 20
CNPH*4221A**	0.99	0.93	58MV(B,C)120 – 20
CSPH*3612A**	0.99	0.90	58MV(B,C)120 – 20
CSPH*4212A**	0.99	0.90	58MV(B,C)120 – 20
CAP**4224A**	0.99	0.92	58MVB040 – 14
CNPH*3617A**	0.98	0.93	58MVB040 – 14
CNPH*4221A**	0.99	0.94	58MVB040 – 14
CSPH*3612A**	0.99	0.94	58MVB040 – 14
CSPH*4212A**	0.99	0.93	58MVB040 – 14
CAP**3617A**	0.99	0.96	58PH*070 – 16
CAP**4817A**	1.02	0.95	58PH*070 – 16
CNPH*3617A**	0.98	0.97	58PH*070 – 16
CNPH*4221A**	0.99	0.97	58PH*070 – 16
CNPV*3617A**	0.98	0.96	58PH*070 – 16
CNPV*4217A**	1.00	0.93	58PH*070 – 16
CSPH*3612A**	1.01	0.95	58PH*070 – 16
CSPH*4212A**	1.02	0.95	58PH*070 – 16
CAP**3621A**	1.00	0.91	58PH*090 – 16
CAP**4221A**	1.01	0.91	58PH*090 – 16
CNPH*3617A**	0.99	0.92	58PH*090 – 16
CNPH*4221A**	1.01	0.91	58PH*090 – 16
CNPV*3621A**	0.99	0.92	58PH*090 – 16
CNPV*4221A**	1.01	0.91	58PH*090 – 16
CSPH*3612A**	1.02	0.92	58PH*090 – 16
CSPH*4212A**	1.02	0.93	58PH*090 – 16
CAP**3621A**	1.01	0.91	58PH*110 – 20
CAP**4221A**	1.01	0.92	58PH*110 – 20
CNPH*3617A**	0.99	0.93	58PH*110 – 20
CNPH*4221A**	1.01	0.91	58PH*110 – 20
CNPV*3621A**	0.99	0.93	58PH*110 – 20
CNPV*4221A**	1.01	0.91	58PH*110 – 20
CSPH*3612A**	1.02	0.92	58PH*110 – 20
CSPH*4212A**	1.03	0.94	58PH*110 – 20

See notes on page 26

DETAILED COOLING CAPACITIES# CONTINUED

EVAPORATOR AIR		CONDENSER ENTERING AIR TEMPERATURES °F (°C)																	
		75 (23.9)			85 (29.4)			95 (35)			105 (40.6)			115 (46.1)			125 (51.7)		
CFM	EWB °F (°C)	Capacity MBtuh		Total Sys. KW**	Capacity MBtuh		Total Sys. KW**	Capacity MBtuh		Total Sys. KW**	Capacity MBtuh		Total Sys. KW**	Capacity MBtuh		Total Sys. KW**	Capacity MBtuh		Total Sys. KW**
		Total	Sens‡		Total	Sens‡		Total	Sens‡		Total	Sens‡		Total	Sens‡		Total	Sens‡	
24ABB342A30 Outdoor Section With 42 Indoor Section																			
1225	72 (22.2)	48.49	25.49	3.39	46.39	24.69	3.73	44.18	23.85	4.11	41.83	22.97	4.52	39.28	22.03	4.98	36.45	21.00	5.47
	67 (19.4)	44.47	31.36	3.33	42.52	30.54	3.67	40.46	29.67	4.05	38.28	28.77	4.47	35.93	27.82	4.92	33.34	26.78	5.42
	63 (17.2)††	41.53	30.43	3.29	39.69	29.59	3.63	37.74	28.72	4.01	35.68	27.80	4.43	33.47	26.84	4.88	31.05	25.79	5.38
	62 (16.7)	40.83	37.19	3.28	39.07	36.35	3.63	37.22	35.45	4.00	35.29	34.48	4.42	33.32	33.32	4.88	31.36	31.36	5.38
	57 (13.9)	39.73	39.73	3.27	38.29	38.29	3.62	36.76	36.76	4.00	35.12	35.12	4.42	33.34	33.34	4.88	31.36	31.36	5.38
1400	72 (22.2)	49.21	26.62	3.47	47.02	25.80	3.81	44.73	24.95	4.19	42.30	24.06	4.61	39.67	23.11	5.06	36.75	22.07	5.55
	67 (19.4)	45.16	33.20	3.42	43.14	32.37	3.76	41.00	31.49	4.13	38.75	30.59	4.55	36.34	29.63	5.01	33.67	28.57	5.50
	63 (17.2)††	42.22	32.16	3.38	40.31	31.31	3.72	38.28	30.42	4.09	36.17	29.51	4.51	33.89	28.53	4.97	31.40	27.47	5.46
	62 (16.7)	41.69	39.75	3.37	39.91	38.85	3.71	38.02	38.02	4.09	36.34	36.34	4.51	34.45	34.45	4.98	32.33	32.33	5.48
	57 (13.9)	41.25	41.25	3.37	39.72	39.72	3.71	38.08	38.08	4.09	36.34	36.34	4.51	34.45	34.45	4.98	32.33	32.33	5.48
1575	72 (22.2)	49.75	27.70	3.56	47.50	26.88	3.90	45.14	26.02	4.27	42.64	25.12	4.69	39.94	24.16	5.14	36.95	23.10	5.63
	67 (19.4)	45.69	34.99	3.50	43.61	34.15	3.84	41.42	33.28	4.22	39.12	32.36	4.63	36.65	31.38	5.09	33.93	30.29	5.58
	63 (17.2)††	42.75	33.85	3.46	40.79	33.00	3.80	38.72	32.11	4.17	36.55	31.18	4.59	34.23	30.18	5.05	31.68	29.07	5.54
	62 (16.7)	42.52	42.08	3.46	40.87	40.87	3.80	39.14	39.14	4.18	37.31	37.31	4.61	35.32	35.32	5.07	33.09	33.09	5.56
	57 (13.9)	42.49	42.49	3.46	40.87	40.87	3.80	39.15	39.15	4.18	37.32	37.32	4.61	35.32	35.32	5.07	33.09	33.09	5.56

COOLING INDOOR MODEL	CAPACITY	POWER	FURNACE MODEL
*CAP**4221A**	1.00	1.00	
CAP**4224A**	1.00	1.00	
CAP**4817A**	0.99	0.99	
CAP**4821A**	1.01	1.01	
CAP**4824A**	1.01	1.01	
CNPF*4818A**	1.01	1.01	
CNPH*4221A**	1.00	1.00	
CNPH*4821A**	1.01	1.01	
CNPV*4217A**	1.00	1.00	
CNPV*4221A**	1.00	1.00	
CNPV*4821A**	1.01	1.01	
CNPV*4824A**	1.01	1.01	
CSPH*4212A**	1.00	1.00	
CSPH*4812A**	1.01	1.01	
FV4BN(B,F)003	0.99	0.94	
FV4BN(B,F)005	1.01	0.95	
FV4BNB006	1.04	0.95	
FX4CN(B,F)042	1.01	0.99	
FX4CN(B,F)048	1.04	0.99	
FY4ANF042	1.00	1.00	
FY4ANF048	1.02	1.02	
CNPH*4221A**	0.99	0.97	58CV(A,X)070–12
CNPH*4821A**	1.00	0.98	58CV(A,X)070–12
CSPH*4212A**	0.99	0.97	58CV(A,X)070–12
CSPH*4812A**	1.00	0.98	58CV(A,X)070–12
CAP**4817A**	0.98	0.93	58CV(A,X)090–16
CNPV*4217A**	0.99	0.93	58CV(A,X)090–16
CAP**4221A**	0.99	0.97	58CV(A,X)110–20
CAP**4821A**	1.00	0.96	58CV(A,X)110–20
CNPV*4221A**	0.99	0.94	58CV(A,X)110–20
CNPV*4821A**	1.00	0.96	58CV(A,X)110–20
CAP**4224A**	0.99	0.94	58CV(A,X)135–22
CAP**4824A**	1.00	0.94	58CV(A,X)135–22
CNPV*4824A**	1.00	0.94	58CV(A,X)135–22

COOLING INDOOR MODEL	CAPACITY	POWER	FURNACE MODEL
CAP**4817A**	1.00	0.94	58MEB040–12
CNPH*4221A**	0.99	0.93	58MEB040–12
CNPH*4821A**	1.00	0.94	58MEB040–12
CNPV*4217A**	1.00	0.94	58MEB040–12
CSPH*4212A**	1.00	0.94	58MEB040–12
CSPH*4812A**	1.00	0.94	58MEB040–12
CAP**4817A**	1.00	0.94	58MEB060–12
CNPH*4221A**	0.99	0.94	58MEB060–12
CNPH*4821A**	1.00	0.94	58MEB060–12
CNPV*4217A**	1.00	0.94	58MEB060–12
CSPH*4212A**	1.00	0.94	58MEB060–12
CSPH*4812A**	1.00	0.94	58MEB060–12
CAP**4817A**	1.00	0.94	58MEB080–12
CNPH*4221A**	0.99	0.93	58MEB080–12
CNPH*4821A**	1.00	0.94	58MEB080–12
CNPV*4217A**	1.00	0.94	58MEB080–12
CSPH*4212A**	1.00	0.94	58MEB080–12
CSPH*4812A**	1.00	0.94	58MEB080–12
CAP**4817A**	1.00	0.94	58MEB080–16
CNPH*4221A**	0.98	0.92	58MEB080–16
CNPH*4821A**	1.00	0.94	58MEB080–16
CNPV*4217A**	0.99	0.93	58MEB080–16
CSPH*4212A**	1.00	0.94	58MEB080–16
CSPH*4812A**	1.00	0.94	58MEB080–16
CAP**4221A**	0.99	0.93	58MEB100–20
CAP**4821A**	1.00	0.92	58MEB100–20
CNPH*4221A**	0.99	0.93	58MEB100–20
CNPH*4821A**	1.00	0.92	58MEB100–20
CNPV*4221A**	0.99	0.93	58MEB100–20
CNPV*4821A**	1.00	0.92	58MEB100–20
CSPH*4212A**	1.00	0.92	58MEB100–20
CSPH*4812A**	1.00	0.92	58MEB100–20
CAP**4224A**	0.99	0.91	58MEB120–20
CNPH*4221A**	0.99	0.93	58MEB120–20

COOLING INDOOR MODEL	CAPACITY	POWER	FURNACE MODEL
CNPH*4821A**	1.00	0.92	58MEB120–20
CNPV*4824A**	1.00	0.92	58MEB120–20
CSPH*4212A**	1.00	0.92	58MEB120–20
CSPH*4812A**	1.00	0.92	58MEB120–20
CAP**4224A**	0.98	0.96	58MV(B,C)040–14
CAP**4824A**	1.00	0.98	58MV(B,C)040–14
CNPH*4221A**	0.98	0.96	58MV(B,C)040–14
CNPH*4821A**	0.99	0.97	58MV(B,C)040–14
CNPV*4824A**	1.00	0.98	58MV(B,C)040–14
CSPH*4212A**	0.98	0.96	58MV(B,C)040–14
CSPH*4812A**	1.00	0.98	58MV(B,C)040–14
CAP**4817A**	0.98	0.93	58MV(B,C)060–14
CNPV*4217A**	0.99	0.94	58MV(B,C)060–14
CAP**4221A**	0.98	0.96	58MV(B,C)080–14
CAP**4821A**	0.99	0.97	58MV(B,C)080–14
CNPV*4221A**	0.98	0.96	58MV(B,C)080–14
CNPV*4821A**	0.99	0.97	58MV(B,C)080–14
CAP**4817A**	0.96	0.95	58PH*070–16
CNPH*4221A**	0.98	0.96	58PH*070–16
CNPH*4821A**	1.00	0.98	58PH*070–16
CNPV*4217A**	0.99	0.97	58PH*070–16
CSPH*4212A**	0.99	0.94	58PH*070–16
CSPH*4812A**	1.00	0.98	58PH*070–16
CAP**4221A**	0.99	0.93	58PH*090–16
CAP**4821A**	1.00	0.92	58PH*090–16
CNPH*4221A**	0.99	0.93	58PH*090–16
CNPH*4821A**	1.00	0.92	58PH*090–16
CNPV*4221A**	0.99	0.93	58PH*090–16
CNPV*4821A**	1.00	0.92	58PH*090–16
CSPH*4212A**	0.99	0.93	58PH*090–16
CSPH*4812A**	1.00	0.92	58PH*090–16
CAP**4221A**	0.99	0.91	58PH*110–20
CAP**4821A**	1.00	0.92	58PH*110–20

DETAILED COOLING CAPACITIES# CONTINUED

24ABB342A30 Outdoor Section With 42 Indoor Section

COOLING INDOOR MODEL	CAPACITY	POWER	FURNACE MODEL
CNPH*4221A**	0.99	0.91	58PH*110–20
CNPH*4821A**	1.00	0.92	58PH*110–20
CNPV*4221A**	0.99	0.91	58PH*110–20
CNPV*4821A**	1.00	0.92	58PH*110–20
CSPH*4212A**	0.99	0.91	58PH*110–20
CSPH*4812A**	1.00	0.92	58PH*110–20
CAP**4224A**	0.99	0.91	58PH*135–20
CAP**4824A**	1.00	0.92	58PH*135–20
CNPH*4221A**	0.99	0.93	58PH*135–20
CNPH*4821A**	1.00	0.92	58PH*135–20
CNPV*4824A**	1.00	0.92	58PH*135–20
CSPH*4212A**	0.99	0.91	58PH*135–20
CSPH*4812A**	1.00	0.92	58PH*135–20

See notes on page 26

DETAILED COOLING CAPACITIES# CONTINUED

EVAPORATOR AIR		CONDENSER ENTERING AIR TEMPERATURES °F (°C)																	
		75 (23.9)			85 (29.4)			95 (35)			105 (40.6)			115 (46.1)			125 (51.7)		
CFM	EWB °F (°C)	Capacity MBtuh		Total Sys. KW**	Capacity MBtuh		Total Sys. KW**	Capacity MBtuh		Total Sys. KW**	Capacity MBtuh		Total Sys. KW**	Capacity MBtuh		Total Sys. KW**	Capacity MBtuh		Total Sys. KW**
		Total	Sens‡		Total	Sens‡		Total	Sens‡		Total	Sens‡		Total	Sens‡		Total	Sens‡	
24ABB348A31 Outdoor Section With CAP**4821A** Indoor Section																			
1400	72 (22.2)	54.48	26.42	3.32	52.18	25.62	3.67	49.73	24.77	4.05	47.13	23.89	4.48	44.34	22.96	4.94	41.30	21.95	5.45
	67 (19.4)	49.80	32.57	3.30	47.63	31.74	3.64	45.34	30.88	4.03	42.93	29.97	4.45	40.34	29.02	4.92	37.58	28.02	5.43
	63 (17.2)††	46.41	31.55	3.28	44.36	30.70	3.63	42.19	29.82	4.01	39.89	28.90	4.44	37.46	27.94	4.91	34.91	26.94	5.42
	62 (16.7)	45.58	38.68	3.28	43.61	37.81	3.62	41.55	36.89	4.01	39.45	39.21	4.43	37.47	37.47	4.91	35.38	35.38	5.42
	57 (13.9)	44.55	44.55	3.27	42.94	42.94	3.62	41.23	41.23	4.01	39.42	39.42	4.43	37.47	37.47	4.91	35.39	35.39	5.42
1600	72 (22.2)	55.34	27.67	3.40	52.95	26.86	3.75	50.42	26.01	4.13	47.73	25.12	4.56	44.84	24.17	5.02	41.69	23.15	5.52
	67 (19.4)	50.62	34.60	3.38	48.38	33.76	3.72	46.00	32.88	4.11	43.51	31.98	4.53	40.84	31.01	5.00	38.00	29.98	5.51
	63 (17.2)††	47.22	33.46	3.36	45.08	32.60	3.71	42.83	31.71	4.09	40.47	30.78	4.52	37.96	29.80	4.99	35.33	28.77	5.49
	62 (16.7)	46.58	41.42	3.36	44.61	44.23	3.70	42.74	42.74	4.09	40.82	40.82	4.52	38.75	38.75	4.99	36.51	36.51	5.50
	57 (13.9)	46.27	46.27	3.36	44.56	44.56	3.70	42.75	42.75	4.09	40.82	40.82	4.52	38.75	38.75	4.99	36.52	36.52	5.50
1800	72 (22.2)	55.96	28.85	3.48	53.51	28.03	3.83	50.90	27.17	4.21	48.15	26.28	4.64	45.18	25.32	5.10	41.94	24.28	5.60
	67 (19.4)	51.21	36.53	3.46	48.91	35.69	3.80	46.48	34.81	4.19	43.93	33.88	4.61	41.20	32.89	5.08	38.30	31.83	5.58
	63 (17.2)††	47.80	35.26	3.44	45.61	34.40	3.79	43.31	33.50	4.17	40.89	32.56	4.60	38.33	31.55	5.06	35.64	30.47	5.57
	62 (16.7)	47.66	47.66	3.44	45.87	45.87	3.79	43.97	43.97	4.17	41.94	41.94	4.60	39.77	39.77	5.07	37.41	37.41	5.58
	57 (13.9)	47.67	47.67	3.44	45.88	45.88	3.79	43.97	43.97	4.17	41.95	41.95	4.60	39.77	39.77	5.07	37.41	37.41	5.58

Cooling Indoor Model	Capacity	Power	Furnace Model
*CAP**4821A**	1.00	1.00	
CAP**4817A**	0.98	0.98	
CAP**4824A**	0.99	0.99	
CAP**6021A**	1.00	0.98	
CAP**6024A**	1.01	0.99	
CNPF*4818A**	0.98	0.98	
CNPH*4821A**	0.99	0.99	
CNPH*6024A**	1.01	0.99	
CNPV*4821A**	0.99	0.99	
CNPV*4824A**	0.99	0.99	
CNPV*6024A**	1.01	0.99	
CSPH*4812A**	1.00	1.00	
CSPH*6012A**	1.01	0.99	
FE4AN(B,F)005	1.00	0.92	
FE4ANB006	1.01	0.91	
FV4BN(B,F)005	1.00	0.92	
FV4BNB006	1.01	0.91	
FX4CN(B,F)048	1.00	0.92	
FX4CN(B,F)060	1.03	0.95	
FY4ANB060	1.01	0.99	
FY4ANF048	0.99	0.97	
CAP**4817A**	0.98	0.94	58CV(A,X)090–16
CNPH*4821A**	0.98	0.92	58CV(A,X)090–16
CNPH*6024A**	1.00	0.94	58CV(A,X)090–16
CSPH*4812A**	0.99	0.93	58CV(A,X)090–16
CSPH*6012A**	1.00	0.92	58CV(A,X)090–16
CAP**4821A**	0.98	0.92	58CV(A,X)110–20
CAP**6021A**	1.00	0.92	58CV(A,X)110–20
CNPH*4821A**	0.98	0.92	58CV(A,X)110–20
CNPH*6024A**	1.00	0.92	58CV(A,X)110–20
CNPV*4821A**	0.98	0.92	58CV(A,X)110–20
CSPH*4812A**	0.98	0.92	58CV(A,X)110–20
CSPH*6012A**	1.00	0.92	58CV(A,X)110–20
CAP**4824A**	0.98	0.92	58CV(A,X)135–22

Cooling Indoor Model	Capacity	Power	Furnace Model
CAP**6024A**	1.00	0.92	58CV(A,X)135–22
CNPH*4821A**	0.98	0.92	58CV(A,X)135–22
CNPH*6024A**	1.00	0.92	58CV(A,X)135–22
CNPV*4824A**	0.98	0.92	58CV(A,X)135–22
CNPV*6024A**	1.00	0.92	58CV(A,X)135–22
CSPH*4812A**	0.98	0.92	58CV(A,X)135–22
CSPH*6012A**	1.00	0.92	58CV(A,X)135–22
CAP**4824A**	0.98	0.90	58CV(A,X)155–22
CAP**6024A**	1.00	0.90	58CV(A,X)155–22
CNPH*4821A**	0.99	0.91	58CV(A,X)155–22
CNPH*6024A**	1.00	0.90	58CV(A,X)155–22
CNPV*4824A**	0.98	0.90	58CV(A,X)155–22
CNPV*6024A**	1.00	0.90	58CV(A,X)155–22
CSPH*4812A**	0.98	0.90	58CV(A,X)155–22
CSPH*6012A**	1.00	0.90	58CV(A,X)155–22
CAP**4817A**	0.98	0.98	58MEB080–16
CNPH*4821A**	0.98	0.94	58MEB080–16
CNPH*6024A**	0.98	0.94	58MEB080–16
CSPH*4812A**	0.98	0.94	58MEB080–16
CSPH*6012A**	0.98	0.92	58MEB080–16
CAP**4821A**	0.98	0.92	58MEB100–20
CAP**6021A**	0.98	0.90	58MEB100–20
CNPH*4821A**	0.98	0.92	58MEB100–20
CNPH*6024A**	0.98	0.90	58MEB100–20
CNPV*4821A**	0.98	0.92	58MEB100–20
CSPH*4812A**	0.98	0.92	58MEB100–20
CSPH*6012A**	0.98	0.90	58MEB100–20
CAP**4824A**	0.98	0.92	58MEB120–20
CAP**6024A**	0.98	0.90	58MEB120–20
CNPH*4821A**	0.98	0.92	58MEB120–20
CNPH*6024A**	0.98	0.90	58MEB120–20
CNPV*4824A**	0.98	0.92	58MEB120–20
CNPV*6024A**	0.98	0.90	58MEB120–20
CSPH*4812A**	0.98	0.92	58MEB120–20

Cooling Indoor Model	Capacity	Power	Furnace Model
CSPH*6012A**	0.98	0.90	58MEB120–20
CAP**4821A**	0.97	0.93	58MV(B,C)080–20
CAP**6021A**	0.98	0.92	58MV(B,C)080–20
CNPH*4821A**	0.97	0.93	58MV(B,C)080–20
CNPH*6024A**	0.99	0.93	58MV(B,C)080–20
CNPV*4821A**	0.97	0.93	58MV(B,C)080–20
CSPH*4812A**	0.97	0.93	58MV(B,C)080–20
CSPH*6012A**	0.99	0.93	58MV(B,C)080–20
CAP**4821A**	0.98	0.96	58MV(B,C)100–20
CAP**6021A**	1.00	0.94	58MV(B,C)100–20
CNPH*4821A**	0.98	0.96	58MV(B,C)100–20
CNPH*6024A**	1.00	0.94	58MV(B,C)100–20
CNPV*4821A**	0.98	0.96	58MV(B,C)100–20
CSPH*4812A**	0.98	0.96	58MV(B,C)100–20
CSPH*6012A**	1.00	0.94	58MV(B,C)100–20
CAP**4824A**	0.98	0.94	58MV(B,C)120–20
CAP**6024A**	1.00	0.94	58MV(B,C)120–20
CNPH*4821A**	0.98	0.92	58MV(B,C)120–20
CNPH*6024A**	1.00	0.94	58MV(B,C)120–20
CNPV*4824A**	0.98	0.94	58MV(B,C)120–20
CNPV*6024A**	1.00	0.94	58MV(B,C)120–20
CSPH*4812A**	0.98	0.94	58MV(B,C)120–20
CSPH*6012A**	1.00	0.94	58MV(B,C)120–20
CAP**4821A**	0.98	0.92	58PH*090–16
CAP**6021A**	1.00	0.92	58PH*090–16
CNPH*4821A**	0.98	0.92	58PH*090–16
CNPH*6024A**	1.00	0.94	58PH*090–16
CNPV*4821A**	0.98	0.92	58PH*090–16
CSPH*4812A**	0.98	0.92	58PH*090–16
CSPH*6012A**	1.00	0.92	58PH*090–16
CAP**4821A**	0.98	0.92	58PH*110–20
CAP**6021A**	1.00	0.92	58PH*110–20
CNPH*4821A**	0.98	0.92	58PH*110–20

DETAILED COOLING CAPACITIES# CONTINUED

24ABB348A31 Outdoor Section With CAP4821A** Indoor Section**

Cooling Indoor Model	Capacity	Power	Furnace Model
CNPH*6024A**	1.00	0.92	58PH*110–20
CNPV*4821A**	0.98	0.92	58PH*110–20
CSPH*4812A**	0.98	0.92	58PH*110–20
CSPH*6012A**	1.00	0.92	58PH*110–20
CAP**4824A**	0.99	0.93	58PH*135–20
CAP**6024A**	1.00	0.92	58PH*135–20
CNPH*4821A**	0.99	0.93	58PH*135–20
CNPH*6024A**	1.00	0.92	58PH*135–20
CNPV*4824A**	0.99	0.93	58PH*135–20
CNPV*6024A**	1.00	0.92	58PH*135–20
CSPH*4812A**	0.99	0.93	58PH*135–20
CSPH*6012A**	1.00	0.92	58PH*135–20

See notes on page 26

DETAILED COOLING CAPACITIES# CONTINUED

EVAPORATOR AIR		CONDENSER ENTERING AIR TEMPERATURES °F (°C)																	
		75 (23.9)			85 (29.4)			95 (35)			105 (40.6)			115 (46.1)			125 (51.7)		
CFM	EWB °F (°C)	Capacity MBtuh		Total Sys. KW**	Capacity MBtuh		Total Sys. KW**	Capacity MBtuh		Total Sys. KW**	Capacity MBtuh		Total Sys. KW**	Capacity MBtuh		Total Sys. KW**	Capacity MBtuh		Total Sys. KW**
		Total	Sens‡		Total	Sens‡		Total	Sens‡		Total	Sens‡		Total	Sens‡		Total	Sens‡	
24ABB360A31 Outdoor Section With CAR**6034A** Indoor Section																			
1750	72 (22.2)	67.80	34.89	4.35	64.83	33.80	4.80	61.64	32.64	5.29	58.24	31.43	5.83	54.52	30.11	6.41	50.31	28.65	7.04
	67 (19.4)	62.53	43.30	4.28	59.78	42.18	4.73	56.82	41.00	5.22	53.69	39.76	5.76	50.29	38.43	6.35	46.47	36.96	6.99
	63 (17.2)††	58.72	42.13	4.23	56.15	41.01	4.68	53.37	39.81	5.17	50.43	38.56	5.71	47.26	37.23	6.31	43.72	35.76	6.95
	62 (16.7)	57.74	51.63	4.22	55.26	50.49	4.66	52.60	49.24	5.16	49.85	49.43	5.71	47.17	47.17	6.31	44.20	44.20	6.96
	57 (13.9)	56.44	56.44	4.20	54.39	54.39	4.65	52.16	52.16	5.15	49.79	49.79	5.71	47.18	47.18	6.31	44.20	44.20	6.96
2000	72 (22.2)	68.70	36.53	4.46	65.64	35.43	4.91	62.33	34.26	5.40	58.81	33.03	5.94	54.97	31.69	6.52	50.63	30.21	7.14
	67 (19.4)	63.42	45.98	4.39	60.56	44.86	4.83	57.50	43.66	5.33	54.27	42.41	5.87	50.76	41.06	6.46	46.84	39.55	7.09
	63 (17.2)††	59.63	44.67	4.34	56.94	43.52	4.78	54.07	42.32	5.28	51.04	41.05	5.82	47.76	39.69	6.41	44.11	38.17	7.06
	62 (16.7)	58.86	55.26	4.33	56.34	55.78	4.78	53.88	53.88	5.28	51.35	51.35	5.83	48.55	48.55	6.42	45.37	45.37	7.07
	57 (13.9)	58.44	58.44	4.32	56.26	56.26	4.78	53.88	53.88	5.28	51.35	51.35	5.83	48.56	48.56	6.42	45.38	45.38	7.07
2250	72 (22.2)	69.36	38.09	4.57	66.19	36.98	5.01	62.79	35.79	5.50	59.18	34.55	6.04	55.24	33.21	6.62	50.79	31.71	7.24
	67 (19.4)	64.04	48.55	4.49	61.12	47.42	4.94	57.98	46.21	5.43	54.67	44.94	5.97	51.08	43.55	6.56	47.07	41.97	7.19
	63 (17.2)††	60.27	47.08	4.44	57.52	45.93	4.89	54.56	44.70	5.38	51.46	43.41	5.92	48.11	42.01	6.51	44.39	40.42	7.16
	62 (16.7)	60.07	60.07	4.44	57.75	57.75	4.89	55.24	55.24	5.39	52.57	52.57	5.94	49.63	49.63	6.54	46.28	46.28	7.18
	57 (13.9)	60.07	60.07	4.44	57.75	57.75	4.89	55.25	55.25	5.39	52.58	52.58	5.94	49.64	49.64	6.54	46.28	46.28	7.18

COOLING INDOOR MODEL	CAPACITY	POWER	FURNACE MODEL
*CAP**6024A**	1.00	1.00	
CAP**6021A**	0.98	0.98	
CNPH*6024A**	0.99	0.99	
CNPV*6024A**	0.99	0.99	
CSPH*6012A**	1.00	1.00	
FV4BNB006	0.99	0.97	
FX4CN(B,F)060	1.01	1.01	
FY4ANB060	0.98	0.98	
CAP**6021A**	0.97	0.97	58CV(A,X)110–20
CSPH*6012A**	0.98	0.98	58CV(A,X)110–20
CAP**6024A**	0.98	0.98	58CV(A,X)135–22
CNPH*6024A**	0.97	0.96	58CV(A,X)135–22
CNPV*6024A**	0.97	0.97	58CV(A,X)135–22

COOLING INDOOR MODEL	CAPACITY	POWER	FURNACE MODEL
CSPH*6012A**	0.98	0.97	58CV(A,X)135–22
CAP**6024A**	0.98	0.97	58CV(A,X)155–22
CNPH*6024A**	0.98	0.97	58CV(A,X)155–22
CNPV*6024A**	0.98	0.97	58CV(A,X)155–22
CSPH*6012A**	0.98	0.97	58CV(A,X)155–22
CAP**6021A**	0.98	0.98	58MEB100–20
CNPH*6024A**	0.98	0.98	58MEB100–20
CSPH*6012A**	0.98	0.98	58MEB100–20
CAP**6024A**	0.98	0.98	58MEB120–20
CNPH*6024A**	0.98	0.98	58MEB120–20
CNPV*6024A**	0.98	0.98	58MEB120–20
CSPH*6012A**	0.98	0.98	58MEB120–20
CAP**6021A**	0.97	1.01	58MV(B,C)080–20

COOLING INDOOR MODEL	CAPACITY	POWER	FURNACE MODEL
CAP**6021A**	0.97	0.99	58MV(B,C)100–20
CAP**6024A**	0.98	0.98	58MV(B,C)120–20
CAP**6021A**	0.97	0.97	58PH*090–16
CNPH*6024A**	0.97	0.97	58PH*090–16
CSPH*6012A**	0.97	0.97	58PH*090–16
CAP**6021A**	0.97	0.96	58PH*110–20
CNPH*6024A**	0.98	0.97	58PH*110–20
CSPH*6012A**	0.98	0.97	58PH*110–20
CAP**6024A**	0.97	0.97	58PH*135–20
CNPH*6024A**	0.97	0.97	58PH*135–20
CNPV*6024A**	0.97	0.97	58PH*135–20
CSPH*6012A**	0.97	0.97	58PH*135–20

* Tested combination.

† Total and sensible capacities are net capacities. Blower motor heat has been subtracted.

‡ Sensible capacities shown are based on 80°F (27°C) entering air at the indoor coil. For sensible capacities at other than 80°F (27°C), deduct 835 Btuh (245 kW) per 1000 CFM (480 L/S) of indoor coil air for each degree below 80°F (27°C), or add 835 Btuh (245 kW) per 1000 CFM (480 L/S) of indoor coil air per degree above 80°F (27°C).

Detailed cooling capacities are based on indoor and outdoor unit at the same elevation per ARI standard 210/240–94. If additional tubing length and/or indoor unit is located above outdoor unit, a slight variation in capacity may occur.

** System kw is total of indoor and outdoor unit kilowatts.

†† At TVA rating indoor condition (75°F edb/63°F ewb). All other indoor air temperatures are at 80°F edb.

NOTE: When the required data falls between the published data, interpolation may be performed. Extrapolation is not an acceptable practice.

EWB — Entering Wet Bulb

NOTE: When the required data fall between the published data, interpolation may be performed. Extrapolation is not an acceptable practice.

CONDENSER ONLY RATINGS*

SST °F (°C)		CONDENSER ENTERING AIR TEMPERATURES °F (°C)							
		55 (12.78)	65 (18.33)	75 (23.89)	85 (29.44)	95 (35.0)	105 (40.56)	115 (46.11)	125 (51.67)
24ABB318A31									
30 (−1.11)	TCG	16.10	15.20	14.20	13.30	12.30	11.30	10.20	9.10
	SDT	70.80	80.40	89.90	99.50	109.10	118.80	128.60	138.50
	KW	0.83	0.95	1.09	1.24	1.40	1.57	1.76	1.95
35 (1.67)	TCG	17.70	16.70	15.70	14.70	13.70	12.60	11.50	10.30
	SDT	71.90	81.40	90.90	100.40	109.90	119.60	129.40	139.10
	KW	0.83	0.95	1.09	1.24	1.40	1.58	1.77	1.97
40 (4.44)	TCG	19.50	18.40	17.40	16.20	15.10	14.00	12.80	11.50
	SDT	73.00	82.50	91.90	101.30	110.80	120.40	130.10	139.70
	KW	0.83	0.95	1.09	1.23	1.40	1.58	1.77	1.98
45 (7.22)	TCG	21.30	20.20	19.00	17.90	16.70	15.40	14.20	12.80
	SDT	74.20	83.60	93.00	102.30	111.70	121.20	130.70	140.30
	KW	0.83	0.95	1.08	1.23	1.40	1.58	1.78	1.99
50 (10.0)	TCG	23.30	22.00	20.80	19.50	18.20	16.90	15.60	14.20
	SDT	75.40	84.80	94.10	103.40	112.60	122.00	131.40	140.90
	KW	0.82	0.95	1.08	1.23	1.40	1.58	1.78	1.99
55 (12.78)	TCG	25.20	23.90	22.50	21.20	19.80	18.50	17.00	15.50
	SDT	76.70	86.00	95.20	104.40	113.60	122.90	132.20	141.50
	KW	0.82	0.94	1.08	1.23	1.39	1.58	1.78	1.99
24ABB324A31									
30 (−1.11)	TCG	21.30	20.10	18.90	17.70	16.50	15.20	14.00	12.60
	SDT	73.00	82.40	91.80	101.20	110.60	120.20	129.80	139.40
	KW	1.06	1.21	1.37	1.56	1.77	1.99	2.24	2.51
35 (1.67)	TCG	23.40	22.10	20.90	19.60	18.20	16.90	15.50	14.10
	SDT	74.40	83.60	93.00	102.30	111.70	121.10	130.60	140.20
	KW	1.06	1.21	1.38	1.57	1.77	2.00	2.25	2.52
40 (4.44)	TCG	25.60	24.20	22.90	21.50	20.00	18.60	17.10	15.60
	SDT	75.80	85.00	94.20	103.50	112.70	122.10	131.50	140.90
	KW	1.07	1.22	1.39	1.58	1.78	2.01	2.26	2.53
45 (7.22)	TCG	27.90	26.40	24.90	23.40	21.90	20.40	18.80	17.10
	SDT	77.30	86.30	95.50	104.70	113.80	123.10	132.30	141.60
	KW	1.08	1.23	1.40	1.58	1.79	2.02	2.27	2.54
50 (10.0)	TCG	30.20	28.60	27.00	25.40	23.70	22.10	20.40	18.60
	SDT	78.80	87.80	96.80	105.90	114.90	124.10	133.30	142.40
	KW	1.09	1.24	1.40	1.59	1.80	2.03	2.28	2.55
55 (12.78)	TCG	32.60	30.80	29.10	27.30	25.60	23.90	22.10	20.20
	SDT	80.30	89.20	98.20	107.10	116.10	125.20	134.20	143.10
	KW	1.09	1.25	1.41	1.60	1.81	2.03	2.28	2.55
24ABB330A31									
30 (−1.11)	TCG	25.40	24.00	22.60	21.10	19.60	18.00	16.40	14.60
	SDT	74.40	83.60	92.90	102.10	111.40	120.80	130.20	139.60
	KW	1.35	1.52	1.70	1.91	2.13	2.37	2.63	2.89
35 (1.67)	TCG	28.00	26.50	24.90	23.40	21.70	20.00	18.30	16.40
	SDT	75.90	85.00	94.20	103.40	112.60	121.90	131.20	140.50
	KW	1.35	1.52	1.71	1.92	2.15	2.39	2.65	2.92
40 (4.44)	TCG	30.70	29.10	27.40	25.70	24.00	22.20	20.30	18.40
	SDT	77.40	86.50	95.60	104.70	113.80	123.00	132.20	141.40
	KW	1.35	1.53	1.72	1.93	2.15	2.40	2.67	2.95
45 (7.22)	TCG	33.50	31.80	30.00	28.20	26.30	24.40	22.40	20.30
	SDT	79.00	88.00	97.00	106.10	115.10	124.20	133.30	142.30
	KW	1.36	1.53	1.72	1.93	2.16	2.42	2.69	2.97
50 (10.0)	TCG	36.50	34.60	32.70	30.70	28.70	26.70	24.60	22.30
	SDT	80.70	89.70	98.50	107.50	116.40	125.40	134.30	143.20
	KW	1.36	1.54	1.73	1.94	2.17	2.43	2.70	2.99
55 (12.78)	TCG	39.50	37.40	35.30	33.20	31.10	29.00	26.70	24.30
	SDT	82.40	91.30	100.10	108.90	117.80	126.60	135.40	144.20
	KW	1.37	1.54	1.74	1.95	2.18	2.44	2.71	3.00
24ABB336A31									
30 (−1.11)	TCG	30.30	28.80	27.20	25.50	23.80	22.00	20.00	18.00
	SDT	73.20	82.20	91.40	100.60	109.90	119.10	128.40	137.80
	KW	1.65	1.85	2.07	2.30	2.57	2.88	3.25	3.68
35 (1.67)	TCG	33.50	31.80	30.10	28.30	26.40	24.40	22.30	20.10
	SDT	74.80	83.80	92.80	102.00	111.10	120.30	129.50	138.70
	KW	1.66	1.87	2.08	2.32	2.59	2.90	3.26	3.69
40 (4.44)	TCG	37.00	35.10	33.20	31.20	29.20	27.00	24.80	22.40
	SDT	76.60	85.40	94.40	103.40	112.40	121.50	130.60	139.70
	KW	1.68	1.89	2.10	2.34	2.61	2.92	3.28	3.70
45 (7.22)	TCG	40.70	38.60	36.50	34.30	32.10	29.80	27.40	24.80
	SDT	78.50	87.20	96.00	104.90	113.80	122.80	131.80	140.80
	KW	1.70	1.91	2.13	2.37	2.63	2.94	3.30	3.72
50 (10.0)	TCG	44.60	42.30	40.00	37.70	35.30	32.80	30.20	27.40
	SDT	80.50	89.10	97.80	106.50	115.30	124.20	133.00	141.90
	KW	1.73	1.94	2.16	2.40	2.66	2.97	3.32	3.73
55 (12.78)	TCG	48.80	46.30	43.80	41.30	38.70	36.00	33.20	30.20
	SDT	82.60	91.10	99.60	108.20	116.90	125.60	134.30	143.00
	KW	1.77	1.97	2.19	2.43	2.70	3.00	3.35	3.76

See notes on page 29

CONDENSER ONLY RATINGS* CONTINUED

SST °F (°C)		CONDENSER ENTERING AIR TEMPERATURES °F (°C)							
		55 (12.78)	65 (18.33)	75 (23.89)	85 (29.44)	95 (35.0)	105 (40.56)	115 (46.11)	125 (51.67)
24ABB342A30									
30 (−1.11)	TCG	38.00	36.00	33.90	31.90	29.70	27.60	25.30	22.90
	SDT	73.20	82.30	91.40	100.60	109.80	119.10	128.40	137.70
	KW	1.95	2.20	2.48	2.80	3.14	3.53	3.95	4.41
35 (1.67)	TCG	41.90	39.70	37.40	35.10	32.80	30.50	28.00	25.50
	SDT	74.80	83.70	92.80	101.90	111.00	120.20	129.40	138.60
	KW	1.97	2.22	2.50	2.81	3.16	3.54	3.97	4.43
40 (4.44)	TCG	46.00	43.60	41.10	38.70	36.20	33.60	30.90	28.10
	SDT	76.40	85.20	94.20	103.20	112.20	121.30	130.40	139.50
	KW	1.98	2.23	2.52	2.83	3.18	3.56	3.98	4.44
45 (7.22)	TCG	50.30	47.70	45.10	42.40	39.60	36.80	33.90	30.90
	SDT	78.10	86.90	95.70	104.60	113.50	122.50	131.40	140.40
	KW	2.01	2.26	2.54	2.85	3.19	3.58	4.00	4.45
50 (10.0)	TCG	54.90	52.10	49.20	46.20	43.20	40.20	37.00	33.60
	SDT	80.00	88.60	97.20	106.00	114.80	123.70	132.50	141.30
	KW	2.03	2.28	2.56	2.87	3.21	3.60	4.01	4.47
55 (12.78)	TCG	59.70	56.60	53.40	50.20	46.90	43.50	40.10	36.40
	SDT	81.90	90.30	98.90	107.50	116.20	124.90	133.60	142.20
	KW	2.06	2.30	2.58	2.89	3.23	3.62	4.03	4.48
24ABB348A31									
30 (−1.11)	TCG	41.10	38.90	36.70	34.40	32.10	29.70	27.20	24.50
	SDT	73.80	83.00	92.30	101.60	111.00	120.40	129.70	139.10
	KW	2.19	2.46	2.76	3.10	3.47	3.87	4.30	4.76
35 (1.67)	TCG	45.20	42.80	40.50	38.00	35.50	32.90	30.20	27.40
	SDT	75.30	84.40	93.70	102.90	112.20	121.50	130.80	140.00
	KW	2.22	2.49	2.79	3.13	3.50	3.90	4.34	4.81
40 (4.44)	TCG	49.60	47.10	44.50	41.90	39.20	36.40	33.50	30.40
	SDT	76.90	86.00	95.10	104.30	113.40	122.60	131.80	141.00
	KW	2.24	2.51	2.82	3.15	3.53	3.93	4.38	4.85
45 (7.22)	TCG	54.30	51.60	48.80	46.00	43.10	40.10	36.90	33.60
	SDT	78.50	87.50	96.60	105.70	114.70	123.80	132.90	142.00
	KW	2.27	2.54	2.85	3.19	3.56	3.97	4.41	4.89
50 (10.0)	TCG	59.30	56.40	53.40	50.30	47.10	43.90	40.50	36.90
	SDT	80.20	89.20	98.10	107.10	116.10	125.10	134.10	143.00
	KW	2.30	2.58	2.88	3.22	3.59	4.00	4.45	4.92
55 (12.78)	TCG	64.60	61.40	58.10	54.80	51.40	47.90	44.20	40.30
	SDT	82.10	91.00	99.80	108.70	117.50	126.40	135.20	144.00
	KW	2.34	2.61	2.92	3.25	3.63	4.04	4.48	4.96
24ABB360A31									
30 (−1.11)	TCG	57.30	54.20	51.10	47.90	44.60	41.30	37.80	34.10
	SDT	77.40	86.30	95.20	104.30	113.30	122.30	131.30	140.30
	KW	2.71	3.05	3.43	3.86	4.33	4.84	5.40	5.99
35 (1.67)	TCG	62.90	59.50	56.10	52.60	49.00	45.40	41.60	37.50
	SDT	79.30	88.00	96.90	105.80	114.70	123.70	132.60	141.40
	KW	2.76	3.11	3.49	3.92	4.39	4.90	5.46	6.06
40 (4.44)	TCG	68.70	65.00	61.30	57.50	53.60	49.60	45.50	41.00
	SDT	81.30	89.90	98.70	107.50	116.20	125.00	133.80	142.50
	KW	2.83	3.17	3.56	3.98	4.45	4.96	5.52	6.12
45 (7.22)	TCG	74.80	70.80	66.70	62.60	58.30	54.00	49.40	44.60
	SDT	83.40	91.90	100.50	109.20	117.80	126.50	135.10	143.60
	KW	2.90	3.24	3.62	4.05	4.52	5.03	5.58	6.18
50 (10.0)	TCG	81.20	76.80	72.30	67.80	63.10	58.40	53.40	48.10
	SDT	85.60	94.00	102.50	111.00	119.50	128.00	136.40	144.70
	KW	2.97	3.32	3.70	4.12	4.59	5.10	5.65	6.24
55 (12.78)	TCG	87.80	83.00	78.10	73.10	68.10	62.90	57.50	51.70
	SDT	88.00	96.20	104.40	112.80	121.10	129.50	137.70	145.80
	KW	3.05	3.40	3.78	4.20	4.66	5.17	5.72	6.30

* ARI listing applies only to systems shown in Combination Ratings table.

KW – Outdoor Unit Kilowatts Only.

SDT – Saturated Temperature Leaving Compressor (°F/°C)

SST – Saturated Temperature Entering Compressor (°F/°C)

TCG – Gross Cooling Capacity (1000 Btuh)

GUIDE SPECIFICATIONS
GENERAL

System Description

Outdoor-mounted, air-cooled, split-system air conditioner unit suitable for ground or rooftop installation. Unit consists of a hermetic compressor, an air-cooled coil, propeller-type condenser fan, and a control box. Unit will discharge supply air upward as shown on contract drawings. Unit will be used in a refrigeration circuit to match up to a packaged fan coil or coil unit.

Quality Assurance

— Unit will be rated in accordance with the latest edition of ARI Standard 210.

— Unit will be certified for capacity and efficiency, and listed in the latest ARI directory.

— Unit construction will comply with latest edition of ANSI/ ASHRAE and with NEC.

— Unit will be constructed in accordance with UL standards and will carry the UL label of approval. Unit will have c-UL-us approval.

— Unit cabinet will be capable of withstanding Federal Test Method Standard No. 141 (Method 6061) 500-hr salt spray test.

— Air-cooled condenser coils will be leak tested at 150 psig and pressure tested at 450 psig.

— Unit constructed in ISO9001 approved facility.

Delivery, Storage, and Handling

— Unit will be shipped as single package only and is stored and handled per unit manufacturer's recommendations.

Warranty (for inclusion by specifying engineer)

— U.S. and Canada only.

PRODUCTS

Equipment

Factory assembled, single piece, air-cooled air conditioner unit. Contained within the unit enclosure is all factory wiring, piping, controls, compressor, refrigerant charge Puron® (R-410A), and special features required prior to field start-up.

Unit Cabinet

— Unit cabinet will be constructed of galvanized steel, bonderized, and coated with a powder coat paint.

Fans

— Condenser fan will be direct-drive propeller type, discharging air upward.

— Condenser fan motors will be totally enclosed, 1-phase type with class B insulation and permanently lubricated bearings. Shafts will be corrosion resistant.

— Fan blades will be statically and dynamically balanced.

— Condenser fan openings will be equipped with coated steel wire safety guards.

Compressor

— Compressor will be hermetically sealed.

— Compressor will be mounted on rubber vibration isolators.

Condenser Coil

— Condenser coil will be air cooled.

— Coil will be constructed of aluminum fins mechanically bonded to copper tubes which are then cleaned, dehydrated, and sealed.

Refrigeration Components

— Refrigeration circuit components will include liquid-line shutoff valve with sweat connections, vapor-line shutoff valve with sweat connections, system charge of Puron® (R-410A) refrigerant, and compressor oil.

— Unit will be equipped with high-pressure switch, low pressure switch and filter drier for Puron refrigerant.

Operating Characteristics

— The capacity of the unit will meet or exceed _____ Btuh at a suction temperature of _____ °F/°C. The power consumption at full load will not exceed _____ kW.

— Combination of the unit and the evaporator or fan coil unit will have a total net cooling capacity of _____ Btuh or greater at conditions of _____ CFM entering air temperature at the evaporator at _____ °F/°C wet bulb and _____ °F/°C dry bulb, and air entering the unit at _____ °F/°C.

— The system will have a SEER of _____ Btuh/watt or greater at DOE conditions.

Electrical Requirements

— Nominal unit electrical characteristics will be _____ v, single phase, 60 hz. The unit will be capable of satisfactory operation within voltage limits of _____ v to _____ v.

— Unit electrical power will be single point connection.

— Control circuit will be 24v.

Special Features

— Refer to section of this literature identifying accessories and descriptions for specific features and available enhancements.

Copyright 2009 Carrier Corp. • 7310 W. Morris St. • Indianapolis, IN 46231

Printed in U.S.A. Edition Date: 02/09

Catalog No: 24ABB3–3PD

Manufacturer reserves the right to change, at any time, specifications and designs without notice and without obligations.

Replaces: 24**ABB3–2PD**