25HCE4
Comfort™ 14 Heat Pump with Puron® Refrigerant 1–1/2 to 5 Nominal Tons

Carrier
turn to the experts

Product Data

Puron

Comfort SERIES

Carrier heat pumps with Puron® refrigerant provide a collection of features unmatched by any other family of equipment. The 25HCE4 has been designed utilizing Carrier's non-ozone depleting Puron® refrigerant.

NOTE: Ratings contained in this document are subject to change at any time. Always refer to the AHRI directory (www.ahridirectory.org) for the most up-to-date ratings information.

INDUSTRY LEADING FEATURES / BENEFITS

Efficiency

- 14 SEER / 11.5 - 11.7 EER / 8.2 HSPF
- Microtube Technology™ refrigeration system
- Indoor air quality accessories available

Sound

- Sound level as low as 69 dBA
- Sound levels as low as 68 dBA with accessory sound blanket

Comfort

- System supports CôR™, Edge® or standard thermostat controls

Reliability

- Non-ozone depleting Puron® refrigerant
- Scroll compressor
- Internal pressure relief valve
- Internal thermal overload
- High pressure switch
- Loss of charge switch
- Filter drier
- Balanced refrigeration system for maximum reliability

Durability

WeatherArmor™ protection package:

- Solid, durable sheet metal construction
- Dense wire coil guard
- Baked-on powder paint

Applications

- Long-line - up to 250 feet (76.20 m) total equivalent length, up to 200 feet (60.96 m) condenser above evaporator, or up to 80 ft. (24.38 m) evaporator above condenser (See Longline Guide for more information.)
- Low ambient (down to -20°F/-28.9°C) with accessory kit

MODEL NUMBER NOMENCLATURE

1	2	3	4	5	6	7	8	9	10	11	12	13
N	N	A	A	A/N	N	N	N	A/N	A/N	A/N	N	N
2	5	H	C	E	4	3	6	A	0	0	3	0
Product Series		Product Family	Tier	Major Series	SEER	Cooling Capacity		Grille Variations	Open	Open	Voltage	Minor Series
25 = HP		H = RES HP	C=Comfort	E = Puron	4=14 SEER			A=Dense Grille	0=Not Defined	0=Not Defined	3=208/230–1	0, 1, 2...

Use of the AHRI Certified TM Mark indicates a manufacturer's participation in the program For verification of certification for individual products, go to www.ahridirectory.org.

STANDARD FEATURES

Feature	18	24	30	36	42	48	60
Puron Refrigerant	X	X	X	X	X	X	X
Scroll Compressor	X	X	X	X	X	X	X
Field Installed Filter Drier	X	X	X	X	X	X	X
Front Seating Service Valves	X	X	X	X	X	X	X
Internal Pressure Relief Valve	X	X	X	X	X	X	X
Internal Thermal Overload	X	X	X	X	X	X	X
Long Line capability	X	X	X	X	X	X	X
Low Ambient capability with Kit	X	X	X	X	X	X	X
Suction Line Accumulator	X	X	X	X	X	X	X
High Pressure Switch	X	X	X	X	X	X	X
Loss of Charge Switch	X	X	X	X	X	X	X

X = Standard

PHYSICAL DATA

UNIT SIZE SERIES	18–30	24–30	30–30	36–31	42–30	48–30	60–30
Compressor Type	Scroll						
REFRIGERANT	Puron® (R–410A)						
Control	TXV (Puron Hard Shutoff)						
Outdoor Heating Piston #	42	46	49	57	61	65	73
Charge lb (kg)	5.3 (2.4)	5.6 (2.5)	6.4 (2.9)	7.67 (3.48)	8.25 (3.74)	8.68 (3.94)	10.6 (4.81)
COND FAN	Forwrard Swept or Propeller Type, Direct Drive						
Air Discharge	Vertical						
Motor HP	1/12	1/10	1/4	1/5	1/4	1/4	1/4
Motor RPM	1100	1100	1100	1100	1100	1100	800
CFM	1700	2195	3365	3165	3800	3365	4470
VALVE CONNECT. (In. ID)							
Vapor	5/8	5/8	3/4	3/4	7/8	7/8	7/8
Liquid	3/8						
REFRIGERANT TUBES* (In. OD)							
Rated Vapor	5/8	5/8	3/4	3/4	7/8	7/8	1–1/8
Max Liquid Line	3/8						

*Units are rated with 25 ft (7.6 m) of lineset length. See *Vapor Line Sizing and Cooling Capacity Loss* table when using other sizes and lengths of lineset.

Note: See unit Installation Instruction for proper installation.

VAPOR LINE SIZING AND COOLING CAPACITY LOSS

Acceptable vapor line diameters provide adequate oil return to the compressor while avoiding excessive capacity loss. The suction line diameters shown in the chart below are acceptable for HP systems with Puron refrigerant:

Vapor Line Sizing and Cooling Capacity Losses - Puron® Refrigerant 1- Stage Heat Pump Applications

Unit Nominal Size (Btuh)	Acceptable Vapor Line Diameters (In. OD)	Cooling Capacity Loss (%) Total Equivalent Line Length (ft)										
		Standard Application				Long Line Application Requries Accessories						
		25 (7.62)	50 (15.2)	80 (24.4)	80+ (24.4+)	100 (30.48)	125 (38.10)	150 (45.72)	175 (53.34)	200 (60.96)	225 (68.58)	250 (76.20)
18000 1–Stage HP	1/2	1	2	3	3	4	6	7	8	9	10	12
	5/8	0	0	1	1	1	1	2	2	3	3	3
24000 1–Stage HP	5/8	0	1	1	1	2	3	3	4	4	5	6
	3/4	0	0	0	0	0	1	1	1	1	1	2
30000 1–Stage HP	5/8	1	2	3	3	3	4	5	6	7	8	9
	3/4	0	0	1	1	1	1	2	2	2	3	3
	7/8	0	0	0	0	0	1	1	1	1	1	1
36000 1–Stage HP	5/8	1	2	4	4	5	6	7	9	10	11	13
	3/4	0	0	1	1	1	2	2	3	3	4	4
	7/8	0	0	0	0	0	1	1	1	1	2	2
42000 1–Stage HP	3/4	0	1	2	2	2	3	4	4	5	6	6
	7/8	0	0	1	1	1	1	2	2	2	3	3
48000 1–Stage HP	3/4	0	1	2	2	3	4	5	5	6	7	8
	7/8	0	0	1	1	1	2	2	2	3	3	4
60000 1–Stage Puron HP	3/4	1	2	4	4	5	6	7	9	10	11	12
	7/8	0	1	2	2	2	3	4	4	5	5	6
	1 1/8	0	0	0	0	1	1	1	1	1	1	2

Standard Length = 80 ft. (24.4 m) or less total equivalent length

Applications in this area are long line. Accessories are required as shown recommended on Long Line Application Guidelines

Applications in this area may have height restrictions that limit allowable total equivalent length, when outdoor unit is below indoor unit See Long Line Application Guidelines

REFRIGERANT PIPING LENGTH LIMITATIONS

Maximum Line Lengths:

The maximum allowable total equivalent length for heat pumps varies depending on the vertical separation. See the tables below for allowable lengths depending on whether the outdoor unit is on the same level, above or below the outdoor unit.

Maximum Line Lengths for Heat Pump Applications

	MAXIMUM ACTUAL LENGTH ft (m)	MAXIMUM EQUIVALENT LENGTH† ft (m)	MAXIMUM VERTICAL SEPARATION ft (m)
Units on equal level	200 (61)	250 (76.2)	N/A
Outdoor unit ABOVE indoor unit	200 (61)	250 (76.2)	200 (61)
Outdoor unit BELOW indoor unit	See Table *'Maximum Total Equivalent Length: Outdoor Unit BELOW Indoor Unit'*		

† Total equivalent length accounts for losses due to elbows or fitting. See the Long Line Guideline for details.

Maximum Total Equivalent Length† - Outdoor Unit BELOW Indoor Unit

Size	Liquid Line Diameter w/ TXV	HP with Puron® Refrigerant – Maximum Total Equivalent Length† Vertical Separation ft (m) Outdoor unit BELOW indoor unit;						
		0 – 20 (0 – 6.1)	21 – 30 (6.4 – 9.1)	31 – 40 (9.4 – 12.2)	41 – 50 (12.5 – 15.2)	51 – 60 (15.5 – 18.3)	61 – 70 (18.6 – 21.3)	71 – 80 (21.6 – 24.4)
18000 HP with Puron	3/8	250*	250*	250*	250*	250*	250*	250*
24000 HP with Puron	3/8	250*	250*	250*	250*	250*	250*	250*
30000 HP with Puron	3/8	250*	250*	250*	250*	250*	250*	250*
36000 HP with Puron	3/8	250*	250*	250*	250*	250*	250*	250*
42000 HP with Puron	3/8	250*	250*	250*	250*	250*	250*	150
48000 HP with Puron	3/8	250*	250*	250*	250*	230	160	– –
60000 HP with Puron	3/8	250*	225*	190	150	110	– –	– –

*** Maximum actual length not to exceed 200 ft (61 m)**

† Total equivalent length accounts for losses due to elbows or fitting. See the Long Line Guideline for details.

– – = outside acceptable range

LONG LINE APPLICATIONS

An application is considered Long Line when the refrigerant level in the system requires the use of accessories to maintain acceptable refrigerant management for systems reliability. Defining a system as long line depends on the liquid line diameter, actual length of the tubing, and vertical separation between the indoor and outdoor units.

For Heat Pump systems, the chart below shows when an application is considered Long Line. Beyond these lengths, long line accessories are required:

HP WITH PURON® REFRIGERANT LONG LINE DESCRIPTION ft (m)
Beyond these lengths, long line accessories are required

Liquid Line Size	Units On Same Level	Outdoor Below Indoor	Outdoor Above Indoor
3/8	80 (24.4)	20 (6.1) vertical or 80 (24.4) total	80 (24.4)

Note: See Long Line Guideline for details

ACCESSORIES

ORDER NUMBER	DESCRIPTION	18–30	24–30	30–30	36–30	42–30	48–30	60–30
HC32GE234	BALL BEARING FAN MOTOR	X						
HC34GE240	BALL BEARING FAN MOTOR		X					
HC38GE219	BALL BEARING FAN MOTOR				X			
HC40GE226	BALL BEARING FAN MOTOR			X		X	X	
HC40GE228	BALL BEARING FAN MOTOR							X
KAACH1601AAA	CRKC HTR KIT					X	X	
KAACH1701AAA	CRKC HTR KIT	X	X	X	X			
KAACS0201PTC	KIT PTC	X	X	X	X	X	X	X
KAAFT0101AAA	FRZ THERM KIT	X	X	X	X	X	X	X
KAATD0101TDR	TIME DELAY KIT	X	X	X	X	X	X	X
KHAIR0201AAA	ISLN RELAY KIT	X	X	X	X	X	X	X
KHALS0401LLS	SOL VALVE KIT	X	X	X	X	X	X	X
KHAOT0201SEC	OUTDR THERM KIT	X	X	X	X	X	X	X
KHAOT0301FST	OUTDR THERM KIT	X	X	X	X	X	X	X
KHASS0606MPK	SNOW STAND KIT	X	X	X	X	X	X	X
KSACY0101AAA	CYCLE PROTR KIT	X	X	X	X	X	X	X
KSAHS1701AAA	HARD START KIT	X	X	X	X	X	X	X
KSALA0301410	LOW AMBIENT KIT	X	X	X	X	X	X	X
KSALA0601AAA	MOTORMASTER KIT	X	X	X	X	X	X	X
KSASF0101AAA	SPRT FEET KIT			X	X	X	X	X
KSASF0201AAA	SPRT FEET KIT	X	X					
KSASH0601COP	SOUND BLKT KIT	X	X	X	X	X		
KSASH2101COP	SOUND BLKT KIT						X	X
KSATX0201PUR	TXV KIT (for copper coils)	X	X	X				
KSATX0301PUR	TXV KIT (for copper coils)				X	X		
KSATX0501PUR	TXV KIT (for copper coils)						X	X
KSBTX0201PUR	TXV KIT (for aluminum coils)	X	X	X				
KSBTX0301PUR	TXV KIT (for aluminum coils)				X	X		
KSBTX0401PUR	TXV KIT (for aluminum coils)						X	X

x = Accessory

ACCESSORY THERMOSTATS

Part Number	Description	Capabilities			Heat Stages	Cooling Stages
		Gas	Electric	Heat Pump		
TP–WEM01	CôR™, Wi–Fi Programmable Relative Humidity Thermostat	X	X	X	4	2
TP–PRH01–A	edge™ Programmable Relative Humidity Thermostat	X	X	X	3	2
TP–PHP01	edge™ Programmable Thermostat (HP or AC)		X	X	3	2
TP–NRH01	edge™ Non–Programmable Relative Humidity Thermostat	X	X	X	3	2
TP–NHP01	edge™ Non–Programmable Thermostat (HP or AC)		X	X	3	2
TC–WHS01	Wi–Fi® Programmable	X	X	X	3	2
TC–PHP01	Programmable Thermostat (HP or AC)		X	X	3	2
TC–NHP01	Non–Programmable Thermostat (HP or AC)		X	X	3	2
TB–PHP01	Programmable Thermostat (HP or AC)		X	X	2	1
TB–NHP01	Non–Programmable Thermostat (HP or AC)		X	X	2	1

Thermostat Accessories		
Part Number	**Description**	**Used With**
TP–EXP	EXP® Card for Programmable Thermostats	TP–Pxx
TSTATXXCNV10	Thermostat Conversion Kit (4 to 5 wire) 10 pack	All Carrier branded thermostats
TX–LBP01	Large Decorative Backplate	TP–Pxx, TP–Nxx, TC–Pxx
TX–MBP01	Medium Decorative Backplate	TC–Nxx, TB–Pxx
TX–SBP01	Small Decorative Backplate	TB–Nxx

ACCESSORY USAGE GUIDELINE

Accessory	REQUIRED FOR LOW–AMBIENT COOLING APPLICATIONS (Below 55°F / 12.8°C)	REQUIRED FOR LONG LINE APPLICATIONS*	REQUIRED FOR SEA COAST APPLICATIONS (Within 2 miles / 3.22 km)
Accumulator	Standard	Standard	Standard
Ball Bearing Fan Motor	Yes†	No	No
Compressor Start Assist Capacitor and Relay	Yes	Yes	No
Crankcase Heater	Yes	Yes	No
Evaporator Freeze Thermostat	Yes	No	No
Hard Shutoff TXV	Yes	Yes	No
Isolation Relay	Yes	No	No
Liquid Line Solenoid Valve	No	See Long–Line Application Guideline	No
Motor Master® Control or Low Ambient Switch	Yes	No	No
Support Feet	Recommended	No	Recommended

* For tubing line sets between 80 and 200 ft. (24.38 and 60.96 m) and/or 20 ft. (6.09 m) vertical differential, refer to Residential Split–System Longline Application Guideline.

† Additional requirement for Low–Ambient Controller (full modulation feature) MotorMaster® Control.

Accessory Description and Usage (Listed Alphabetically)

1. Ball-Bearing Fan Motor

A fan motor with ball bearings which permits speed reduction while maintaining bearing lubrication.

Usage Guideline:

Required on all units when using MotorMaster®

2. Compressor Start Assist - Capacitor and Relay

Start capacitor and relay gives a hard boost to compressor motor at each start up.

Usage Guideline:

Required for reciprocating compressors in the following applications:

Long line

Low ambient cooling

Hard shut off expansion valve on indoor coil

Liquid line solenoid on indoor coil

Required for single-phase scroll compressors in the following applications:

Long line

Low ambient cooling

Suggested for all compressors in areas with a history of low voltage problems.

3. Compressor Start Assist — PTC Type

Solid state electrical device which gives a soft boost to the compressor at each start-up.

Usage Guideline:

Suggested in installations with marginal power supply.

4. Crankcase Heater

An electric resistance heater which mounts to the base of the compressor to keep the lubricant warm during off cycles. Improves compressor lubrication on restart and minimizes the chance of liquid slugging.

Usage Guideline:

Required in low ambient cooling applications.

Required in long line applications.

Suggested in all commercial applications.

5. Evaporator Freeze Thermostat

An SPST temperature-actuated switch that stops unit operation when evaporator reaches freeze-up conditions.

Usage Guideline:

Required when low ambient kit has been added.

6. Isolation Relay

An SPDT relay which switches the low-ambient controller out of the outdoor fan motor circuit when the heat pump switches to heating mode.

Usage Guideline:

Required in all heat pumps where low ambient kit has been added.

7. Liquid-Line Solenoid Valve (LLS)

An electrically operated shutoff valve which stops and starts refrigerant liquid flow in response to compressor operation. It is to be installed at the outdoor unit to control refrigerant off cycle migration in the heating mode.

Usage Guideline:

An LLS is required in all long line heat pump applications to control refrigerant off cycle migration in the heating mode. See Long Line Guideline.

8. Low-Ambient Pressure Switch Kit

A long life pressure switch which is mounted to outdoor unit service valve. It is designed to cycle the outdoor fan motor in order to maintain head pressure within normal operating limits. The control will maintain working head pressure at low-ambient temperatures down to 0°F (-18°C) when properly installed.

Usage Guideline:

A Low-Ambient Pressure Switch or MotorMaster® Low-Ambient Controller must be used when cooling operation is used at outdoor temperatures below 55°F (12.8°C).

9. MotorMaster® Low-Ambient Controller

A fan-speed control device activated by a temperature sensor, designed to control condenser fan motor speed in response to the saturated, condensing temperature during operation in cooling mode only. For outdoor temperatures down to -20°F (-28.9°C), it maintains condensing temperature at 100°F ±10°F (37.8°C ± 6.5°C).

Usage Guideline:

A MotorMaster® Low Ambient Controller or Low-Ambient Pressure Switch must be used when cooling operation is used at outdoor temperatures below 55°F (12.8°C).

Suggested for all commercial applications.

10. Outdoor Air Temperature Sensor

Designed for use with Carrier Thermostats listed in this publication. This device enables the thermostat to display the outdoor temperature. This device also is required to enable special thermostat features such as auxiliary heat lock out.

Usage Guideline:

Suggested for all Carrier thermostats listed in this publication.

11. Outdoor Thermostat

An SPDT temperature-actuated switch which turns on supplemental electric heaters when outdoor air temperature drops below a user-selected set point.

Usage Guideline:

Electric supplemental heat applications in non-variable speed indoor units when electric heat staging is desired.

12. Secondary Outdoor Thermostat

An SPDT temperature-actuated switch which turns on third-stage of supplemental electric heaters when outdoor air temperature drops below the second-stage set point.

Usage Guideline:

Outdoor thermostat applications where electric heater is capable of 3-stage operation.

13. Snow Stand Rack

Coated wire rack which supports unit 18 in. (457.2 mm) above mounting pad to allow for drainage from unit base.

Usage Guideline:

Suggested in the following applications:

Heat pump installations in heavy snowfall areas.

Heat pump installations in snow drift locations.

Heat pump installations in areas of prolonged subfreezing temperatures.

All commercial installations.

14. Sound Hood

Wraparound sound reducing cover for the compressor. Reduces the sound level by about 2 dBA.

Usage Guideline:

Suggested when unit is installed closer than 15 ft. (4.577 m) to quiet areas, bedrooms, etc.

Suggested when unit is installed between two houses less than 10 ft. (3.05 m) apart.

15. Thermostatic Expansion Valve (TXV) Bi-Flow

A modulating flow-control valve which meters refrigerant liquid flow rate into the evaporator in response to the superheat of the refrigerant gas leaving the evaporator.

Usage Guideline:

Accessory required to meet AHRI rating and system reliability, where indoor not equipped.

Required in all heat pump applications designed with Puron refrigerant.

16. Time-Delay Relay

An SPST delay relay which briefly continues operation of indoor blower motor to provide additional cooling after the compressor cycles off.

Note: Most indoor unit controls include this feature. For those that do not, use the guideline below.

Usage Guideline:

Accessory required to meet AHRI rating, where indoor not equipped.

ELECTRICAL DATA

UNIT SIZE	V/PH	OPER VOLTS*		COMPR		FAN	MCA	MAX FUSE** or CKT BRK AMPS
		MAX	MIN	LRA	RLA	FLA		
18	208/230/1	253	197	48.0	9.0	0.50	11.8	20
24				62.9	10.9	0.60	14.2	25
30				72.5	13.5	1.40	18.3	30
36				75.0	15.1	1.10	20.0	30
42				105.5	18.1	1.40	24.0	40
48				108.0	19.0	1.40	25.2	40
60				144.2	24.4	1.52	32.0	50

* Permissible limits of the voltage range at which the unit will operate satisfactorily
** Time–Delay fuse.
FLA – Full Load Amps
LRA – Locked Rotor Amps
MCA – Minimum Circuit Amps
RLA – Rated Load Amps
NOTE: Control circuit is 24–V on all units and requires external power source. Copper wire must be used from service disconnect to unit.
All motors/compressors contain internal overload protection.
Complies with 2007 requirements of ASHRAE Standards 90.1

A-WEIGHTED SOUND POWER

UNIT SIZE	STANDARD RATING (dBA)	TYPICAL OCTAVE BAND SPECTRUM (dBA, without tone adjustment)						
		125	250	500	1000	2000	4000	8000
18	69	45	48	56	62	55	53	47
24	76	46	56	59	63	63	60	55
30	77	52	62	67	68	65	62	55
36	77	51	62	66	69	64	61	53
42	76	49	61	63	65	62	60	52
48	79	53	66	69	71	67	64	57
60	73	50	63	62	63	60	58	52

NOTE: Tested in accordance with AHRI Standard 270–08 (not listed in AHRI).

A-WEIGHTED SOUND POWER WITH SOUND HOOD

UNIT SIZE	STANDARD RATING	TYPICAL OCTAVE BAND SPECTRUM (dBA, without tone adjustment)						
		125	250	500	1000	2000	4000	8000
18	68	47	48	56	61	55	52	46
24	74	47	57	59	62	61	58	51
30	77	52	62	67	67	65	62	54
36	76	52	62	66	67	64	60	52
42	74	50	61	63	64	61	58	49
48	79	54	66	69	70	67	64	56
60	73	51	64	62	63	59	56	49

NOTE: Tested in accordance with AHRI Standard 270–08 (not listed in AHRI).

CHARGING SUBCOOLING (TXV-TYPE EXPANSION DEVICE)

UNIT SIZE–SERIES	REQUIRED SUBCOOLING °F (°C)
18	11 (6.1)
24	11 (6.1)
30	10 (5.6)
36	10 (5.6)
42	10 (5.6)
48	14 (7.8)
60	15 (8.3)

HP ONLY REPLACEMENT WITH PISTON INDOORS

When the 25HCE4 is used as a replacement component in a system with a piston fan coil, use the indoor piston size specified below:

UNIT SIZE	PISTON SIZE		
	FB4CNF	FFM	FPMA
18	0.052	0.050	0.050
24	0.057	0.057	0.056
30	0.067	0.070	0.067
36	0.070	0.072	0.069
42	0.078		
48	0.084		
60			

= N/A

DIMENSIONS - ENGLISH

UNIT	SERIES	ELECTRICAL CHARACTERISTICS				A	B	C	D	E	F	G	K	L	M	N	P	OPERATING WEIGHT (lbs)	SHIPPING WEIGHT (lbs)	SHIPPING DIMENSIONS (L x W x H)
25HCE418	0	X	O	O	O	23 1/8"	35 1/4"	3 3/4"	5/8"	4 7/16"	18 1/16"	7 13/16"	2 13/16"	1/2"	11"	15 3/4"	12"	136	166	25 1/4" X 25 1/4" X 40"
25HCE424	0	X	O	O	O	25 3/4"	35 1/4"	3 3/4"	5/8"	4 7/16"	21 1/4"	9 1/8"	2 13/16"	1/2"	12"	13 1/4"	13 1/2"	144	175	27 7/8" X 27 7/8" X 40"
25HCE430	0	X	O	O	O	31 3/16"	31 13/16"	3 3/4"	3/4"	6 9/16"	24 11/16"	9 1/8"	2 15/16"	5/8"	15"	11"	16"	158	180	33 3/8" X 33 3/8" X 36 5/8"
25HCE436	1	X	O	O	O	31 3/16"	28 7/16"	3 3/4"	3/4"	6 9/16"	24 11/16"	9 1/8"	2 15/16"	5/8"	15 3/4"	14"	10 3/4"	170	201	33 3/8" X 33 3/8" X 33 1/4"
25HCE442	0	X	O	O	O	31 3/16"	39 1/8"	3 7/8"	7/8"	6 9/16"	24 11/16"	9 1/8"	2 15/16"	5/8"	15 1/2"	13 1/2"	14"	201	235	33 3/8" X 33 3/8" X 43 1/2"
25HCE448	0	X	O	O	O	31 3/16"	28 7/16"	3 7/8"	7/8"	6 9/16"	24 11/16"	9 1/8"	2 15/16"	5/8"	16 1/2"	11 1/2"	15"	197	232	33 3/8" X 33 3/8" X 33 1/4"
25HCE460	0	X	O	O	O	31 3/16"	31 13/16"	3 7/8"	7/8"	6 9/16"	24 11/16"	9 1/8"	2 15/16"	5/8"	14 3/4"	15 3/4"	16 1/4"	212	248	33 3/8" X 33 3/8" X 36 5/8"
		208-230-1-60	230-1-60	208/230-3-60	460-3-60															

X = YES
O = NO

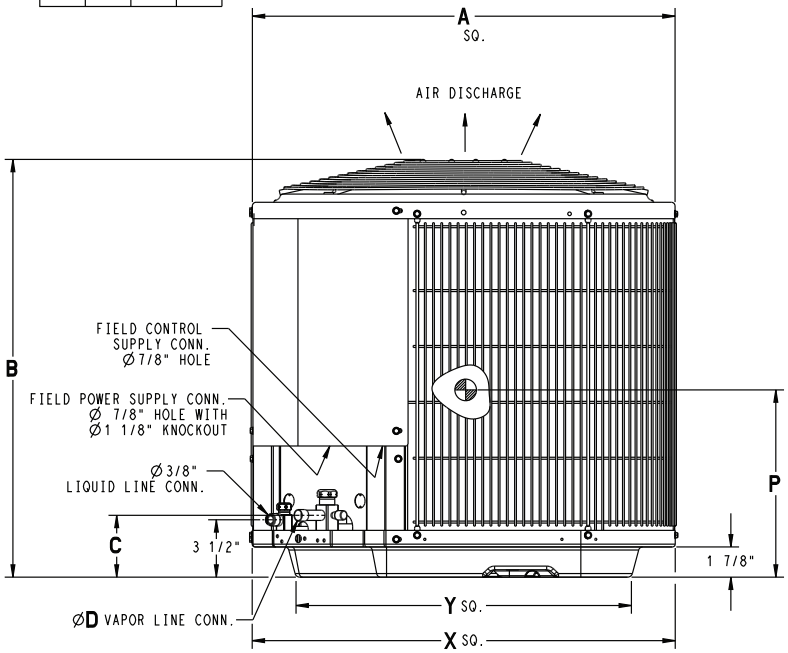

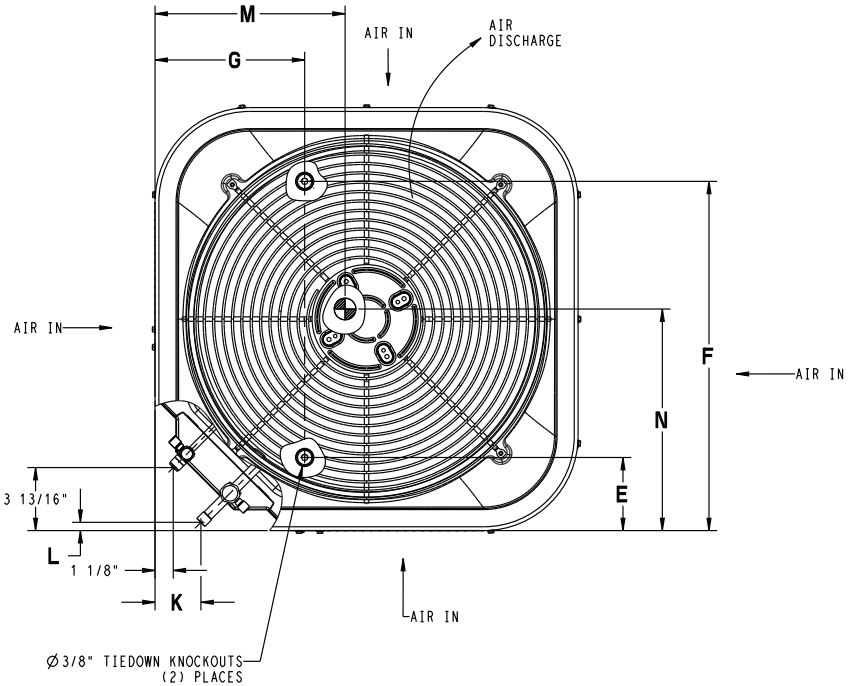

UNIT SIZE	"X" MIN GROUND MOUNTING PAD APPLICATION DIMENSIONS	"Y" MIN ROOF-TOP MOUNTING PAD APPLICATION DIMENSIONS
18	23 1/8"	17 3/4"
24	25 3/4"	20 7/16"
30,36,42,48,60	31 3/16"	23"
-	35"	26 3/4"

When installing, allow sufficient space for airflow clearance, wiring, refrigerant piping, and service. Allow 24 in. (609.6 mm) clearance to service end of unit and 48 in. (1219.2 mm) (above unit. For proper airflow, a 6–in. (152.4 mm) clearance on 1 side of unit and 12–in. (304.8 mm) on all remaining sides must be maintained. Maintain a distance of 24 in. (609.6 mm) between units or 18 in. (457.2 mm) if no overhang within 12 ft. (3.66 m) Position so water, snow, or ice from roof or eaves cannot fall directly on unit.

NOTE: 18" (457.2 mm) clearance option described above is approved for outdoor units with wire grille coil guard only. Units with louver panels require 24" (609.6 mm) between units.

On rooftop applications, locate unit at least 6 in. (152.4 mm) above roof surface.

DIMENSIONS - SI

UNIT	SERIES	ELECTRICAL CHARACTERISTICS				A	B	C	D	E	F	G	K	L	M	N	P	OPERATING WEIGHT (Kgs)	SHIPPING WEIGHT (Kgs)	SHIPPING DIMENSIONS (L x W x H)
25HCE418	0	X	O	O	O	587.4	895.4	95.2	15.9	112.7	458.8	198.4	71.4	12.7	279.4	400.1	304.8	61.7	75.3	641.5 X 641.5 X 1016.9
25HCE424	0	X	O	O	O	654.0	895.4	95.2	15.9	112.7	539.8	231.8	71.4	12.7	304.8	336.6	342.9	65.3	79.4	708.0 X 708.0 X 1016.9
25HCE430	0	X	O	O	O	792.2	808.0	95.2	19.0	166.7	627.1	231.8	74.6	15.9	381.0	279.4	406.4	71.7	81.6	846.6 X 846.6 X 930.6
25HCE436	1	X	O	O	O	792.2	722.3	95.2	19.0	166.7	627.1	231.8	74.6	15.9	400.1	355.6	273.1	77.1	91.2	846.6 X 846.6 X 844.2
25HCE442	0	X	O	O	O	792.2	993.8	98.4	22.2	166.7	627.1	231.8	74.6	15.9	393.7	342.9	355.6	91.2	106.6	846.6 X 846.6 X 1103.3
25HCE448	0	X	O	O	O	792.2	722.3	98.4	22.2	166.7	627.1	231.8	74.6	15.9	419.1	292.1	381.0	89.4	105.2	846.6 X 846.6 X 844.2
25HCE460	0	X	O	O	O	792.2	808.0	98.4	22.2	166.7	627.1	231.8	74.6	15.9	374.7	400.1	412.8	96.2	112.5	846.6 X 846.6 X 930.6
		208-230-1-60	230-1-60	208/230-3-60	460-3-60															

X = YES
O = NO

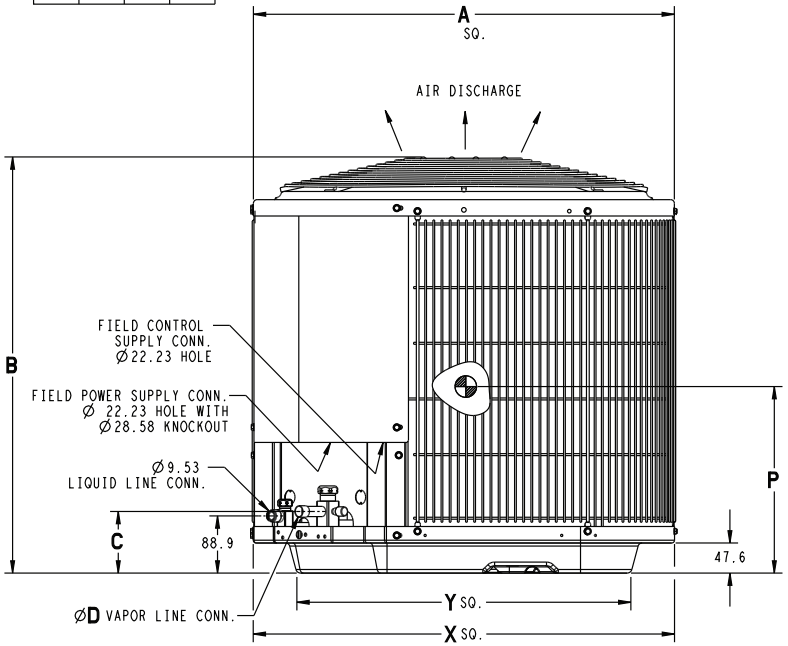

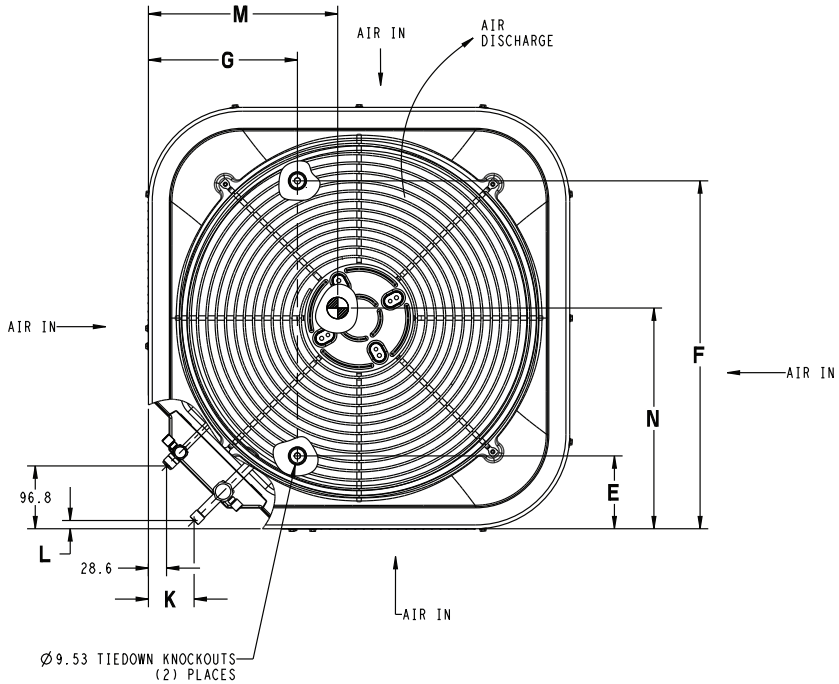

UNIT SIZE	"X" MIN GROUND MOUNTING PAD APPLICATION DIMENSIONS	"Y" MIN ROOF-TOP MOUNTING PAD APPLICATION DIMENSIONS
18	587.4	451.3
24	654.0	518.5
30,36,42,48,60	792.2	583.2
-	889.0	679.7

When installing, allow sufficient space for airflow clearance, wiring, refrigerant piping, and service. Allow 24 in. (609.6 mm) clearance to service end of unit and 48 in. (1219.2 mm) (above unit. For proper airflow, a 6–in. (152.4 mm) clearance on 1 side of unit and 12–in. (304.8 mm) on all remaining sides must be maintained. Maintain a distance of 24 in. (609.6 mm) between units or 18 in. (457.2 mm) if no overhang within 12 ft. (3.66 m) Position so water, snow, or ice from roof or eaves cannot fall directly on unit.

NOTE: 18" (457.2 mm) clearance option described above is approved for outdoor units with wire grille coil guard only. Units with louver panels require 24" (609.6 mm) between units.

On rooftop applications, locate unit at least 6 in. (152.4 mm) above roof surface.

CLEARANCES

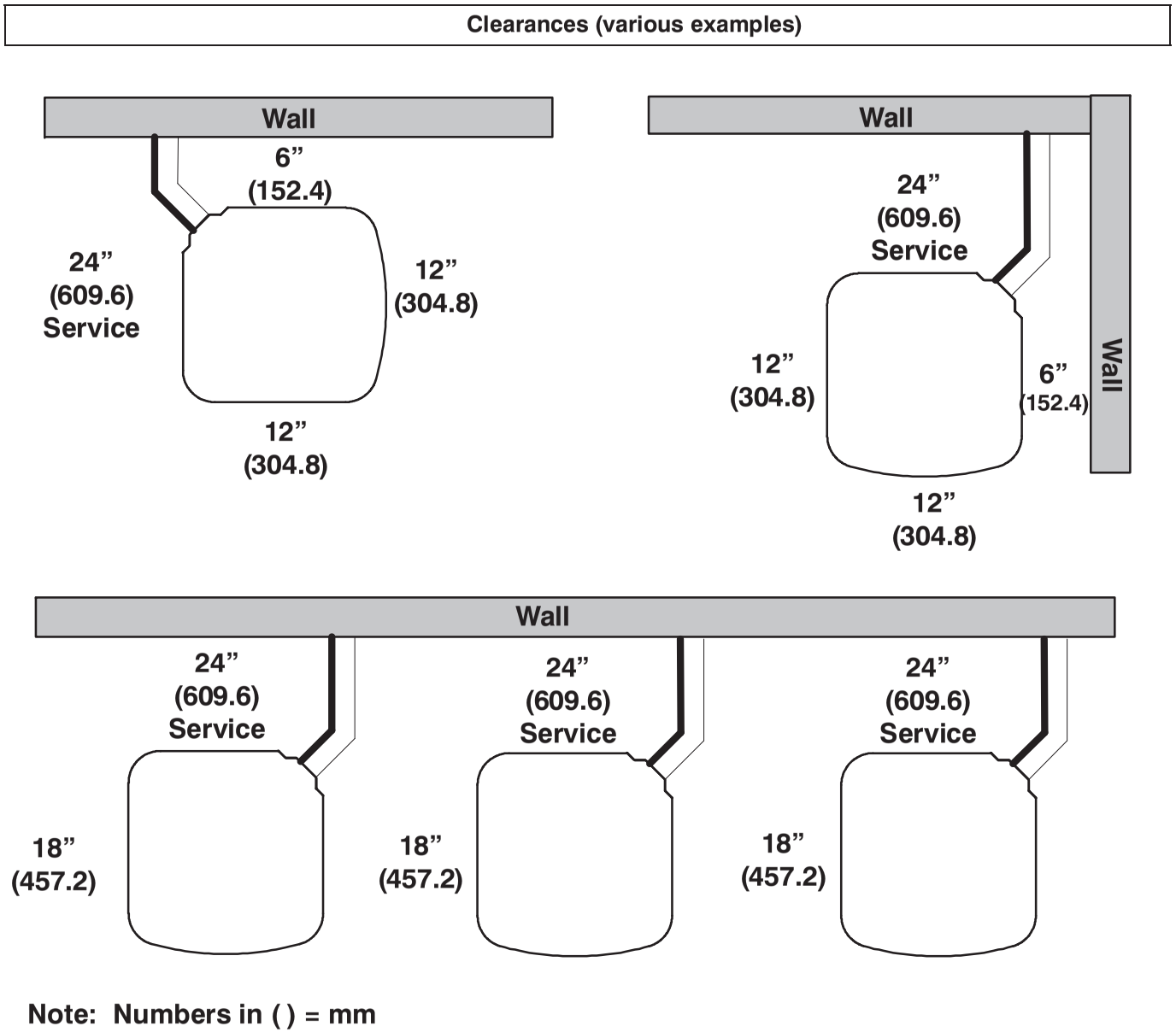

IMPORTANT: When installing multiple units in an alcove, roof well, or partially enclosed area, ensure there is adequate ventilation to prevent re-circulation of discharge air.

BALANCE POINT WORKSHEET

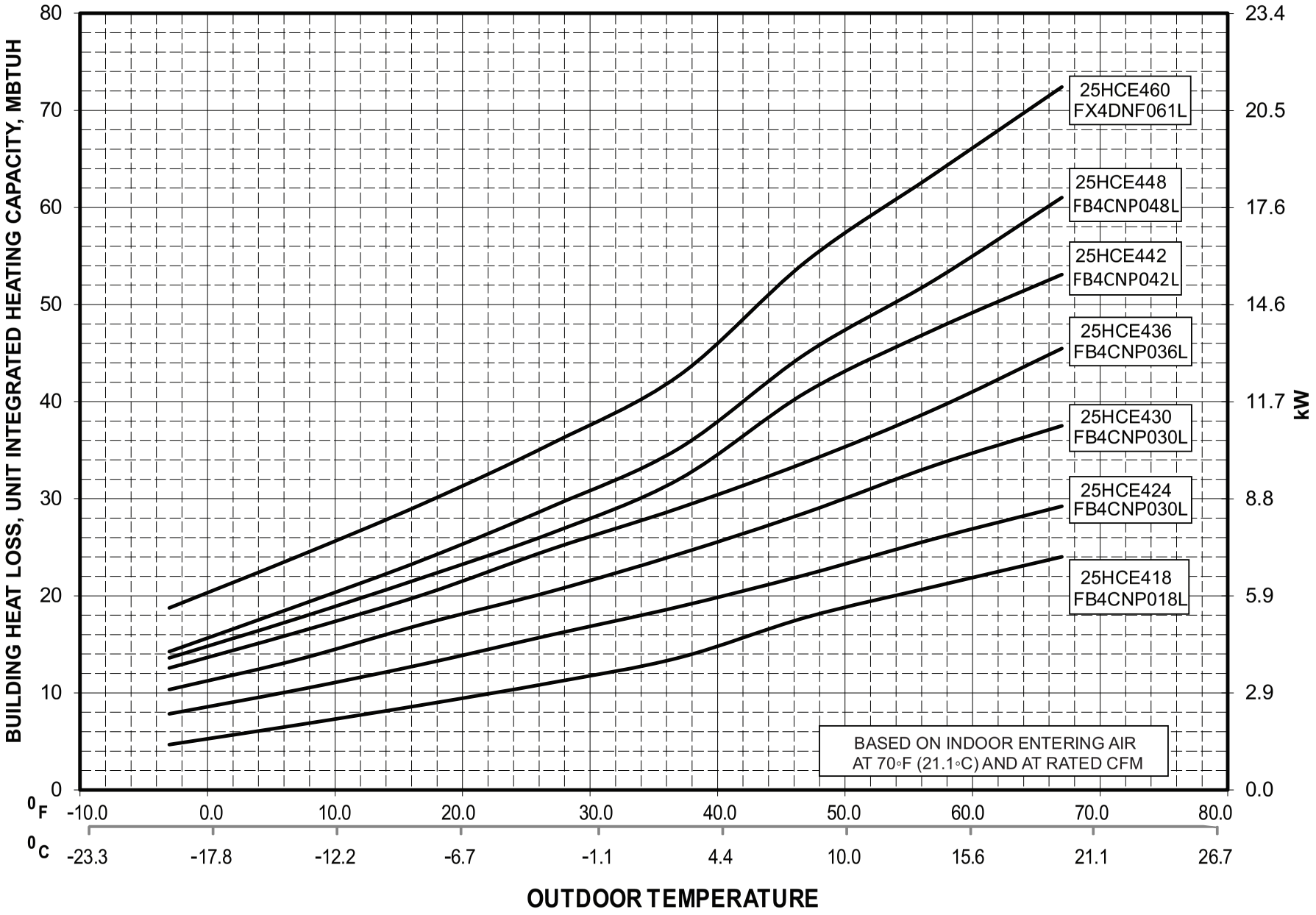

TESTED AHRI COMBINATION RATINGS

NOTE: Ratings contained in this document are subject to change at any time.

For AHRI ratings certificates, please refer to the AHRI directory www.ahridirectory.org

Additional ratings and system combinations can be accessed via the Carrier database at: www.MyCarrierRatings.com

For performance data at specific application &/or design conditions with various indoor unit combinations, the equipment performance calculator can be accessed at : http://rpmob.wrightsoft.com/

Model Number	Indoor Coil Model Number	Cooling Capacity	EER	SEER	High Temp		HSPF	Low Temp	
					E Capacity	E COP		H Capacity	H COP
25HCE418A30**	FB4CNP018L	17,800	11.7	14	17,600	3.72	8.2	10,400	2.40
25HCE424A30**	FB4CNP030L	22,200	11.5	14	22,200	3.84	8.2	13,200	2.54
25HCE430A30**	FB4CNP030L	28,600	11.7	14	28,600	3.62	8.2	17,100	2.44
25HCE436A31**	FB4CNP036L	33,000	11.7	14	33,800	3.62	8.2	21,000	2.40
25HCE442A30**	FB4CNP042L	40,000	11.5	14	41,000	3.62	8.2	25,200	2.50
25HCE448A30**	FB4CNP048L	46,000	11.7	14	45,500	3.64	8.2	27,800	2.56
25HCE460A30**	FX4DN(B,F)061L	57,000	11.7	14	54,500	3.70	8.2	33,000	2.56

* AHRI = Air Conditioning, Heating & Refrigeration Institute

* Ratings are net values reflecting the effects of circulating fan heat. Supplemental electric heat is not included. Ratings are based on:

Cooling Standard: 80°F (27°C) db 67°F (19°C) wb indoor entering air temperature and 95°F (35°C) db air entering outdoor unit.

High−Temp Heating Standard: 70°F (21°C) db indoor entering air temperature and 47°F (8°C) db 43°F (6°C) wb air entering outdoor unit.

Low−Temp Heating Standard: 70°F (21°C) db indoor entering air temperature and 17°F (−8°C) db 15°F (−9°C) wb air entering outdoor unit.

COP — Coefficient of Performance

EER — Energy Efficiency Ratio

HSPF — Heating Seasonal Performance Factor

SEER — Seasonal Energy Efficiency Ratio

DETAILED COOLING CAPACITIES#

EVAPORATOR AIR		CONDENSER ENTERING AIR TEMPERATURES °F (°C)																	
		75 (23.9)			85 (29.4)			95 (35)			105 (40.6)			115 (46.1)			125 (51.7)		
CFM	EWB °F (°C)	Capacity MBtuh		Total System KW**	Capacity MBtuh		Total System KW**	Capacity MBtuh		Total System KW**	Capacity MBtuh		Total System KW**	Capacity MBtuh		Total System KW**	Capacity MBtuh		Total System KW**
		Total	Sens‡		Total	Sens‡		Total	Sens‡		Total	Sens‡		Total	Sens‡		Total	Sens‡	
25HCE418 Outdoor Section With FB4CNP018L Indoor Section																			
525	72 (22.2)	21.43	10.44	1.20	20.38	10.06	1.36	19.27	9.66	1.54	18.10	9.26	1.74	16.86	8.83	1.97	15.56	8.39	2.22
	67 (19.4)	19.44	12.77	1.19	18.48	12.39	1.36	17.47	11.99	1.53	16.40	11.58	1.73	15.26	11.15	1.96	14.06	10.69	2.21
	63 (17.2)††	17.99	12.27	1.19	17.10	11.90	1.35	16.16	11.50	1.53	15.16	11.08	1.73	14.10	10.65	1.95	12.98	10.19	2.20
	62 (16.7)	17.64	15.03	1.19	16.78	14.64	1.35	15.88	14.22	1.53	14.93	13.76	1.73	14.00	14.00	1.95	13.10	13.10	2.20
	57 (13.9)	16.97	16.97	1.19	16.30	16.30	1.35	15.58	15.58	1.52	14.81	14.81	1.73	13.98	13.98	1.95	13.08	13.08	2.20
600	72 (22.2)	21.88	10.96	1.21	20.77	10.58	1.38	19.62	10.18	1.56	18.40	9.76	1.76	17.12	9.33	1.98	15.77	8.88	2.23
	67 (19.4)	19.86	13.61	1.20	18.86	13.22	1.37	17.80	12.82	1.55	16.69	12.39	1.75	15.51	11.95	1.97	14.27	11.48	2.22
	63 (17.2)††	18.40	13.06	1.20	17.47	12.67	1.36	16.49	12.27	1.54	15.44	11.84	1.74	14.34	11.39	1.97	13.19	10.92	2.21
	62 (16.7)	18.08	16.13	1.20	17.20	15.71	1.36	16.27	16.27	1.54	15.43	15.43	1.74	14.54	14.54	1.97	13.59	13.59	2.22
	57 (13.9)	17.73	17.73	1.20	17.01	17.01	1.36	16.24	16.24	1.54	15.41	15.41	1.74	14.52	14.52	1.97	13.57	13.57	2.22
675	72 (22.2)	22.22	11.46	1.22	21.08	11.07	1.39	19.88	10.66	1.57	18.63	10.24	1.77	17.31	9.80	2.00	15.92	9.35	2.25
	67 (19.4)	20.19	14.41	1.22	19.15	14.01	1.38	18.06	13.60	1.56	16.91	13.16	1.76	15.70	12.71	1.99	14.44	12.22	2.23
	63 (17.2)††	18.71	13.81	1.21	17.75	13.41	1.38	16.74	12.99	1.56	15.66	12.55	1.75	14.53	12.09	1.98	13.35	11.59	2.23
	62 (16.7)	18.48	17.11	1.21	17.63	17.63	1.38	16.80	16.80	1.56	15.93	15.93	1.76	14.99	14.99	1.98	13.99	13.99	2.23
	57 (13.9)	18.36	18.36	1.21	17.60	17.60	1.38	16.78	16.78	1.56	15.91	15.91	1.75	14.97	14.97	1.98	13.97	13.97	2.23

EVAPORATOR AIR		CONDENSER ENTERING AIR TEMPERATURES °F (°C)																	
		75 (23.9)			85 (29.4)			95 (35)			105 (40.6)			115 (46.1)			125 (51.7)		
CFM	EWB °F (°C)	Capacity MBtuh		Total System KW**	Capacity MBtuh		Total System KW**	Capacity MBtuh		Total System KW**	Capacity MBtuh		Total System KW**	Capacity MBtuh		Total System KW**	Capacity MBtuh		Total System KW**
		Total	Sens‡		Total	Sens‡		Total	Sens‡		Total	Sens‡		Total	Sens‡		Total	Sens‡	
25HCE424 Outdoor Section With FB4CNP030L Indoor Section																			
700	72 (22.2)	26.47	13.51	1.53	25.28	13.08	1.71	24.03	12.62	1.91	22.72	12.15	2.14	21.30	11.65	2.41	19.77	11.11	2.72
	67 (19.4)	24.06	16.68	1.53	22.96	16.24	1.71	21.82	15.78	1.91	20.62	15.31	2.15	19.33	14.80	2.42	17.93	14.25	2.72
	63 (17.2)††	22.32	16.04	1.53	21.30	15.60	1.72	20.23	15.14	1.92	19.11	14.66	2.16	17.91	14.15	2.42	16.62	13.60	2.73
	62 (16.7)	21.92	19.75	1.53	20.94	19.28	1.72	19.93	18.78	1.92	18.88	18.78	2.16	17.88	17.88	2.42	16.83	16.83	2.73
	57 (13.9)	21.31	21.31	1.54	20.52	20.52	1.72	19.70	19.70	1.92	18.81	18.81	2.16	17.86	17.86	2.42	16.81	16.81	2.73
800	72 (22.2)	26.97	14.20	1.55	25.73	13.76	1.72	24.44	13.30	1.92	23.07	12.82	2.16	21.60	12.31	2.43	20.01	11.76	2.74
	67 (19.4)	24.53	17.79	1.55	23.38	17.34	1.73	22.20	16.87	1.93	20.95	16.38	2.16	19.61	15.86	2.43	18.18	15.29	2.74
	63 (17.2)††	22.77	17.07	1.55	21.70	16.62	1.73	20.60	16.15	1.94	19.43	15.65	2.17	18.19	15.13	2.44	16.86	14.56	2.75
	62 (16.7)	22.45	21.17	1.55	21.45	21.27	1.73	20.50	20.50	1.94	19.55	19.55	2.17	18.53	18.53	2.44	17.41	17.41	2.74
	57 (13.9)	22.20	22.20	1.55	21.35	21.35	1.73	20.47	20.47	1.94	19.53	19.53	2.17	18.51	18.51	2.44	17.39	17.39	2.74
900	72 (22.2)	27.35	14.86	1.56	26.08	14.41	1.74	24.73	13.94	1.94	23.33	13.46	2.17	21.82	12.94	2.44	20.18	12.38	2.75
	67 (19.4)	24.89	18.85	1.57	23.71	18.38	1.75	22.49	17.91	1.95	21.20	17.40	2.18	19.84	16.86	2.45	18.37	16.26	2.76
	63 (17.2)††	23.12	18.05	1.57	22.02	17.59	1.75	20.88	17.10	1.96	19.68	16.59	2.19	18.41	16.05	2.46	17.05	15.45	2.77
	62 (16.7)	22.97	22.97	1.57	22.08	22.08	1.75	21.14	21.14	1.95	20.14	20.14	2.19	19.07	19.07	2.45	17.88	17.88	2.76
	57 (13.9)	22.94	22.94	1.57	22.05	22.05	1.75	21.11	21.11	1.95	20.12	20.12	2.19	19.04	19.04	2.45	17.86	17.86	2.76

EVAPORATOR AIR		CONDENSER ENTERING AIR TEMPERATURES °F (°C)																	
		75 (23.9)			85 (29.4)			95 (35)			105 (40.6)			115 (46.1)			125 (51.7)		
CFM	EWB °F (°C)	Capacity MBtuh		Total System KW**	Capacity MBtuh		Total System KW**	Capacity MBtuh		Total System KW**	Capacity MBtuh		Total System KW**	Capacity MBtuh		Total System KW**	Capacity MBtuh		Total System KW**
		Total	Sens‡		Total	Sens‡		Total	Sens‡		Total	Sens‡		Total	Sens‡		Total	Sens‡	
25HCE430 Outdoor Section With FB4CNP030L Indoor Section																			
875	72 (22.2)	33.97	17.32	1.97	32.47	16.75	2.17	30.87	16.16	2.40	29.15	15.54	2.67	27.30	14.87	2.98	25.29	14.15	3.33
	67 (19.4)	30.80	21.30	1.97	29.42	20.72	2.17	27.96	20.13	2.40	26.39	19.50	2.67	24.69	18.82	2.98	22.86	18.10	3.32
	63 (17.2)††	28.51	20.46	1.97	27.22	19.89	2.17	25.86	19.29	2.41	24.39	18.66	2.67	22.82	17.98	2.97	21.12	17.25	3.32
	62 (16.7)	27.99	25.15	1.97	26.74	24.55	2.17	25.44	23.90	2.41	24.07	23.17	2.67	22.67	22.67	2.97	21.30	21.30	3.32
	57 (13.9)	27.05	27.05	1.97	26.06	26.06	2.18	25.01	25.01	2.41	23.88	23.88	2.67	22.64	22.64	2.97	21.27	21.27	3.32
1050	72 (22.2)	34.85	18.48	2.00	33.25	17.90	2.21	31.57	17.30	2.44	29.76	16.66	2.71	27.81	15.97	3.02	25.71	15.24	3.37
	67 (19.4)	31.61	23.17	2.01	30.15	22.59	2.21	28.60	21.97	2.44	26.95	21.32	2.71	25.18	20.61	3.02	23.27	19.84	3.36
	63 (17.2)††	29.28	22.21	2.01	27.91	21.62	2.21	26.47	21.00	2.45	24.94	20.34	2.71	23.29	19.63	3.01	21.52	18.86	3.36
	62 (16.7)	28.88	27.53	2.01	27.62	27.37	2.21	26.36	26.36	2.45	25.12	25.12	2.71	23.77	23.77	3.01	22.28	22.28	3.36
	57 (13.9)	28.55	28.55	2.01	27.48	27.48	2.21	26.33	26.33	2.45	25.09	25.09	2.71	23.74	23.74	3.01	22.26	22.26	3.36
1125	72 (22.2)	35.15	18.97	2.02	33.53	18.39	2.23	31.81	17.78	2.46	29.96	17.13	2.73	27.99	16.44	3.03	25.85	15.70	3.38
	67 (19.4)	31.89	23.96	2.02	30.39	23.37	2.23	28.82	22.74	2.46	27.14	22.07	2.73	25.34	21.35	3.03	23.41	20.56	3.38
	63 (17.2)††	29.55	22.94	2.03	28.15	22.34	2.23	26.69	21.71	2.46	25.12	21.03	2.73	23.45	20.30	3.03	21.66	19.51	3.38
	62 (16.7)	29.18	29.18	2.03	28.02	28.02	2.23	26.83	26.83	2.46	25.55	25.55	2.73	24.15	24.15	3.03	22.63	22.63	3.38
	57 (13.9)	29.10	29.10	2.03	27.98	27.98	2.23	26.80	26.80	2.46	25.52	25.52	2.73	24.13	24.13	3.03	22.60	22.60	3.38

See notes on page 16

DETAILED COOLING CAPACITIES# CONTINUED

EVAPORATOR AIR		CONDENSER ENTERING AIR TEMPERATURES °F (°C)																	
		75 (23.9)			85 (29.4)			95 (35)			105 (40.6)			115 (46.1)			125 (51.7)		
CFM	EWB °F (°C)	Capacity MBtuh		Total System KW**	Capacity MBtuh		Total System KW**	Capacity MBtuh		Total System KW**	Capacity MBtuh		Total System KW**	Capacity MBtuh		Total System KW**	Capacity MBtuh		Total System KW**
		Total	Sens‡		Total	Sens‡		Total	Sens‡		Total	Sens‡		Total	Sens‡		Total	Sens‡	
25HCE436 Outdoor Section With FB4CNP036L Indoor Section																			
1050	72 (22.2)	39.42	20.36	2.23	37.61	19.67	2.50	35.70	18.96	2.79	33.63	18.20	3.10	31.37	17.37	3.46	28.97	16.51	3.85
	67 (19.4)	35.87	25.19	2.24	34.23	24.50	2.50	32.48	23.78	2.78	30.59	23.01	3.09	28.52	22.17	3.44	26.33	21.29	3.84
	63 (17.2)††	33.28	24.23	2.25	31.76	23.54	2.50	30.14	22.82	2.77	28.38	22.05	3.08	26.45	21.21	3.43	24.41	20.32	3.84
	62 (16.7)	32.68	29.85	2.25	31.22	29.12	2.50	29.67	28.32	2.77	28.03	27.40	3.08	26.31	26.31	3.43	24.65	24.65	3.84
	57 (13.9)	31.63	31.63	2.26	30.46	30.46	2.50	29.20	29.20	2.77	27.82	27.82	3.08	26.28	26.28	3.43	24.62	24.62	3.84
1200	72 (22.2)	40.13	21.34	2.27	38.25	20.63	2.54	36.25	19.90	2.83	34.10	19.12	3.14	31.76	18.28	3.50	29.28	17.40	3.90
	67 (19.4)	36.53	26.77	2.28	34.82	26.07	2.54	33.00	25.34	2.82	31.03	24.54	3.13	28.88	23.67	3.49	26.62	22.75	3.89
	63 (17.2)††	33.92	25.70	2.29	32.33	25.00	2.54	30.64	24.26	2.82	28.81	23.47	3.13	26.81	22.59	3.48	24.71	21.66	3.88
	62 (16.7)	33.39	31.85	2.29	31.89	31.02	2.54	30.31	30.31	2.82	28.80	28.80	3.12	27.16	27.16	3.48	25.40	25.40	3.88
	57 (13.9)	32.83	32.83	2.29	31.58	31.58	2.54	30.24	30.24	2.82	28.77	28.77	3.12	27.13	27.13	3.48	25.37	25.37	3.88
1350	72 (22.2)	40.68	22.25	2.31	38.72	21.53	2.58	36.66	20.80	2.87	34.45	20.01	3.19	32.03	19.15	3.54	29.50	18.26	3.94
	67 (19.4)	37.04	28.29	2.32	35.25	27.57	2.58	33.37	26.81	2.86	31.35	25.98	3.17	29.14	25.07	3.53	26.85	24.10	3.93
	63 (17.2)††	34.40	27.11	2.33	32.75	26.38	2.58	31.00	25.62	2.86	29.12	24.79	3.17	27.07	23.87	3.52	24.93	22.89	3.92
	62 (16.7)	33.95	33.95	2.33	32.55	32.55	2.58	31.13	31.13	2.86	29.57	29.57	3.17	27.85	27.85	3.52	26.00	26.00	3.93
	57 (13.9)	33.84	33.84	2.33	32.51	32.51	2.58	31.10	31.10	2.86	29.54	29.54	3.17	27.82	27.82	3.52	25.98	25.98	3.93

EVAPORATOR AIR		CONDENSER ENTERING AIR TEMPERATURES °F (°C)																	
		75 (23.9)			85 (29.4)			95 (35)			105 (40.6)			115 (46.1)			125 (51.7)		
CFM	EWB °F (°C)	Capacity MBtuh		Total System KW**	Capacity MBtuh		Total System KW**	Capacity MBtuh		Total System KW**	Capacity MBtuh		Total System KW**	Capacity MBtuh		Total System KW**	Capacity MBtuh		Total System KW**
		Total	Sens‡		Total	Sens‡		Total	Sens‡		Total	Sens‡		Total	Sens‡		Total	Sens‡	
25HCE442 Outdoor Section With FB4CNP042L Indoor Section																			
1225	72 (22.2)	48.18	24.31	2.78	46.14	23.54	3.12	43.91	22.72	3.47	41.39	21.79	3.89	38.48	20.75	4.38	35.14	19.57	4.98
	67 (19.4)	43.90	29.85	2.81	42.03	29.07	3.13	40.00	28.24	3.48	37.70	27.31	3.88	35.04	26.26	4.38	31.98	25.05	5.00
	63 (17.2)††	40.78	28.76	2.83	39.02	27.98	3.14	37.15	27.15	3.48	35.01	26.22	3.88	32.54	25.16	4.38	29.68	23.95	5.01
	62 (16.7)	40.02	35.22	2.83	38.32	34.41	3.14	36.51	33.54	3.48	34.48	32.52	3.88	32.15	32.15	4.38	29.82	29.82	5.01
	57 (13.9)	38.47	38.47	2.84	37.12	37.12	3.14	35.68	35.68	3.48	34.03	34.03	3.88	32.08	32.08	4.38	29.78	29.78	5.01
1400	72 (22.2)	49.11	25.48	2.81	46.98	24.70	3.15	44.64	23.85	3.51	42.03	22.91	3.92	39.00	21.85	4.41	35.57	20.66	5.02
	67 (19.4)	44.77	31.73	2.84	42.82	30.94	3.17	40.70	30.10	3.51	38.30	29.14	3.92	35.55	28.06	4.42	32.39	26.81	5.03
	63 (17.2)††	41.63	30.52	2.86	39.80	29.72	3.17	37.83	28.87	3.52	35.61	27.92	3.92	33.04	26.83	4.42	30.10	25.58	5.04
	62 (16.7)	40.95	37.70	2.86	39.20	36.82	3.18	37.36	35.82	3.52	35.36	35.36	3.92	33.27	33.27	4.42	30.82	30.82	5.04
	57 (13.9)	40.07	40.07	2.87	38.63	38.63	3.18	37.09	37.09	3.52	35.31	35.31	3.92	33.23	33.23	4.42	30.78	30.78	5.04
1575	72 (22.2)	49.81	26.57	2.84	47.60	25.78	3.18	45.20	24.93	3.54	42.49	23.97	3.96	39.38	22.90	4.44	35.86	21.70	5.05
	67 (19.4)	45.44	33.53	2.87	43.41	32.72	3.20	41.22	31.85	3.55	38.75	30.88	3.96	35.92	29.75	4.45	32.71	28.46	5.06
	63 (17.2)††	42.28	32.19	2.89	40.38	31.38	3.21	38.36	30.51	3.55	36.06	29.53	3.96	33.43	28.40	4.45	30.42	27.09	5.08
	62 (16.7)	41.76	39.89	2.89	39.97	39.97	3.21	38.30	38.30	3.55	36.41	36.41	3.96	34.21	34.21	4.45	31.64	31.64	5.07
	57 (13.9)	41.40	41.40	2.90	39.89	39.89	3.21	38.25	38.25	3.55	36.36	36.36	3.96	34.17	34.17	4.45	31.60	31.60	5.07

EVAPORATOR AIR		CONDENSER ENTERING AIR TEMPERATURES °F (°C)																	
		75 (23.9)			85 (29.4)			95 (35)			105 (40.6)			115 (46.1)			125 (51.7)		
CFM	EWB °F (°C)	Capacity MBtuh		Total System KW**	Capacity MBtuh		Total System KW**	Capacity MBtuh		Total System KW**	Capacity MBtuh		Total System KW**	Capacity MBtuh		Total System KW**	Capacity MBtuh		Total System KW**
		Total	Sens‡		Total	Sens‡		Total	Sens‡		Total	Sens‡		Total	Sens‡		Total	Sens‡	
25HCE448 Outdoor Section With FB4CNP048L Indoor Section																			
1400	72 (22.2)	55.75	28.05	3.23	53.27	27.12	3.59	50.55	26.11	3.96	47.46	24.99	4.37	44.01	23.75	4.83	40.13	22.38	5.35
	67 (19.4)	50.68	34.45	3.22	48.45	33.53	3.57	46.00	32.52	3.93	43.23	31.42	4.34	40.10	30.17	4.80	36.59	28.79	5.33
	63 (17.2)††	46.99	33.15	3.22	44.92	32.23	3.55	42.67	31.23	3.91	40.12	30.14	4.31	37.25	28.91	4.78	34.00	27.52	5.32
	62 (16.7)	46.10	40.65	3.21	44.11	39.69	3.55	41.94	38.63	3.91	39.54	37.40	4.31	36.87	36.87	4.77	34.21	34.21	5.32
	57 (13.9)	44.33	44.33	3.21	42.76	42.76	3.54	41.05	41.05	3.90	39.07	39.07	4.30	36.80	36.80	4.77	34.17	34.17	5.32
1600	72 (22.2)	56.80	29.37	3.28	54.22	28.42	3.64	51.35	27.39	4.01	48.15	26.25	4.42	44.55	24.98	4.88	40.56	23.60	5.40
	67 (19.4)	51.68	36.59	3.28	49.35	35.66	3.62	46.77	34.62	3.99	43.87	33.48	4.39	40.64	32.20	4.85	37.01	30.76	5.38
	63 (17.2)††	47.95	35.15	3.27	45.79	34.21	3.61	43.42	33.18	3.96	40.77	32.06	4.37	37.78	30.79	4.83	34.43	29.35	5.37
	62 (16.7)	47.16	43.44	3.27	45.10	42.39	3.60	42.90	41.17	3.96	40.54	40.54	4.37	38.10	38.10	4.83	35.30	35.30	5.38
	57 (13.9)	46.14	46.14	3.26	44.46	44.46	3.60	42.61	42.61	3.96	40.49	40.49	4.37	38.06	38.06	4.83	35.26	35.26	5.37
1800	72 (22.2)	57.65	30.65	3.33	54.95	29.68	3.69	52.00	28.64	4.06	48.67	27.48	4.47	44.97	26.19	4.93	40.86	24.79	5.45
	67 (19.4)	52.48	38.69	3.33	50.04	37.72	3.67	47.37	36.65	4.04	44.38	35.48	4.45	41.04	34.15	4.91	37.34	32.64	5.44
	63 (17.2)††	48.72	37.10	3.32	46.47	36.13	3.66	44.02	35.07	4.02	41.28	33.91	4.42	38.20	32.58	4.88	34.78	31.07	5.42
	62 (16.7)	48.09	45.92	3.32	45.99	45.99	3.66	43.96	43.96	4.02	41.71	41.71	4.43	39.13	39.13	4.89	36.17	36.17	5.43
	57 (13.9)	47.65	47.65	3.32	45.88	45.88	3.66	43.91	43.91	4.02	41.66	41.66	4.43	39.09	39.09	4.89	36.13	36.13	5.43

See notes on page 16

DETAILED COOLING CAPACITIES# CONTINUED

EVAPORATOR AIR		CONDENSER ENTERING AIR TEMPERATURES °F (°C)																	
		75 (23.9)			85 (29.4)			95 (35)			105 (40.6)			115 (46.1)			125 (51.7)		
CFM	EWB °F (°C)	Capacity MBtuh		Total System KW**	Capacity MBtuh		Total System KW**	Capacity MBtuh		Total System KW**	Capacity MBtuh		Total System KW**	Capacity MBtuh		Total System KW**	Capacity MBtuh		Total System KW**
		Total	Sens‡		Total	Sens‡		Total	Sens‡		Total	Sens‡		Total	Sens‡		Total	Sens‡	
25HCE460 Outdoor Section With FX4DN(B,F)061L Indoor Section																			
1750	72 (22.2)	64.47	36.36	3.53	61.69	35.21	3.88	58.75	34.01	4.30	55.61	32.74	4.78	52.18	31.36	5.34	48.43	29.90	5.99
	67 (19.4)	58.76	44.97	3.50	56.25	43.82	3.86	53.58	42.62	4.27	50.71	41.34	4.76	47.58	39.96	5.32	44.10	38.44	5.96
	63 (17.2)††	54.60	43.31	3.48	52.27	42.16	3.84	49.79	40.96	4.25	47.13	39.68	4.74	44.21	38.28	5.29	40.98	36.76	5.94
	62 (16.7)	53.59	53.34	3.48	51.34	52.14	3.84	48.98	50.87	4.25	46.43	49.42	4.73	43.81	43.81	5.29	41.19	41.19	5.94
	57 (13.9)	51.87	51.87	3.47	50.08	50.08	3.83	48.17	48.17	4.25	46.08	46.08	4.73	43.74	43.74	5.29	41.14	41.14	5.94
2000	72 (22.2)	65.61	38.13	3.59	62.71	36.95	3.95	59.66	35.74	4.37	56.39	34.44	4.85	52.83	33.04	5.41	48.97	31.55	6.06
	67 (19.4)	59.86	47.88	3.57	57.21	46.69	3.92	54.43	45.47	4.34	51.45	44.16	4.82	48.19	42.72	5.38	44.64	41.17	6.03
	63 (17.2)††	55.66	46.01	3.55	53.22	44.83	3.91	50.64	43.61	4.32	47.87	42.29	4.80	44.85	40.86	5.36	41.52	39.29	6.01
	62 (16.7)	54.79	57.14	3.55	52.47	55.78	3.90	50.08	50.08	4.32	47.80	47.80	4.80	45.32	45.32	5.36	42.54	42.54	6.02
	57 (13.9)	53.97	53.97	3.54	52.05	52.05	3.90	49.99	49.99	4.32	47.74	47.74	4.80	45.26	45.26	5.36	42.49	42.49	6.02
2250	72 (22.2)	66.47	39.80	3.66	63.48	38.61	4.02	60.32	37.37	4.43	56.96	36.06	4.91	53.30	34.64	5.47	49.33	33.13	6.12
	67 (19.4)	60.67	50.65	3.63	57.94	49.44	3.99	55.07	48.18	4.40	51.99	46.83	4.89	48.67	45.37	5.45	45.03	43.74	6.09
	63 (17.2)††	56.46	48.58	3.61	53.93	47.38	3.97	51.26	46.11	4.38	48.41	44.76	4.87	45.32	43.28	5.43	41.91	41.63	6.07
	62 (16.7)	55.83	55.83	3.61	53.75	53.75	3.97	51.56	51.56	4.39	49.17	49.17	4.87	46.57	46.57	5.44	43.63	43.63	6.09
	57 (13.9)	55.71	55.71	3.61	53.68	53.68	3.97	51.49	51.49	4.39	49.12	49.12	4.87	46.49	46.49	5.43	43.58	43.58	6.09

† Total and sensible capacities are net capacities. Blower motor heat has been subtracted.
‡ Sensible capacities shown are based on 80°F (27°C) entering air at the indoor coil. For sensible capacities at other than 80°F (27°C), deduct 835 Btuh (245 kW) per 1000 CFM (480 L/S) of indoor coil air for each degree below 80°F (27°C), or add 835 Btuh (245 kW) per 1000 CFM (480 L/S) of indoor coil air per degree above 80°F (27°C).
# Detailed cooling capacities are based on indoor and outdoor unit at the same elevation per AHRI standard 210/240–2008. If additional tubing length and/or indoor unit is located above outdoor unit, a slight variation in capacity may occur.
** Sys. kw is total of indoor and outdoor unit kilowatts.
†† At TVA rating indoor condition (75°F edb/63°F ewb). All other indoor air temperatures are at 80°F edb.
NOTE: When the required data falls between the published data, interpolation may be performed. Extrapolation is not an acceptable practice.
EWB — Entering Wet Bulb

HEAT PUMP HEATING PERFORMANCE

INDOOR AIR		OUTDOOR COIL ENTERING AIR TEMPERATURES ° F (° C)																							
		-3 (19.4)			7 (-13.9)			17 (-8.3)			27 (-2.i8)			37 (2.8)			47 (8.3)			57 (13.9)			67 (19.4)		
EDB ° F (° C)	CFM	Capacity MBtuh		Total Sys-tem KW	Capacity MBtuh		Total Sys-tem KW	Capacity MBtuh		Total Sys-tem KW	Capacity MBtuh		Total Sys-tem KW	Capacity MBtuh		Total Sys-tem KW	Capacity MBtuh		Total Sys-tem KW	Capacity MBtuh		Total Sys-tem KW	Capacity MBtuh		Total Sys-tem KW
		Total	Integ		Total	Integ		Total	Integ		Total	Integ		Total	Integ		Total	Integ		Total	Integ		Total	Integ	
25HCE418 Outdoor Section With FB4CNP018L Indoor Section																									
65	525	5.26	4.84	1.03	7.45	6.84	1.09	9.80	8.94	1.14	12.54	11.14	1.21	15.07	13.71	1.27	17.87	17.87	1.35	21.00	21.00	1.44	24.19	24.19	1.53
	600	5.36	4.93	1.04	7.57	6.95	1.09	9.96	9.08	1.13	12.70	11.28	1.19	15.26	13.89	1.24	18.13	18.13	1.31	21.35	21.35	1.40	24.32	24.32	1.47
	675	5.44	5.01	1.04	7.66	7.04	1.09	10.09	9.20	1.13	12.83	11.40	1.18	15.43	14.04	1.23	18.33	18.33	1.29	21.54	21.54	1.37	24.32	24.32	1.43
70	525	4.98	4.58	1.08	7.15	6.57	1.14	9.49	8.65	1.20	12.28	10.90	1.27	14.78	13.45	1.33	17.54	17.54	1.41	20.61	20.61	1.51	23.84	23.84	1.61
	600	5.08	4.67	1.08	7.27	6.68	1.14	9.64	8.79	1.19	12.45	11.05	1.25	14.98	13.63	1.31	17.80	17.80	1.38	20.95	20.95	1.47	24.01	24.01	1.55
	675	5.16	4.75	1.09	7.38	6.78	1.14	9.77	8.91	1.18	12.58	11.17	1.24	15.14	13.78	1.29	18.01	18.01	1.36	21.21	21.21	1.44	24.05	24.05	1.50
75	525	4.65	4.28	1.13	6.83	6.27	1.19	9.15	8.35	1.25	11.98	10.64	1.33	14.49	13.19	1.40	17.21	17.21	1.48	20.22	20.22	1.58	23.47	23.47	1.69
	600	4.74	4.36	1.13	6.95	6.39	1.19	9.31	8.49	1.24	12.16	10.80	1.31	14.69	13.37	1.37	17.46	17.46	1.45	20.55	20.55	1.54	23.68	23.68	1.62
	675	4.84	4.45	1.14	7.05	6.48	1.19	9.44	8.61	1.24	12.30	10.93	1.30	14.86	13.52	1.36	17.67	17.67	1.42	20.82	20.82	1.51	23.75	23.75	1.58
25HCE424 Outdoor Section With FB4CNP030L Indoor Section																									
65	700	8.09	7.45	1.53	10.51	9.65	1.59	13.25	12.08	1.65	16.10	14.30	1.71	18.99	17.28	1.79	22.27	22.27	1.88	26.02	26.02	1.98	29.55	29.55	2.06
	800	8.23	7.57	1.54	10.66	9.80	1.58	13.63	12.43	1.64	16.28	14.46	1.70	19.22	17.49	1.76	22.55	22.55	1.84	26.19	26.19	1.92	29.49	29.49	2.00
	900	8.35	7.69	1.54	10.81	9.93	1.59	13.78	12.56	1.64	16.44	14.60	1.69	19.41	17.67	1.74	22.78	22.78	1.82	26.20	26.20	1.89	29.26	29.26	1.95
70	700	7.69	7.08	1.60	10.12	9.30	1.66	12.77	11.64	1.72	15.81	14.04	1.80	18.67	16.99	1.87	21.95	21.95	1.96	25.62	25.62	2.08	29.23	29.23	2.16
	800	7.84	7.21	1.60	10.29	9.45	1.65	12.99	11.84	1.71	15.99	14.20	1.78	18.89	17.19	1.84	22.20	22.20	1.93	25.88	25.88	2.02	29.23	29.23	2.10
	900	7.96	7.32	1.61	10.43	9.59	1.66	13.21	12.05	1.71	16.16	14.35	1.77	19.08	17.37	1.83	22.42	22.42	1.91	25.96	25.96	1.98	29.10	29.10	2.05
75	700	7.30	6.71	1.67	9.74	8.95	1.73	12.37	11.28	1.80	15.54	13.80	1.88	18.37	16.72	1.96	21.60	21.60	2.06	25.21	25.21	2.18	28.90	28.90	2.26
	800	7.44	6.84	1.67	9.90	9.10	1.73	12.57	11.46	1.79	15.73	13.97	1.86	18.58	16.91	1.93	21.86	21.86	2.02	25.53	25.53	2.12	28.93	28.93	2.20
	900	7.55	6.95	1.68	10.03	9.22	1.73	12.73	11.61	1.79	15.88	14.10	1.85	18.76	17.07	1.92	22.08	22.08	2.00	25.68	25.68	2.08	28.88	28.88	2.15
25HCE430 Outdoor Section With FB4CNP030L Indoor Section																									
65	875	10.54	9.70	1.80	13.55	12.45	1.87	17.16	15.64	1.95	20.49	18.19	2.04	24.30	22.12	2.14	28.57	28.57	2.26	33.42	33.42	2.40	37.91	37.91	2.51
	1050	10.81	9.95	1.81	13.87	12.75	1.88	17.44	15.90	1.95	20.83	18.50	2.02	24.73	22.50	2.11	29.10	29.10	2.22	33.84	33.84	2.34	37.90	37.90	2.43
	1125	10.91	10.04	1.82	13.99	12.85	1.88	17.54	15.99	1.95	20.96	18.61	2.02	24.88	22.64	2.11	29.28	29.28	2.22	33.88	33.88	2.32	37.80	37.80	2.41
70	875	10.08	9.27	1.87	13.10	12.04	1.95	16.82	15.34	2.04	20.13	17.88	2.13	23.89	21.74	2.23	28.09	28.09	2.35	32.88	32.88	2.50	37.48	37.48	2.62
	1050	10.34	9.51	1.89	13.40	12.31	1.95	17.12	15.61	2.03	20.47	18.18	2.11	24.31	22.12	2.20	28.60	28.60	2.31	33.42	33.42	2.44	37.51	37.51	2.53
	1125	10.44	9.60	1.90	13.51	12.42	1.96	17.23	15.71	2.04	20.59	18.29	2.11	24.46	22.26	2.20	28.79	28.79	2.31	33.53	33.53	2.42	0.00	0.00	0.00
75	875	9.61	8.84	1.95	12.64	11.62	2.02	16.08	14.66	2.11	19.78	17.57	2.22	23.48	21.37	2.32	27.62	27.62	2.45	32.34	32.34	2.60	37.01	37.01	2.73
	1050	9.86	9.07	1.96	12.94	11.89	2.03	16.76	15.28	2.12	20.11	17.86	2.20	23.89	21.74	2.30	28.11	28.11	2.41	32.93	32.93	2.54	37.11	37.11	2.64
	1125	9.95	9.16	1.97	13.05	11.99	2.04	16.87	15.39	2.12	20.23	17.97	2.20	24.04	21.88	2.29	28.30	28.30	2.40	33.08	33.08	2.52	37.07	37.07	2.62
25HCE436 Outdoor Section With FB4CNP036L Indoor Section																									
65	1050	12.92	11.89	2.18	16.50	15.16	2.26	20.40	18.60	2.34	24.90	22.12	2.45	29.12	26.50	2.55	33.86	33.86	2.66	39.25	39.25	2.81	45.49	45.49	3.02
	1200	13.19	12.13	2.20	16.81	15.44	2.27	20.77	18.94	2.35	25.23	22.40	2.44	29.49	26.84	2.53	34.32	34.32	2.63	39.87	39.87	2.76	46.23	46.23	2.94
	1350	13.43	12.35	2.23	17.08	15.69	2.29	21.13	19.27	2.36	25.51	22.66	2.44	29.82	27.14	2.52	34.70	34.70	2.61	40.38	40.38	2.74	46.70	46.70	2.88
70	1050	12.30	11.32	2.26	15.91	14.62	2.34	19.81	18.06	2.43	24.51	21.77	2.55	28.67	26.09	2.65	33.35	33.35	2.77	38.60	38.60	2.93	44.71	44.71	3.15
	1200	12.56	11.56	2.28	16.22	14.90	2.36	20.15	18.38	2.44	24.82	22.05	2.54	29.04	26.43	2.63	33.80	33.80	2.74	39.20	39.20	2.88	45.47	45.47	3.07
	1350	12.80	11.77	2.31	16.48	15.15	2.38	20.47	18.66	2.45	25.10	22.29	2.55	29.36	26.72	2.63	34.19	34.19	2.72	39.70	39.70	2.85	46.01	46.01	3.02
75	1050	11.66	10.73	2.35	15.30	14.06	2.43	19.20	17.50	2.53	24.07	21.37	2.66	28.23	25.69	2.77	32.83	32.83	2.89	37.95	37.95	3.06	43.92	43.92	3.29
	1200	11.92	10.97	2.37	15.60	14.34	2.45	19.54	17.82	2.53	24.41	21.68	2.65	28.60	26.02	2.75	33.28	33.28	2.85	38.54	38.54	3.00	44.68	44.68	3.22
	1350	12.15	11.18	2.40	15.87	14.58	2.47	19.85	18.10	2.55	24.69	21.93	2.65	28.91	26.31	2.74	33.66	33.66	2.84	39.03	39.03	2.98	45.28	45.28	3.16

See notes on page 18

HEAT PUMP HEATING PERFORMANCE CONTINUED

INDOOR AIR		OUTDOOR COIL ENTERING AIR TEMPERATURES ° F (° C)																							
		-3 (19.4)			7 (-13.9)			17 (-8.3)			27 (-2.i8)			37 (2.8)			47 (8.3)			57 (13.9)			67 (19.4)		
EDB ° F (° C)	CFM	Capacity MBtuh		Total Sys-tem KW	Capacity MBtuh		Total Sys-tem KW	Capacity MBtuh		Total Sys-tem KW	Capacity MBtuh		Total Sys-tem KW	Capacity MBtuh		Total Sys-tem KW	Capacity MBtuh		Total Sys-tem KW	Capacity MBtuh		Total Sys-tem KW	Capacity MBtuh		Total Sys-tem KW
		Total	Integ		Total	Integ		Total	Integ		Total	Integ		Total	Integ		Total	Integ		Total	Integ		Total	Integ	
25HCE442 Outdoor Section With FB4CNP042L Indoor Section																									
65	1225	15.59	14.35	2.48	19.93	18.31	2.59	24.83	22.64	2.71	30.26	26.88	2.87	35.66	32.45	3.01	41.58	41.58	3.18	48.02	48.02	3.34	53.69	53.69	3.47
	1400	15.91	14.64	2.50	20.28	18.64	2.59	25.75	23.48	2.72	30.60	27.17	2.84	36.05	32.81	2.98	42.10	42.10	3.14	48.21	48.21	3.26	53.51	53.51	3.37
	1575	16.19	14.89	2.51	20.58	18.91	2.60	26.05	23.75	2.72	30.91	27.46	2.84	36.39	33.12	2.96	42.45	42.45	3.10	48.18	48.18	3.20	53.24	53.24	3.31
70	1225	14.78	13.60	2.58	19.20	17.64	2.69	24.06	21.93	2.82	29.80	26.47	2.98	35.19	32.02	3.14	41.00	41.00	3.32	47.42	47.42	3.48	53.09	53.09	3.62
	1400	15.07	13.87	2.59	19.52	17.94	2.69	24.44	22.28	2.81	30.13	26.76	2.96	35.55	32.35	3.10	41.49	41.49	3.27	47.70	47.70	3.40	52.99	52.99	3.52
	1575	15.33	14.10	2.61	19.82	18.21	2.71	24.79	22.60	2.82	30.42	27.02	2.95	35.89	32.66	3.09	41.91	41.91	3.24	47.75	47.75	3.35	52.74	52.74	3.45
75	1225	14.00	12.88	2.68	18.50	17.00	2.79	23.38	21.32	2.93	29.35	26.07	3.11	34.70	31.57	3.28	40.41	40.41	3.47	46.83	46.83	3.64	52.47	52.47	3.79
	1400	14.27	13.13	2.69	18.80	17.28	2.80	23.74	21.65	2.92	29.68	26.36	3.09	35.07	31.92	3.24	40.89	40.89	3.41	47.13	47.13	3.55	52.43	52.43	3.68
	1575	14.51	13.34	2.71	19.07	17.53	2.81	24.05	21.93	2.93	29.95	26.60	3.07	35.39	32.20	3.21	41.30	41.30	3.38	47.26	47.26	3.50	52.23	52.23	3.60
25HCE448 Outdoor Section With FB4CNP048L Indoor Section																									
65	1400	16.35	15.04	2.75	21.40	19.66	2.87	26.82	24.46	3.00	33.50	29.76	3.17	39.20	35.67	3.31	45.68	45.68	3.48	53.36	53.36	3.67	61.87	61.87	3.84
	1600	16.69	15.36	2.78	21.78	20.01	2.89	27.25	24.85	3.00	33.88	30.09	3.16	39.67	36.10	3.29	46.26	46.26	3.44	54.19	54.19	3.61	62.42	62.42	3.76
	1800	17.00	15.64	2.81	22.12	20.33	2.91	27.64	25.20	3.02	34.22	30.40	3.17	40.06	36.45	3.28	46.75	46.75	3.42	54.77	54.77	3.57	62.78	62.78	3.72
70	1400	15.48	14.25	2.85	20.60	18.93	2.97	26.05	23.75	3.11	32.86	29.19	3.29	38.68	35.20	3.45	45.00	45.00	3.62	52.51	52.51	3.82	61.02	61.02	4.00
	1600	15.80	14.54	2.87	20.97	19.27	2.99	26.47	24.14	3.12	33.35	29.62	3.28	39.10	35.58	3.42	45.56	45.56	3.58	53.28	53.28	3.75	61.59	61.59	3.92
	1800	16.05	14.76	2.91	21.28	19.55	3.02	26.84	24.47	3.13	33.71	29.94	3.29	39.47	35.92	3.42	46.04	46.04	3.56	53.98	53.98	3.72	61.98	61.98	3.87
85	1400	13.11	12.07	3.19	18.31	16.83	3.34	23.83	21.72	3.50	29.75	26.42	3.67	37.16	33.82	3.93	43.00	43.00	4.12	49.89	49.89	4.32	58.18	58.18	4.52
	1600	13.37	12.30	3.22	18.63	17.12	3.35	24.21	22.07	3.50	30.22	26.84	3.66	37.55	34.17	3.89	43.52	43.52	4.07	50.66	50.66	4.25	58.86	58.86	4.43
	1800	13.58	12.49	3.25	18.88	17.35	3.38	24.50	22.34	3.51	30.57	27.15	3.66	37.88	34.48	3.87	43.96	43.96	4.04	51.35	51.35	4.20	59.33	59.33	4.37
25HCE460 Outdoor Section With FX4DN(B,F)061L Indoor Section																									
65	1750	21.14	19.45	3.33	26.85	24.67	3.46	33.16	30.23	3.60	40.66	36.11	3.79	47.51	43.23	3.95	55.22	55.22	4.13	64.29	64.29	4.32	73.31	73.31	4.50
	2000	21.51	19.79	3.36	27.26	25.05	3.48	33.65	30.68	3.61	41.05	36.45	3.77	48.03	43.70	3.92	55.88	55.88	4.08	64.95	64.95	4.23	73.54	73.54	4.40
	2250	21.84	20.10	3.40	27.62	25.39	3.51	34.07	31.07	3.63	41.40	36.77	3.78	48.48	44.12	3.91	56.46	56.46	4.07	65.31	65.31	4.19	73.39	73.39	4.34
70	1750	20.38	18.75	3.48	26.13	24.01	3.62	32.40	29.54	3.76	40.19	35.69	3.97	46.94	42.71	4.14	54.50	54.50	4.32	63.44	63.44	4.51	72.41	72.41	4.70
	2000	20.74	19.08	3.51	26.54	24.39	3.64	32.87	29.97	3.77	40.59	36.05	3.96	47.44	43.17	4.11	55.15	55.15	4.27	64.14	64.14	4.42	72.69	72.69	4.60
	2250	21.08	19.40	3.55	26.91	24.73	3.67	33.30	30.36	3.79	40.95	36.37	3.96	47.88	43.57	4.09	55.71	55.71	4.25	64.55	64.55	4.38	72.63	72.63	4.53
75	1750	19.58	18.01	3.63	25.36	23.30	3.78	31.62	28.83	3.94	39.67	35.23	4.16	46.37	42.20	4.33	53.80	53.80	4.52	62.59	62.59	4.72	71.50	71.50	4.92
	2000	19.94	18.35	3.67	25.78	23.69	3.80	32.10	29.27	3.94	40.12	35.64	4.14	46.85	42.63	4.29	54.42	54.42	4.46	63.33	63.33	4.63	71.81	71.81	4.80
	2250	20.28	18.65	3.71	26.15	24.03	3.83	32.52	29.65	3.96	40.49	35.96	4.14	47.28	43.02	4.28	54.97	54.97	4.43	63.78	63.78	4.57	71.82	71.82	4.73

NOTE: When the required data falls between the published data, interpolation may be performed. Extrapolation is not an acceptable practice.

* The Btuh heating capacity values shown are net integrated values from which the defrost effect has been subtracted. The Btuh heating from supplement heaters should be added to those values to obtain total Sys. capacity.

† The kW values include the compressor, outdoor fan motor, and indoor blower motor. The kW from supplement heaters should be added to these values to obtain total Sys. kilowatts.

EDB — Entering Dry Bulb

GUIDE SPECIFICATIONS
GENERAL

System Description

Outdoor-mounted, air-cooled, split-system heat pump unit suitable for ground or rooftop installation. Unit consists of a hermetic compressor, an air-cooled coil, propeller-type condenser fan, and a control box. Unit will discharge supply air upward as shown on contract drawings. Unit will be used in a refrigeration circuit to match up to a packaged fan coil or coil unit.

Quality Assurance

— Unit will be rated in accordance with the latest edition of AHRI Standard 240.

— Unit will be certified for capacity and efficiency, and listed in the latest AHRI directory.

— Unit construction will comply with latest edition of ANSI/ ASHRAE and with NEC.

— Unit will be constructed in accordance with UL standards and will carry the UL label of approval. Unit will have C-UL approval.

— Unit cabinet will be capable of withstanding Federal Test Method Standard No. 141 (Method 6061) 500-hr salt spray test.

— Air-cooled condenser coils are pressure tested and the outdoor unit is leak tested.

— Unit constructed in ISO9001 approved facility.

Delivery, Storage, and Handling

— Unit will be shipped as single package only and is stored and handled per unit manufacturer's recommendations.

Warranty (for inclusion by specifying engineer)

— U.S. and Canada only.

PRODUCTS

Equipment

— Factory assembled, single piece, air-cooled heat pump unit. Contained within the unit enclosure is all factory wiring, piping, controls, compressor, refrigerant charge Puron® (R-410A), and special features required prior to field start-up.

Unit Cabinet

— Unit cabinet will be constructed of galvanized steel, bonderized, and coated with a powder coat paint.

— Available with dense grille only.

Fans

— Condenser fan will be direct-drive propeller type, discharging air upward.

— Condenser fan motors will be totally enclosed, 1-phase type with class B insulation and permanently lubricated bearings.

— Shafts will be corrosion resistant.

— Fan blades will be statically and dynamically balanced.

— Condenser fan openings will be equipped with steel wire safety guards.

Compressor

— Compressor will be hermetically sealed.

— Compressor will be mounted on rubber vibration isolators.

Condenser Coil

— Condenser coil will be air cooled.

— Coil will be constructed of aluminum fins mechanically bonded to copper tubes which are then cleaned, dehydrated, and sealed.

Refrigeration Components

— Refrigeration circuit components will include liquid-line shutoff valve with sweat connections, vapor-line shutoff valve with sweat connections, system charge of Puron® (R-410A) refrigerant, POE compressor oil, accumulator, and reversing valve.

Operating Characteristics

— The capacity of the unit will meet or exceed _____ Btuh at a suction temperature of _____ °F/°C. The power consumption at full load will not exceed _____ kW.

— Combination of the unit and the evaporator or fan coil unit will have a total net cooling capacity of _____ Btuh or greater at conditions of _____ CFM entering air temperature at the evaporator at _____ °F wet bulb and _____ °F/°C dry bulb, and air entering the unit at _____ °F/°C.

— The system will have a SEER of _____ Btuh/watt or greater at DOE conditions.

Electrical Requirements

— Nominal unit electrical characteristics will be _____ v, single phase, 60 hz. The unit will be capable of satisfactory operation within voltage limits of _____ v to _____ v.

— Unit electrical power will be single point connection.

— Control circuit will be 24v.

Special Features

— Refer to section of this literature identifying accessories and descriptions for specific features and available enhancements.

SYSTEM DESIGN SUMMARY

1. Intended for outdoor installation with free air inlet and outlet. Outdoor fan external static pressure available is less than 0.01-in. wc.
2. Minimum outdoor operating air temperature without low-ambient operation accessory is 55°F (12.8°C).
3. Maximum outdoor operating air temperature for cooling mode is 125°F (51.7°C).
4. Minimum outdoor operating air temperature for heating mode is –10°F (–23.3°C).
5. Maximum outdoor operating air temperature for heating mode is 66°F (18.9°C).
6. For reliable operation, unit should be level in all horizontal planes.
7. For interconnecting refrigerant tube lengths greater than 80 ft (23.4 m) and/or elevation differences between indoor and outdoor units greater than 20 ft (6.1 m), consult Residential Piping and Longline Guideline and Service Manual available from equipment distributor.
8. If any refrigerant tubing is buried, provide a 6 in. (152.4 mm) vertical rise to the valve connections at the unit. Refrigerant tubing lengths up to 36 in. (914.4 mm) may be buried without further consideration. Do not bury refrigerant lines longer than 36 in. (914.4 mm).
9. Use only copper wire for electric connection at unit. Aluminum and clad aluminum are not acceptable for the type of connector provided.
10. Do not apply capillary tube indoor coils to these units.
11. Factory-supplied filter drier must be installed.

Copyright 2017 Carrier Corp. • 7310 W. Morris St. • Indianapolis, IN 46231