27VNA1 Infinity®
Variable Speed Cold Climate Heat Pump with Greenspeed® Intelligence and Puron Advance™ (R-454B) Refrigerant
4.5 Nominal Tons

PRODUCT DATA

Carrier's 27VNA1 Cold Climate Heat Pump with Greenspeed™ Intelligence is another breakthrough product providing up to 12.5 HSPF2 heating efficiency and up to 21 SEER2 cooling efficiency. The variable speed capacity control achieves 100% heating capacity down to 5°F. Lower speed operation is available when needed in cooling for enhanced comfort and dehumidification.

This product has been designed and manufactured to meet Energy Star® criteria for energy efficiency when matched with appropriate coil components. Refer to the AHRI directory (www.ahridirectory.org) for the most up-to-date ratings information.

Industry leading Features / Benefits

Energy Efficiency
- Up to 21 SEER2, 13 EER2, 12.5 HSPF2
- Microtube Technology™ refrigeration system
- Indoor air quality accessories available

Sound
- Sound level as low as 55 dBA in low speed

Comfort
- Variable speed compressor with capacity range from 30-100%
- Air cooled variable frequency drive
  - Infinity® System Control with Greenspeed™ Intelligence required
  - Energy Tracking capability with the Infinity® System Control and latest software version (Energy Tracking has the ability to monitor and estimate the energy consumption of your Infinity® system.)

Reliability
- Non-ozone depleting, low global warming potential Puron Advance™ refrigerant
- Greenspeed Intelligence actively monitors critical system parameters
- High pressure switch
- Suction and discharge pressure transducer
- Electronic expansion valve (EXV) for optimum heating performance
- Filter drier (field installed)
- Internal compressor stator heat standard
- Balanced refrigeration system for maximum reliability

Flexibility and Installation:
- Vertex™ Technology compatible
- 2 control wires to outdoor unit
- Minimum and maximum airflow adjustments
- Compressor heating capacity control
- Hybrid Heat™ Dual Fuel capable

Durability
WeatherArmor Ultra™ Protection Package:
- Solid, durable sheet metal construction
- Steel louver coil guard
- Baked-on, complete outer coverage, powder paint

Applications
- Heating mode operation down to -23°F (-30.5°C) outdoor ambient temperature.
- Cooling mode operation up to 125°F (51.7°C) outdoor ambient temperature.
- Long-line - up to 250 feet (76.2 m) total equivalent length, up to 200 feet (60.7 m) outdoor above indoor, or up to 80 ft. (24.4 m) indoor above outdoor (See Long Line Guide for more information.)
- Low ambient cooling down to 0°F (-17.8°C) when enabled with the Infinity® System Control.

Model Number Nomenclature

1	2	3	4	5	6	7	8	9	10	11	12	13
N	N	A	A	A/N	N	N	N	A/N	A/N	A/N	N	N
2	**7**	**V**	**N**	**A**	**1**	**5**	**4**	**A**	**0**	**0**	**3**	**0**
Refrigerant &OD Type		OD Design type	Tier	Major Series	SEER2	Nominal Cooling Capacity		Variations	Feature	Open	Voltage	Minor Series
27 = Puron Advance™ (R-454B) HP		V = Variable Speed	N= Infinity®	A = Initial Series	1 = 21 SEER2	1,000 Btuh (nominal)		A = Standard HP	0=Standard	0=Not Defined	3=208-230-1	0, 1, 2...

Use of the AHRI Certified TM Mark indicates a manufacturer's participation in the program For verification of certification for individual products, go to www.ahridirectory.org.

Quality ISO 9001

This product has been designed and manufactured to meet Energy Star® criteria for energy efficiency when matched with appropriate coil components. However, proper refrigerant charge and proper air flow are critical to achieve rated capacity and efficiency. Installation of this product should follow all manufacturing refrigerant charging and air flow instructions. **Failure to confirm proper charge and air flow may reduce energy efficiency and shorten equipment life.**

CATALOG ORDERING NUMBERS

Size	Model Number
54	27VNA154A003

STANDARD FEATURES

FEATURES	Unit Size
	54
Puron Advance™ (R-454B) Refrigerant	X
Variable Speed Scroll Compressor	X
Air-Cooled Variable Frequency Drive	X
Louvered Coil Guard	X
Factory Provided, Field-Installed Filter Drier	X
Front-Seating Service Valves	X
In-unit Pressure and Temperature Protection	X
Suction and Discharge Pressure Transducers	X
High Pressure Switch	X
Compressor Stator Heat	X
Utility Interface Connections	X
Enhanced Diagnostics using Greenspeed® Intelligence	X
Energy Tracking Capability	X
Sound Blanket	X
Outdoor Air Temperature Sensor	X
Long Line Capability	X

X = Standard

AHRI RATINGS

NOTE: Ratings contained in this document are subject to change at any time.

For AHRI ratings certificates, please refer to the AHRI directory www.ahridirectory.org
Additional ratings and system combinations can be accessed via the Ratings Database here: www.MyCarrierRatings.com

MIN/MAX AIRFLOW TABLES

The indoor airflow delivered by this system varies significantly based on outdoor temperature, indoor unit combination, and system demand. The airflows on these tables are for duct design considerations.

Duct systems capable of these ranges will ensure the system will deliver full capacity at all outdoor temperatures. Minimum and maximum airflows can be adjusted from these numbers in the Infinity® System Control Heat Pump Setup screen.

Size	Cooling - Comfort Mode		Cooling - Efficiency Mode	
	Max Airflow	Min Airflow	Max Airflow	Min Airflow
54	1200	550	1800	850

Size	Heating - Comfort Mode		Heating - Efficiency Mode	
	Max Airflow	Min Airflow	Max Airflow	Min Airflow
54	1700	500	2000	850

PHYSICAL DATA

UNIT SIZE	54
COMPRESSOR TYPE	Variable Speed Scroll
REFRIGERANT	Puron Advance™ (R-454B)
Charge lb* (kg)	14.1 (6.40)
Outdoor Htg Exp. Device	EXV
COND FAN	Forward Swept Propeller Type, Direct Drive
Air Discharge	Vertical
Maximum Air Qty (CFM)	5000
Motor HP	1/3
Motor RPM	200-800
COND COIL	
Face Area (sq ft.)	30.1
Fins per In.	20
Rows	2
Circuits	9
VALVE CONNECT. (In. ID)	
Vapor	7/8
Liquid	3/8
REFRIGERANT TUBES† (In. OD)	
Rated Vapor†	1 - 1/8
Max Rated Liquid Line‡	3/8

*.For 15 ft. lineset
†.Units are rated with 25 ft (7.6 m) of lineset length. See Vapor Line Sizing and Cooling Capacity Loss table when using other sizes and lengths of lineset.
‡.See Liquid Line Sizing For Cooling Only Systems with Puron Advance™ Refrigerant tables.
Note: See unit Installation Instruction for proper installation.

ELECTRICAL DATA

UNIT SIZE	V-PH	OPER VOLTS*		COMPR		FAN	MCA	MAX FUSE† or CKT BRK AMPS	SCCR
		MAX	MIN	MRC	RLA	FLA			
54	208-230-1	253	197	35	18.7	0.88	37.5	40	5kA rms

*. Permissible limits of the voltage range at which the unit will operate satisfactorily
†. Time-Delay fuse.
FLA - Full Load Amps, **MCA**-Minimum Circuit Amps, **MRC -** Maximum Rated Current**, RLA**-Rated Load Amps
SCCR - Short-Circuit Current Rating
NOTE: Control circuit is 24-V on all units and requires external power source. Copper wire must be used from service disconnect to unit.
All motors/compressors contain internal overload protection.

REFRIGERANT PIPING LENGTH LIMITATIONS

Maximum Line Lengths:

The maximum allowable equivalent length for Heat Pumps varies depending on the vertical separation. See the tables below for allowable lengths depending on whether the outdoor unit is on the same level, above or below the outdoor unit.

Maximum Line Lengths for Heat Pump Applications

	MAXIMUM ACTUAL LENGTH* ft (m)	MAXIMUM EQUIVALENT LENGTH† ft (m)	MAXIMUM VERTICAL SEPARATION ft (m)
Units on equal level	200 (61.0)	250 (76.2)	N/A
Outdoor unit ABOVE indoor unit	200 (61.0)	250 (76.2)	200 (61.0)
Outdoor unit BELOW indoor unit	200 (61.0)	250 (76.2)	80 (24.4)

*. Maximum actual length not to exceed 200 ft (61 m)
†. Equivalent length accounts for losses due to elbows or fitting. See the Long Line Guideline for details.

LONG LINE APPLICATIONS

An application is considered Long Line when the refrigerant level in the system requires the use of accessories to maintain acceptable refrigerant management for systems reliability. 27VNA1 Heat Pumps do not require any additional accessories for Long Line applications. Defining a system as long line depends on the liquid line diameter, actual length of the tubing, and vertical separation between the indoor and outdoor units.

For heat pump systems, the chart below shows when an application is considered Long Line.

Refrigerant Long Line Description ft (m)

Liquid Line Size	Units On Same Level ft (m)	Outdoor Above Indoor ft (m)	Outdoor Below Indoor ft (m)
3/8	80 (24.4)	80 (24.4)	20 (6.1) vertical or 80 (24.4) total

NOTE: See Long Line Guideline for details

COOLING CAPACITY LOSS TABLE

Nominal Size (Btuh)	Line OD (in)	Cooling Capacity Loss (%) Equivalent Length (ft)										
		25	50	75	80	100	125	150	175	200	225	250
54000	3/4	1.4	3.1	4.9	5.3	6.5	8.1	9.6	11.0	12.3	13.5	14.7
	7/8	0.6	1.6	2.7	2.9	3.7	4.7	5.6	6.6	7.5	8.3	9.1
	1 1/8	0.0	0.5	1.1	1.2	1.6	2.1	2.5	3.0	3.5	3.9	4.4

Note: Rated size line OD and Rate Equivalent Length are in **BOLD**.

ACCESSORIES

KIT NUMBER	KIT NAME	54
KSASH2701COP	SOUND BLANKET (ACCUMULATOR)	X
KSASF0201AAA	SUPPORT FEET	X
KHASS0606MPK	SNOW STAND	X

X = Accessory

ACCESSORY USAGE GUIDELINE

ACCESSORY	REQUIRED FOR LOW-AMBIENT COOLING APPLICATIONS (Below 55°F/12.8°C)	REQUIRED FOR LONG LINE APPLICATIONS	REQUIRED FOR SEA COAST APPLICATIONS (Within 2 miles/3.22 km)
Compressor Stator Heat	Standard with Infinity® System Control	No	No
Evaporator Freeze Protection	Standard with Infinity® System Control	No	No
Low-Ambient Control	Standard with Infinity® System Control	No	No
Support Feet	Recommended	No	Recommended
Winter Start Control	Standard with Infinity® System Control	No	No

Accessory Description and Usage

Snow Stand

Coated wire rack which supports unit 18 in. (457.2 mm) above mounting pad to allow for drainage from unit base.

Usage Guideline:

Suggested in the following applications:

- Unit installations in heavy snowfall areas.
- Unit installations in snow drift locations.
- Unit installations in areas of prolonged subfreezing temperatures.
- All commercial installations.

Sound Blanket (Accumulator)

Wraparound sound reducing cover for the accumulator. Reduces possible transient tones that may resonate in the accumulator due to variability in system operation.

Usage Guideline:

Although all units are designed and tested to eliminate unpleasant tones, in the unlikely event a transient tone is experienced, this sound blanket can reduce the tone by up to 10 dB.

Support Feet

Four or five stick-on plastic feet that raise the unit 4 in. (101.6 mm) above the mounting pad. This allows sand, dirt, and other debris to be flushed from the unit base, minimizing corrosion.

Usage Guideline:

Suggested in the following applications:

Coastal installations.

Windy areas or where debris is normally circulating.

Rooftop installations.

For improved sound ratings.

SOUND POWER LEVEL

Unit Size	Typical Octave Band Spectrum (dB, without tone adjustment)	Min Cooling	Nominal* Cooling	Min Heating	Nominal* Heating
54	Speed	900	3060	900	3360
	125	66.0	69.5	62.8	66.8
	250	58.4	66.0	56.8	62.8
	500	56.1	63.2	54.1	60.5
	1000	48.0	65.5	45.3	59.1
	2000	47.0	59.7	41.4	58.1
	4000	44.8	55.6	44.0	53.8
	8000	47.6	57.1	43.4	56.6
	Sound Rating (dBA)	58	69	55	65

*. Nominal condition data taken from maximum speed operating at 95°F in cooling and 47°F in heating.
NOTE: Tested in compliance with AHRI 270-2008 but not listed with AHRI.

CHARGING SUBCOOLING

UNIT SIZE	NOMINAL* SUBCOOLING	REQUIRED SUBCOOLING _F (_C) - See System Control
54	12	Subcooling recommendation displayed on System Control in Charging Mode must be followed

*. Nominal subcooling targets for use as reference or in specific applications with 25 ft. (7.6 m) lineset, 95°F outdoor ambient, and 80°F/67°F indoor DB/WB.

DIMENSIONS

UNIT	SERIES	ELECTRICAL CHARACTERISTICS				A		B		C		D		E		F		G		H		I		J		K		OPERATING WEIGHT		SHIPPING WEIGHT		SHIPPING LENGTH / WIDTH (Sq.)		SHIPPING HEIGHT	
		208-230-1-60	208/230-3-60	460-3-60	575-3-60	INCH	MM	INCH	MM	INCH	MM	INCH	MM	INCH	MM	INCH	MM	INCH	MM	INCH	MM	INCH	MM	INCH	MM	INCH	MM	Lbs	Kgs	Lbs	Kgs	INCH	MM	INCH	MM
27VNA154A*0	0	Y	N	N	N	35	889.0	47 3/16	1199.0	7/8	22.2	6 9/16	166.1	28 7/16	722.8	9 1/8	231.3	1 1/8	28.2	3 13/16	97.4	14 1/2	368.3	16	406.4	22 1/2	571.5	370	167.8	400	181.4	38	965.0	51	1296.0

Y=YES
N=NO

NOTES:

1. CENTER OF GRAVITY .

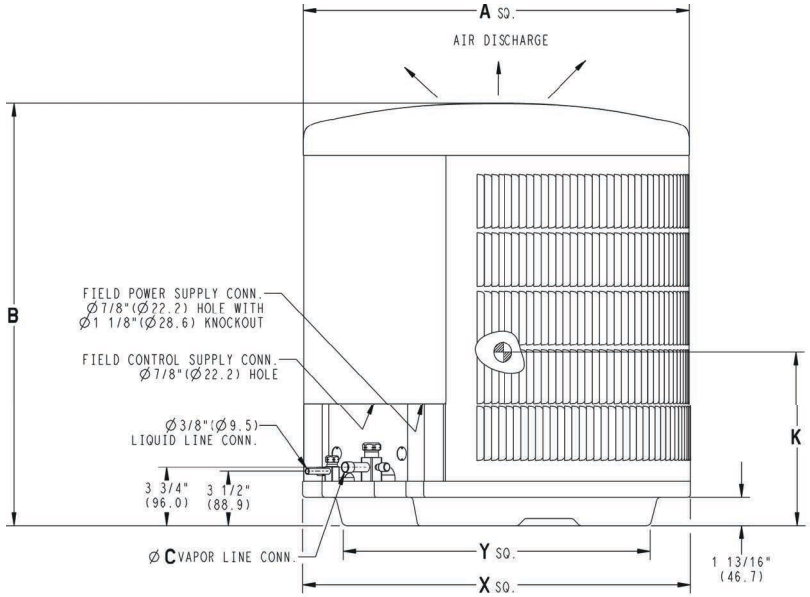

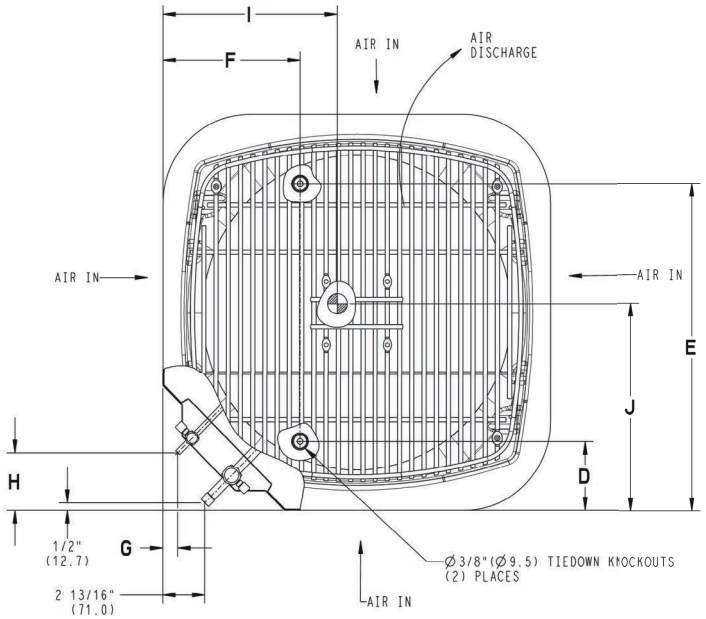

UNIT SIZE	"X" MINIMUM GROUND MOUNTING PAD APPLICATION DIMENSIONS		"Y" MINIMUM ROOF-TOP MOUNTING PAD APPLICATION DIMENSIONS	
-	23 1/8	587.3	17 7/8	454.6
-	25 3/4	654.0	20 7/16	518.5
-	31 3/16	792.5	22 15/16	583.2
54	35	889.0	26 3/4	679.7

NOTE: ALL DIMENSIONS IN INCH (MM)

U.S. ECCN: Not Subject to Regulation (N.S.R.)

SD6029-4 REV. -

Manufacturer reserves the right to change, at any time, specifications and designs without notice and without obligations.

CLEARANCES

Clearances (various examples)

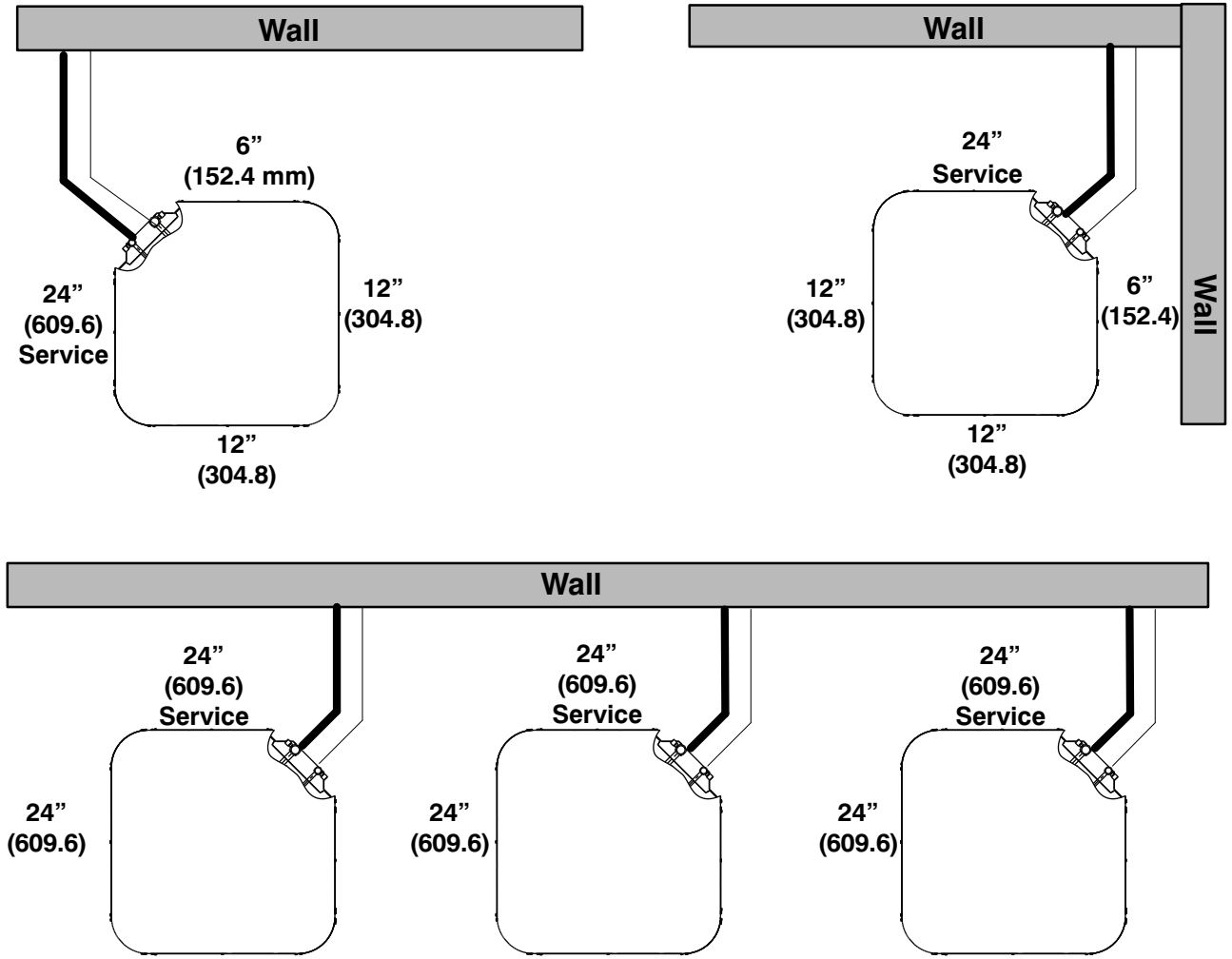

Note: Numbers in ( ) = mm

IMPORTANT: When installing multiple units in an alcove, roof well, or partially enclosed area, ensure there is adequate ventilation to prevent re-circulation of discharge air.

A07833

Manufacturer reserves the right to change, at any time, specifications and designs without notice and without obligations.

BALANCE POINT WORKSHEET

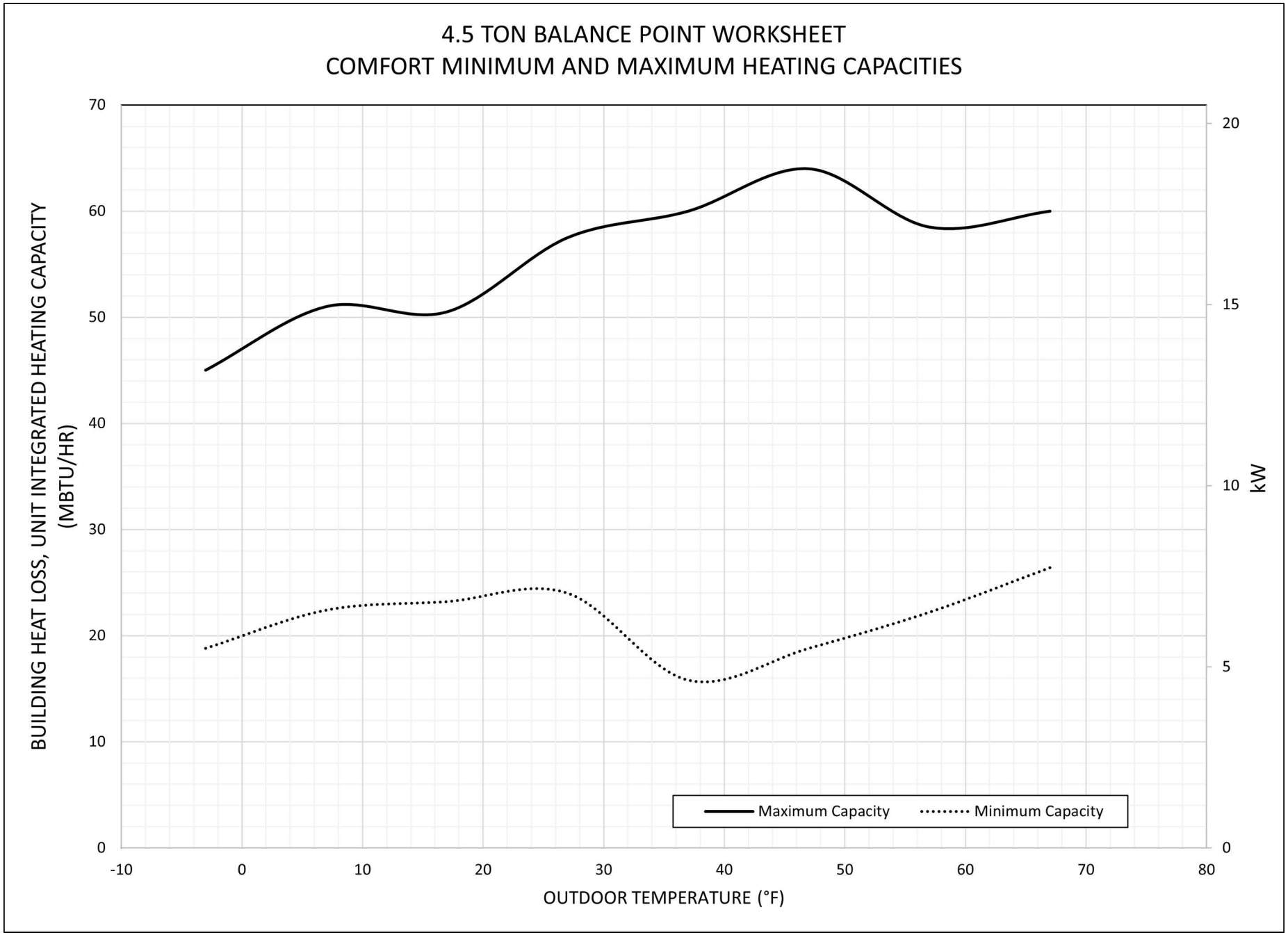

Manufacturer reserves the right to change, at any time, specifications and designs without notice and without obligations.

DETAILED COOLING CAPACITIES# - EFFICIENCY MODE

EVAPORATOR AIR °F (°C)		CONDENSER ENTERING AIR TEMPERATURES °F (°C)																											
		65.0 (18.3)				75.0 (23.9)				85.0 (29.4)				95.0 (35.0)				105.0 (40.6)				115.0 (46.1)				125.0 (51.7)			
EDB	EWB	ID SCFM	Capacity Total	Capacity Sens‡	Total Sys. KW**	ID SCFM	Capacity Total	Capacity Sens‡	Total Sys. KW**	ID SCFM	Capacity Total	Capacity Sens‡	Total Sys. KW**	ID SCFM	Capacity Total	Capacity Sens‡	Total Sys. KW**	ID SCFM	Capacity Total	Capacity Sens‡	Total Sys. KW**	ID SCFM	Capacity Total	Capacity Sens‡	Total Sys. KW**	ID SCFM	Capacity Total	Capacity Sens‡	Total Sys. KW**
Maximum Demand																													
75 (23.9)	72.0 (22.2)	1500	61.5	25	2.74	1700	60.5	24	3.42	1800	61	24	3.46	1800	58	23	3.8	1800	52	21.2	5.06	1800	49	20.4	5.63	1800	46.5	19.4	6.32
	67.0 (19.4)		55.5	32.4	2.76		54.5	32.2	3.44		55	32.8	3.47		52	32	3.77		46.5	29.8	5.02		44	29	5.6		41.5	28	6.23
	63.0 (17.2)††		51	38	2.77		50	38.5	3.44		50.5	40	3.46		48	39	3.77		42.5	36.6	4.96		40.5	35.8	5.58		38.5	34.8	6.25
	57.0 (13.9)		46	45.5	2.77		46.5	46	3.48		47.5	46	3.47		45	44.5	3.73		40.5	40.5	4.95		39	39	5.56		37.2	37.2	6.2
80 (26.7)	72.0 (22.2)	1500	61.5	32.4	2.75	1700	60.5	32.4	3.43	1800	61	33	3.47	1800	57.5	32.2	3.77	1800	51.5	30.2	5.03	1800	49	29.2	5.66	1800	46.5	28.2	6.34
	67.0 (19.4)		55	40	2.74		54.5	40.5	3.45		55	42	3.48		52	41	3.78		46.5	38.5	5.02		44	37.6	5.6		41.5	36.8	6.23
	63.0 (17.2)††		51	45.5	2.77		50.5	47	3.46		51	48.5	3.46		49	45.5	3.75		43.5	43.5	4.97		42	42	5.6		40	40	6.23
	57.0 (13.9)		48.5	48.5	2.77		49.5	49	3.47		50.5	49.5	3.45		48.5	47.5	3.78		43.5	43.5	4.99		42	42	5.61		40	40	6.25
Median Demand																													
75 (23.9)	72.0 (22.2)	950	35.4	14.6	1.09	950	34.2	13.8	1.43	950	34.2	13.7	1.52	1080	37.8	15.3	2.11	1340	43	17.7	3.84	1600	45.5	18.8	5.04	1600	43	18.1	5.66
	67.0 (19.4)		31.8	19.3	1.14		30.6	18.4	1.48		30.6	18.4	1.56		33.8	20.6	2.14		38.5	24.2	3.83		40.5	26.6	4.99		38.5	25.8	5.61
	63.0 (17.2)††		29.2	23	1.18		28	22	1.51		28	22.2	1.58		31	24.8	2.16		35.2	29.2	3.81		37.4	32.6	4.99		35.4	31.8	5.58
	57.0 (13.9)		26.6	26.6	1.21		25.8	25.6	1.54		26	25.4	1.6		29	28.4	2.17		33	33	3.8		35.8	35.8	4.97		34.2	34.2	5.57
80 (26.7)	72.0 (22.2)	950	35.2	19.4	1.09	950	34	18.6	1.43	950	34	18.5	1.51	1080	37.8	20.8	2.12	1340	42.5	24.4	3.81	1600	45.5	26.8	5.07	1600	43	26	5.67
	67.0 (19.4)		31.6	24	1.14		30.6	23.2	1.48		30.6	23.2	1.56		33.8	26.2	2.14		38	30.8	3.79		40.5	34.4	4.99		38.5	33.4	5.61
	63.0 (17.2)††		29.2	27.6	1.17		28.2	26.8	1.51		28.2	27	1.59		31.2	30.2	2.16		36	34.4	3.81		38.5	38.5	5		36.8	36.8	5.59
	57.0 (13.9)		28.4	28.4	1.19		27.6	27.4	1.52		28	27.2	1.59		31	30.4	2.16		35.2	35.2	3.8		38.5	38.5	5.01		36.8	36.8	5.61
Minimum Demand																													
75 (23.9)	72.0 (22.2)	850	22	9.6	0.38	850	20.4	8.9	0.62	850	19.8	8.6	0.74	980	27.2	11.4	1.45	1240	38.5	16	3.43	1500	43.5	18.1	4.81	1500	41.5	17.4	5.43
	67.0 (19.4)		19.9	13.9	0.46		18.5	13.1	0.7		17.8	12.9	0.8		24.2	16.3	1.48		34.6	22	3.44		39	25.4	4.78		37	24.6	5.36
	63.0 (17.2)††		18.4	17.3	0.52		17.1	16.3	0.74		16.6	15.9	0.83		22.2	20.2	1.51		31.6	26.8	3.43		35.8	31	4.74		34	30.2	5.33
	57.0 (13.9)		18	18	0.54		16.9	16.7	0.75		16.5	16.1	0.83		21.6	21.2	1.51		29.8	29.8	3.42		34	34	4.7		32.6	32.6	5.29
80 (26.7)	72.0 (22.2)	850	21.8	13.9	0.38	850	20.4	13.1	0.62	850	19.7	12.9	0.74	980	27	16.4	1.45	1240	38.5	22.2	3.44	1500	43.5	25.6	4.83	1500	41.5	24.8	5.46
	67.0 (19.4)		19.9	18.1	0.46		18.5	17.2	0.69		18.1	16.6	0.79		24.2	21.2	1.48		34.4	28.2	3.43		39	32.6	4.78		37	31.8	5.38
	63.0 (17.2)††		19.3	19.3	0.49		18.1	18	0.7		17.8	17.3	0.79		23.4	22.8	1.49		32.4	31.6	3.44		36.6	36.6	4.74		35.2	35.2	5.35
	57.0 (13.9)		19.2	19.2	0.49		18.1	18	0.7		17.8	17.3	0.8		23.2	22.8	1.48		32	32	3.43		36.6	36.6	4.75		35	35	5.32

Detailed cooling capacities are based on indoor and outdoor unit at the same elevation per AHRI standard 210/240-2008. If additional tubing length and/or indoor unit is located above outdoor unit, a slight variation in capacity may occur

† Total and sensible capacities are net capacities. Blower motor heat has been subtracted.

‡ Sensible capacities shown are based on 80°F (27°C) entering air at the indoor coil. For sensible capacities at other than 80°F (27°C), deduct 835 Btuh (245 kW) per 1000 CFM (480 L/S) of indoor coil air for each degree below 80°F (27°C), or add 835 Btuh (245 kW) per 1000 CFM (480 L/S) of indoor coil air per degree above 80°F (27°C).

** System kw is total of indoor and outdoor unit kilowatts.

Detailed cooling capacities are based on indoor and outdoor unit at the same elevation per AHRI standard 210/240-08. If additional tubing length and/or indoor unit is located above outdoor unit, a slight variation in capacity may occur.

NOTE: When the required data falls between the published data, interpolation may be performed. Extrapolation is not an acceptable practice.

EDB — Entering Dry Bulb

EWB — Entering Wet Bulb

Manufacturer reserves the right to change, at any time, specifications and designs without notice and without obligations.

DETAILED COOLING CAPACITIES# - COMFORT MODE

EVAPORATOR AIR °F (°C)		CONDENSER ENTERING AIR TEMPERATURES °F (°C)																											
		65.0 (18.3)				75.0 (23.9)				85.0 (29.4)				95.0 (35.0)				105.0 (40.6)				115.0 (46.1)				125.0 (51.7)			
EDB	EWB	ID SCFM	Capacity MBtuh Total	Capacity MBtuh Sens‡	Total Sys. KW**	ID SCFM	Capacity MBtuh Total	Capacity MBtuh Sens‡	Total Sys-tem KW**	ID SCFM	Capacity MBtuh Total	Capacity MBtuh Sens‡	Total Sys-tem KW**	ID SCFM	Capacity MBtuh Total	Capacity MBtuh Sens‡	Total Sys-tem KW**	ID SCFM	Capacity MBtuh Total	Capacity MBtuh Sens‡	Total Sys-tem KW**	ID SCFM	Capacity MBtuh Total	Capacity MBtuh Sens‡	Total Sys-tem KW**	ID SCFM	Capacity MBtuh Total	Capacity MBtuh Sens‡	Total Sys-tem KW**
Maximum Demand																													
75 (23.9)	72.0 (22.2)	1150	58.5	23.8	2.57	1200	57.5	22.8	3.1	1200	58	22.6	3.1	1100	54	21.2	3.38	1000	47.5	19.3	4.5	950	45	18.2	5.09	950	43	17.4	5.76
	67.0 (19.4)		52.5	29.4	2.58		51.5	28.6	3.11		52	28.6	3.09		48.5	26.8	3.35		43	24	4.5		40.5	22.8	5.05		38.5	22	5.7
	63.0 (17.2)††		48.5	34	2.6		47.5	33.2	3.12		48	33.4	3.1		44.5	31	3.34		39.5	27.8	4.48		37	26.4	5		35.2	25.6	5.62
	57.0 (13.9)		43	40.5	2.61		42.5	40	3.15		42.5	40	3.08		39.5	37.4	3.32		34.6	33.4	4.39		32.6	31.6	4.92		31	30.6	5.54
80 (26.7)	72.0 (22.2)	1150	58.5	29.6	2.58	1200	57.5	28.8	3.11	1200	58	28.8	3.11	1100	54	27	3.38	1000	47.5	24.2	4.51	950	45	23	5.1	950	43	22.2	5.78
	67.0 (19.4)		52.5	35.2	2.58		51.5	34.6	3.11		52	34.8	3.1		48.5	32.4	3.36		42.5	29	4.45		40	27.4	5		38.5	26.6	5.7
	63.0 (17.2)††		48.5	39.5	2.6		47.5	39	3.12		48	39.5	3.1		44.5	36.6	3.34		39	32.8	4.42		37	31	5		35.2	30.2	5.64
	57.0 (13.9)		44	44	2.6		44	43.5	3.13		44.5	43.5	3.08		41.5	40.5	3.34		36.2	36.2	4.43		34	34	4.94		32.8	32.8	5.6
Median Demand																													
75 (23.9)	72.0 (22.2)	875	40.5	16.6	1.45	875	39.5	15.7	1.83	875	39.5	15.6	1.89	850	40	15.8	2.35	875	42.5	17.2	4.09	850	40	16.3	4.6	825	38.5	15.6	5.25
	67.0 (19.4)		36.4	20.8	1.48		35.4	19.9	1.87		35.6	19.9	1.92		35.8	20	2.36		38	21	4.05		36	20	4.57		34.4	19.2	5.17
	63.0 (17.2)††		33.4	24.2	1.51		32.4	23.2	1.89		32.6	23.4	1.94		32.8	23.4	2.37		34.8	24	4.02		33	22.8	4.53		31.4	22.2	5.11
	57.0 (13.9)		29.6	29.2	1.54		28.8	28.2	1.93		28.8	28.2	1.95		28.8	28.2	2.36		30.6	28.4	3.97		29	27	4.48		27.6	26.4	5.05
80 (26.7)	72.0 (22.2)	875	40.5	21	1.45	875	39.5	20	1.84	875	39.5	20	1.89	850	40	20.2	2.36	875	42.5	21.2	4.1	850	40	20.2	4.61	825	38.5	19.4	5.25
	67.0 (19.4)		36.4	25.2	1.49		35.2	24.2	1.86		35.4	24.4	1.92		35.6	24.4	2.35		39	26.2	4.1		36.8	25	4.6		34.8	23.8	5.18
	63.0 (17.2)††		33.4	28.6	1.51		32.4	27.6	1.89		32.6	27.8	1.94		32.8	27.6	2.37		34.8	28	4.02		33	26.8	4.55		31.4	26	5.11
	57.0 (13.9)		31	31	1.53		30.4	30.2	1.91		30.8	30	1.95		30.6	30	2.36		31.2	31.2	3.98		29.8	29.8	4.5		28.6	28.6	5.05
Minimum Demand																													
75 (23.9)	72.0 (22.2)	600	29.4	12.1	0.94	550	27.8	11.1	1.25	550	27.8	10.9	1.32	600	31.2	12.3	1.88	750	37.6	15.5	3.91	750	36	14.8	4.39	700	34.6	14.1	4.99
	67.0 (19.4)		26.4	15	0.98		25	13.7	1.29		25	13.6	1.36		27.8	15.2	1.89		33.8	18.2	3.88		32.2	17.6	4.34		31	16.9	4.94
	63.0 (17.2)††		24.2	17.3	1.02		22.8	15.8	1.31		22.8	15.7	1.38		25.4	17.5	1.9		30.8	20.4	3.81		29.6	19.7	4.31		28.2	19.1	4.86
	57.0 (13.9)		21.4	20.6	1.06		20	18.8	1.34		19.9	18.8	1.4		22.2	20.8	1.9		27.2	23.6	3.78		26	22.8	4.26		24.8	22.2	4.81
80 (26.7)	72.0 (22.2)	600	29.4	15.1	0.94	550	27.8	13.9	1.25	550	27.8	13.8	1.33	600	31	15.4	1.87	750	37.6	18.5	3.92	750	36	17.8	4.4	700	34.6	17.1	5
	67.0 (19.4)		26.4	18	0.99		24.8	16.4	1.28		24.8	16.4	1.35		27.8	18.3	1.89		36	23.6	3.9		34.4	23	4.4		32.4	21.4	4.97
	63.0 (17.2)††		24.2	20.2	1.02		22.8	18.5	1.31		22.8	18.5	1.38		25.4	20.6	1.9		30.8	23.4	3.82		29.6	22.6	4.33		28.2	22	4.86
	57.0 (13.9)		22.2	22.2	1.05		20.8	20.6	1.34		21	20.4	1.39		23.2	22.8	1.9		27.2	26.6	3.78		26	25.8	4.26		24.8	24.8	4.79

Detailed cooling capacities are based on indoor and outdoor unit at the same elevation per AHRI standard 210/240-2008. If additional tubing length and/or indoor unit is located above outdoor unit, a slight variation in capacity may occur
† Total and sensible capacities are net capacities. Blower motor heat has been subtracted.
‡ Sensible capacities shown are based on 80°F (27°C) entering air at the indoor coil. For sensible capacities at other than 80°F (27°C), deduct 835 Btuh (245 kW) per 1000 CFM (480 L/S) of indoor coil air for each degree below 80°F (27°C), or add 835 Btuh (245 kW) per 1000 CFM (480 L/S) of indoor coil air per degree above 80°F (27°C).
** System kw is total of indoor and outdoor unit kilowatts.
# Detailed cooling capacities are based on indoor and outdoor unit at the same elevation per AHRI standard 210/240-08. If additional tubing length and/or indoor unit is located above outdoor unit, a slight variation in capacity may occur.
NOTE: When the required data falls between the published data, interpolation may be performed. Extrapolation is not an acceptable practice.
EDB — Entering Dry Bulb
EWB — Entering Wet Bulb

Manufacturer reserves the right to change, at any time, specifications and designs without notice and without obligations.

HEAT PUMP HEATING PERFORMANCE - EFFICIENCY MODE

INDOOR AIR °F (°C)	OUTDOOR ENTERING AIR TEMPERATURES °F (°C)																																			
	-3 (-19.4)				7 (-13.9)				17 (-8.3)				27 (-2.8)				37 (2.7)				47 (8.3)				57 (13.9)				67 (19.4)			
EDB	ID SCFM	Capacity Total	Capacity Integ‡	Total Sys. KW**	ID SCFM	Capacity Total	Capacity Integ‡	Total Sys. KW**	ID SCFM	Capacity Total	Capacity Integ‡	Total Sys. KW**	ID SCFM	Capacity Total	Capacity Integ‡	Total Sys. KW**	ID SCFM	Capacity Total	Capacity Integ‡	Total Sys. KW**	ID SCFM	Capacity Total	Capacity Integ‡	Total Sys. KW**	ID SCFM	Capacity Total	Capacity Integ‡	Total Sys. KW**	ID SCFM	Capacity Total	Capacity Integ‡	Total Sys. KW**
Maximum Demand																																				
65 (18.3)		48.5	45	5.97		55.5	51	5.77		55.5	50.5	4.7		65	57.5	4.84		66	60.5	4.46		55.5	55.5	3.39		59	59	3.36		61	61	3.16
70 (21.1)	2000	49.5	45.5	6.31	1960	56	51	6.12	1800	55	50	4.36	1800	64.5	57.5	5.08	1800	66	60	4.74	1800	51.5	51.5	4.29	1800	58.5	58.5	3.56	1800	60.5	60.5	3.35
75 (23.9)		50	46	6.66		56.5	51.5	6.47		56	51	5.36		65	57.5	5.44		66	60	5.04		54.5	54.5	3.77		58	58	3.74		60	60	3.55
Median Demand																																				
65 (18.3)		26.4	24.2	2.71		30	27.6	2.56		33	30.2	2.38		37.2	33	2.31		32	29.2	1.77		29	29	1.53		32.8	32.8	1.59		35.4	35.4	1.59
70 (21.1)	1465	26.2	24	2.89	1455	29.6	27.2	2.69	1400	32.8	29.8	2.53	1400	36.8	32.8	2.44	1400	31.8	28.8	1.89	1330	28.6	28.6	1.64	1330	32.4	32.4	1.71	1330	35	35	1.7
75 (23.9)		26	24	3.07		29.6	27.2	2.89		32.6	29.6	2.68		36.6	32.6	2.59		31.4	28.6	2.02		28.4	28.4	1.77		32	32	1.82		34.6	34.6	1.8
Minimum Demand																																				
65 (18.3)		16.2	14.9	1.66		17.3	15.9	1.47		20.8	19	1.48		22.2	19.7	1.33		13.5	12.3	0.68		14.8	14.8	0.69		17.3	17.3	0.76		19.2	19.2	0.84
70 (21.1)	1200	15.9	14.6	1.75	1200	17	15.6	1.56	1200	20.6	18.8	1.58	1100	22	19.5	1.43	960	13.1	12	0.74	850	13.8	13.8	0.94	850	16.9	16.9	0.84	850	19.2	19.2	0.93
75 (23.9)		15.7	14.4	1.86		16.8	15.4	1.66		20.4	18.6	1.69		21.6	19.2	1.52		12.8	11.7	0.8		14.1	14.1	0.83		16.5	16.5	0.92		19.1	19.1	1.01

NOTES:
** The kW values include the compressor, outdoor fan motor, and indoor blower motor. The kW from supplement heaters should be added to these values to obtain Total Sys. kilowatts.
}The Btuh heating capacity values shown are net integrated values from which the defrost effect has been subtracted. The Btuh heating from supplement heaters should be added to those values to obtain Total Sys. capacity.
NOTE: When the required data falls between the published data, interpolation may be performed. Extrapolation is not an acceptable practice.
EDB — Entering Dry Bulb

Manufacturer reserves the right to change, at any time, specifications and designs without notice and without obligations.

HEAT PUMP HEATING PERFORMANCE - COMFORT MODE

INDOOR AIR °F (°C)	OUTDOOR ENTERING AIR TEMPERATURES °F (°C)																															
	-3 (-19.4)				7 (-13.9)				17 (-8.3)				27 (-2.8)				37 (2.7)				47 (8.3)				57 (13.9)				67 (19.4)			
EDB	ID SCFM	Capacity MBtuh Total	Capacity MBtuh Integ‡	Total Sys. KW**	ID SCFM	Capacity MBtuh Total	Capacity MBtuh Integ‡	Total Sys. KW**	ID SCFM	Capacity MBtuh Total	Capacity MBtuh Integ‡	Total Sys. KW**	ID SCFM	Capacity MBtuh Total	Capacity MBtuh Integ‡	Total Sys. KW**	ID SCFM	Capacity MBtuh Total	Capacity MBtuh Integ‡	Total Sys-tem KW**	ID SCFM	Capacity MBtuh Total	Capacity MBtuh Integ‡	Total Sys-tem KW**	ID SCFM	Capacity MBtuh Total	Capacity MBtuh Integ‡	Total Sys-tem KW**	ID SCFM	Capacity MBtuh Total	Capacity MBtuh Integ‡	Total Sys-tem KW**
Maximum Demand																																
65 (18.3)		48.5	44.5	5.97		55	50.5	5.76		55.5	50.5	4.73		65	57.5	4.84		66	60.5	4.44		64.5	64.5	4.2		59	59	3.35		61	61	3.14
70 (21.1)	1420	49	45	6.24	1550	55.5	51	6.12	1570	55.5	50.5	5.02	1700	65	57.5	5.12	1700	66	60	4.72	1700	64	64	4.42	1700	58.5	58.5	3.54	1700	60	60	3.31
75 (23.9)		50.5	46	6.73		56	51.5	6.46		56	51	5.4		65	57.5	5.44		66	60	5.01		63.5	63.5	4.68		58	58	3.74		59.5	59.5	3.5
Median Demand																																
65 (18.3)		29.6	27.4	3.26		34.8	32	3.15		35.4	32.2	2.65		40.5	35.8	2.59		34.8	31.6	1.98		35.6	35.6	1.99		36	36	1.79		39	39	1.76
70 (21.1)	980	29.8	27.4	3.55	1075	34.8	32	3.38	1035	35.2	32	2.82	1100	40	35.4	2.74	1100	34.4	31.4	2.09	1110	35.2	35.2	2.12	1125	35.6	35.6	1.93	1160	39	39	1.92
75 (23.9)		29.8	27.4	3.83		34.8	32	3.64		35	32	3		40	35.4	2.92		34.2	31	2.23		34.8	34.8	2.26		35.2	35.2	2.06		38.5	38.5	2.05
Minimum Demand																																
65 (18.3)		20.6	19	2.32		24.4	22.4	2.25		25.6	23.4	2.13		27	24	1.96		17.5	16	1.07		19	19	1.12		22.4	22.4	1.12		26.6	26.6	1.25
70 (21.1)	540	20.4	18.8	2.45	600	24.4	22.4	2.42	500	25.4	23.2	2.24	500	27	24	2.09	500	17.4	15.8	1.16	520	18.8	18.8	1.22	550	22.2	22.2	1.22	620	26.4	26.4	1.37
75 (23.9)		20.4	18.8	2.62		24.2	22.2	2.55		25.4	23.2	2.39		27	24	2.22		17.2	15.7	1.26		18.7	18.7	1.33		22	22	1.33		26.2	26.2	1.49

NOTES:

** The kW values include the compressor, outdoor fan motor, and indoor blower motor. The kW from supplement heaters should be added to these values to obtain Total Sys. kilowatts.

}The Btuh heating capacity values shown are net integrated values from which the defrost effect has been subtracted. The Btuh heating from supplement heaters should be added to those values to obtain Total Sys. capacity.

NOTE: When the required data falls between the published data, interpolation may be performed. Extrapolation is not an acceptable practice.

EDB — Entering Dry Bulb

Guide specifications
General

AIR-COOLED, SPLIT-SYSTEM HEAT PUMP
27VNA1
4.5 NOMINAL TONS

System Description

Outdoor-mounted, air-cooled, split-system heat pump unit suitable for ground or rooftop installation. Unit consists of a hermetic compressor, an air-cooled coil, forward-swept blade propeller-type condenser fan, and a control box. Unit will discharge supply air upward as shown on contract drawings. Unit will be used in a refrigeration circuit to match up to a packaged fan coil or coil unit.

Quality Assurance

- Unit will be rated in accordance with the latest edition of AHRI Standard 240.
- Unit will be certified for capacity and efficiency, and listed in the latest AHRI directory.
- Unit construction will comply with latest edition of ASHRAE and with NEC.
- Unit will be constructed in accordance with UL standards and will carry the UL label of approval. Unit will have C-UL approval.
- Unit cabinet will be capable of withstanding Federal Test Method Standard No. 141 (Method 6061) 500-hr salt spray test.
- Air-cooled condenser coils are pressure tested and the outdoor units are leak tested.
- Unit constructed in ISO9001 approved facility.

Delivery, Storage, and Handling

- Unit will be shipped as single package only and is stored and handled per unit manufacturer's recommendations.

Warranty (for inclusion by specifying engineer)

- U.S. and Canada only.

PRODUCTS

Equipment

- Factory-assembled, single-piece, air-cooled heat pump. Contained within the unit enclosure is all factory wiring, piping, controls, compressor, refrigerant charge Puron Advance™ (R-454B) refrigerant, and special features required prior to field start-up.

Unit Cabinet

- Unit cabinet will be constructed of galvanized steel, bonderized, and coated with a powder coat paint.

Fans

- Condenser fan will be direct-drive propeller type, forward swept blade, discharging air upward.
- Condenser fan motors will be totally enclosed, 1-phase type with class B insulation and permanently lubricated.
- Fan blades will be statically and dynamically balanced.
- Condenser fan openings will be equipped with coated steel wire safety guards.

Compressor

- Compressor will be hermetically sealed.
- Compressor will be mounted on rubber vibration isolators.
- Compressor will be covered with a sound absorbing blanket.

Condenser Coil

- Condenser coil will be air cooled.
- Coil will be constructed of aluminum fins mechanically bonded to copper or aluminum tubes which are then cleaned, dehydrated, and sealed.

Refrigeration Components

- Refrigeration circuit components will include liquid-line and vapor line front-seating shutoff valve with provisions for sweat or mechanical connections, system charge of Puron Advance™ (R-454B) refrigerant, PVE compressor oil, accumulator, electronic expansion valve, reversing valve, and pressure equalization valve.
- Unit will be equipped with high-pressure switch, suction and discharge pressure transducers, and filter drier for Puron Advance™ (R-454B) refrigerant.

Operating Characteristics

- The capacity of the unit will meet or exceed _____ Btuh at a suction temperature of _____ _F (_C). The power consumption at full load will not exceed _____ kW.
- Combination of the unit and the evaporator or fan coil unit will have a total net cooling capacity of _____ Btuh or greater at conditions of _____ CFM entering air temperature at the evaporator at _____ _F (_C) wet bulb and _____ _F (_C) dry bulb, and air entering the unit at _____ _F (_C).
- The system will have a SEER2 of _____ Btuh/watt or greater at DOE conditions.

Electrical Requirements

- Nominal unit electrical characteristics will be _____ v, single phase, 60 Hz. The unit will be capable of satisfactory operation within voltage limits of _____ v to _____ v.
- Unit electrical power will be single point connection.
- Control circuit will be 24v.

Special Features

- Refer to section of this literature identifying accessories and descriptions for specific features and available enhancements.
- Infinity® System Control with appropriate software version is required for full featured operation.

Manufacturer reserves the right to change, at any time, specifications and designs without notice and without obligations.

System Design Summary

1. System must be installed with factory approved R454B Indoor unit only.
2. Factory authorized dissipation control board must be installed with indoor unit.
3. Must use Infinity® System Control listed in pre-sale literature only
4. Intended for outdoor installation with free air inlet and outlet. Outdoor fan external static pressure available is less than 0.01-in. wc.
5. This product is qualified for low ambient cooling operation (below 55_F / 12.8_C) with an Infinity® System Control **ONLY**.
6. The maximum outdoor operating ambient in cooling mode is 125_F (51.7_C).
7. Minimum outdoor operating air temperature for heating mode is –23°F (–30.5°C).
8. For reliable operation, unit must be level in all horizontal planes.
9. For interconnecting refrigerant tube lengths greater than 80 ft (23.4 m) and/or elevation differences between indoor and outdoor units greater than 20 ft (6.1 m), consult Residential Piping and Long Line Guideline and Service Manual available from equipment distributor.
10. If any refrigerant tubing is buried, provide a 6 in. (152.4 mm) vertical rise to the valve connections at the unit. Refrigerant tubing lengths up to 36 in. (914.4 mm) may be buried without further consideration. Do not bury refrigerant lines longer than 36 in. (914.4 mm).
11. Use only copper wire for electrical connection at unit. Aluminum and clad aluminum are not acceptable for the type of connector provided.
12. Do not apply capillary tube indoor coils to these units.
13. Factory-supplied filter drier must be installed.

© 2026 Carrier. All rights reserved.
Edition Date: 04/26

Catalog No: 27VNA1-03PD

Replaces: 27VNA1-02PD

Manufacturer reserves the right to change, at any time, specifications and designs without notice and without obligations.