38MBRC
Outdoor Unit Single Zone Ductless System
Sizes 36 to 58

Carrier
Turn to the experts

Product Data

Fig. 1 — Size 36K

Fig. 2 — Sizes 48K - 58K

NOTE: Images are for illustration purposes only. Actual models may differ slightly.

INDUSTRY LEADING FEATURES / BENEFITS

A PERFECT BALANCE BETWEEN BUDGET LIMITS, ENERGY SAVINGS AND COMFORT

The **38MBRC** series ductless system is a matched combination of an outdoor condensing unit and an indoor fan coil unit connected only by refrigerant tubing and wires. The ductless system permits creative solutions for design problems such as:

- **Add-ons to current space (an office or family room addition)**
- **Special space requirements**
- **When adding air conditioning to spaces that are heated by hydronic or electric heat and have no ductwork**
- **Historical renovations or any application where preserving the look of the original structure is essential.**

Advanced system components incorporate innovative technology to provide reliable cooling and heating performance at low sound levels.

TABLE OF CONTENTS

PAGE

INDUSTRY LEADING FEATURES / BENEFITS 1
MODEL NUMBER NOMENCLATURE 3
STANDARD FEATURES AND ACCESSORIES. 4
SPECIFICATIONS 5
PERFORMANCE 6
DIMENSIONS 8
CLEARANCES. 11
COOLING PERFORMANCE - AIR HANDLER 12
HEATING PERFORMANCE - AIR HANDLER 13
COOLING PERFORMANCE - CASSETTE 14
HEATING PERFORMANCE - CASSETTE 15
COOLING PERFORMANCE - DUCTED. 16
HEATING PERFORMANCE - DUCTED. 17
COOLING PERFORMANCE - FLOOR CEILING & CONSOLE . 18
HEATING PERFORMANCE - FLOOR CEILING & CONSOLE . 19
APPLICATION DATA. 20
WIRING 21
SOUND PRESSURE IN OCTAVE BANDS 22
FAN AND MOTOR SPECIFICATIONS. 23
WIRING DIAGRAMS 24
GUIDE SPECIFICATIONS 26

Specifications subject to change without notice.

Inverter Technology

The inverter driven compressor is designed to run at various input power frequencies (Hz) which controls the compressor's motor speed.

Even Temperature – The control package, including the inverter, monitors the outdoor and indoor temperatures as they relate to the selected indoor set point and adjusts the compressor speed to match the load and keep the system operating continuously rather than cycling and creating temperature swings. This translates to higher comfort levels for the occupants.

Rapid Pull Down/Warm-Up – Comfort is increased by the inverter system's ability to ramp up the compressor speed enabling the system to reach the user selected room temperature set point quicker.

Humidity Control – Running the system for longer periods and continuously varying the compressor speed enhances the humidity control.

Individual Room Comfort

Maximum comfort is provided because each space can be controlled individually based on the usage pattern.

Low Sound Levels

When noise is a concern, ductless systems are the answer. When sound ordinances and proximity to neighbors demand quiet operation, the **38MBRC** unit is the right choice. With the inverter technology, these units run at lower speeds most of the time resulting in reduced sound levels.

Inverter Technology – Enhanced Economical Operation

Ductless systems are inherently economical to operate. Individual rooms are heated or cooled only when required, and since the air is delivered directly to the space, there is no need to use additional energy to move the air in the ductwork. This economical operation is enhanced further when the inverter system output matches the load resulting in a more efficient system.

Easy-To-Use Controls

The systems have microprocessor-based controls which provide the ultimate in comfort and efficiency. The user friendly wired and wireless remote controls provide the interface between the user and the unit.

Secure Operation

If security is an issue, outdoor and indoor units are connected only by refrigerant piping and wiring to prevent intruders from crawling through ductwork or wall openings. In addition, since the **38MBRC** can be installed close to an outside wall, coils are protected from vandals and severe weather.

Fast Installation

This compact ductless system is simple to install. Only wires and piping need to run between the indoor and outdoor units. These units are fast and easy to install ensuring minimal disruption to customers in homes or the workplace. This makes the **38MBRC** systems the equipment of choice for retrofit applications.

Simple Servicing and Maintenance

Removing the top panel (36K) or side panel (48K and 58K) of the outdoor unit provides immediate access to the control compartment, providing the service technician access to the diagnostic components to facilitate the troubleshooting process. In addition, the draw-thru design of the outdoor unit means that dirt accumulates on the outside surface of the coil. Coils can be cleaned quickly from the inside using a pressure hose and detergent.

On the indoor units, service and maintenance expense is reduced due to readily accessible filters. Also, error codes are displayed to alert the user to certain system malfunctions

Built-in Reliability

Ductless system indoor and outdoor units are designed to provide years of trouble-free operation. Both the indoor and outdoor units are well protected. Whenever the microprocessor detects abnormal conditions, the unit stops and an error code appears. Inverter systems provide additional reliability due to the soft start. This refers to the ability of the inverter to start the compressor motor using reduced voltage and reduced current. This feature is beneficial from an electrical standpoint (eliminates current spikes) as well as an overall reliability standpoint due to reduced stress on all associated system components.

Agency Listings

All systems are listed with AHRI (Air conditioning, Heating, and Refrigeration Institute) and are CSA C22.2 No. 60335-2-40 certified per UL 60335-2-40 standard.

Manufacturer reserves the right to change, at any time, specifications and designs without notice and without obligations.

MODEL NUMBER NOMENCLATURE

OUTDOOR UNIT

38 MB R C Q 36 A A 3

38 = OUTDOOR UNIT

MB = MODEL

SYSTEM TYPE
R = OUTDOOR

MAJOR SERIES

UNIT TYPE
Q = HEAT PUMP

NOMINAL CAPACITY
36 - 3 TONS
48 - 4 TONS
58 - 5 TONS

VOLTAGE
3 = 208/230-1-60

VARIATIONS
A = STANDARD

MAXIMUM NUMBER OF FAN COIL UNITS THAT CAN BE CONNECTED TO THE OUTDOOR UNIT
A = 1

Use of the AHRI Certified TM Mark indicates a manufacturer's participation in the program For verification of certification for individual products, go to www.ahridirectory.org.

STANDARD FEATURES AND ACCESSORIES

Table 1 — Standard Features

EASE OF INSTALLATION	
Low Voltage Controls	S
COMFORT FEATURES	
Microprocessor Control	S
Auto Restart Function	S
Auto Changeover	S
ENERGY SAVING FEATURES	
Inverter Driven Compressor	S
46° F Heating Mode (Heating Setback)	S
SAFETY AND RELIABILITY	S
3 Minute Time Delay For Compressor	S
High Compressor Discharge Temperature	S
Over Current Protection for Compressor	S
Low Voltage Protection	S
Compressor Overload Protection	S
Compressor Over Current Protection	S
IPM Module Protection	S
Condenser High Temperature Protection in Cooling Mode	
Aluminum Hydrophilic pre-coated fins	S
EASE OF SERVICE AND MAINTENANCE	
Diagnostics	S
Liquid Line Pressure Taps	S
APPLICATION FLEXIBILITY	
Crankcase Heater	S
Base pan Heater	S

LEGEND
S - Standard
A - Accessory

ACCESSORIES

Table 2 — Accessories

OUTDOOR UNIT MODEL NUMBER PER UNIT	BASE PAN BASE RUBBER PLUGS RCD PART NO.	QUANTITY PER UNIT
38MBRCQ36AA3	12600801A00117	5
38MBRCQ48AA3	12600801A00118	5
38MBRCQ58AA3		

NOTE: Basepan built in with multiple holes for proper draining during defrost. For applications where it is required to seal these holes, and redirect the condensate drain, rubber plugs are available through RCD.

Outdoor Units

Crankcase Heater

The crankcase heater is standard on all unit sizes.

Base pan Heater

The base pan heater is standard on all unit sizes.

Long Line Piping Length

Piping flexibility up to a total piping length of 213ft. (65m).

SPECIFICATIONS

Table 3 — Specifications

OUTDOOR - HEAT PUMP					
SYSTEM	**OUTDOOR SIZE**		**36K**	**48K**	**58K**
Electrical	Voltage, Phase, Cycle	V/Ph/Hz	208/230-1-60	208/230-1-60	208/230-1-60
	MCA	A.	30	35	35
	Recommended Fuse Size	A.	35	40	40
	MOCP - Fuse Rating	A.	50	50	50
Operating Range	Cooling Outdoor DB Min - Max	°F(°C)	-22~130 (-30~55)	-22~130 (-30~55)	-22~130 (-30~55)
	Heating Outdoor DB Min - Max	°F(°C)	-22~86 (-30~30)	-22~86 (-30~30)	-22~86 (-30~30)
Piping	Total Piping Length	ft (m)	213 (65)	213 (65)	213 (65)
	Piping Lift*	ft (m)	98 (30)	98 (30)	98 (30)
	Pipe Connection Size - Liquid	in (mm)	3/8 (9.52)	3/8 (9.52)	3/8 (9.52)
	Pipe Connection Size - Suction	in (mm)	5/8 (16)	5/8 (16)	7/8 (22)
Refrigerant	Type		R410A	R410A	R410A
	Charge	lbs (kg)	6.72 (3.05)	9.26 (4.2)	10.58 (4.8)
	Additional Refrigerant Charge (between standard and maximum Piping Lengths)	Oz/ft (g/m)	0.32 (30)	0.32 (30)	0.32 (30)
	Metering Device		EXV	EXV	EXV + Capillary
Outdoor Coil	Face Area	Sq. Ft.	8.0	13.6	26.7
	No. Rows		2	2	3
	Fins per inch		18	18	18
	Circuits		4	8	14
Compressor	Type		Rotary Inverter	Rotary Inverter	Rotary Inverter
	Model		ATF310D43UMT	ATQ420D1UMU	KTQ420D1UMU
	Oil Type		VG74	VG74	VG74
	Oil Charge	Fl. Oz.	28.2	39.5	47.4
	Rated Current	RLA	22.0	23.5	25.0
Airflow and Sound	Airflow	CFM	2,130	4,500	4,500
	Sound Pressure	dB(A)	63.0	62.5	61.2

* Condensing unit above or below the indoor unit

PERFORMANCE

Table 4 — Cassette

	OUTDOOR SIZE		36K	48K	58K
CASSETTE	INDOOR MODEL		36K	48K	
	Energy Star		NO	NO	
	Cooling System Tons		3.0	4.0	
	Cooling Rated Capacity	Btu/h	36,000	48,000	
	Cooling Cap. Range Min - Max	Btu/h	12,400~36,000	16,600~48,000	
	SEER		18.20	17.80	
	EER		9.00	9.50	
	Heating Rated Capacity (47°F)	Btu/h	38,000	50,000	
	Heating Rated Capacity (17°F)	Btu/h	23,000	28,000	
	Heating Maximum Capacity (17°F)	Btu/h	25,300	37,900	
	Heating Maximum Capacity (5°F)	Btu/h	22,300	30,200	
	Heating Cap. Range Min - Max	Btu/h	11,200~38,000	11,850~52,000	
	HSPF		10.6	11.5	
	COP (47°F)	W/W	3.01	3.10	
	COP (17°F)	W/W	1.90	1.80	
	COP (5°F)	W/W	2.02	1.92	

Table 5 — Ducted

	OUTDOOR SIZE		36K	48K	58K
DUCTED	INDOOR MODEL		36K	48K	58K
	Energy Star		NO	NO	NO
	Cooling System Tons		3.0	4.0	4.8
	Cooling Rated Capacity	Btu/h	36,000	48,000	57,000
	Cooling Cap. Range Min - Max	Btu/h	5,900~36,000	12,000~48,000	13,000~59,000
	SEER		16.7	17.4	18.0
	EER		9.0	9.2	10
	Heating Rated Capacity (47°F)	Btu/h	40,000	50,000	60,000
	Heating Rated Capacity (17°F)	Btu/h	27,000	29,000	35,400
	Heating Maximum Capacity (17°F)	Btu/h	25,000	29,000	35,400
	Heating Maximum Capacity (5°F)	Btu/h	22,000	32,000	35,000
	Heating Cap. Range Min - Max	Btu/h	12,700~40,000	11,600~50,000	12,000~61,000
	HSPF		11.5	10.3	10.0
	COP (47°F)	W/W	3.37	3.00	3.50
	COP (17°F)	W/W	2.63	2.57	2.50
	COP (5°F)	W/W	1.90	1.95	2.01

Manufacturer reserves the right to change, at any time, specifications and designs without notice and without obligations.

PERFORMANCE (CONT)

Table 6 — Console

	OUTDOOR SIZE		36K	48K	58K
	INDOOR MODEL		**36K**	**48K**	**58K**
CONSOLE	Energy Star		**NO**	**NO**	**NO**
	Cooling System Tons		3.0	4.0	4.5
	Cooling Rated Capacity	Btu/h	36,000	48,000	54,000
	Cooling Cap. Range Min - Max	Btu/h	11,400~36,000	15,800~48,000	15,000~54,000
	SEER		17	18	18
	EER		8	9.3	9.8
	Heating Rated Capacity (47°F)	Btu/h	38,000	50,000	60,000
	Heating Rated Capacity (17°F)	Btu/h	23,000	29,000	35,000
	Heating Maximum Capacity (17°F)	Btu/h	23,000	29,000	35,000
	Heating Maximum Capacity (5°F)	Btu/h	22,000	28,000	30,000
	Heating Cap. Range Min - Max	Btu/h	11,400~38,000	12,000~50,000	17,000~62,000
	HSPF		10.0	11.0	10.0
	COP (47°F)	W/W	2.8	2.5	3.0
	COP (17°F)	W/W	2.34	2.52	2.49
	COP (5°F)	W/W	1.80	1.95	1.90

Table 7 — Air Handler

	OUTDOOR SIZE		36K	48K	58K
	INDOOR MODEL		**36K**	**48K**	**58K**
AIR HANDLER	Energy Star		**NO**	**NO**	**NO**
	Cooling System Tons		3.0	4.0	4.8
	Cooling Rated Capacity	Btu/h	36,000	48,000	57,000
	Cooling Cap. Range Min - Max	Btu/h	11,600-41,000	11,800~51,900	11,000~60,000
	SEER		17	16.2	17
	EER		8.8	8.6	10
	Heating Rated Capacity (47°F)	Btu/h	38,000	55,000	60,000
	Heating Rated Capacity (17°F)	Btu/h	25,600	37,500	34,000
	Heating Maximum Capacity (17°F)	Btu/h	27,000	37,500	34,600
	Heating Maximum Capacity (5°F)	Btu/h	22,000	31,000	33,000
	Heating Cap. Range Min - Max	Btu/h	9,200-43,000	11,900~58,000	12,000~60,400
	HSPF		11.3	10.8	10.4
	COP (47°F)	W/W	3.35	3.03	3.2
	COP (17°F)	W/W	2.61	2.46	2.52
	COP (5°F)	W/W	1.90	1.75	1.81

Manufacturer reserves the right to change, at any time, specifications and designs without notice and without obligations.

DIMENSIONS

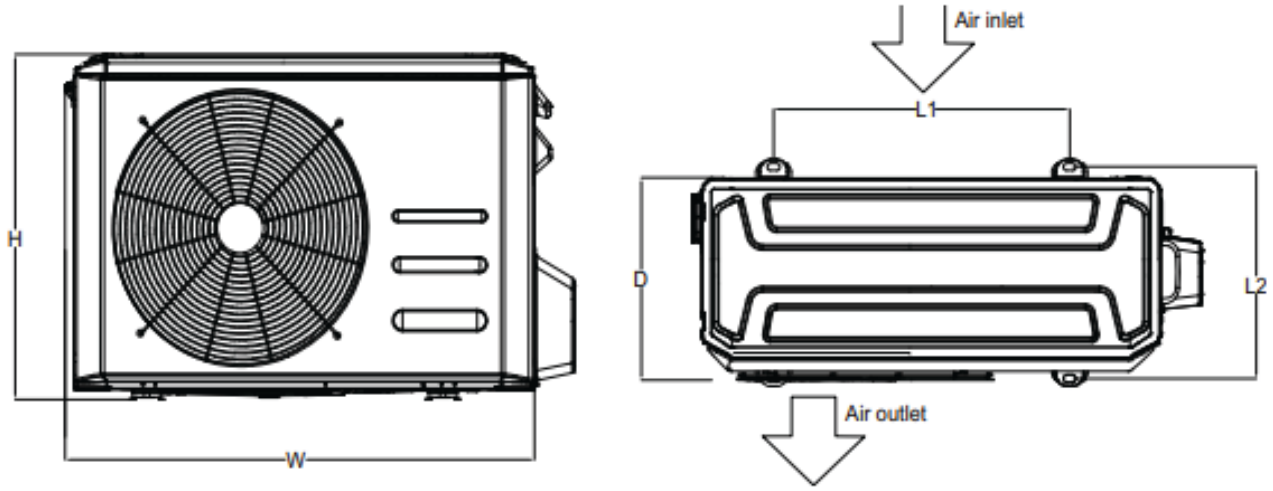

Fig. 3 — Dimensions

Table 8 — Dimensions (Inch/mm)

SIZE		36K	48K	58K
WIDTH (W)	in (mm)	37.24 (946)	37.48 (952)	37.48 (952)
HEIGHT (H)	in (mm)	31.89 (810)	52.48 (1333)	52.48 (1333)
DEPTH (D)	in (mm)	16.14 (410)	16.34 (415)	16.34 (415)
L1	in (mm)	26.50 (673)	24.96 (634)	24.96 (634)
L2	in (mm)	15.85 (403)	15.58 (396)	15.58 (396)
OPERATING WEIGHT	lbs (kg)	148.59 (67.4)	219.14 (99.4)	217.15 (98.5)
SHIPPING WIDTH	in (mm)	42.91 (1090)	43.11 (1095)	43.11 (1095)
SHIPPING HEIGHT	in (mm)	34.45 (875)	58.27 (1480)	58.27 (1480)
SHIPPING DEPTH	in (mm)	19.68 (500)	19.49 (495)	19.49 (495)
SHIPPING WEIGHT	lbs (kg)	160.94 (73)	249.12 (113)	248.24 (112.6)

Manufacturer reserves the right to change, at any time, specifications and designs without notice and without obligations.

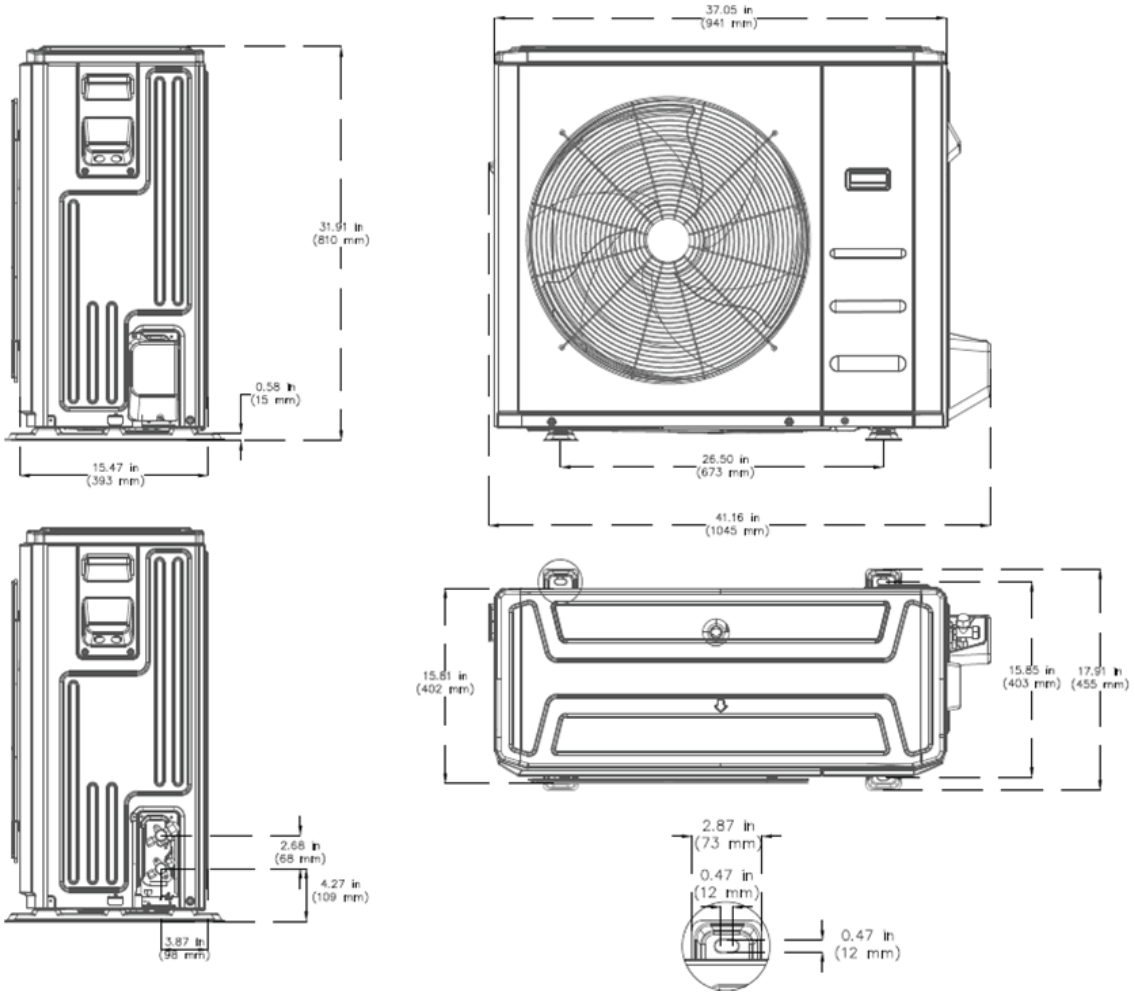

Fig. 4 — Outdoor Dimensions Size 36K

DIMENSIONS (CONT)

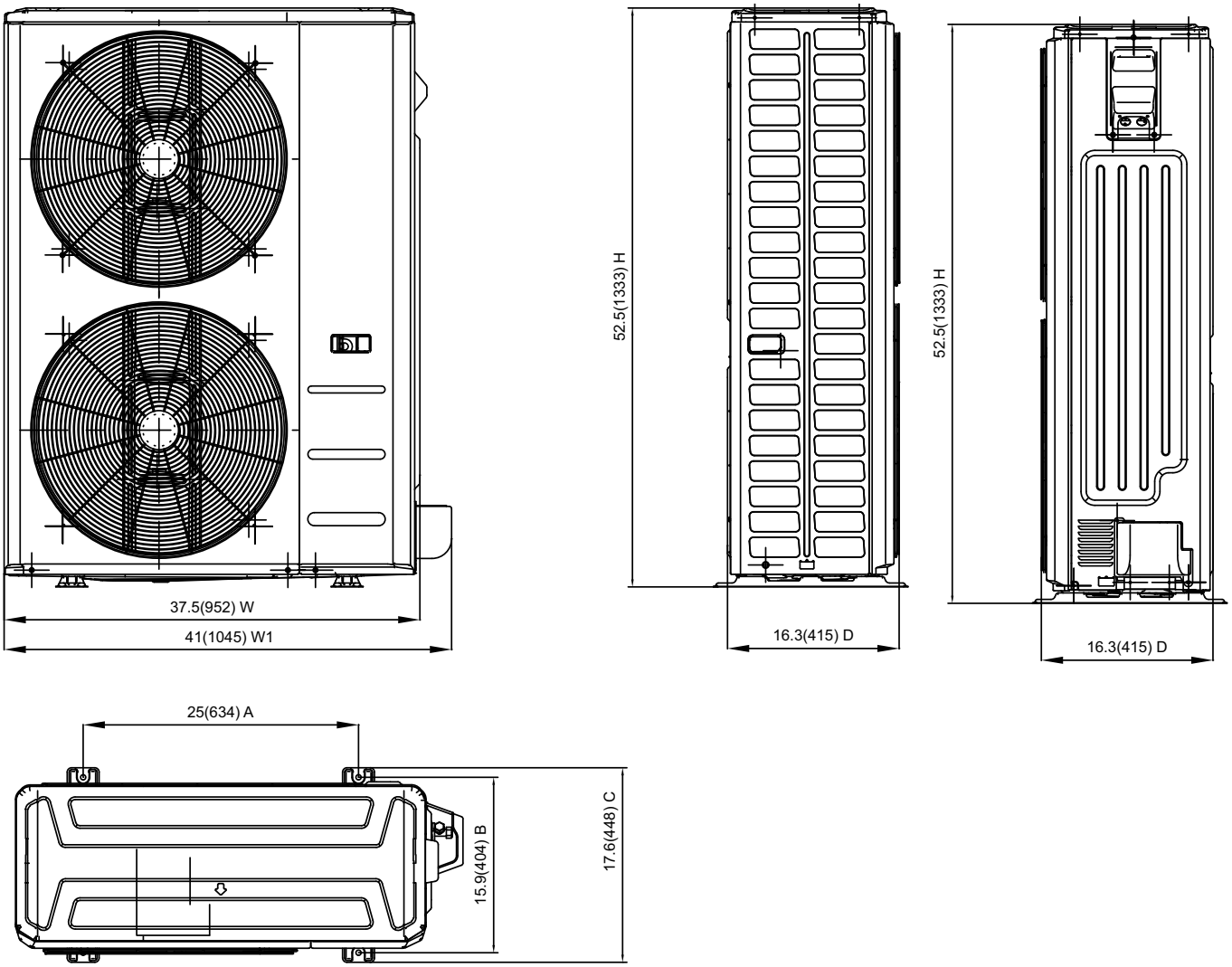

Fig. 5 — Outdoor Dimensions Sizes 48K and 58K

CLEARANCES

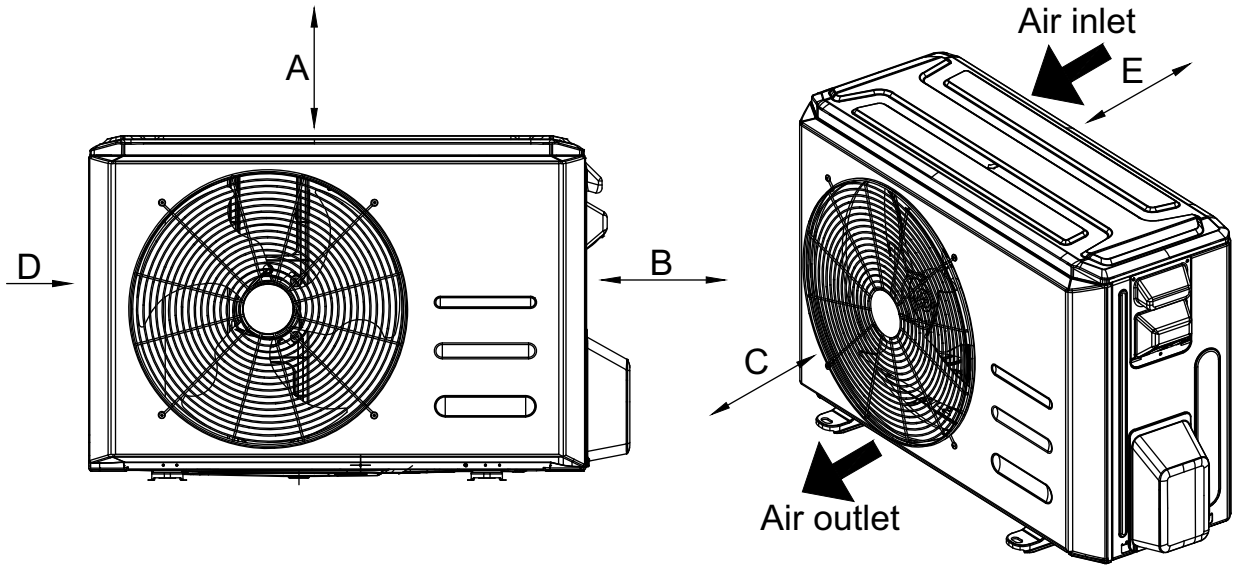

Fig. 6 — Clearances

Table 9 — Clearances

UNIT	MINIMUM VALUE in. (mm)
A	24 (610)
B	24 (610)
C	24 (610)
D	4 (101)
E	4 (101)

NOTE: The outdoor unit must be mounted at least 2in (50mm) above the maximum anticipated snow depth.

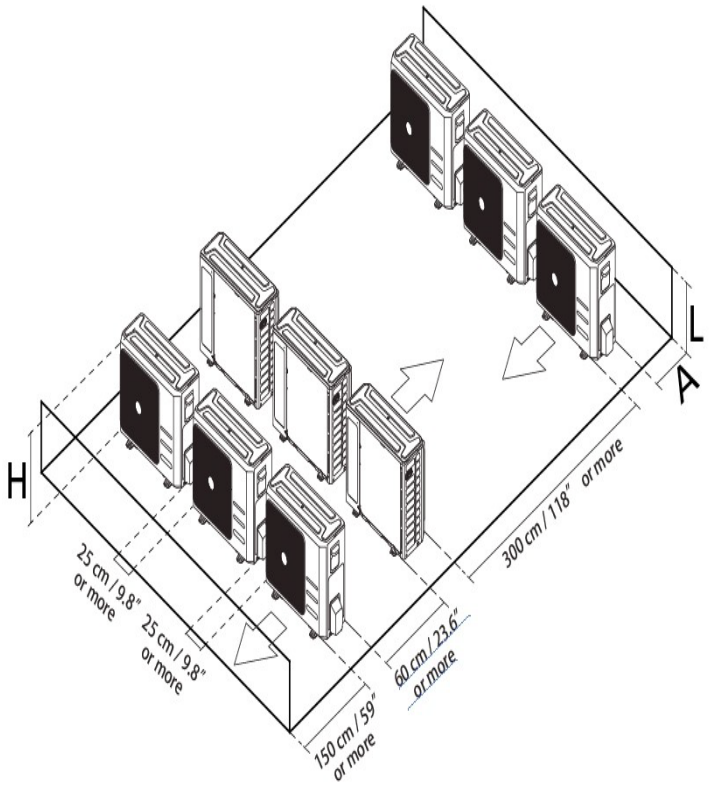

Fig. 7 — Clearances for multiple units

COOLING PERFORMANCE - AIR HANDLER

Table 10 — Cooling Performance - Air Handler

MODEL	COOLING			OUTDOOR CONDITIONS (DB)												
	Indoor Conditions DB			(-22°F) (-25°C)	-13°F (-25°C)	-4°F (-20°C)	0°F (-17°C)	5°F (-15°C)	17°F (-8°C)	47°F (8°C)	77°F (25°C)	86°F (30°C)	95°F (35°C)	104°F (40°C)	113°F (45°C)	122°F (50°C)
	DB	WB														
36K	69.8°F (21°C)	59°F (15°C)	TC	43.85	42.59	41.33	40.95	39.10	36.91	33.64	31.92	32.20	30.68	27.02	22.52	19.58
			SC	14.60	14.18	13.76	10.82	10.55	10.58	10.37	10.68	10.05	10.22	8.90	8.75	7.92
			Input	2.09	2.16	2.22	2.00	2.19	2.29	2.84	3.07	3.21	3.26	3.05	2.86	2.55
	75.2°F (24°C)	62.6°F (17°C)	TC	48.75	47.49	46.23	45.85	44.00	41.81	38.54	36.82	37.10	35.58	31.92	27.43	24.48
			SC	39.63	38.61	37.59	37.28	35.77	33.99	31.33	29.93	30.16	28.93	25.95	22.30	19.90
			Input	2.55	2.62	2.68	2.46	2.65	2.75	3.30	3.54	3.67	3.72	3.51	3.32	3.01
	80.6°F (27°C)	66.2°F (19°C)	TC	53.34	52.08	50.82	50.43	48.58	46.39	43.12	41.40	41.69	40.17	36.50	32.01	29.06
			SC	35.56	34.71	33.88	33.76	32.88	43.37	33.57	30.57	30.80	29.13	30.39	31.28	26.34
			Input	3.01	3.07	3.14	2.92	3.11	3.20	3.76	3.99	4.13	4.18	3.97	3.78	3.47
	89.6°F (32°C)	73.4°F (23°C)	TC	62.11	60.85	59.59	59.21	57.35	55.16	51.89	50.17	50.46	48.94	45.27	40.78	37.83
			SC	38.14	37.37	36.59	36.49	35.92	51.69	36.59	33.61	34.14	35.04	34.56	37.38	37.52
			Input	3.89	3.95	4.02	3.80	3.99	4.08	4.64	4.87	5.01	5.06	4.85	4.66	4.35
48K	69.8°F (21°C)	59°F (15°C)	TC	42.73	42.10	41.46	31.37	36.85	44.77	45.83	40.96	41.13	40.48	33.87	27.21	22.28
			SC	13.34	13.14	12.94	8.33	10.16	12.50	14.17	13.28	13.28	12.64	12.47	10.14	9.12
			Input	1.87	2.03	2.20	1.87	2.22	2.64	3.32	4.10	4.27	4.54	4.34	3.97	3.72
	75.2°F (24°C)	62.6°F (17°C)	TC	46.32	45.69	45.05	34.96	40.44	48.36	49.42	44.55	44.72	44.07	37.46	30.80	25.87
			SC	39.20	38.66	38.12	29.58	34.22	40.93	41.82	37.70	37.84	37.29	31.70	26.06	21.90
			Input	2.62	2.79	2.95	2.62	2.98	3.39	4.07	4.86	5.02	5.29	5.09	4.73	4.48
	80.6°F (27°C)	66.2°F (19°C)	TC	51.11	50.48	49.84	39.75	45.23	53.15	54.21	49.34	49.51	48.86	42.25	35.59	30.66
			SC	36.19	35.73	35.28	27.55	31.11	53.14	37.41	34.60	34.98	34.57	35.66	33.26	29.87
			Input	3.23	3.40	3.56	3.23	3.59	4.00	4.68	5.47	5.63	5.90	5.70	5.34	5.09
	89.6°F (32°C)	73.4°F (23°C)	TC	60.54	59.90	59.27	49.18	54.65	62.58	63.64	58.76	58.94	58.29	51.67	45.02	40.09
			SC	38.38	37.99	37.58	30.53	34.29	37.77	39.35	38.78	39.08	37.67	42.36	29.55	35.80
			Input	4.44	4.60	4.77	4.44	4.79	5.21	5.89	6.68	6.84	7.11	6.91	6.54	6.30
58K	69.8°F (21°C)	59°F (15°C)	TC	58.37	57.32	56.27	52.99	55.53	53.17	52.75	49.09	47.91	45.89	43.32	41.21	38.45
			SC	20.43	20.06	19.69	15.30	14.47	14.69	15.78	15.05	14.47	16.06	15.49	15.75	17.03
			Input	2.07	2.27	2.47	2.55	2.85	3.12	3.07	4.16	4.62	4.81	5.07	5.10	5.28
	75.2°F (24°C)	62.6°F (17°C)	TC	64.01	62.96	61.91	58.63	61.17	58.81	58.39	54.73	53.55	51.53	48.96	46.85	44.09
			SC	50.78	49.95	49.12	46.52	48.53	46.66	46.33	43.42	42.49	40.88	38.84	37.17	34.98
			Input	2.54	2.75	2.95	3.03	3.33	3.60	3.55	4.64	5.10	5.29	5.55	5.58	5.76
	80.6°F (27°C)	66.2°F (19°C)	TC	70.21	69.16	68.11	64.83	67.37	65.01	64.59	60.93	59.75	57.73	55.16	53.05	50.29
			SC	49.71	48.96	48.21	44.94	46.35	64.99	44.57	42.72	42.21	40.84	46.55	49.57	48.99
			Input	3.12	3.33	3.53	3.61	3.91	4.18	4.13	5.22	5.68	5.87	6.13	6.16	6.34
	89.6°F (32°C)	73.4°F (23°C)	TC	82.15	81.10	80.05	76.78	79.32	76.96	76.54	72.88	71.70	69.68	67.11	65.00	62.24
			SC	58.16	57.42	56.67	53.22	54.57	76.93	52.82	51.10	50.65	49.29	56.63	60.74	60.63
			Input	4.27	4.47	4.67	4.75	5.05	5.32	5.27	6.36	6.82	7.01	7.27	7.30	7.48

NOTE: Data highlighted in gray is extrapolated data and not actual test data. At 77°F outdoor conditions sweat protection activates causing a decrease in total capacity.

LEGEND:
DB --- Dry Bulb
WB --- Wet Bulb
TC --- Total Net Capacity (KBtu/hour)
SC --- Sensible Capacity (KBtu/hour)
Input --- Total Power (kW)

HEATING PERFORMANCE - AIR HANDLER

Table 11 — Heating Performance - Air Handler

MODEL	HEATING		OUTDOOR CONDITIONS (DB)											
	Indoor Conditions DB		-22°F (-30°C)	-13°F (-25°C)	-4°F (-20°C)	0°F (-17°C)	5°F (-15°C)	17°F (-8°C)	19.4°F (-7°C)	24.8°F (-4°C)	32°F (0°C)	39.2°F (4°C)	44.6°F (7°C)	53.6°F (12°C)
36K	59°F (15°C)	TC	11.65	15.14	18.63	20.18	22.12	26.78	27.09	27.79	28.72	34.56	41.57	46.24
		Input	3.21	3.15	3.09	3.06	3.03	2.94	2.95	2.97	3.00	3.13	3.28	3.39
		COP	1.06	1.41	1.77	1.93	2.14	2.67	2.69	2.74	2.81	3.24	3.71	4.00
	64.4°F (18°C)	TC	12.97	16.46	19.96	21.51	23.45	28.11	28.42	29.12	30.05	35.89	42.90	47.57
		Input	3.32	3.26	3.20	3.17	3.14	3.06	3.06	3.08	3.11	3.24	3.40	3.50
		COP	1.14	1.48	1.83	1.99	2.19	2.70	2.72	2.77	2.83	3.25	3.70	3.98
	69°F (20.5°C)	TC	14.10	17.59	21.09	22.64	24.58	29.24	29.55	30.25	31.18	37.02	44.02	48.70
		Input	3.21	3.15	3.09	3.06	3.03	2.94	2.95	2.97	3.00	3.13	3.28	3.39
		COP	1.29	1.64	2.00	2.17	2.38	2.91	2.93	2.98	3.05	3.47	3.93	4.21
	71.6°F (22°C)	TC	11.27	14.77	18.26	19.81	21.75	26.41	26.72	27.42	28.35	34.19	41.20	45.87
		Input	3.47	3.41	3.35	3.32	3.29	3.21	3.21	3.23	3.26	3.39	3.55	3.65
		COP	0.95	1.27	1.60	1.75	1.94	2.41	2.44	2.49	2.55	2.96	3.40	3.68
48K	59°F (15°C)	TC	24.53	25.63	26.12	27.94	29.46	38.97	39.81	41.71	44.25	49.24	54.30	57.50
		Input	4.54	4.42	4.34	4.28	4.65	5.06	5.07	5.10	5.14	5.12	5.07	5.03
		COP	1.58	1.70	1.76	1.91	1.86	2.26	2.30	2.40	2.52	2.82	3.14	3.35
	64.4°F (18°C)	TC	25.04	26.14	26.63	28.45	29.97	39.47	40.32	42.22	44.76	49.75	54.80	58.01
		Input	4.43	4.31	4.23	4.17	4.54	4.95	4.96	4.99	5.03	5.01	4.96	4.92
		COP	1.66	1.78	1.85	2.00	1.94	2.34	2.38	2.48	2.61	2.91	3.24	3.46
	69°F (20.5°C)	TC	25.47	26.57	27.06	28.88	30.40	39.91	40.75	42.65	45.19	50.18	55.24	58.44
		Input	4.33	4.21	4.13	4.07	4.44	4.85	4.86	4.89	4.93	4.91	4.86	4.82
		COP	1.73	1.85	1.92	2.08	2.01	2.41	2.46	2.56	2.69	3.00	3.33	3.55
	71.6°F (22°C)	TC	25.72	26.82	27.31	29.13	30.65	40.15	41.00	42.90	45.44	50.43	55.48	58.69
		Input	4.27	4.15	4.07	4.01	4.38	4.79	4.81	4.83	4.87	4.85	4.80	4.77
		COP	1.76	1.89	1.97	2.13	2.05	2.46	2.50	2.60	2.73	3.05	3.39	3.61
58K	59°F (15°C)	TC	30.07	31.46	32.85	33.47	34.24	36.09	36.85	38.57	40.86	49.42	59.20	65.97
		Input	5.27	5.18	5.09	5.05	5.00	4.88	4.87	4.86	4.85	4.97	5.14	5.22
		COP	1.67	1.78	1.89	1.94	2.01	2.17	2.22	2.33	2.47	2.91	3.38	3.70
	64.4°F (18°C)	TC	31.85	33.24	34.63	35.25	36.02	37.87	38.63	40.35	42.64	51.20	60.98	67.75
		Input	5.21	5.12	5.03	4.99	4.94	4.82	4.81	4.80	4.79	4.91	5.08	5.16
		COP	1.79	1.90	2.02	2.07	2.14	2.30	2.36	2.47	2.61	3.06	3.52	3.85
	69°F (20.5°C)	TC	33.36	34.75	36.14	36.76	37.53	39.38	40.14	41.86	44.15	52.71	62.49	69.26
		Input	5.15	5.06	4.97	4.93	4.88	4.76	4.75	4.74	4.73	4.85	5.02	5.10
		COP	1.90	2.01	2.13	2.19	2.25	2.42	2.48	2.59	2.74	3.19	3.65	3.98
	71.6°F (22°C)	TC	34.22	35.61	37.00	37.62	38.39	40.24	41.00	42.72	45.01	53.57	63.35	70.12
		Input	5.12	5.03	4.94	4.90	4.85	4.73	4.72	4.71	4.70	4.82	4.99	5.07
		COP	1.96	2.08	2.20	2.25	2.32	2.49	2.55	2.66	2.81	3.26	3.72	4.05

LEGEND:
DB --- Dry Bulb
TC --- Total Net Capacity (1000 Btu/hour)
Input --- Total Power (kW)
COP --- W/W

COOLING PERFORMANCE - CASSETTE

Table 12 — Cooling Performance - Cassette

MODEL	COOLING			OUTDOOR CONDITIONS (DB)												
	Indoor Conditions DB	Indoor Conditions WB		(-22°F) (-25°C)	-13°F (-25°C)	-4°F (-20C°)	0°F (-17°C)	5°F (-15°C)	17°F (-8°C)	47°F (8°C)	77°F (25°C)	86°F (30°C)	95°F (35°C)	104°F (40°C)	113°F (45°C)	122°F (50°C)
36K	69.8°F (21°C)	59°F (15°C)	TC	45.77	44.45	43.13	42.54	41.81	43.30	35.17	32.29	33.76	31.19	26.87	18.52	17.12
			SC	35.06	34.05	33.04	29.82	29.45	30.26	25.81	24.49	25.16	23.89	21.89	17.408	16.19
			Input	2.46	2.66	2.85	2.94	3.04	2.75	1.89	2.58	3.49	3.61	3.18	2.34	2.58
	75.2°F (24°C)	62.6°F (17°C)	TC	48.01	46.69	45.37	44.79	44.05	45.54	37.41	34.53	36.00	33.43	29.12	20.77	19.37
			SC	36.80	35.79	34.78	34.33	33.77	34.91	28.68	26.47	27.60	25.63	22.32	15.92	14.85
			Input	2.49	2.68	2.88	2.96	3.07	2.78	1.92	2.61	3.52	3.64	3.20	2.37	2.61
	80.6°F (27°C)	66.2°F (19°C)	TC	50.17	48.85	47.53	46.94	46.21	47.70	39.57	36.69	38.16	35.59	31.27	22.93	21.53
			SC	38.16	37.16	36.16	35.71	35.15	36.28	30.10	27.91	27.50	27.08	23.79	17.44	16.37
			Input	2.53	2.72	2.91	3.00	3.11	2.82	1.95	2.65	3.56	3.67	3.24	2.40	2.65
	89.6°F (32°C)	73.4°F (23°C)	TC	54.43	53.11	51.79	51.20	50.47	51.96	43.83	40.95	42.41	39.85	35.53	27.18	25.78
			SC	38.39	37.45	36.52	36.11	35.59	36.64	30.91	28.88	29.91	28.10	25.06	19.17	18.18
			Input	2.60	2.80	2.99	3.08	3.19	2.90	2.03	2.73	3.64	3.75	3.32	2.48	2.73
48K	69.8°F (21°C)	59°F (15°C)	TC	45.24	45.92	46.61	46.92	47.30	52.76	51.36	47.38	44.90	41.92	31.51	26.33	21.23
			SC	34.27	34.79	35.31	34.33	34.51	37.13	36.39	34.37	33.14	31.76	26.42	24.08	21.23
			Input	3.58	3.54	3.49	3.47	3.45	4.58	3.56	4.66	5.04	5.21	3.64	3.34	3.16
	75.2°F (24°C)	62.6°F (17°C)	TC	47.06	47.75	48.43	48.74	49.12	54.58	53.18	49.20	46.72	43.75	33.33	28.15	23.05
			SC	36.33	36.86	37.39	37.62	37.92	42.13	41.05	37.98	36.07	33.77	25.73	21.73	17.80
			Input	3.55	3.50	3.46	3.44	3.41	4.54	3.52	4.62	5.00	5.17	3.60	3.30	3.12
	80.6°F (27°C)	66.2°F (19°C)	TC	49.07	49.76	50.44	50.75	51.13	56.59	55.19	51.21	48.73	45.76	35.34	30.16	25.06
			SC	37.77	38.29	38.82	39.06	39.35	43.55	42.48	39.41	37.51	35.22	27.20	23.21	19.29
			Input	3.57	3.52	3.48	3.46	3.43	4.56	3.54	4.64	5.02	5.19	3.62	3.32	3.14
	89.6°F (32°C)	73.4°F (23°C)	TC	53.48	54.17	54.86	55.16	55.54	61.00	59.60	55.62	53.14	50.17	39.75	34.57	29.48
			SC	41.36	41.89	42.42	42.66	42.95	47.17	46.09	43.01	41.10	38.79	30.74	26.73	22.79
			Input	3.62	3.58	3.53	3.51	3.49	4.62	3.60	4.70	5.08	5.25	3.67	3.38	3.19

NOTE: Data highlighted in gray is extrapolated data and not actual test data. At 77°F outdoor conditions sweat protection activates causing a decrease in total capacity

LEGEND:
DB --- Dry Bulb
WB --- Wet Bulb
TC --- Total Net Cooling Capacity (kBTU/Hr))
SC --- Sensible Capacity (kBTU/Hr)
Input --- Total Power (kW)

HEATING PERFORMANCE - CASSETTE

Table 13 — Heating Performance - Cassette

MODEL	HEATING		OUTDOOR CONDITIONS (DB)											
	Indoor Conditions DB		-22°F (-30°C)	-13°F (-25°C)	-4°F (-20°C)	0°F (-17°C)	5°F (-15°C)	17°F (-8°C)	19.4°F (-7°C)	24.8°F (-4°C)	32°F (0°C)	39.2°F (4°C)	44.6°F (7°C)	53.6°F (12°C)
36K	59°F (15°C)	TC	12.70	16.90	23.58	25.86	27.17	31.15	31.40	34.02	34.80	38.02	37.63	47.87
		Input	3.08	3.35	3.84	3.94	3.91	3.77	3.77	3.88	3.51	3.60	3.48	3.97
		COP	1.21	1.48	1.80	1.92	2.04	2.42	2.44	2.57	2.91	3.10	3.17	3.53
	64.4°F (18°C)	TC	14.18	18.39	25.07	27.35	28.65	32.63	32.89	35.50	36.29	39.51	39.12	49.35
		Input	3.35	3.61	4.10	4.20	4.18	4.03	4.03	4.14	3.77	3.86	3.74	4.24
		COP	1.24	1.49	1.79	1.91	2.01	2.37	2.39	2.51	2.82	3.00	3.07	3.41
	69°F (20.5°C)	TC	15.45	19.65	26.33	28.61	29.92	33.90	34.15	36.77	37.55	40.77	40.38	50.62
		Input	3.08	3.35	3.84	3.94	3.91	3.77	3.77	3.88	3.51	3.60	3.48	3.97
		COP	1.47	1.72	2.01	2.13	2.24	2.64	2.65	2.78	3.14	3.32	3.40	3.74
	71.6°F (22°C)	TC	16.16	20.37	27.05	29.33	30.63	34.61	34.87	37.48	38.27	41.49	41.10	51.33
		Input	3.70	3.96	4.45	4.55	4.53	4.38	4.38	4.49	4.12	4.21	4.09	4.59
		COP	1.28	1.51	1.78	1.89	1.98	2.32	2.33	2.45	2.72	2.89	2.95	3.28
48K	59°F (15°C)	TC	14.19	18.98	28.54	26.42	32.38	46.98	43.86	48.91	51.23	54.45	57.66	57.24
		Input	3.74	4.14	4.75	4.30	4.73	5.47	5.13	5.28	5.38	5.15	4.94	4.22
		COP	1.11	1.34	1.76	1.80	2.01	2.52	2.51	2.71	2.79	3.10	3.42	3.98
	64.4°F (18°C)	TC	11.94	16.73	26.29	24.16	30.13	44.73	41.61	46.66	48.98	52.20	55.41	54.99
		Input	3.88	4.28	4.89	4.44	4.86	5.61	5.27	5.41	5.52	5.28	5.07	4.35
		COP	0.90	1.15	1.58	1.59	1.82	2.34	2.31	2.53	2.60	2.90	3.20	3.70
	69°F (20.5°C)	TC	10.02	14.81	24.37	22.25	28.21	42.81	39.69	44.74	47.07	50.28	53.49	53.07
		Input	4.00	4.39	5.01	4.56	4.98	5.73	5.39	5.53	5.64	5.40	5.19	4.47
		COP	0.73	0.99	1.43	1.43	1.66	2.19	2.16	2.37	2.45	2.73	3.02	3.48
	71.6°F (22°C)	TC	8.94	13.73	23.29	21.16	27.13	41.73	38.61	43.66	45.98	49.20	52.41	51.99
		Input	4.06	4.46	5.08	4.63	5.05	5.80	5.45	5.60	5.71	5.47	5.26	4.54
		COP	0.65	0.90	1.34	1.34	1.57	2.11	2.08	2.29	2.36	2.64	2.92	3.36

LEGEND
DB --- Dry Bulb
TH --- Total Net Heating Capacity (kBTU/Hr)
COP --- (W/W)
Input --- Total Power (kW)

COOLING PERFORMANCE - DUCTED

Table 14 — Cooling Performance - Ducted

MODEL	COOLING Indoor Conditions DB	WB		OUTDOOR CONDITIONS (DB) (-22°F) (-25°C)	-13°F (-25°C)	-4°F (-20°C)	0°F (-17°C)	5°F (-15°C)	17°F (-8°C)	47°F (8°C)	77°F (25°C)	86°F (30°C)	95°F (35°C)	104°F (40°C)	113°F (45°C)	122°F (50°C)
36K	69.8°F (21°C)	59°F (15°C)	TC	37.00	38.54	39.73	34.59	33.96	31.62	28.55	29.72	29.46	26.95	23.08	16.63	13.74
			SC	26.00	27.08	27.92	25.32	24.87	23.19	22.10	22.36	22.25	21.19	19.27	16.33	11.78
			Input	3.14	3.34	3.48	2.03	1.77	1.72	1.48	2.62	3.54	3.68	3.25	2.41	2.02
	75.2°F (24°C)	62.6°F (17°C)	TC	39.01	40.64	41.90	45.43	44.38	46.19	30.22	31.99	31.75	29.08	24.81	18.05	15.29
			SC	27.34	28.48	29.36	30.86	31.12	33.12	23.57	23.97	23.85	22.80	20.80	17.77	13.54
			Input	3.40	3.61	3.76	3.14	3.36	3.51	1.51	2.66	6.62	3.76	3.31	2.43	2.03
	80.6°F (27°C)	66.2°F (19°C)	TC	45.98	47.90	49.38	48.05	46.75	48.83	32.15	34.51	34.41	36.35	26.80	19.63	16.73
			SC	30.66	31.93	32.92	32.16	31.64	45.65	25.03	25.48	25.42	26.36	22.31	19.18	15.16
			Input	2.85	3.03	3.16	3.34	3.34	3.54	1.54	2.71	3.40	3.84	3.36	2.45	2.01
	89.6°F (32°C)	73.4°F (23°C)	TC	50.04	52.12	53.74	52.89	51.51	53.21	37.92	40.26	39.33	37.88	31.18	22.64	18.19
			SC	30.73	32.01	33.00	32.60	32.26	49.86	26.74	26.97	26.61	27.12	23.80	20.75	18.04
			Input	3.34	3.55	3.70	3.79	3.50	3.59	2.74	2.81	3.65	4.01	3.48	2.47	2.59
48K	69.8°F (21°C)	59°F (15°C)	TC	40.50	42.19	43.49	46.27	46.56	53.19	51.17	47.34	44.97	41.93	31.32	25.08	19.83
			SC	29.54	30.78	31.73	33.05	33.13	36.38	35.26	33.36	32.30	30.79	25.81	22.88	19.49
			Input	2.96	3.15	3.28	3.46	3.51	3.20	3.64	4.74	5.10	5.21	3.63	3.33	3.15
	75.2°F (24°C)	62.6°F (17°C)	TC	42.73	44.51	45.89	48.82	49.65	56.96	52.38	49.37	48.10	45.14	33.86	28.26	21.92
			SC	30.90	32.19	33.18	34.57	34.98	38.40	36.28	34.09	34.19	32.73	27.80	25.27	21.48
			Input	3.10	3.30	3.44	3.62	3.64	3.35	3.55	4.70	5.16	5.29	3.66	3.37	3.18
	80.6°F (27°C)	66.2°F (19°C)	TC	45.75	47.66	49.13	52.27	54.00	60.60	53.28	51.14	50.11	48.44	37.42	27.46	27.12
			SC	32.39	33.74	34.78	36.23	37.15	60.58	36.77	35.86	35.40	34.27	31.58	25.66	26.42
			Input	3.22	3.43	3.57	3.76	3.76	3.48	3.55	4.77	5.21	5.35	3.68	3.41	3.78
	89.6°F (32°C)	73.4°F (23°C)	TC	50.88	53.00	54.64	58.13	60.55	66.57	62.30	52.17	51.79	49.13	36.21	34.64	31.87
			SC	32.26	33.61	34.65	36.09	37.99	40.18	38.52	34.43	34.34	31.75	29.68	22.74	28.46
			Input	3.21	3.42	3.56	3.74	3.98	3.69	4.06	4.80	5.27	5.52	3.16	1.51	3.85
58K	69.8°F (21°C)	59°F (15°C)	TC	59.90	58.79	57.69	59.35	55.73	54.04	49.05	48.93	46.45	48.41	45.25	42.03	40.96
			SC	19.32	18.97	18.61	15.34	16.18	14.32	16.30	15.04	14.63	15.62	16.37	17.09	18.23
			Input	2.36	2.53	2.71	3.03	3.09	3.03	3.03	4.02	4.54	4.83	4.99	5.23	4.94
	75.2°F (24°C)	62.6°F (17°C)	TC	65.07	63.96	62.86	64.52	60.90	59.21	54.22	54.10	51.62	53.58	50.42	47.20	46.13
			SC	52.57	51.68	50.79	52.13	49.20	47.84	43.81	43.71	41.71	43.29	40.74	38.14	37.28
			Input	2.83	3.01	3.18	3.51	3.57	3.51	3.51	4.49	5.02	5.30	5.47	5.71	5.42
	80.6°F (27°C)	66.2°F (19°C)	TC	70.26	69.16	68.05	69.72	66.10	64.41	59.41	59.30	56.82	58.78	55.62	52.40	51.33
			SC	49.74	48.96	48.17	48.33	45.47	64.39	41.00	41.58	40.14	41.59	46.94	48.97	50.01
			Input	3.40	3.57	3.74	4.07	4.13	4.07	4.07	5.05	5.58	5.87	6.03	6.27	5.98
	89.6°F (32°C)	73.4°F (23°C)	TC	80.83	79.73	78.62	80.29	76.67	74.98	69.99	69.87	67.39	69.35	66.19	62.97	61.90
			SC	57.23	56.44	55.66	55.65	52.75	74.96	48.30	48.99	47.61	49.06	55.86	58.84	60.30
			Input	4.52	4.69	4.86	5.19	5.25	5.19	5.19	6.17	6.70	6.99	7.15	7.39	7.10

NOTE: Data highlighted in gray is extrapolated data, and not actual test data. At 77°F outdoor conditions, sweat protection activates causing a decrease in total capacity.

LEGEND:
DB --- Dry Bulb
WB --- Wet Bulb
TC --- Total Net Cooling Capacity (kBTU/Hr)
SC --- Sensible Capacity (kBTU/Hr)
Input --- Total Power (kW)

HEATING PERFORMANCE - DUCTED

Table 15 — Heating Performance - Ducted

MODEL	HEATING		OUTDOOR CONDITIONS (DB)											
	Indoor Conditions DB		-22°F (-30°C)	-13°F (-25°C)	-4°F (-20°C)	0°F (-17°C)	5°F (-15°C)	17°F (-8°C)	19.4°F (-7°C)	24.8°F (-4°C)	32°F (0°C)	39.2°F (4°C)	44.6°F (7°C)	53.6°F (12°C)
36K	59°F (15°C)	TC	16.57	20.69	24.67	29.09	29.65	33.78	31.88	36.97	39.83	42.76	45.55	46.06
		Input	3.99	4.12	4.23	4.27	4.27	4.20	3.90	4.24	4.29	3.89	3.86	3.44
		COP	1.22	1.47	1.71	2.00	2.03	2.36	2.40	2.55	2.72	3.23	3.46	3.92
	64.4°F (18°C)	TC	17.62	21.98	25.93	25.29	29.30	34.18	35.37	37.89	40.66	41.53	46.80	44.59
		Input	3.71	3.92	4.24	3.98	4.33	4.45	4.20	4.34	4.36	4.47	4.14	3.59
		COP	1.39	1.64	1.79	1.86	1.98	2.25	2.47	2.56	2.73	3.01	3.32	3.64
	69°F (20.5°C)	TC	17.36	21.82	25.57	27.29	28.77	34.82	34.71	37.73	39.63	41.37	45.84	43.62
		Input	3.73	4.07	4.33	4.55	4.47	4.50	4.33	4.52	4.50	4.23	4.28	3.72
		COP	1.36	1.57	1.73	1.76	1.89	2.27	2.35	2.45	2.58	2.87	3.14	3.44
	71.6°F (22°C)	TC	13.98	16.83	20.28	22.43	23.77	29.42	30.75	34.15	37.25	41.84	45.57	43.40
		Input	2.84	3.05	3.26	3.39	3.48	3.66	3.74	3.93	4.10	4.38	4.39	3.92
		COP	1.44	1.62	1.82	1.94	2.00	2.36	2.41	2.55	2.66	2.80	3.04	3.24
48K	59°F (15°C)	TC	20.68	26.76	33.02	28.15	39.50	46.28	46.40	49.18	56.48	61.03	57.65	57.16
		Input	5.01	5.15	5.13	4.43	5.37	5.45	5.21	5.82	5.40	5.48	4.93	4.20
		COP	1.21	1.52	1.89	1.86	2.16	2.49	2.61	2.48	3.07	3.26	3.43	3.99
	64.4°F (18°C)	TC	21.03	27.27	32.23	35.93	37.90	47.55	46.77	49.71	55.46	60.17	56.59	55.71
		Input	5.00	5.14	5.29	5.56	5.47	5.61	5.31	5.72	5.62	5.70	5.16	4.39
		COP	1.23	1.55	1.79	1.89	2.03	2.48	2.58	2.55	2.89	3.09	3.21	3.72
	69°F (20.5°C)	TC	21.36	27.76	31.52	35.38	36.91	45.68	45.87	50.60	54.40	58.94	56.11	54.67
		Input	4.90	5.01	5.52	5.75	5.68	5.68	5.46	5.56	5.81	5.89	5.39	4.55
		COP	1.28	1.62	1.67	1.80	1.90	2.36	2.46	2.67	2.74	2.93	3.05	3.52
	71.6°F (22°C)	TC	20.98	27.07	31.53	34.80	36.40	45.13	44.36	51.88	53.86	56.93	55.91	60.26
		Input	4.91	5.01	5.56	5.89	5.72	5.85	5.48	5.37	5.94	5.89	5.53	4.99
		COP	1.25	1.58	1.66	1.73	1.87	2.26	2.37	2.83	2.66	2.83	2.96	3.54
58K	59°F (15°C)	TC	28.06	29.83	31.60	32.39	33.37	35.73	36.82	39.27	42.54	51.16	60.49	66.41
		Input	3.17	3.63	4.08	4.28	4.53	5.14	5.08	4.96	4.80	4.70	4.67	4.62
		COP	2.59	2.41	2.27	2.22	2.16	2.04	2.12	2.32	2.60	3.19	3.80	4.21
	64.4°F (18°C)	TC	29.61	31.38	33.15	33.94	34.92	37.29	38.37	40.83	44.09	52.71	62.05	67.96
		Input	3.05	3.51	3.96	4.16	4.41	5.02	4.97	4.84	4.68	4.58	4.55	4.51
		COP	2.85	2.62	2.45	2.39	2.32	2.18	2.26	2.47	2.76	3.37	4.00	4.42
	69°F (20.5°C)	TC	30.94	32.71	34.48	35.26	36.25	38.61	39.70	42.15	45.42	54.04	63.37	69.29
		Input	2.95	3.41	3.86	4.06	4.31	4.92	4.86	4.74	4.58	4.48	4.45	4.41
		COP	3.07	2.81	2.62	2.55	2.47	2.30	2.39	2.61	2.91	3.54	4.17	4.60
	71.6°F (22°C)	TC	31.68	33.46	35.23	36.01	37.00	39.36	40.45	42.90	46.17	54.79	64.12	70.03
		Input	2.90	3.35	3.80	4.00	4.26	4.86	4.81	4.69	4.52	4.43	4.39	4.35
		COP	3.20	2.93	2.72	2.64	2.55	2.37	2.46	2.68	2.99	3.62	4.28	4.72

LEGEND:
DB --- Dry Bulb
TC --- Total Net Capacity (1000 Btu/hour)
Input --- Total Power (kW)
COP --- W/W

COOLING PERFORMANCE - FLOOR CEILING & CONSOLE

Table 16 — Cooling Performance - Floor Ceiling & Console

MODEL	COOLING Indoor Conditions DB	WB		OUTDOOR CONDITIONS (DB) (-22°F) (-25°C)	-13°F (-25°C)	-4°F (-20°C)	0°F (-17°C)	5°F (-15°C)	17°F (-8°C)	47°F (8°C)	77°F (25°C)	86°F (30°C)	95°F (35°C)	104°F (40°C)	113°F (45°C)	122°F (50°C)
36K	69.8°F (21°C)	59°F (15°C)	TC	39.20	38.11	37.02	36.54	35.93	35.93	32.13	30.43	31.19	28.54	24.66	17.78	16.34
			SC	29.71	28.88	28.06	25.71	25.38	25.42	23.45	22.55	22.87	21.63	19.75	16.13	15.06
			Input	2.68	2.88	3.07	3.16	3.27	2.56	1.34	2.51	3.41	3.53	3.14	2.33	2.55
	75.2°F (24°C)	62.6°F (17°C)	TC	41.40	40.31	39.22	38.74	38.13	38.13	34.34	32.64	33.40	30.74	26.86	19.98	18.55
			SC	31.45	30.62	29.79	29.42	28.96	28.96	26.08	24.79	25.37	23.35	20.40	15.18	14.09
			Input	2.74	2.94	3.13	3.22	3.33	2.62	1.40	2.58	3.47	3.59	3.20	2.39	2.61
	80.6°F (27°C)	66.2°F (19°C)	TC	43.64	42.55	41.46	40.98	40.37	40.37	36.57	34.87	35.63	32.98	29.10	22.22	20.78
			SC	32.84	32.02	31.20	30.84	30.38	30.38	27.52	26.24	26.81	24.82	21.90	16.72	15.64
			Input	2.80	3.00	3.20	3.28	3.39	2.68	1.47	2.64	3.53	3.65	3.26	2.45	2.67
	89.6°F (32°C)	73.4°F (23°C)	TC	47.97	46.88	45.79	45.30	44.70	44.70	40.90	39.20	39.96	37.30	33.43	26.54	25.11
			SC	33.31	32.56	31.80	31.47	31.05	31.04	28.41	27.23	27.75	25.91	23.22	18.44	17.44
			Input	2.92	3.12	3.32	3.40	3.51	2.80	1.59	2.76	3.65	3.77	3.38	2.57	2.79
48K	69.8°F (21°C)	59°F (15°C)	TC	36.82	37.54	38.26	38.58	38.99	42.49	44.56	46.09	43.65	40.64	32.07	26.61	21.82
			SC	28.37	28.93	29.48	30.37	30.57	32.30	33.00	33.78	32.65	31.32	27.23	24.64	21.82
			Input	5.29	4.11	2.93	2.41	1.75	1.67	2.42	4.56	4.95	5.06	3.57	3.28	3.10
	75.2°F (24°C)	62.6°F (17°C)	TC	39.15	39.87	40.59	40.91	41.31	44.82	46.88	48.42	45.98	42.97	34.40	28.94	24.14
			SC	30.35	30.90	31.46	31.71	32.02	34.74	36.35	37.53	35.64	33.31	26.66	22.43	18.72
			Input	5.35	4.17	2.99	2.47	1.82	1.74	2.48	4.62	5.01	5.13	3.63	3.34	3.16
	80.6°F (27°C)	66.2°F (19°C)	TC	41.95	42.67	43.39	43.71	44.12	47.62	49.69	51.22	48.78	45.77	37.20	31.74	26.95
			SC	32.26	32.81	33.37	33.61	33.92	36.62	38.21	39.39	37.51	35.20	28.61	24.41	20.72
			Input	5.43	4.25	3.07	2.55	1.90	1.82	2.56	4.70	5.09	5.21	3.71	3.42	3.24
	89.6°F (32°C)	73.4°F (23°C)	TC	47.67	48.39	49.11	49.43	49.83	53.34	55.41	56.94	54.50	51.49	42.92	37.46	32.67
			SC	36.82	37.38	37.94	38.19	38.50	41.20	42.80	43.99	42.10	39.78	33.16	28.94	25.24
			Input	5.60	4.42	3.24	2.72	2.06	1.98	2.72	4.87	5.26	5.37	3.88	3.59	3.40
58K	69.8°F (21°C)	59°F (15°C)	TC	61.16	59.66	58.17	62.05	53.68	52.12	49.68	45.80	43.17	42.95	40.51	37.34	37.33
			SC	20.14	19.65	19.16	16.15	14.60	13.46	15.90	14.66	14.06	14.15	14.83	15.37	15.64
			Input	2.54	2.67	2.80	3.44	3.13	2.69	2.79	3.85	4.14	4.34	4.52	4.58	4.64
	75.2°F (24°C)	62.6°F (17°C)	TC	65.06	63.57	62.07	65.95	57.58	56.02	53.58	49.71	47.07	46.86	44.41	41.24	41.23
			SC	53.41	52.19	50.96	54.14	47.27	45.99	43.99	40.81	38.65	38.47	36.46	33.86	33.85
			Input	3.16	3.29	3.42	4.06	3.75	3.31	3.41	4.47	4.76	4.96	5.14	5.20	5.26
	80.6°F (27°C)	66.2°F (19°C)	TC	69.60	68.11	66.61	70.49	62.12	60.56	58.12	54.25	51.61	51.40	48.95	45.78	45.77
			SC	53.54	52.39	51.24	54.22	47.78	46.58	44.71	41.73	39.70	39.54	37.65	35.22	35.21
			Input	3.75	3.88	4.01	4.66	4.34	3.90	4.00	5.06	5.35	5.55	5.74	5.80	5.85
	89.6°F (32°C)	73.4°F (23°C)	TC	78.88	77.38	75.89	79.77	71.40	69.84	67.40	63.52	60.89	60.67	58.23	55.06	55.05
			SC	60.68	59.52	58.38	61.36	54.92	53.72	51.85	48.86	46.84	46.67	44.79	42.35	42.35
			Input	4.92	5.04	5.17	5.82	5.50	5.06	5.16	6.23	6.51	6.71	6.90	6.96	7.02

NOTE: Data highlighted in gray is interpolated data and not actual test data. At 77°F outdoor conditions sweat protection activates causing a decrease in total capacity.

LEGEND
DB --- Dry Bulb
WB --- Wet Bulb
TC --- Total Net Colling Capacity (kBTU/Hr)
SC --- Sensible Capacity (kBTU/Hr)
Input --- Total Power (kW)

HEATING PERFORMANCE - FLOOR CEILING & CONSOLE

Table 17 — Heating Performance - Floor Ceiling & Console

MODEL	HEATING		OUTDOOR CONDITIONS (DB)											
	Indoor Conditions DB		-22°F (-30°C)	-13°F (-25°C)	-4°F (-20°C)	0°F (-17°C)	5°F (-15°C)	17°F (-8°C)	19.4°F (-7°C)	24.8°F (-4°C)	32°F (0°C)	39.2°F (4°C)	44.6°F (7°C)	53.6°F (12°C)
36K	59°F (15°C)	TC	10.96	18.65	23.62	25.76	26.80	32.63	31.35	31.63	35.95	38.68	37.63	43.42
		Input	3.10	3.61	3.87	4.03	4.02	3.96	3.94	4.16	4.04	3.92	3.75	3.65
		COP	1.04	1.51	1.79	1.87	1.95	2.41	2.33	2.23	2.61	2.89	2.94	3.49
	64.4°F (18°C)	TC	13.52	21.21	26.17	28.31	29.36	35.19	33.91	34.18	38.50	41.24	40.19	45.97
		Input	3.46	3.98	4.23	4.39	4.38	4.32	4.30	4.52	4.40	4.28	4.11	4.01
		COP	1.15	1.56	1.81	1.89	1.96	2.39	2.31	2.22	2.56	2.82	2.87	3.36
	69°F (20.5°C)	TC	13.09	20.78	25.74	27.89	28.93	34.76	33.48	33.75	38.07	40.81	42.36	45.55
		Input	3.10	3.61	3.87	4.03	4.02	3.96	3.94	4.16	4.04	3.92	3.75	3.65
		COP	1.24	1.69	1.95	2.03	2.11	2.57	2.49	2.38	2.76	3.05	3.31	3.66
	71.6°F (22°C)	TC	16.92	24.61	29.58	31.72	32.76	38.59	37.31	37.59	41.90	44.64	43.59	49.38
		Input	3.94	4.46	4.71	4.87	4.86	4.80	4.78	5.00	4.88	4.76	4.59	4.49
		COP	1.26	1.62	1.84	1.91	1.98	2.36	2.29	2.20	2.52	2.75	2.78	3.22
48K	59°F (15°C)	TC	15.94	18.36	26.93	34.79	37.24	45.50	47.21	51.31	53.56	55.66	58.30	57.70
		Input	3.84	3.98	4.45	4.94	5.11	5.16	5.34	5.78	5.59	5.33	4.99	4.24
		COP	1.22	1.35	1.77	2.06	2.14	2.58	2.59	2.60	2.81	3.06	3.42	3.99
	64.4°F (18°C)	TC	18.42	20.84	29.42	37.27	39.72	47.98	49.69	53.79	56.05	58.14	60.78	60.18
		Input	3.99	4.13	4.59	5.09	5.25	5.31	5.49	5.93	5.74	5.48	5.14	4.39
		COP	1.35	1.48	1.88	2.15	2.22	2.65	2.65	2.66	2.86	3.11	3.47	4.02
	69°F (20.5°C)	TC	20.53	22.95	31.53	39.39	41.83	50.10	51.81	55.91	58.16	60.26	62.89	53.01
		Input	4.11	4.26	4.72	5.22	5.38	5.44	5.62	6.06	5.87	5.61	5.27	4.50
		COP	1.46	1.58	1.96	2.21	2.28	2.70	2.70	2.70	2.90	3.15	3.50	3.45
	71.°6F (22°C)	TC	21.73	24.15	32.73	40.58	43.03	51.29	53.00	57.10	59.36	61.45	64.09	63.49
		Input	4.19	4.33	4.79	5.29	5.45	5.51	5.69	6.13	5.94	5.68	5.34	4.59
		COP	1.52	1.63	2.00	2.25	2.31	2.73	2.73	2.73	2.93	3.17	3.52	4.05
58K	59°F (15°C)	TC	22.49	25.55	28.61	29.97	31.66	35.74	35.44	34.78	33.89	43.31	55.90	64.13
		Input	4.35	4.45	4.56	4.61	4.67	4.81	4.77	4.67	4.55	4.82	5.24	5.51
		COP	1.52	1.68	1.84	1.91	1.99	2.18	2.18	2.18	2.18	2.63	3.13	3.41
	64.4°F (18°C)	TC	24.97	28.03	31.09	32.45	34.15	38.22	37.93	37.26	36.37	45.79	58.38	66.61
		Input	4.57	4.68	4.79	4.84	4.90	5.04	5.00	4.90	4.78	5.05	5.47	5.74
		COP	1.60	1.76	1.90	1.96	2.04	2.22	2.22	2.23	2.23	2.66	3.13	3.40
	69°F (20.5°C)	TC	27.09	30.14	33.20	34.56	36.26	40.34	40.04	39.37	38.48	47.91	60.50	68.72
		Input	4.35	4.45	4.56	4.61	4.67	4.81	4.77	4.67	4.55	4.82	5.24	5.51
		COP	1.83	1.99	2.13	2.20	2.28	2.46	2.46	2.47	2.48	2.91	3.38	3.66
	71.6°F (22°C)	TC	22.06	25.12	28.18	29.53	31.23	35.31	35.01	34.35	33.46	42.88	55.47	63.70
		Input	4.88	4.99	5.09	5.14	5.20	5.34	5.30	5.21	5.08	5.35	5.77	6.04
		COP	1.32	1.48	1.62	1.68	1.76	1.94	1.94	1.93	1.93	2.35	2.82	3.09

LEGEND
DB --- Dry Bulb
TH --- Total Net Heating Capacity (kBTU/Hr)
COP --- (W/W)
Input --- Total Power (kW)

APPLICATION DATA

UNIT SELECTION

Select equipment that either matches or supports slightly more than the anticipated peak load. This provides better humidity control, fewer unit cycles, and less part−load operation.

For units used in spaces with high sensible loads, base equipment selection on unit sensible load, not on total anticipated load. Adjust for anticipated room wet bulb temperature to avoid undersizing the equipment.

UNIT MOUNTING (OUTDOOR)

Refer to the unit's installation instructions for further details.

Unit leveling − For reliable operation, the units should be level in all planes.

Clearance − Minimum clearance (see Fig. 6 — on page 11) must be provided for airflow and service. The condensing units are designed for free−flow
application. Air inlets and outlets should not be restricted.

Unit location − A location which is convenient to installation and not exposed to strong winds. A location that can bear the weight of the outdoor unit and where the outdoor unit can be mounted in a level position.

Do not install the indoor or outdoor units in a location with special environmental conditions. For those applications, contact your sales representative.

SYSTEM OPERATING CONDITIONS

Refer to the Specifications table (Table 3 on page 5) for operating range.

METERING DEVICES

The outdoor unit has an electronic expansion valve to manage the refrigerant flow of the connected fan coil.

DRAIN CONNECTIONS

Install the drains in accordance with the local sanitation codes.

REFRIGERANT LINES

General refrigerant line sizing:

1. The outdoor units are shipped with a full charge of R410A refrigerant. All charges, line sizing, and capacities are based on runs of 25 ft. (7.6 m).
2. Refrigerant lines should not be buried in the ground. If it is necessary to bury the lines, do not bury the lines more than 36−in (914 mm). Provide a minimum 6−in (152 mm) vertical rise to the service valves to prevent refrigerant migration.
3. Both lines must be insulated. Use a minimum of 1/2−in. (12.7 mm) thick insulation. Closed−cell insulation is recommended in all applications.
4. Special consideration should be given to isolating the interconnecting tubing from the building structure. Isolate the tubing so vibration or noise is not transmitted into the structure.

Long Line Applications:

1. No change in line sizing is required.
2. Add refrigerant per the Additional Charge requirements in Table 3 on page 5.

Manufacturer reserves the right to change, at any time, specifications and designs without notice and without obligations.

WIRING

All wires must be sized per NEC (National Electrical Code) or CEC (Canadian Electrical Code) and local codes. Use Electrical Data table MCA (minimum circuit amps) and MOCP (maximum over current protection) to correctly size the wires and the disconnect fuse or breakers respectively.

SIZES 36-48 RECOMMENDED CONNECTION METHOD FOR POWER AND COMMUNICATION WIRING

Power and Communication Wiring: The main power is supplied to the outdoor unit. The field supplied power wiring from the outdoor unit to the indoor unit consists of three (3) wires and provides the power for the indoor unit. Two wires are high voltage AC power and one is a ground wire. To minimize voltage drop, the factory recommended wire size is 14/2 stranded with a ground.

Communication Wiring: A separate shielded stranded copper conductor only, with a 600 volt rating and double insulated copper wire, must be used as the communication wire from the outdoor unit to the indoor unit.

NOTE: Use a separate shielded 16GA stranded control wire.

Table 18 — Wiring Sizes 36K-58K

CABLE	CABLE SIZE	REMARKS
Power Connection Cable	14AWG	2 wire + Ground 1Φ 208/230 V
Communication Cable	16AWG	2 wire stranded shielded control wire

WARNING

EQUIPMENT DAMAGE HAZARD
Failure to follow this caution may result in equipment damage or improper operation. Wires should be sized based on NEC and local codes.

CAUTION

EQUIPMENT DAMAGE HAZARD
Failure to follow this caution may result in equipment damage or improper operation. Be sure to comply with local codes while running wire from the indoor unit to the outdoor unit. Every wire must be connected firmly. Loose wiring may cause the terminal to overheat or result in unit malfunction. A fire hazard may also exist. Ensure all wiring is tightly connected.
No wire should touch the refrigerant tubing, compressor or any moving parts. Disconnecting means must be provided and shall be located within sight and readily accessible from the air conditioner. Connecting cable with conduit shall be routed through the hole in the conduit panel.

NOTE: The main power is supplied to the outdoor unit. When disconnecting the power of the outdoor unit, the indoor unit would lose power. A disconnect switch is not required on the Indoor unit side on the wiring between the Outdoor and Indoor unit. A 3 pole disconnect may be used for extra protection between the Indoor and Outdoor Unit. A separate power is required for an Auxiliary Electric Heater.

Manufacturer reserves the right to change, at any time, specifications and designs without notice and without obligations.

SOUND PRESSURE IN OCTAVE BANDS

Table 19 — Sound Pressure in Octave Bands

SIZE	FREQUENCY (RPM)	63	125	250	500	1000	2000	4000	8000
36K	Cooling dB(A)	51.3	59.2	56.3	51.3	49.4	46.8	42.6	35.7
	Heating dB(A)	53.8	62.3	60.8	53.7	52.0	48.4	45.8	37.8
48K	Cooling dB(A)	59.2	61.6	55.9	58.1	59.6	51.9	47.8	43.8
	Heating dB(A)	65.1	66.1	61.3	59.7	58.2	54.1	47.5	43.6
58K	Cooling dB(A)	44.9	50.5	53.1	58.1	57.3	53.9	47.5	44.0
	Heating dB(A)	43.7	47.7	52.2	56.3	56.4	54.3	47.7	44.2

OUTDOOR UNIT SOUND PRESSURE TEST CONDITIONS

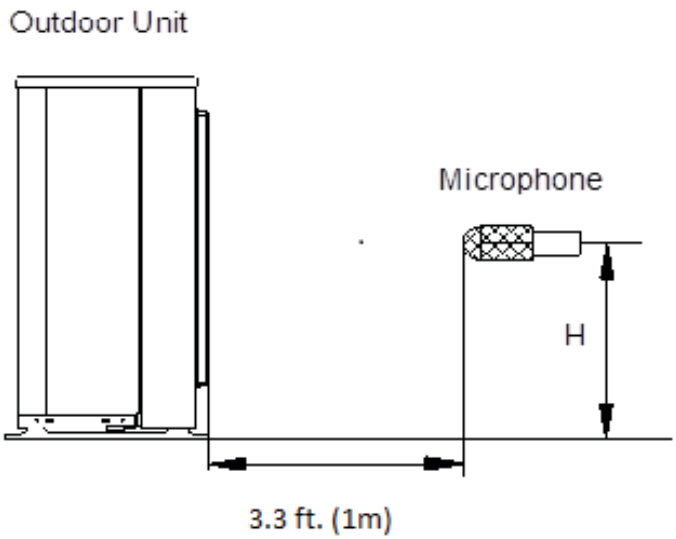

Fig. 8 — Outdoor Unit Sound Pressure Test Conditions

NOTE: H=0.5 x Height of outdoor unit

Table 20 — Outdoor Unit Sound Pressure Test Conditions

	INDOOR CONDITION		OUTDOOR CONDITION	
	DB	WB	DB	WB
COOLING	80.6°F (27°C)	66.2°F (19°C)	95°F (35°C)	75.2°F (24°C)
HEATING	68°F (20°C)	59°F (15°C)	44.6°F (7°C)	42.8°F (6°C)

FAN AND MOTOR SPECIFICATIONS

Table 21 — Fan and Motor Specifications

SYSTEM SIZE			36K	48K	58K
OUTDOOR FAN PROPELLER	Material	--	Acrylonitrile Styrene +20%GF		
	Type	--	ZL-560*139*12-3KN	ZL-554*148*12-3KFN	ZL-554*148*12-3KFN
	Diameter	In (mm)	22.05(560)	21.81(554)	21.81(554)
	Height	In (mm)	5.47(139)	5.83(148)	5.83(148)
OUTDOOR FAN MOTOR	Model	--	WZDK120-38G-W	ZKFN-85-8-22	ZKFN-85-8-22-5
	Type	--	DC	DC	DC
	Phase	--	1	1	1
	FLA	A	1.21	1.17	1.5
	Insulation Class	--	E	E	E
	Safe Class	--	IPX0	IPX0	IPX4
	Input	W	150	126	126
	Output	W	120	85	85
	Range of current	A	1.21±10%	1.17±10%	1.036±10%
	Rated current	A	1.21	1.17	1.036
	Rated HP	HP	0.16	0.14	0.11
	Speed	rev/min	850/800/750	900/850/750	850/750/650
	Rated RPM	rev/min	1050	900	900
	Max. input	W	150	126	126

WIRING DIAGRAMS

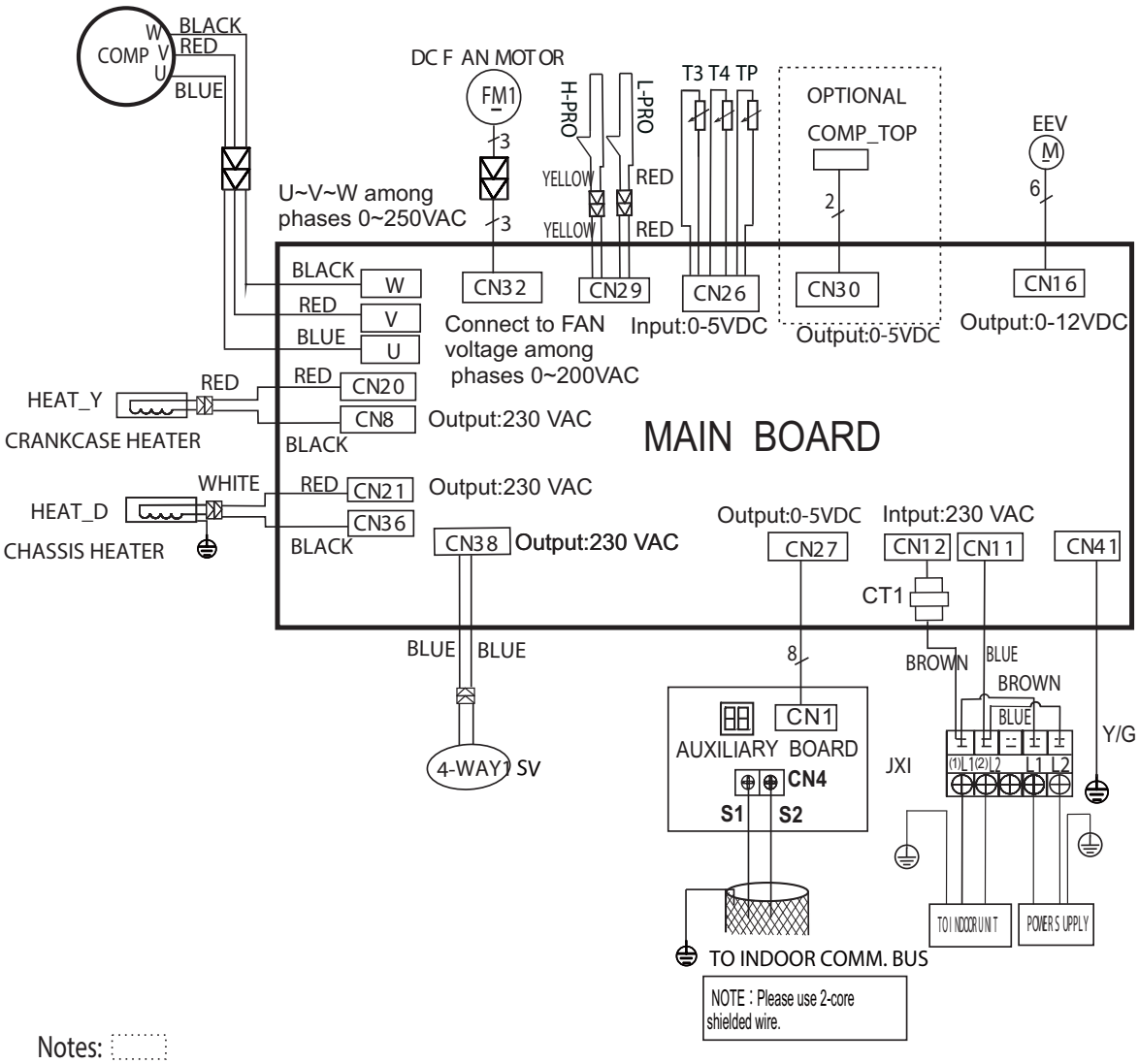

Notes:
COMPONENT IN DASH LINE IS OPTIONAL OR FIELD WIRING

Fig. 9 — Wiring Diagram Size 36K

Table 22 — Wiring Diagram 36K

CODE	PART NAME
JX1	Terminal Block
COMP_TOP	Compressor Overload Protection Temp. Sensor
EEV	Electric Expansive Valve
FM1	DC Fan Motor
COMP	Compressor
HEAT_Y	Crankcase Heater
CT1	AC Current Detector
H-PRO	High Pressure Switch
L-PRO	Low Pressure Switch
SV	Reserve Valve
TP	COMP. Discharge TEMP. Sensor
T3	COIL TEMP. Sensor
T4	Outdoor Ambient TEMP. Sensor
HEAT_D	Chassis Heater

WIRING DIAGRAMS (CONT)

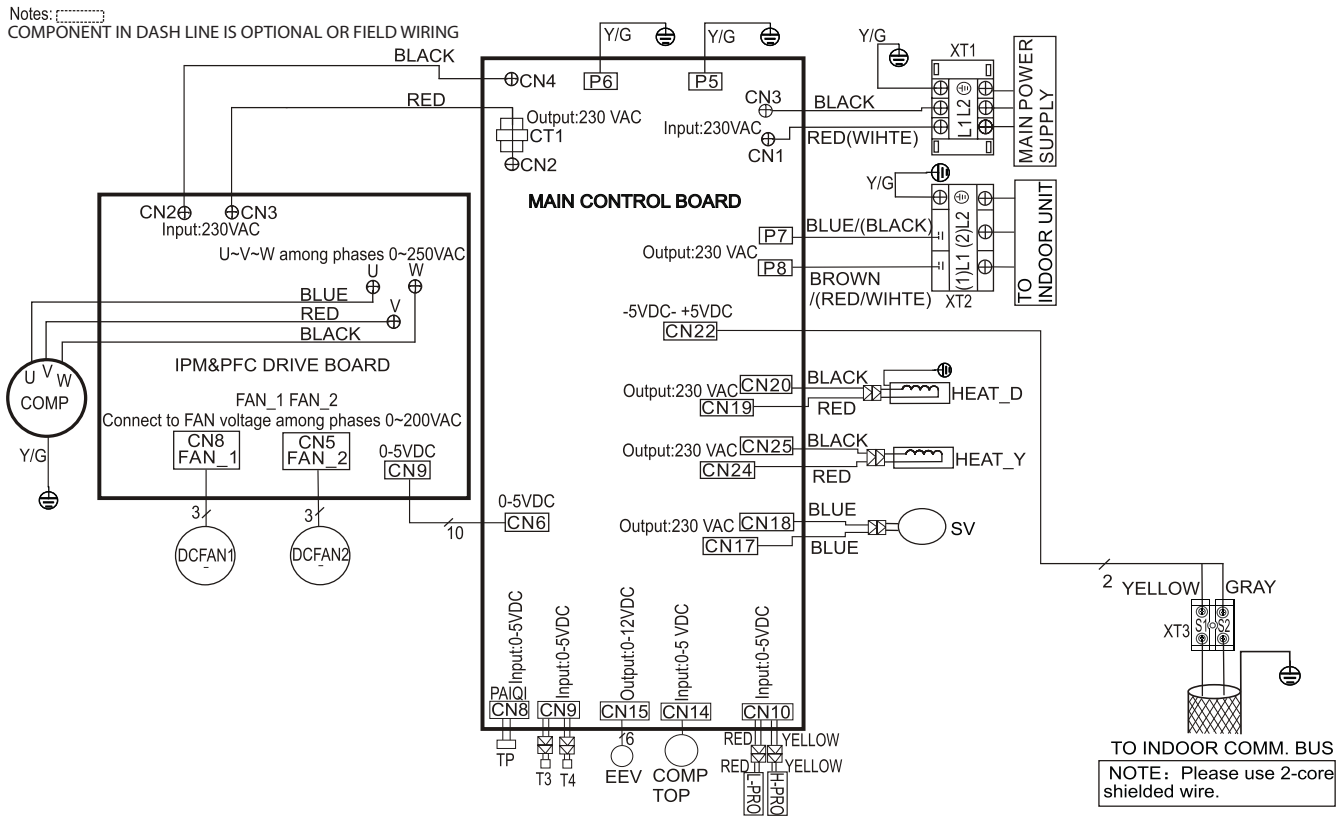

Fig. 10 — Wiring Diagram Sizes 48K - 58K

Table 23 — Wiring Diagram Sizes 48K - 58K

CODE	PART NAME
COMP	Compressor
CTI	AC Current Detector
EEV	Electronic Expansion Valve
DCFAN1	Outdoor DC Fan Motor
DCFAN2	
HEAT_D	Chassis Heater
HEAT_Y	Crankcase Heater
H-PRO	High Pressure Switch
L-PRO	Low Pressure Switch
SV	Reverse Valve
TP	Comp. Discharge Temp Sensor
T3	Coil Temp. Sensor
T4	Outdoor Ambient Temp Sensor
COMP TOP	Compressor Overload Protection Temp. Sensor

GUIDE SPECIFICATIONS

HORIZONTAL DISCHARGE OUTDOOR UNITS

Size Range: 3 to 5 Ton Nominal Cooling and Heating Capacity
Model Number: **38MBRC**

Part 1 - General

1.01 System Description

a. Outdoor air-cooled split system compressor sections suitable for on-the-ground, rooftop, wall hung or balcony mounting. Units consist of a rotary compressor, an air-cooled coil, propeller-type draw-through outdoor fan, reversing valve (HP), accumulator (HP units), metering device(s), and a control box. Units discharge air horizontally as shown on the contract drawings. Units function as the outdoor component of an air-to-air heat pump system.
b. Units are to be used in a refrigeration circuit matched to ductless heat pump fan coil units.

1.02 Agency Listings

a. Unit construction complies with ANSI/AHRI 210/240, latest revision, and with the NEC.
b. Units are evaluated in accordance with the UL standard 60335-2-40/ CSA C22.2 No. 60335-2-40.
c. Units are listed in CEC directory.
d. Unit cabinet is capable of withstanding the 500-hour salt spray test per Federal Test Standard no. 141 (method 6061).
e. Air-cooled condenser coils are leak tested at 550 psig.

1.03 Delivery, Storage, And Handling

Units are shipped in one piece and are stored and handled per the manufacturer's recommendations.

1.04 Warranty (For Inclusion By Specifying Engineer)

Part 2 - Products

2.01 Equipment

1. General:
   Factory assembled, single piece, air-cooled outdoor unit. Contained within the enclosure are the factory wiring, piping, controls, and the compressor.
2. **Unit Cabinet:**
   a. The unit cabinet is constructed of galvanized steel, bonderized and coated with baked-enamel finish on the inside and outside.
   b. The unit access panels are removable and provide full access to the compressor, fan, and the control components.
   c. The outdoor compartment is isolated and has an acoustic lining to assure a quiet operation.
3. **Fans:**
   a. The outdoor fans are direct-drive propeller type, and discharge air horizontally. The fan draws air through the outdoor coil.
   b. Outdoor fan motors are totally-enclosed, single phase motors with class E insulation and permanently lubricated ball bearings. The motor is protected by internal thermal overload protection.
   c. The shaft has an inherent corrosion resistance.
   d. Fan blades are non-metallic and statically and dynamically balanced.
   e. Outdoor fan openings are equipped with a PVC metal/mesh coated protection grille over the fan.
4. **Compressor:**
   a. The compressor is the fully hermetic variable speed rotary type.
   b. The compressor is equipped with an oil system, operating oil charge, and motor.
   c. The motor is NEMA rated class E, suitable for operation in a refrigerant atmosphere.
   d. The compressor assembly is installed on rubber vibration isolators.
5. **Outdoor Coil:**
   The coil is constructed of aluminum hydrophilic pre-coated fins mechanically bonded to seamless copper tubes, which are cleaned, dehydrated and sealed.
6. **Refrigerant Components:**
   Refrigerant circuit components include multiple brass external liquid line service valves with a service gauge connection port, multiple suction line service valves with a service gage connection port, accumulator, reversing valve, and electronic expansion valves.
7. **Safeties:**
   Operating safeties are factory selected, assembled, and tested. The minimum functions include the following:
   a. Compressor discharge over temperature protection.
   b. System low voltage protection.
   c. Compressor overload protection.
   d. Compressor over current protection.
   e. IPM module protection.
8. **Electrical Requirements:**
   a. Units operate on single-phase, 60 Hz power at 208/230v.
   b. The unit electrical power is a single point connection.
   c. All power and control wiring must be installed per NEC and all local electrical codes.
   d. Units have multiple terminal blocks to connect to multiple indoor units.

© 2022 Carrier. All rights reserved.

Manufacturer reserves the right to change, at any time, specifications and designs without notice and without obligations.