45VMH
VRF High Static Ducted Unit
45VMH048---3

Submittal Data

Job Name_____ Location_____
Tag _____

A261279

Fig. 1 – High Static Ducted Unit

VRF High Static Ducted Features

- The unit uses R-454B as a refrigerant.
- Seven sizes from 24,000 to 96,000 Btu/h.
- 208/230V DC motor.
- Internally Installed A2L Refrigerant Leak Sensor.
- Built-in connection for a 3rd-party 24V thermostat.
- Unit capable of constant fan speed or constant airflow.

UNIT MODEL	45VMH048---3	
PERFORMANCE		
Cooling Capacity	Btu/h	48,000
Heating Capacity	Btu/h	54,000
Airflow (Highest to Lowest)	CFM	1447/1373/1299/1226 /1152/1078/1005
System Sound Pressure (Highest to Lowest)	dBA	49/47/46/44/43/41/40
External Static Pressure (ESP)	in.WG	1.0
ELECTRICAL		
Power Supply	V/Ph/Hz	208-230/1/60
Minimum Circuit Amps (MCA)	A	4.54
Maximum Overcurrent Protection (MOP)	A	15
Filter		
Dimensions (W x L x D)	in.	37-5/8 x 10-23/64 x 11/16
MERV Rating		5

MOTOR		
Motor Type	DC	
Motor Output	W	560
PHYSICAL DATA		
Pipe Connection Size - Gas (Low Pressure)	in.	5/8
Pipe Connection Size - Liquid (High Pressure)	in.	3/8
Pipe Connection Size - Drain Pipe	in.	1
Refrigerant		R-454B
Unit Width	in.	55-1/8
Unit Height	in.	11-3/4
Unit Depth	in.	32-3/4
Unit Net Weight	lbs.	139.8

Accessories

- Wireless Remote Controller — 45VM900001
- Programmable Wired Remote Controller — 45VM900002
- Touchscreen Programmable Wired Remote Controller — 45VM900003
- Touchscreen Central Controller — 45VM900006A
- Multi-Protocol Gateway — 45VM900052A

HIGH STATIC DUCTED UNIT 45VMH048---3
DIMENSIONAL DRAWING

24-54kBtu/h models dimensions (unit: in.(mm))

Capacity	A	B	C	D	E	F	G	H	I
24~30kBtu/h	41-11/32 (1050)	33-15/32 (850)	37 (940)	8-21/32 (220)	5-3/4 (146)	37-5/8 (956)	43-1/8 (1095)	7/8-14 UNF	5/8-18 UNF
36~54kBtu/h	55-1/8 (1400)	47-1/4 (1200)	50-25/32 (1290)	8-21/32 (220)	8-3/8 (213)	51-7/16 (1306)	56-7/8 (1445)	7/8-14 UNF	5/8-18 UNF

External dimension, air outlet size, and size of fresh air outlet:

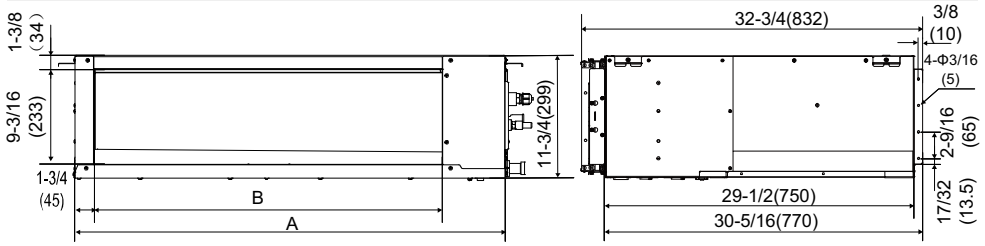

Size of return air inlet:

Dimension of pipe and water pipe:

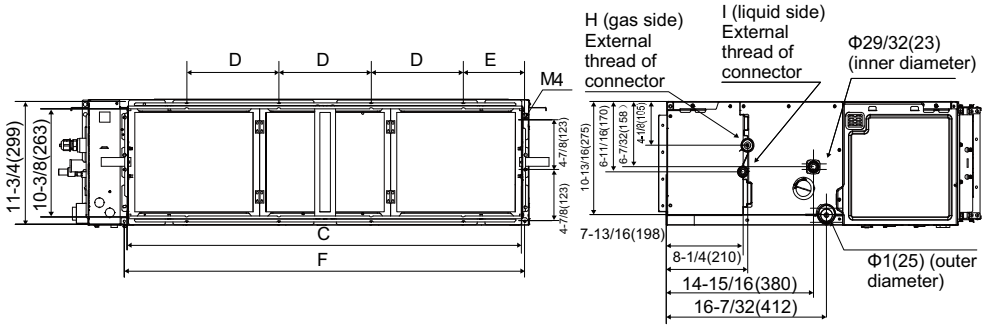

Size of return air inlet, and the distance between the lugs:

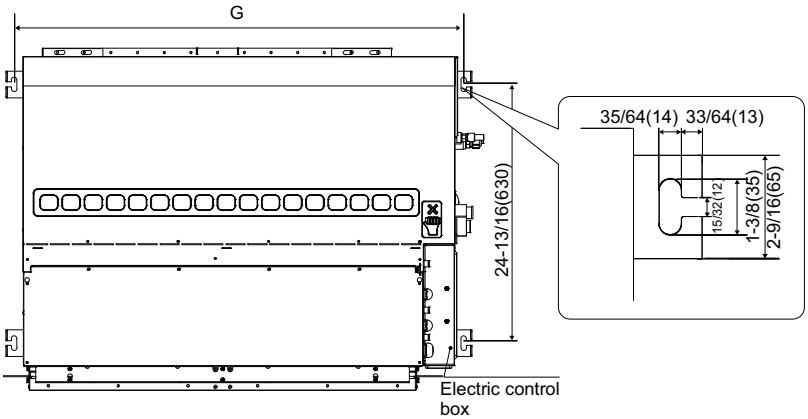

A261278

Fig. 2 – Dimensional Drawing — 24-54 kBtu/h

©2026 Carrier. All rights reserved.
A Carrier Company

Edition Date: 09/26

Catalog No: 45VMH048---3-B-1SD
Replaces: New

Manufacturer reserves the right to change, at any time, specifications and designs without notice and without obligations.