48XT/48XTN
Infinity™ 15 Packaged Hybrid Heat™ System
with Puron® (R−410A) Refrigerant
2 to 5 Nominal Tons (024−060)

Carrier®
Turn to the Experts.℠

Product Data

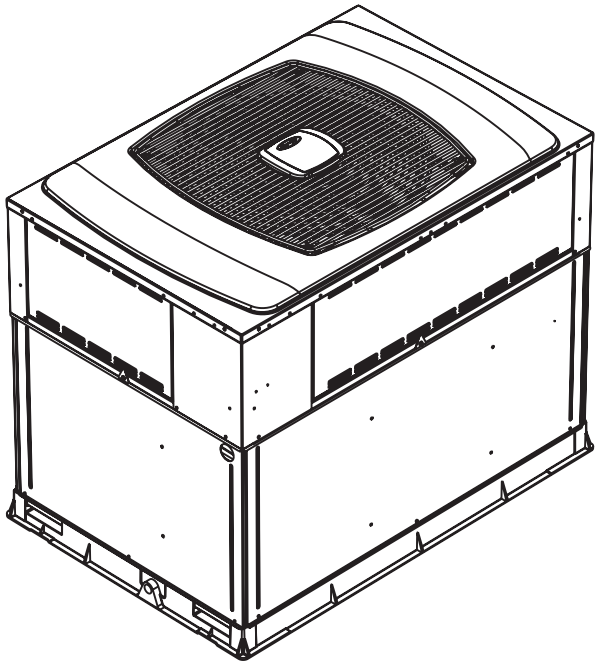

A05307

Unit 48XT

Single-Packaged Products with energy-saving features and Puron® refrigerant.

- Up to15 SEER
- Up to 8.0 HSPF
- Up to 12 EER at 95°F (35°C) OD
- Up to 80.1% AFUE
- Low Sound Levels
- Variable-Speed Blower (Standard)
- Factory-Installed TXV
- Two-stage cooling and heat pump operation and gas heating
- Stainless steel heat exchanger (Limited Lifetime Warranty)

FEATURES/BENEFITS

One-piece heating and cooling unit with low installation cost, dependable performance and easy maintenance.

Efficient operation

High-efficiency design with SEERs (Seasonal Energy Efficiency Ratio) of up to 15.0, HSPF up to 8.0 and AFUE up to 80.1%.

Puron® environmentally-sound refrigerant is Carrier's unique refrigerant designed to help protect the environment. Puron is an HFC refrigerant which does not contain chlorine that can harm the ozone layer. The most important advantage of Puron refrigerant is that it has not been banned in future air conditioning systems as the traditional refrigerant R-22 has been. Puron refrigerant is in service in over 100,000 systems proving highly reliable, environmentally sound performance.

Energy-saving, direct spark ignition saves gas by operating only when the room thermostat calls for heating. Standard units are furnished with natural gas controls. A low-cost field installed kit for propane conversion is available for all units.

48XTN units are dedicated Low NOx units designed for California installations. These models meet the California maximum oxides of nitrogen (NOx) emissions requirement of 40 nanograms/joule or less as shipped from the factory and MUST be installed in California Air Quality Management Districts or any other location where a Low NOx rule exists.

Variable-speed blower motors provide better comfort and energy efficiency. You can expect up to 30 times better dehumidification; economical constant airflow which provides improved indoor air quality and more even temperatures from room to room; and reduced indoor noise due to lower air velocity. In addition, you'll realize improved installation flexibility with 3 different airflow choices for best overall comfort.

Easy installation

Factory-assembled package is a compact, fully self-contained combination gas heating heat pump unit that is pre-wired, pre-piped, and pre-charged for minimum installation expense. 48XT units are available in a variety of standard capacity ranges. Units install easily on a rooftop or at ground level.

Durable, dependable components

Compressors have two stages of cooling and heating and are designed for high efficiency. Each compressor is hermetically sealed against contamination to help promote longer life and dependable operation. Vibration isolation provides quiet operation. Compressors have internal high-pressure and overcurrent protection.

Convertible duct configuration

Unit is designed for easy use in either downflow or horizontal applications. Each unit is easily converted from horizontal to downflow and includes horizontal duct covers.

Direct-drive, variable-speed blower motor is standard on all 48XT models.

Direct-drive, PSC condenser fan motors are designed to help reduce energy consumption and provide for cooling operation down to 55°F (12.7°C) outdoor temperature. Low-ambient cooling is available below 55°F (12.7°C) when low-ambient cooling is enabled in the User Interface (UI). Motormaster® II low-ambient kit is not required.

Infinity™ User Interface is designed to work as a system with Carrier's single-packaged product.

Refrigerant system is designed to provide dependability. Liquid refrigerant filter driers are used to promote clean, unrestricted operation. Each unit leaves the factory with a full Puron refrigerant charge. Refrigerant service connections make checking operating pressures easier.

Indoor and outdoor coils are computer designed for optimum heat transfer and cooling efficiency. The indoor coil is fabricated from copper tube and aluminum fins and is located inside the unit for protection against damage. The outdoor coil is internally mounted on the top tier of the unit. Copper fin coils and pre-coated fin coils are available from the factory by special order. These coils are recommended in applications where aluminum fins are likely to be damaged due to corrosion. They are ideal for seacoast applications.

Thermostatic expansion valve (TXV) —A hard-shutoff, balance port TXV maintains a constant superheat at the evaporator exit (cooling cycle) resulting in higher overall system efficiency.

High- and low-pressure switches give added safety and reliability to the compressor.

Low sound ratings ensure a quiet indoor and outdoor environment with sound ratings as low as 75 dB. (See page 4.)

Monoport inshot burners produce precise air-to-gas mixture, which provides for clean and efficient combustion. The large monoport on the inshot (or injection type) burners seldom, if ever, requires cleaning. All gas furnace components are accessible in one compartment.

Turbo-tubular™ heat exchangers are constructed of 409 stainless steel for corrosion resistance and optimum heat transfer for improved efficiency. The tubular design permits hot gases to make multiple passes across the path of the supply air.

Easy to service cabinets provide easy single-panel accessibility to serviceable components during maintenance and installation. The basepan, with integrated drain pan, provides easy ground level installation with or without a mounting pad. Convenient handholds are provided to manipulate the unit on the job site. A nesting feature ensures a positive basepan to roof curb seal when the unit is roof mounted. A convenient 3/4-in. wide perimeter flange makes frame mounting on a rooftop easy.

Louvered grille provides hail and vandalism protection for the coil.

Downflow operation is easily provided in the field to allow vertical ductwork connections. The basepan utilizes knockout style seals on the bottom openings to ensure a positive seal in the horizontal airflow mode.

Infinity Furnace Control board provides safe and efficient control of heating and simplifies troubleshooting through its built-in diagnostic function.

Heating

- Reliable direct spark ignition system
- Two-speed PSC inducer motor with ball bearings
- Low stage heating delivers 65% of high-stage capacity

Cabinets are constructed of heavy-duty, phosphated, zinc-coated, pre-painted steel capable of withstanding 500 hrs of salt spray. Interior surfaces of the evaporator and electric heater compartments are insulated with cleanable, semi-rigid insulation board, which keeps the conditioned air from being affected by the outdoor ambient temperature and provides improved indoor air quality. (Conforms to American Society of Heating, Refrigeration and Air Conditioning Engineers No. 62P.) The sloped drain pan minimizes standing water in the unit, which is provided with an external drain.

Standard metal duct covers with insulation come with the unit and cover the horizontal duct openings. These can be left in place if the units are converted to downflow.

Short-cycling protection for the compressor is incorporated into our Infinity heat pump/air conditioner dual capacity control board ensuring a five-minute delay before restarting compressor after shutdown for any reason.

Limited Warranty—Standard 5-year limited warranty on all parts and 10-year limited warranty on compressor. The 48XT heat exchangers come with a Limited Warranty for lifetime of original owner in single family residence; 15 years in other residential and commercial applications. Five-year limited warranty on entire unit. Contact your dealer for details.

TABLE OF CONTENTS

FEATURES/BENEFITS 1-2
MODEL NUMBER NOMENCLATURE 3
ARI CAPACITIES 4
PHYSICAL DATA 5-6
OPTIONS AND ACCESSORIES 7
BASE UNIT DIMENSIONS 8-9
ACCESSORY DIMENSIONS 10
SELECTION PROCEDURE 11
PERFORMANCE DATA 12-30
TYPICAL PIPING AND WIRING 31
APPLICATION DATA 32
ELECTRICAL DATA 33
TYPICAL WIRING SCHEMATICS 34
CONTROLS 35
GUIDE SPECIFICATIONS 36-37

MODEL NUMBER NOMENCLATURE

48XT - 024 - - - 3 0 1 -

Type of Unit
48XT - Packaged
Hybrid Heat System

N = Low NOx

Nominal Cooling Capacity
024 - 2 Ton
030 - 2.5 Ton
036 - 3 Ton
042 - 3.5 Ton
048 - 4 Ton
060 - 5 Ton

N/A

LEGEND
AL - Aluminum
CU - Copper

Electrical Supply
3 - 280/230-1-60

Series

Packaging

Options

BT - AL evap, vinyl condens
CC - AL evap, CU condens
CU - CU evap & condens
TP - Base unit with tin plated indoor coil hairpins
TV - TP with vinyl coating on outdoor coil
TC - TP with AL indoor coil and CU/CU outdoor coil

Only used if ordering an option

ARI* CAPACITIES

Cooling Capacities and Efficiencies

UNIT 48XT	NOMINAL TONS	STANDARD CFM (High/Low Stage) (Cooling & Heating)	NET COOLING CAPACITIES (Btuh) (High/Low Stage)	EER @A†	SEER‡	SOUND RATINGS** (dBA)
024	2	800 / 600	22,600 / 17,600	11.2	15.0	75
030	2-1/2	1000 / 700	28,600 / 21,400	11.6	15.0	75
036	3	1200 / 850	34,600 / 24,400	12	15.0	75
042	3-1/2	1500 / 975	40,500 / 29,000	11.6	15.0	75
048	4	1600 / 1100	46,000 / 33,400	11	14.5	78
060	5	1750 / 1200	57,000 / 40,500	11	14.0	78

Heat Pump Heating Capacities and Efficiencies

UNIT 48XT	HIGH HEAT CAPACITY (BTUH) @ 47°F (8.3°C) (High/Low Stage)	HIGH HEAT COP @ 47°F (8.3°C) (High/Low Stage)	LOW HEAT CAPACITY (BTUH) @ 17°F (-8.3°C) (High/Low Stage)	LOW HEAT COP @ 17°F (-8.3°C) (High/Low Stage)	HSPF‡
024	20,800 / 16,800	3.3 / 3.2	11,600 / 8,400	2.2 / 1.8	8.0
030	27,600 / 20,400	3.5 / 3.5	14,000 / 9,600	2.1 / 1.9	8.0
036	33,600 / 23,000	3.4 / 3.4	17,200 / 11,200	2.4 / 1.7	8.0
042	39,500 / 27,600	3.6 / 3.5	20,600 / 14,200	2.3 / 2.0	8.0
048	45,500 / 32,200	3.3 / 3.5	25,000 / 15,200	2.4 / 1.9	8.0
060	56,000 / 39,500	3.2 / 3.3	30,800 / 20,400	2.2 / 1.9	8.0

Gas Heating Capacities and Efficiencies

Unit 48XT	Heating Input (Btuh) High/Low	Output Capacity (Btuh) High / Low	Temperature Rise Range High °F	Temperature Rise Range Low °F	AFUE
024040 030040	40,000 / 26,000	32,000 / 20,800	20-50 (-6.6-10°C)	15-45 (-9.4-7.2°C)	78
024060 030060 036060 042060	60,000 / 39,000	49,000 / 31,200	25-55 (-3.8-12.7°C)	25-55 (-3.8-12.7°C)	78.6
036090 042090 048090 060090	90,000 / 58,500	74,000 / 46,800	35-65 (1.6-18.3°C)	35-65 (1.6-18.3°C)	79.2
048115 060115	115,000 / 75,000	95,000 / 60,000	30-60 (-1.1-15.5°C)	30-60 (-1.1-15.5°C)	80.1
048130 060130	130,000 / 84,500	104,000 / 67,600	35-65 (1.6-18.3°C)	35-65 (1.6-18.3°C)	80.0

* Air Conditioning & Refrigeration Institute.
† "A" conditions–80°F (26.6°C) indoor db/67°F (19.4°C) indoor wb & 95°F (35°C) outdoor db.
‡ Rated in accordance with U.S. Government DOE (Department of Energy) test procedures and/or ARI Standards 210/240–94.
** Tested in accordance with ARI Standard 270–95 (not listed in ARI).

NOTES:
1. Ratings are net values, reflecting the effects of circulating fan heat. Ratings are based on:
Cooling Standard: 80°F (26.6°C) db, 67°F (19.4°C) wb indoor entering –air temperature and 95°F (35°C) db outdoor entering–air temperature.
2. Before purchasing this appliance, read important energy cost and efficiency information available from your retailer.

LEGEND
dBA—Sound Levels (decibels)
db—Dry Bulb
SEER—Seasonal Energy Efficiency Ratio
wb—Wet Bulb
COP—Coefficient of Performance
HSPF—Heating Season Performance Factor

PHYSICAL DATA

UNIT SIZE	024040	030040	030060	036060	036090	042060	042090
NOMINAL CAPACITY (ton)	2	2–1/2	2–1/2	3	3	3–1/2	3–1/2
OPERATING WEIGHT (lb.)	438	468	473	503	511	514	522
COMPRESSORS	Two–Stage Scroll						
Quantity	1						
REFRIGERANT: PURON (R–410A) Quantity (lb.)	10.3	11.5	11.5	9.7	9.7	14.0	14.0
EXPANSION DEVICE–HEATING	AccuRater						
Orifice OD (in.) – Left	0.042	0.038	0.038	0.035	0.035	0.040	0.040
Orifice OD (in.) – Right		0.038	0.038	0.035	0.035	0.042	0.042
EXPANSION DEVICE–COOLING	TXV						
Size	2 Ton	3 Ton	3 Ton	3 Ton	3 Ton	4 Ton	4 Ton
Part Number	EA36YD129	EA36YD139	EA36YD139	EA36YD139	EA36YD139	EA36YD149	EA36YD149
OUTDOOR COIL							
Rows...Fins/in.	2...21	2...21	2...21	2...21	2...21	2...21	2...21
Face Area (sq ft)	13.6	15.3	15.3	17.5	17.5	19.4	19.4
OUTDOOR FAN							
Nominal Cfm	2700	2700	2700	2800	2800	2800	2800
Diameter (in.)	22	22	22	22	22	22	22
Motor Hp (Rpm)	1/8 (825)	1/8 (825)	1/8 (825)	1/8 (825)	1/8 (825)	1/8 (825)	1/8 (825)
INDOOR COIL							
Rows...Fins/in.	3...17	3...17	3...17	3...17	3...17	3...17	3...17
Face Area (sq ft)	3.7	3.7	3.7	4.7	4.7	4.7	4.7
INDOOR FAN							
Nominal Airflow (Cfm)							
Comfort	Variable based on Comfort Roll back (see User Interface instructions for more information).						
Efficiency	700	875	875	1050	1050	1225	1225
Max	800	1000	1000	1200	1200	1400	1400
Furnace (gas ht.) airflow–Low Stage	475	475	727	745	875	745	875
Furnace (gas ht.) airflow–High Stage	844	844	1120	1120	1410	1120	1410
Size (in.)	10x10	10x10	10x10	11x10	11x10	11x10	11x10
Motor HP (RPM)	1/2	1/2	1/2	3/4	3/4	3/4	3/4
FURNACE SECTION* **Burner Orifice No. (Qty...Drill Size)** Natural Gas	2...44	2...44	3...44	3...44	3...38	3...44	3...38
HIGH–PRESSURE SWITCH (psig)							
Cut–out	670 ±10						
Reset (Auto)	470 ± 25						
HIGH–PRESSURE SWITCH 2 (psig) (Compressor Solenoid)							
Cut–out	565 ± 15						
Reset (Auto)	455 ± 15						
LOSS–OF–CHARGE / LOW–PRESSURE SWITCH (Liquid Line) (psig)							
Cut–out	25 ± 5						
Reset (auto)	55 ± 5						
RETURN–AIR FILTERS (in.)† Throwaway	20x24x1	20x24x1	20x24x1	24x30x1	24x30x1	24x36x1	24x36x1

Continued next page.

48XT

PHYSICAL DATA (CONT)

UNIT SIZE	048090	048115	048130	060090	060115	060130
NOMINAL CAPACITY (ton)	4	4	4	5	5	5
OPERATING WEIGHT (lb.)	538	538	538	581	581	581
COMPRESSORS	Two-Stage Scroll					
Quantity	1					
REFRIGERANT: PURON (R-410A) Quantity (lb.)	15.5	15.5	15.5	16.0	16.0	16.0
EXPANSION DEVICE-HEATING	AccuRater					
Orifice OD (in.) - Left	0.038	0.038	0.038	0.046	0.046	0.046
Orifice OD (in.) - Right	0.046	0.046	0.046	0.046	0.046	0.046
EXPANSION DEVICE-COOLING	TXV					
Size	4 Ton	4 Ton	4 Ton	5 Ton	5 Ton	5 Ton
Part Number	EA36YD149	EA36YD149	EA36YD149	EA36YD159	EA36YD159	EA36YD159
OUTDOOR FAN						
Nominal Cfm	3300	3300	3300	3300	3300	3300
Diameter (in.)	22	22	22	22	22	22
Motor Hp (Rpm)	1/4 (1100)	1/4 (1100)	1/4 (1100)	1/3 (1110)	1/3 (1110)	1/3 (1110)
OUTDOOR COIL						
Rows...Fins/in.	2...21	2...21	2...21	2...21	2...21	2...21
Face Area (sq ft)	19.4	19.4	19.4	23.3	23.3	23.3
INDOOR COIL						
Rows...Fins/in.	3...17	3...17	3...17	4...17	4...17	4...17
Face Area (sq ft)	5.7	5.7	5.7	5.7	5.7	5.7
INDOOR FAN						
Nominal Airflow (Cfm)						
Comfort	Variable based on Comfort Roll back (see User Interface instructions for more information).					
Efficiency	1400	1400	1400	1750	1750	1750
Max	1600	1600	1600	2000	2000	2000
Furnace (gas ht.) airflow–Low Stage	815	1215	1255	845	1215	1255
Furnace (gas ht.) airflow–High Stage	1385	1885	1875	1300	1910	1920
Size (In.)	11x10	11x10	11x10	11x10	11x10	11x10
Motor HP (RPM)	3/4	3/4	3/4	1	1	1
FURNACE SECTION* **Burner Orifice No. (Qty...Drill Size)**						
Natural Gas	3...38	3...33	3...31	3...38	3...33	3...31
HIGH-PRESSURE SWITCH (psig)						
Cut-out	670 ± 10					
Reset (Auto)	470 ± 25					
HIGH-PRESSURE SWITCH 2 (psig) (Compressor Solenoid)						
Cut-out	565 ± 15					
Reset (Auto)	455 ± 15					
LOSS-OF-CHARGE / LOW-PRESSURE SWITCH (Liquid Line) (psig)						
Cut-out	25 ± 5					
Reset (auto)	55 ± 5					
RETURN-AIR FILTERS (in.)† Throwaway	24x36x1	24x36x1	24x36x1	24x36x1	24x36x1	24x36x1

*Based on altitude of 0 to 2000 ft.

†Recommended filter sizes for field-installed air filter grilles mounted on the wall or ceiling of the conditioned structure. Required filter sizes shown are based on the larger of the ARI (Air Conditioning and Refrigeration Institute) rated cooling airflow or the heating airflow velocity of 300 ft/minute for throwaway type or 450 ft/minute for high-capacity type. Air filter pressure drop for non-standard filters must not exceed 0.08 in. wg.

Outdoor Sound: Octave Band Data—Decibels (dBA)

MODEL NO.	48XT					
Frequency (Hz)	**024**	**030**	**036**	**042**	**048**	**060**
125	58.8	58.8	60.7	56.7	62.4	63.5
250	63.5	63.5	63.3	62.8	69.9	67.6
500	67.2	67.2	66.8	67.8	71.3	71.8
1000	66.9	66.9	66.5	67.4	73.4	75.5
2000	63.7	63.7	64.2	63.7	70.0	71.0
4000	58.3	58.3	60.3	57.7	66.3	68.1
8000	50.0	50.0	53.0	50.8	60.1	59.9

OPTIONS AND ACCESSORIES

Factory-installed options

Coil options include tin-plated* indoor hairpins, copper/copper and vinyl-coated construction for refrigerant coils. Units are shipped standard with copper tube/aluminum fin construction. See model number nomenclature for coil options.

*Tin-plated indoor coils are built with special hairpins that are designed to resist both general pitting corrosion and excessive indoor corrosion (Formicary Corrosion).

Field-installed accessories

Manual Air Damper (25% open)
Solid-State Time Guard® II Device
Filter Rack
Flat Roof Curbs (8-in. and 14-in.)
Square-to-Round Duct Transition Kit
Infinity™ User Interface
Crankcase Heater
Low-Ambient Kit (Motormaster II Control)
LP to Natural Conversion Kit
High Altitude Kit
LP Conversion Kit
Lifting Kit
Compressor Hard Start Kit (for use on single-phase units only)

Manual outside air damper includes hood and filter rack with adjustable damper blade for up to 25% outdoor air.

Flat roof curbs in both 8 in. and 14 in. sizes are available for roof mounted applications.

Square-to-round duct transition kit enables 024-048 size units to be fitted to 14 in. round ductwork.

Compressor hard start kit assists compressor start-up by providing additional starting torque on single-phase units and prolongs compressor motor life.

Infinity User Interface coupled with the system's variable-speed indoor blower delivers Carrier's patented IdealHumidity technology that allows for even greater humidity control. Along with more precisely controlling temperature and humidity, the Infinity User Interface offers full seven-day programmability allowing you to further customize your comfort and energy savings.

Lifting kit includes 4 metal brackets that are available to assist in lifting this product onto a roof application.

LP (liquid propane) conversion kit allows for conversion from natural gas to liquid propane fuel.

High altitude kit is for use at 2001 to 6000 ft above sea level. Kit consists of natural gas orifices that compensate for gas heat operation at high altitude.

LP to natural gas conversion kit allows conversion back to natural gas.

Crankcase heater provides anti-floodback protection for low-load cooling applications.

Low-ambient kit (Motormaster® II control) allows the use of mechanical cooling down to outdoor temperatures as low as 0°F.

Filter rack features easy installation, serviceability, and high-filtering performance for vertical or horizontal applications.

FILTER RACK

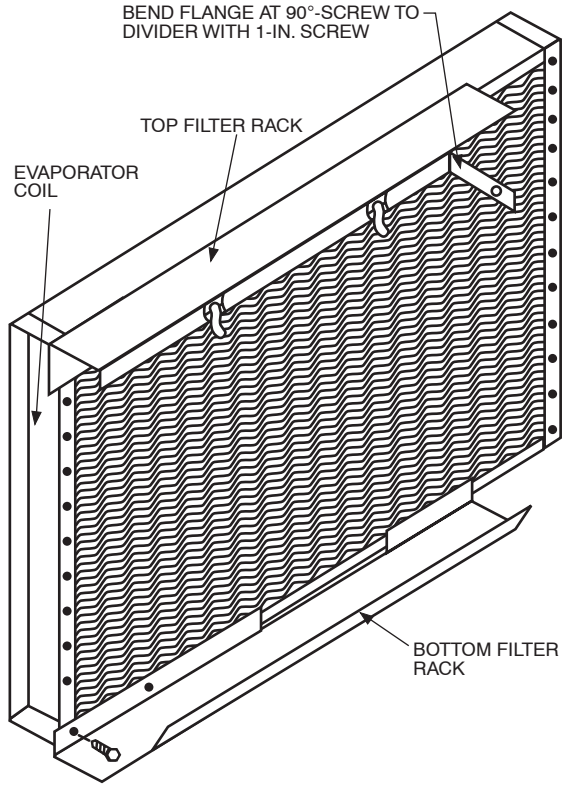

MANUAL OUTSIDE AIR DAMPER

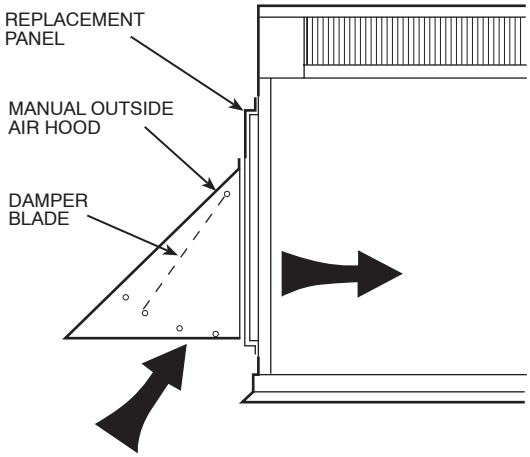

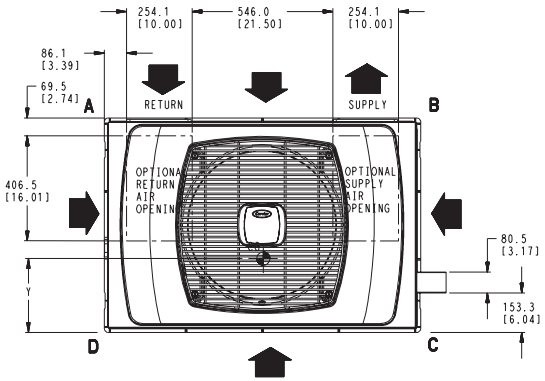

TOP VIEW

UNIT	ELECTRICAL CHARACTERISTICS	UNIT WT.		UNIT HEIGHT	CENTER OF GRAVITY MM/IN		
		LBS.	KG.	"A"	X	Y	Z
48XT024040	208/230-1-60	438	198.7	1041.9(41.02)	508.0(20.0)	489.0(19.3)	447.0(17.6)
48XT030040	208/230-1-60	468	212.3	1092.7(43.02)	508.0(20.0)	489.0(19.3)	447.0(17.6)
48XT030060	208/230-1-60	473	214.6	1092.7(43.02)	508.0(20.0)	489.0(19.3)	447.0(17.6)

CORNER WEIGHT LBS./KG.				
	A	B	C	D
024040	94/42.6	94/42.6	87/39.5	162/73.5
030040	101/45.8	101/45.8	93/42.2	173/78.5
030060	102/46.3	102/46.3	94/42.6	175/79.4

REQUIRED CLEARANCES TO COMBUSTIBLE MATL.

MILLIMETERS [IN]
TOP OF UNIT.....355.6 [14.00]
DUCT SIDE OF UNIT.....50.8 [2.00]
SIDE OPPOSITE DUCTS.....355.6 [14.00]
BOTTOM OF UNIT.....12.7 [0.50]
ELECTRIC HEAT PANEL.....914.4 [36.00]

NEC. REQUIRED CLEARANCES.

MILLIMETERS [IN]
BETWEEN UNITS, POWER ENTRY SIDE.....1066.8 [42.00]
UNIT AND UNGROUNDED SURFACES, POWER ENTRY SIDE.....914.0 [36.00]
UNIT AND BLOCK OR CONCRETE WALLS AND OTHER
GROUNDED SURFACES, POWER ENTRY SIDE.....1066.8 [42.00]

REQUIRED CLEARANCE FOR OPERATION AND SERVICING

MILLIMETERS [IN]
EVAP. COIL ACCESS SIDE.....914.0 [36.00]
POWER ENTRY SIDE.....914.0 [36.00]
(EXCEPT FOR NEC REQUIREMENTS)
UNIT TOP.....914.0 [36.00]
SIDE OPPOSITE DUCTS.....914.0 [36.00]
DUCT PANEL.....304.8 [12.00]*

*MINIMUM DISTANCES:IF UNIT IS PLACED LESS THAN 304.8 [12.00] FROM WALL SYSTEM,THEN SYSTEM PERFORMANCE MAYBE COMPROMISED.

DIMENSIONS IN [] ARE IN INCHES

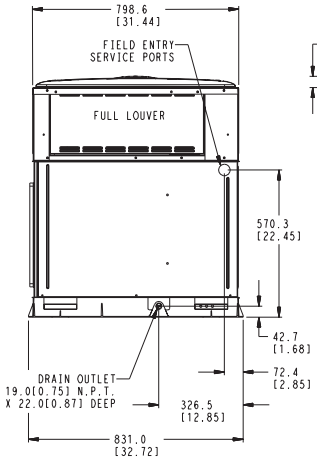

LEFT SIDE VIEW

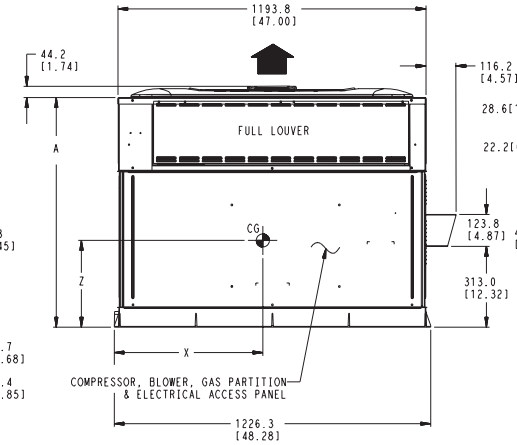

FRONT VIEW

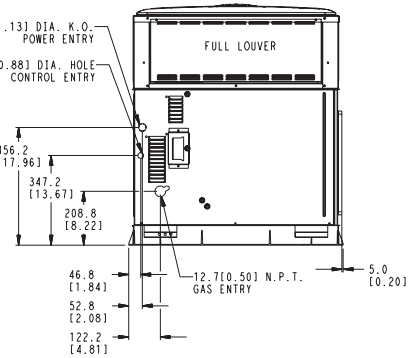

RIGHT SIDE VIEW

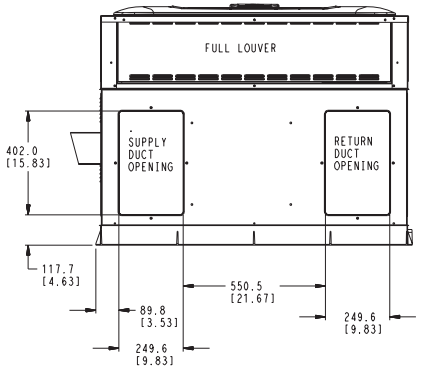

REAR VIEW

A06609

48XT024-030 Unit Dimensions

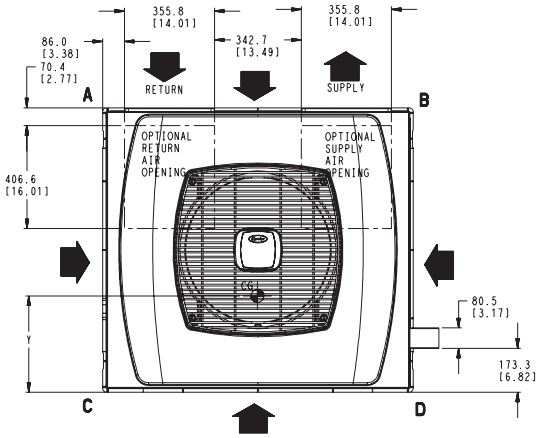

TOP VIEW

UNIT	ELECTRICAL CHARACTERISTICS	UNIT WT.		UNIT HEIGHT	CENTER OF GRAVITY MM/IN		
		LBS.	KG.	"A"	X	Y	Z
48XT036060	208/230-1-60	503	228.2	1142.5(44.98)	553.4(21.0)	520.7(20.5)	421.6(16.6)
48XT036090	208/230-1-60	511	231.8	1142.5(44.98)	553.4(21.0)	520.7(20.5)	421.6(16.6)
48XT042060	208/230-1-60	514	233.2	1193.3(46.98)	553.4(21.0)	520.7(20.5)	421.6(16.6)
48XT042090	208/230-1-60	522	236.8	1193.3(46.98)	553.4(21.0)	520.7(20.5)	421.6(16.6)
48XT048090	208/230-1-60	538	244.0	1193.3(46.98)	495.3(19.5)	539.8(21.3)	457.2(18.0)
48XT048115	208/230-1-60	538	244.0	1193.3(46.98)	495.3(19.5)	539.8(21.3)	457.2(18.0)
48XT048130	208/230-1-60	538	244.0	1193.3(46.98)	495.3(19.5)	539.8(21.3)	457.2(18.0)
48XT060090	208/230-1-60	581	263.6	1294.9(50.98)	553.4(21.0)	508.0(20.0)	447.0(17.6)
48XT060115	208/230-1-60	581	263.6	1294.9(50.98)	553.4(21.0)	508.0(20.0)	447.0(17.6)
48XT060130	208/230-1-60	581	263.6	1294.9(50.98)	553.4(21.0)	508.0(20.0)	447.0(17.6)

	CORNER WEIGHT LBS./KG.			
	A	B	C	D
036060	103/46.7	117/53.1	94/42.6	189/85.7
036090	105/47.7	118/53.5	96/43.5	191/86.6
042060	113/51.3	81/36.7	137/62.1	183/83.0
042090	114/51.7	82/37.2	140/63.5	186/84.4
048090	119/54.0	89/40.4	142/64.4	187/84.8
048115	119/54.0	89/40.4	142/64.4	187/84.8
048130	119/54.0	89/40.4	142/64.4	187/84.8
060090	127/57.6	93/42.2	156/70.8	205/93.0
060115	127/57.6	93/42.2	156/70.8	205/93.0
060130	127/57.6	93/42.2	156/70.8	205/93.0

REQUIRED CLEARANCES TO COMBUSTIBLE MATL.

	MILLIMETERS [IN]
TOP OF UNIT	355.6 [14.00]
DUCT SIDE OF UNIT	50.8 [2.00]
SIDE OPPOSITE DUCTS	355.6 [14.00]
BOTTOM OF UNIT	12.7 [0.50]
ELECTRIC HEAT PANEL	914.4 [36.00]

NEC. REQUIRED CLEARANCES.

	MILLIMETERS [IN]
BETWEEN UNITS, POWER ENTRY SIDE	1066.8 [42.00]
UNIT AND UNGROUNDED SURFACES, POWER ENTRY SIDE	914.0 [36.00]
UNIT AND BLOCK OR CONCRETE WALLS AND OTHER GROUNDED SURFACES, POWER ENTRY SIDE	1066.8 [42.00]

REQUIRED CLEARANCE FOR OPERATION AND SERVICING

	MILLIMETERS [IN]
EVAP. COIL ACCESS SIDE	914.0 [36.00]
POWER ENTRY SIDE	914.0 [36.00]
(EXCEPT FOR NEC REQUIREMENTS)	
UNIT TOP	914.0 [36.00]
SIDE OPPOSITE DUCTS	914.0 [36.00]
DUCT PANEL	304.8 [12.00]*

*MINIMUM DISTANCES: IF UNIT IS PLACED LESS THAN 304.8 [12.00] FROM WALL SYSTEM, THEN SYSTEM PERFORMANCE MAYBE COMPROMISED.

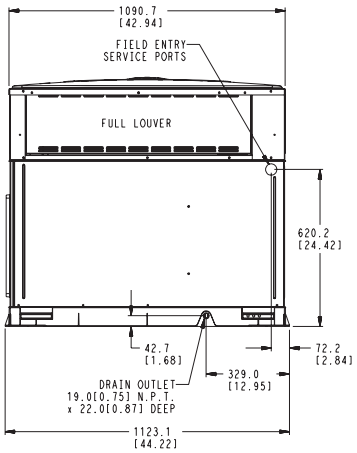

LEFT SIDE VIEW

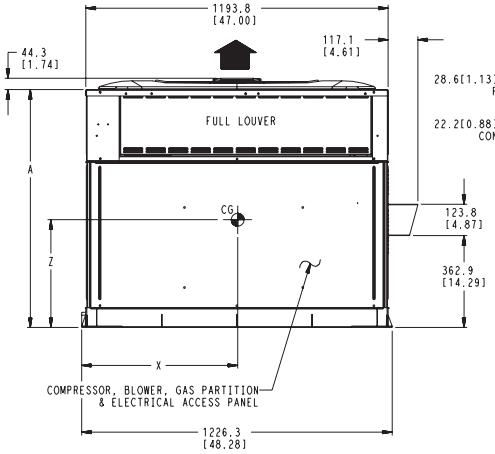

FRONT VIEW

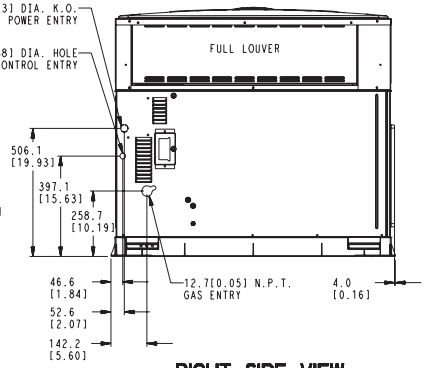

RIGHT SIDE VIEW

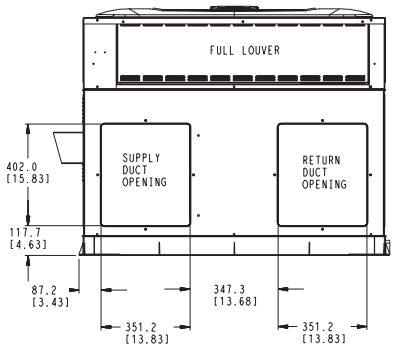

REAR VIEW

A06598

48XT036-060 Unit Dimensions

ACCESSORY DIMENSIONS

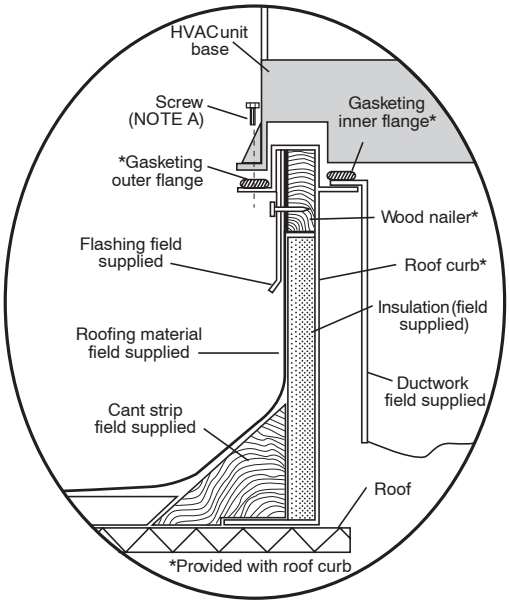

Roof Curb for Small Cabinet

Note A: When unit mounting screw is used, retainer bracket must also be used.

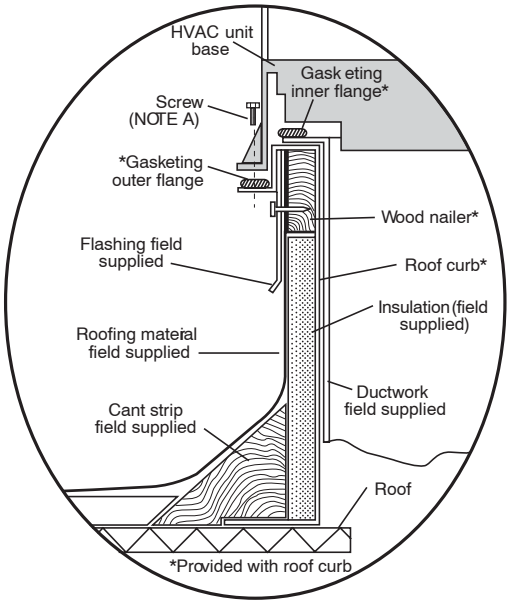

Roof Curb for Large Cabinet

Note A: When unit mounting screw is used, retainer bracket must also be used.

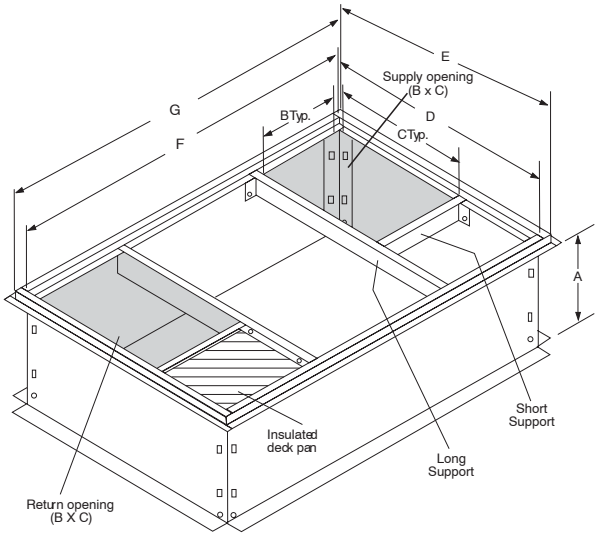

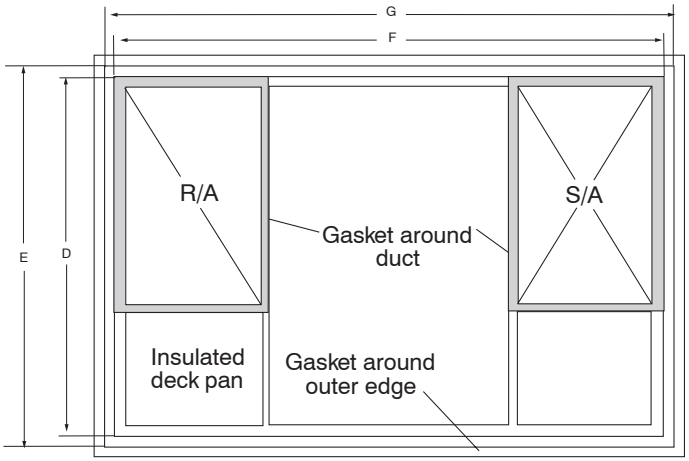

A05308

UNIT SIZE	ODS CATALOG NUMBER	A IN. (MM)	B IN. (MM)	C IN. (MM)	D IN. (MM)	E IN. (MM)	F IN. (MM)	G IN. (MM)
024-030	CPRFCURB006A00	8 (203)	11 (279)	16-1/2 (419)	28-3/4 (730)	30-3/8 (771)	44-5/16 (1126)	45-15/16 (1167)
	CPRFCURB007A00	14 (356)	11 (279)	16-1/2 (419)	28-3/4 (730)	30-3/8 (771)	44-5/16 (1126)	45-15/16 (1167)
036-060	CPRFCURB008A00	8 (203)	16-3/16 (411)	17-3/8 (441)	40-1/4 (1022)	41-15/16 (1065)	44-7/16 (1129)	46-1/16 (1169)
	CPRFCURB009A00	14 (356)	16-3/16 (411)	17-3/8 (441)	40-1/4 (1022)	41-15/16 (1065)	44-7/16 (1129)	46-1/16 (1169)

NOTES:

1. Roof curb must be set up for unit being installed.
2. Seal strip must be applied, as required, to unit being installed.
3. Dimensions are in inches.
4. Dimension in ( ) are in millimeters.
5. Roof curb is made of 16-gauge steel.
6. Attach ductwork to curb (flanges of duct rest on curb).
7. Insulated panels: 1-in. thick fiberglass 1 lb. density.
8. When unit mounting screw is used (see Note A), a retainer bracket must be used as well. This bracket must also be used when required by code for hurricane or seismic conditions. This bracket is available through Micrometl.

48XT CORNER WEIGHTS (IN POUNDS)

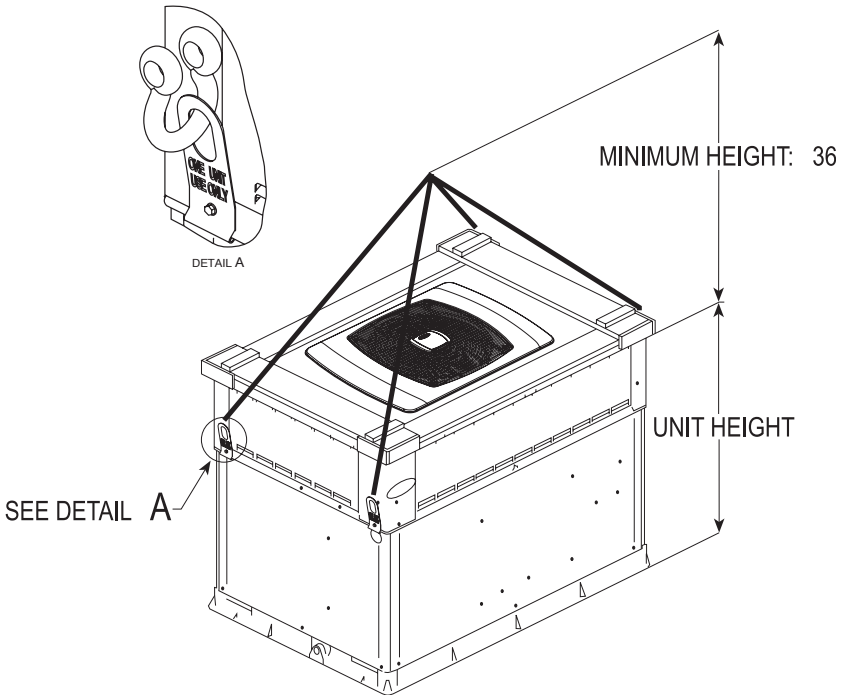

A06298

CABINET	MODEL	RIGGING WT (LB)	A	B	C	D
Small	48XT-024	462	100	100	92	171
	48XT-030	492	106	106	98	182
Large	48XT-036	533	110	123	100	200
	48XT-042	544	119	85	146	194
	48XT-048	560	124	93	148	195
	48XT-060	603	132	96	162	213

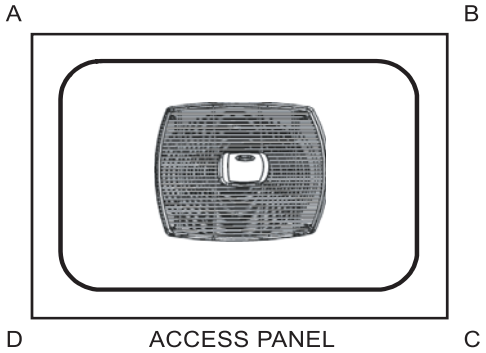

A06296

SELECTION PROCEDURE

Determine cooling and heating requirements at design conditions

Given:

REQUIRED COOLING CAPACITY (TC) . . . . . 34,500 BTUH
SENSIBLE HEAT CAPACITY (SHC) . . . . . 22,000 BTUH
REQUIRED HEATING CAPACITY (SHC) . . . . 42,000 BTUH
CONDENSER ENTERING AIR TEMPERATURE 95°F (35°C)
INDOOR-AIR TEMPERATURE . . 80°F (26.6°C) EDB, 67°F (19.4°C) EWB
EVAPORATOR AIR QUANTITY . . . . . 1200 CFM
ELECTRICAL CHARACTERISTICS 230-1-60

Select unit based on required cooling capacity

Enter Net Cooling Capacities table at condenser entering temperature of 95°F (35°C). The 036 unit at 1200 cfm and 67°F (19.4°C) ewb (entering wet bulb) will provide a total capacity of 34,600 Btuh and a SHC of 24,220 Btuh. Calculate SHC correction, if required, using Note 4 under Cooling Capacities tables.

Select heating capacity of unit to provide design condition requirement

In the Heating Capacities and Efficiencies table on page 4, note that the unit 036060 will provide 48,000 Btuh with an input of 60,000 Btuh.

Select unit that corresponds to power source available

The Electrical Data table shows that the unit is designed to operate at 208/230-1-60.

PERFORMANCE DATA-STANDARD ECM INDOOR MOTOR

Cooling Extended Performance Table

48XT024 High Cool

EVAPORATOR AIR		CONDENSER ENTERING AIR TEMPERATURES deg F																	
		75 (23.8°C)			85 (29.4°C)			95 (35°C)			105 (40.5°C)			115 (46.1°C)			125 (51.6°C)		
CFM	EWB	Capacity MBtuh		Total System KW	Capacity MBtuh		Total System KW	Capacity MBtuh		Total System KW	Capacity MBtuh		Total System KW	Capacity MBtuh		Total System KW	Capacity MBtuh		Total System KW
		Total	Sens		Total	Sens		Total	Sens		Total	Sens		Total	Sens		Total	Sens	
700	57	21.77	21.77	1.61	20.88	20.88	1.79	19.95	19.95	2.00	18.94	18.94	2.23	17.86	17.86	2.48	16.66	16.66	2.77
	62	22.40	18.69	1.61	21.29	18.21	1.80	20.13	17.70	2.00	18.95	18.95	2.23	17.86	17.86	2.48	16.66	16.66	2.77
	63	22.85	15.18	1.62	21.71	14.70	1.80	20.52	14.21	2.01	19.25	13.70	2.23	17.90	13.16	2.48	16.42	12.58	2.77
	67	24.66	15.72	1.64	23.44	15.24	1.83	22.15	14.75	2.03	20.79	14.24	2.26	19.34	13.70	2.51	17.74	13.12	2.79
	72	27.16	12.75	1.67	25.83	12.28	1.86	24.42	11.80	2.06	22.94	11.29	2.29	21.33	10.76	2.54	19.57	10.18	2.83
800	57	22.76	22.76	1.64	21.81	21.81	1.82	20.81	20.81	2.03	19.74	19.74	2.26	18.58	18.58	2.51	17.29	17.29	2.80
	62	22.97	20.16	1.64	21.84	21.76	1.82	20.81	20.81	2.03	19.74	19.74	2.26	18.58	18.58	2.51	17.29	17.29	2.80
	63	23.39	16.20	1.64	22.19	15.71	1.83	20.94	15.21	2.03	19.62	14.69	2.26	18.22	14.14	2.51	16.69	13.54	2.79
	67	25.22	16.81	1.67	23.94	16.32	1.85	22.60	15.82	2.05	21.18	15.30	2.28	19.67	14.74	2.53	18.01	14.14	2.82
	72	27.77	13.43	1.70	26.37	12.96	1.88	24.90	12.48	2.09	23.35	11.95	2.31	21.66	11.41	2.57	20.60	11.05	2.57

48XT024 Low Cool

EVAPORATOR AIR		CONDENSER ENTERING AIR TEMPERATURES deg F																	
		75 (23.8°C)			85 (29.4°C)			95 (35°C)			105 (40.5°C)			115 (46.1°C)			125 (51.6°C)		
CFM	EWB	Capacity MBtuh		Total System KW	Capacity MBtuh		Total System KW	Capacity MBtuh		Total System KW	Capacity MBtuh		Total System KW	Capacity MBtuh		Total System KW	Capacity MBtuh		Total System KW
		Total	Sens		Total	Sens		Total	Sens		Total	Sens		Total	Sens		Total	Sens	
525	57	16.65	16.65	1.05	15.95	15.95	1.20	15.21	15.21	1.37	14.40	14.40	1.57	13.52	13.52	1.80	12.55	12.55	2.07
	62	17.20	14.47	1.06	16.29	14.07	1.21	15.34	13.65	1.37	14.40	14.40	1.57	13.52	13.52	1.80	12.55	12.55	2.07
	63	17.61	11.75	1.06	16.69	11.36	1.21	15.70	10.96	1.38	14.64	10.53	1.57	13.50	10.07	1.80	12.27	9.58	2.06
	67	19.23	12.26	1.08	18.23	11.87	1.22	17.18	11.47	1.39	16.05	11.03	1.58	14.83	10.58	1.81	13.50	10.09	2.07
	72	21.48	10.05	1.09	20.41	9.66	1.24	19.26	9.26	1.41	18.02	8.84	1.60	16.69	8.39	1.83	15.24	7.90	2.09
600	57	17.52	17.52	1.08	16.77	16.77	1.23	15.96	15.96	1.39	15.10	15.10	1.59	14.15	14.15	1.82	13.11	13.11	2.09
	62	17.71	15.66	1.08	16.78	16.75	1.23	15.96	15.96	1.39	15.10	15.10	1.59	14.15	14.15	1.82	13.12	13.12	2.09
	63	18.10	12.58	1.08	17.12	12.18	1.23	16.09	11.76	1.39	14.98	11.32	1.59	13.80	10.85	1.81	12.51	10.35	2.08
	67	19.75	13.14	1.09	18.71	12.74	1.24	17.60	12.32	1.41	16.41	11.88	1.60	15.14	11.41	1.83	13.76	10.91	2.09
	72	22.06	10.61	1.11	20.93	10.21	1.26	19.72	9.80	1.43	18.41	9.36	1.62	17.03	8.91	1.85	15.51	8.41	2.11

See page 29 for cooling notes.

PERFORMANCE DATA-STANDARD ECM INDOOR MOTOR

Heating Capacity

48XT024 High

INDOOR AIR		OUTDOOR COIL ENTERING AIR TEMPERATURES deg F														
		-10 (-23.3°C)			0 (-17.7°C)			10 (-12.2°C)			17 (-8.3°C)			20 (-6.6°C)		
EDB	CFM	Capacity MBtuh		Total System KW	Capacity MBtuh		Total System KW	Capacity MBtuh		Total System KW	Capacity MBtuh		Total System KW	Capacity MBtuh		Total System KW
		Total	Integ		Total	Integ		Total	Integ		Total	Integ		Total	Integ	
60	700	4.21	3.88	1.12	6.40	5.89	1.21	9.38	8.61	1.32	11.90	10.85	1.42	14.22	12.90	1.45
	800	4.24	3.90	1.11	6.47	5.95	1.20	9.46	8.69	1.31	11.94	10.89	1.43	14.27	12.94	1.44
70	700	3.97	3.65	1.25	6.12	5.63	1.35	9.01	8.27	1.46	11.51	10.49	1.55	12.36	11.21	1.49
	800	4.02	3.70	1.24	6.20	5.71	1.34	9.12	8.37	1.45	11.60	10.58	1.55	12.46	11.30	1.66
80	700	3.77	3.47	1.38	5.83	5.36	1.49	8.62	7.91	1.61	11.03	10.06	1.70	11.85	10.75	1.75
	800	3.82	3.51	1.38	5.91	5.43	1.48	8.74	8.02	1.59	11.17	10.19	1.69	12.00	10.88	1.72

48XT024 High Con't.

INDOOR AIR		OUTDOOR COIL ENTERING AIR TEMPERATURES deg F														
		30 (-1.1°C)			40 (4.4°C)			47 (8.3°C)			50 (10°C)			60 (15.5°C)		
EDB	CFM	Capacity MBtuh		Total System KW	Capacity MBtuh		Total System KW	Capacity MBtuh		Total System KW	Capacity MBtuh		Total System KW	Capacity MBtuh		Total System KW
		Total	Integ		Total	Integ		Total	Integ		Total	Integ		Total	Integ	
60	700	16.65	14.60	1.58	19.30	19.30	1.69	21.15	21.15	1.75	22.00	22.00	1.78	25.14	25.14	1.92
	800	16.84	14.76	1.53	19.36	19.36	1.61	21.27	21.27	1.66	22.16	22.16	1.70	25.40	25.40	1.82
70	700	16.03	14.05	1.62	18.69	18.69	1.86	20.68	20.68	1.95	21.51	21.51	1.98	24.54	24.54	2.11
	800	16.25	14.24	1.68	18.95	18.95	1.79	20.80	20.80	1.85	21.65	21.65	1.87	24.82	24.82	2.00
80	700	14.91	13.06	1.89	17.97	17.97	2.03	20.04	20.04	2.14	20.96	20.96	2.20	23.91	23.91	2.32
	800	15.10	13.23	1.84	18.27	18.27	1.96	20.30	20.30	2.05	21.13	21.13	2.08	24.20	24.20	2.21

LEGEND

Cap.— Heating Capacity (1000 Btuh) (Includes Indoor–Fan Motor Heat)

db — Dry Bulb

kW — Total Power Input (Includes Compressor Motor Power Input Outdoor–Fan Motor Input, and Indoor–Fan Motor Input)

rh — Relative Humidity

NOTES:

Integrated capacity is maximum (instantaneous) capacity less the effect of frost on the outdoor coil and the heat required to defrost it.

PERFORMANCE DATA-STANDARD ECM INDOOR MOTOR

Heating Capacity

48XT024 Low

INDOOR AIR		OUTDOOR COIL ENTERING AIR TEMPERATURES deg F														
		-10 (-23.3°C)			0 (-17.7°C)			10 (-12.2°C)			17 (-8.3°C)			20 (-6.6°C)		
EDB	CFM	Capacity MBtuh		Total System KW	Capacity MBtuh		Total System KW	Capacity MBtuh		Total System KW	Capacity MBtuh		Total System KW	Capacity MBtuh		Total System KW
		Total	Integ		Total	Integ		Total	Integ		Total	Integ		Total	Integ	
60	525	2.95	2.72	1.05	4.89	4.50	1.11	7.22	6.63	1.18	8.74	7.97	1.22	9.48	8.60	1.24
	600	2.99	2.75	1.04	4.97	4.58	1.09	7.31	6.71	1.17	8.89	8.11	1.20	9.64	8.74	1.22
70	525	2.81	2.59	1.22	4.72	4.34	1.29	6.73	6.18	1.35	8.26	7.53	1.38	8.97	8.14	1.40
	600	2.87	2.64	1.21	4.80	4.41	1.28	6.87	6.30	1.34	8.40	7.66	1.37	9.13	8.28	1.38
80	525	2.61	2.41	1.37	4.45	4.09	1.46	6.26	5.75	1.52	7.78	7.10	1.56	8.46	7.68	1.57
	600	2.66	2.46	1.36	4.53	4.16	1.44	6.38	5.86	1.51	7.92	7.22	1.54	8.60	7.80	1.56

48XT024 Low Con't.

INDOOR AIR		OUTDOOR COIL ENTERING AIR TEMPERATURES deg F														
		30 (-1.1°C)			40 (4.4°C)			47 (8.3°C)			50 (10°C)			60 (15.5°C)		
EDB	CFM	Capacity MBtuh		Total System KW	Capacity MBtuh		Total System KW	Capacity MBtuh		Total System KW	Capacity MBtuh		Total System KW	Capacity MBtuh		Total System KW
		Total	Integ		Total	Integ		Total	Integ		Total	Integ		Total	Integ	
60	525	12.17	10.66	1.30	15.20	15.20	1.37	17.28	17.28	1.41	18.16	18.16	1.44	19.43	19.43	1.44
	600	12.37	10.84	1.27	15.22	15.22	1.33	16.79	16.79	1.37	16.85	16.85	1.36	16.78	16.78	1.29
70	525	11.60	10.17	1.46	14.55	14.55	1.54	16.84	16.84	1.61	17.86	17.86	1.64	20.96	20.96	1.71
	600	11.80	10.34	1.43	14.80	14.80	1.50	16.80	16.80	1.54	17.64	17.64	1.57	18.39	18.39	1.53
80	525	11.00	9.64	1.64	13.91	13.91	1.72	16.15	16.15	1.79	17.17	17.17	1.83	20.53	20.53	1.91
	600	11.21	9.83	1.61	14.16	14.16	1.68	16.40	16.40	1.74	17.36	17.36	1.77	20.33	20.33	1.85

LEGEND

Cap.— Heating Capacity (1000 Btuh) (Includes Indoor–Fan Motor Heat)

db — Dry Bulb

kW — Total Power Input (Includes Compressor Motor Power Input Outdoor–Fan Motor Input, and Indoor–Fan Motor Input)

rh — Relative Humidity

NOTES:

Integrated capacity is maximum (instantaneous) capacity less the effect of frost on the outdoor coil and the heat required to defrost it.

PERFORMANCE DATA-STANDARD ECM INDOOR MOTOR

Cooling Extended Performance Table

48XT030 High Cool

EVAPORATOR AIR		CONDENSER ENTERING AIR TEMPERATURES deg F																	
		75 (23.8°C)			85 (29.4°C)			95 (35°C)			105 (40.5°C)			115 (46.1°C)			125 (51.6°C)		
CFM	EWB	Capacity MBtuh		Total System KW	Capacity MBtuh		Total System KW	Capacity MBtuh		Total System KW	Capacity MBtuh		Total System KW	Capacity MBtuh		Total System KW	Capacity MBtuh		Total System KW
		Total	Sens		Total	Sens		Total	Sens		Total	Sens		Total	Sens		Total	Sens	
875	57	27.90	27.90	2.05	26.73	26.73	2.27	25.47	25.47	2.52	24.09	24.09	2.79	22.56	22.56	3.10	20.81	20.81	3.44
	62	28.72	23.85	2.06	27.25	23.21	2.28	25.70	22.53	2.52	24.09	24.09	2.79	22.56	22.56	3.10	20.81	20.81	3.44
	63	29.28	19.34	2.07	27.78	18.72	2.29	26.18	18.07	2.53	24.46	17.38	2.80	22.58	16.64	3.10	20.50	15.82	3.43
	67	31.48	19.99	2.10	29.85	19.36	2.32	28.11	18.70	2.56	26.23	18.00	2.83	24.19	17.25	3.13	21.92	16.42	3.47
	72	34.49	16.13	2.14	32.69	15.50	2.36	30.77	14.85	2.61	28.70	14.15	2.88	26.43	13.40	3.18	26.31	13.36	3.19
1000	57	29.10	29.10	2.09	27.84	27.84	2.32	26.48	26.48	2.56	25.00	25.00	2.84	23.34	23.34	3.15	21.47	21.47	3.49
	62	29.40	25.68	2.10	27.90	27.75	2.32	26.48	26.48	2.56	25.00	25.00	2.84	23.34	23.34	3.15	21.47	21.47	3.49
	63	29.91	20.61	2.10	28.33	19.98	2.32	26.66	19.31	2.57	24.86	18.60	2.83	22.90	17.84	3.13	20.75	17.00	3.47
	67	32.13	21.34	2.14	30.42	20.69	2.36	28.60	20.02	2.60	26.64	19.30	2.87	24.51	18.53	3.17	22.47	16.98	3.51
	72	35.18	16.96	2.18	33.29	16.32	2.40	31.27	15.65	2.65	29.11	14.94	2.92	26.76	14.18	3.22	24.19	13.36	3.55

48XT030 Low Cool

EVAPORATOR AIR		CONDENSER ENTERING AIR TEMPERATURES deg F																	
		75 (23.8°C)			85 (29.4°C)			95 (35°C)			105 (40.5°C)			115 (46.1°C)			125 (51.6°C)		
CFM	EWB	Capacity MBtuh		Total System KW	Capacity MBtuh		Total System KW	Capacity MBtuh		Total System KW	Capacity MBtuh		Total System KW	Capacity MBtuh		Total System KW	Capacity MBtuh		Total System KW
		Total	Sens		Total	Sens		Total	Sens		Total	Sens		Total	Sens		Total	Sens	
615	57	20.32	20.32	1.29	19.50	19.50	1.48	18.60	18.60	1.70	17.60	17.60	1.95	16.20	16.20	2.21	15.23	15.23	2.58
	62	21.08	17.65	1.30	20.01	17.18	1.49	18.86	16.67	1.70	17.62	17.58	1.95	16.49	16.49	2.24	15.23	15.23	2.58
	63	21.55	14.40	1.30	20.47	13.94	1.49	19.28	13.44	1.70	17.99	12.90	1.95	16.58	12.33	2.24	15.02	11.71	2.58
	67	23.40	14.96	1.32	22.22	14.49	1.51	20.93	13.99	1.72	19.51	13.44	1.97	17.97	12.85	2.26	16.26	12.24	2.60
	72	25.95	12.26	1.35	24.65	11.79	1.53	23.20	11.28	1.75	21.63	10.73	2.00	19.91	10.14	2.28	18.01	9.51	2.62
700	57	21.32	21.32	1.31	20.44	20.44	1.50	19.46	19.46	1.72	18.38	18.38	1.97	17.17	17.17	2.26	15.82	15.82	2.60
	62	21.67	19.04	1.31	20.56	18.54	1.50	19.46	19.46	1.72	18.38	18.38	1.97	17.17	17.17	2.26	15.82	15.82	2.60
	63	22.13	15.36	1.32	20.98	14.89	1.51	19.74	14.38	1.72	18.38	13.83	1.97	16.90	13.24	2.26	15.28	12.60	2.60
	67	24.00	15.98	1.34	22.76	15.50	1.53	21.40	14.98	1.74	19.91	14.42	1.99	18.29	13.82	2.28	16.52	13.17	2.61
	72	26.61	12.91	1.36	25.22	12.42	1.55	23.71	11.90	1.76	22.06	11.34	2.01	20.25	10.74	2.30	18.28	10.09	2.63

See page 29 for cooling notes.

PERFORMANCE DATA-STANDARD ECM INDOOR MOTOR

Heating Capacity

48XT030 High

INDOOR AIR		OUTDOOR COIL ENTERING AIR TEMPERATURES deg F														
		-10 (-23.3°C)			0 (-17.7°C)			10 (-12.2°C)			17 (-8.3°C)			20 (-6.6°C)		
EDB	CFM	Capacity MBtuh		Total System KW	Capacity MBtuh		Total System KW	Capacity MBtuh		Total System KW	Capacity MBtuh		Total System KW	Capacity MBtuh		Total System KW
		Total	Integ		Total	Integ		Total	Integ		Total	Integ		Total	Integ	
60	875	7.07	6.51	1.56	9.35	8.60	1.64	12.08	11.09	1.72	14.34	13.07	1.78	15.42	13.99	1.81
	1000	7.16	6.59	1.56	9.46	8.70	1.64	12.23	11.23	1.71	14.51	13.23	1.77	15.61	14.16	1.79
70	875	6.74	6.20	1.73	9.00	8.28	1.82	11.66	10.70	1.91	13.82	12.60	1.97	14.85	13.46	2.00
	1000	6.84	6.29	1.73	9.12	8.39	1.82	11.80	10.83	1.90	14.00	12.76	1.95	15.04	13.64	1.98
80	875	6.31	5.81	1.90	8.56	7.88	2.00	11.20	10.28	2.10	13.30	12.13	2.17	14.28	12.95	2.20
	1000	6.42	5.91	1.90	8.69	8.00	2.00	11.35	10.42	2.09	13.48	12.29	2.15	14.46	13.11	2.18

48XT030 High Con't.

INDOOR AIR		OUTDOOR COIL ENTERING AIR TEMPERATURES deg F														
		30 (-1.1°C)			40 (4.4°C)			47 (8.3°C)			50 (10°C)			60 (15.5°C)		
EDB	CFM	Capacity MBtuh		Total System KW	Capacity MBtuh		Total System KW	Capacity MBtuh		Total System KW	Capacity MBtuh		Total System KW	Capacity MBtuh		Total System KW
		Total	Integ		Total	Integ		Total	Integ		Total	Integ		Total	Integ	
60	875	19.48	17.07	1.91	24.32	24.32	2.04	28.09	28.09	2.08	29.61	29.61	2.12	35.99	35.99	2.18
	1000	19.75	17.31	1.89	24.63	24.63	2.02	28.28	28.28	2.15	30.05	30.05	2.19	36.32	36.32	2.32
70	875	18.76	16.44	2.11	23.39	23.39	2.23	27.23	27.23	2.34	29.07	29.07	2.40	35.34	35.34	2.46
	1000	19.03	16.67	2.08	23.75	23.75	2.20	27.60	27.60	2.31	29.24	29.24	2.34	35.85	35.85	2.54
80	875	18.00	15.77	2.31	22.48	22.48	2.44	26.17	26.17	2.56	27.94	27.94	2.62	34.42	34.42	2.70
	1000	18.32	16.05	2.28	22.83	22.83	2.40	26.59	26.59	2.51	28.38	28.38	2.57	34.50	34.50	2.82

LEGEND

Cap.— Heating Capacity (1000 Btuh) (Includes Indoor–Fan Motor Heat)

db — Dry Bulb

kW — Total Power Input (Includes Compressor Motor Power Input Outdoor–Fan Motor Input, and Indoor–Fan Motor Input)

rh — Relative Humidity

NOTES:

Integrated capacity is maximum (instantaneous) capacity less the effect of frost on the outdoor coil and the heat required to defrost it.

PERFORMANCE DATA-STANDARD ECM INDOOR MOTOR

Heating Capacity

48XT030 Low

INDOOR AIR		OUTDOOR COIL ENTERING AIR TEMPERATURES deg F														
		-10 (-23.3°C)			0 (-17.7°C)			10 (-12.2°C)			17 (-8.3°C)			20 (-6.6°C)		
EDB	CFM	Capacity MBtuh		Total System KW	Capacity MBtuh		Total System KW	Capacity MBtuh		Total System KW	Capacity MBtuh		Total System KW	Capacity MBtuh		Total System KW
		Total	Integ		Total	Integ		Total	Integ		Total	Integ		Total	Integ	
60	615	3.77	3.47	1.12	5.75	5.29	1.20	8.06	7.40	1.27	9.90	9.03	1.32	10.75	9.75	1.34
	700	3.81	3.51	1.12	5.82	5.36	1.19	8.16	7.49	1.25	10.01	9.13	1.29	10.87	9.86	1.31
70	615	3.34	3.07	1.29	5.44	5.00	1.38	7.66	7.03	1.46	9.47	8.64	1.51	10.31	9.35	1.53
	700	3.42	3.15	1.29	5.55	5.10	1.37	7.75	7.11	1.44	9.60	8.75	1.48	10.45	9.47	1.50
80	615	2.85	2.62	1.47	4.84	4.45	1.57	7.16	6.57	1.65	8.97	8.18	1.71	9.80	8.89	1.73
	700	2.91	2.68	1.47	4.93	4.54	1.56	7.27	6.67	1.63	9.10	8.30	1.68	9.94	9.02	1.70

48XT030 Low Con't.

INDOOR AIR		OUTDOOR COIL ENTERING AIR TEMPERATURES deg F														
		30 (-1.1°C)			40 (4.4°C)			47 (8.3°C)			50 (10°C)			60 (15.5°C)		
EDB	CFM	Capacity MBtuh		Total System KW	Capacity MBtuh		Total System KW	Capacity MBtuh		Total System KW	Capacity MBtuh		Total System KW	Capacity MBtuh		Total System KW
		Total	Integ		Total	Integ		Total	Integ		Total	Integ		Total	Integ	
60	615	13.95	12.23	1.41	17.78	17.78	1.50	20.83	20.83	1.57	22.25	22.25	1.61	27.83	27.83	1.75
	700	14.14	12.39	1.37	18.04	18.04	1.45	21.17	21.17	1.51	22.64	22.64	1.54	28.00	28.00	1.62
70	615	13.39	11.73	1.61	17.11	17.11	1.70	20.08	20.08	1.78	21.45	21.45	1.81	26.70	26.70	1.96
	700	13.58	11.90	1.57	17.39	17.39	1.65	20.40	20.40	1.71	21.80	21.80	1.74	27.26	27.26	1.87
80	615	12.86	11.27	1.82	16.41	16.41	1.92	19.37	19.37	2.01	20.70	20.70	2.05	25.66	25.66	2.20
	700	13.03	11.42	1.78	16.66	16.66	1.86	19.66	19.66	1.93	21.02	21.02	1.96	26.16	26.16	2.09

LEGEND

Cap.— Heating Capacity (1000 Btuh) (Includes Indoor–Fan Motor Heat)

db — Dry Bulb

kW — Total Power Input (Includes Compressor Motor Power Input Outdoor–Fan Motor Input, and Indoor–Fan Motor Input)

rh — Relative Humidity

NOTES:

Integrated capacity is maximum (instantaneous) capacity less the effect of frost on the outdoor coil and the heat required to defrost it.

PERFORMANCE DATA-STANDARD ECM INDOOR MOTOR

Cooling Extended Performance Table

48XT036 High Cool

EVAPORATOR AIR		CONDENSER ENTERING AIR TEMPERATURES deg F																	
		75 (23.8°C)			85 (29.4°C)			95 (35°C)			105 (40.5°C)			115 (46.1°C)			125 (51.6°C)		
CFM	EWB	Capacity MBtuh		Total System KW	Capacity MBtuh		Total System KW	Capacity MBtuh		Total System KW	Capacity MBtuh		Total System KW	Capacity MBtuh		Total System KW	Capacity MBtuh		Total System KW
		Total	Sens		Total	Sens		Total	Sens		Total	Sens		Total	Sens		Total	Sens	
1050	57	33.64	33.64	2.28	32.32	32.32	2.53	30.90	30.90	2.81	29.36	29.36	3.11	27.65	27.65	3.46	25.71	25.71	3.84
	62	34.47	28.72	2.29	32.83	28.00	2.54	31.11	27.24	2.81	29.36	29.36	3.11	27.65	27.65	3.46	25.71	25.71	3.84
	63	35.12	23.25	2.29	33.44	22.56	2.54	31.65	21.83	2.81	29.73	21.07	3.12	27.64	20.25	3.45	25.33	19.35	3.83
	67	37.76	24.04	2.32	35.94	23.34	2.57	34.00	22.61	2.84	31.91	21.83	3.15	29.65	21.00	3.49	27.14	20.10	3.87
	73	42.16	18.41	2.37	40.12	17.73	2.62	37.93	17.01	2.90	35.58	16.24	3.20	33.02	15.43	3.54	30.21	14.53	3.92
1200	57	35.06	35.06	2.32	33.64	33.64	2.58	32.12	32.12	2.85	30.46	30.46	3.16	28.63	28.63	3.50	26.56	26.56	3.89
	62	35.29	30.91	2.33	33.64	33.64	2.58	32.12	32.12	2.85	30.46	30.46	3.16	28.63	28.63	3.50	26.56	26.56	3.89
	63	35.86	24.79	2.33	34.09	24.08	2.58	32.22	23.34	2.85	30.23	22.56	3.15	28.05	21.71	3.49	25.66	20.78	3.87
	67	38.52	25.68	2.36	36.62	24.97	2.61	34.60	24.22	2.88	32.43	23.43	3.19	30.06	22.57	3.53	27.47	21.64	3.90
	73	42.99	19.31	2.41	40.85	18.61	2.66	38.57	17.87	2.93	36.13	17.09	3.24	33.48	16.25	3.58	30.56	15.35	3.96

48XT036 Low Cool

EVAPORATOR AIR		CONDENSER ENTERING AIR TEMPERATURES deg F																	
		75 (23.8°C)			85 (29.4°C)			95 (35°C)			105 (40.5°C)			115 (46.1°C)			125 (51.6°C)		
CFM	EWB	Capacity MBtuh		Total System KW	Capacity MBtuh		Total System KW	Capacity MBtuh		Total System KW	Capacity MBtuh		Total System KW	Capacity MBtuh		Total System KW	Capacity MBtuh		Total System KW
		Total	Sens		Total	Sens		Total	Sens		Total	Sens		Total	Sens		Total	Sens	
745	57	23.27	23.27	1.46	22.34	22.34	1.65	21.31	21.31	1.87	20.19	20.19	2.12	18.95	18.95	2.41	17.58	17.58	2.76
	62	23.91	20.06	1.46	22.70	19.54	1.65	21.41	18.97	1.87	20.19	20.19	2.12	18.95	18.95	2.41	17.58	17.58	2.76
	63	24.46	16.28	1.47	23.21	15.77	1.66	21.87	15.23	1.87	20.42	14.65	2.12	18.85	14.03	2.41	17.14	13.36	2.75
	67	26.63	16.96	1.48	25.29	16.45	1.67	23.85	15.90	1.89	22.28	15.32	2.14	20.58	14.69	2.43	18.72	14.02	2.77
	72	29.67	13.86	1.51	28.20	13.35	1.70	26.61	12.81	1.91	24.89	12.23	2.16	23.01	11.60	2.45	20.96	10.93	2.79
850	57	24.45	24.45	1.48	23.43	23.43	1.67	22.33	22.33	1.89	21.11	21.11	2.14	19.80	19.80	2.44	18.32	18.32	2.78
	62	24.61	21.68	1.48	23.43	23.43	1.67	22.33	22.33	1.89	21.12	21.12	2.14	19.80	19.80	2.44	18.32	18.32	2.78
	63	25.11	17.42	1.49	23.80	16.89	1.68	22.39	16.34	1.89	20.88	15.74	2.14	19.24	15.10	2.43	17.46	14.42	2.77
	67	27.33	18.17	1.50	25.92	17.64	1.69	24.40	17.08	1.91	22.76	16.48	2.15	20.99	15.84	2.44	19.06	15.15	2.78
	72	30.44	14.64	1.53	28.89	14.12	1.71	27.21	13.55	1.93	25.40	12.96	2.17	23.45	12.33	2.46	21.30	11.65	2.80

See page 29 for cooling notes.

PERFORMANCE DATA-STANDARD ECM INDOOR MOTOR

Heating Capacity

48XT036 High

INDOOR AIR		OUTDOOR COIL ENTERING AIR TEMPERATURES deg F														
		-10 (-23.3°C)			0 (-17.7°C)			10 (-12.2°C)			17 (-8.3°C)			20 (-6.6°C)		
EDB	CFM	Capacity MBtuh		Total System KW	Capacity MBtuh		Total System KW	Capacity MBtuh		Total System KW	Capacity MBtuh		Total System KW	Capacity MBtuh		Total System KW
		Total	Integ		Total	Integ		Total	Integ		Total	Integ		Total	Integ	
60	1050	8.62	7.93	1.43	11.33	10.43	1.60	14.73	13.52	1.78	17.57	16.02	1.92	18.91	17.15	1.99
	1200	8.70	8.01	1.43	11.45	10.53	1.59	14.88	13.66	1.77	17.76	16.19	1.90	19.11	17.33	1.97
70	1050	8.34	7.68	1.59	11.02	10.14	1.77	14.26	13.09	1.97	16.99	15.49	2.12	18.32	16.61	2.19
	1200	8.44	7.77	1.59	11.14	10.25	1.77	14.42	13.24	1.96	17.20	15.68	2.10	18.53	16.81	2.17
80	1050	7.96	7.32	1.74	10.60	9.76	1.95	13.78	12.65	2.17	16.38	14.93	2.33	17.63	15.99	2.40
	1200	8.07	7.43	1.74	10.74	9.88	1.94	13.93	12.79	2.15	16.59	15.12	2.31	17.86	16.19	2.38

48XT036 High Con't.

INDOOR AIR		OUTDOOR COIL ENTERING AIR TEMPERATURES deg F														
		30 (-1.1°C)			40 (4.4°C)			47 (8.3°C)			50 (10°C)			60 (15.5°C)		
EDB	CFM	Capacity MBtuh		Total System KW	Capacity MBtuh		Total System KW	Capacity MBtuh		Total System KW	Capacity MBtuh		Total System KW	Capacity MBtuh		Total System KW
		Total	Integ		Total	Integ		Total	Integ		Total	Integ		Total	Integ	
60	1050	23.95	20.99	2.22	29.99	29.99	2.51	34.51	34.51	2.69	36.57	36.57	2.79	43.09	43.09	3.12
	1200	24.20	21.21	2.20	30.20	30.20	2.45	34.82	34.82	2.67	36.95	36.95	2.74	43.39	43.39	2.88
70	1050	23.16	20.29	2.44	28.99	28.99	2.73	33.82	33.82	2.98	35.98	35.98	3.08	42.90	42.90	3.44
	1200	23.44	20.54	2.41	29.28	29.28	2.71	33.60	33.60	2.90	35.59	35.59	3.00	43.10	43.10	3.30
80	1050	22.38	19.61	2.67	28.03	28.03	2.99	32.65	32.65	3.24	34.87	34.87	3.37	42.66	42.66	3.75
	1200	22.66	19.86	2.64	28.36	28.36	2.94	33.00	33.00	3.21	34.97	34.97	3.29	42.80	42.80	3.69

PERFORMANCE DATA-STANDARD ECM INDOOR MOTOR

Heating Capacity

48XT036 Low

INDOOR AIR		OUTDOOR COIL ENTERING AIR TEMPERATURES deg F														
		-10 (-23.3°C)			0 (-17.7°C)			10 (-12.2°C)			17 (-8.3°C)			20 (-6.6°C)		
EDB	CFM	Capacity MBtuh		Total System KW	Capacity MBtuh		Total System KW	Capacity MBtuh		Total System KW	Capacity MBtuh		Total System KW	Capacity MBtuh		Total System KW
		Total	Integ		Total	Integ		Total	Integ		Total	Integ		Total	Integ	
60	745	3.84	3.53	1.62	6.63	6.10	1.68	9.48	8.70	1.72	11.69	10.66	1.74	12.69	11.51	1.75
	850	3.91	3.60	1.62	6.71	6.17	1.67	9.61	8.82	1.70	11.84	10.80	1.71	12.85	11.66	1.72
70	745	3.10	2.86	1.82	5.88	5.41	1.89	8.83	8.10	1.93	11.03	10.06	1.95	12.02	10.90	1.96
	850	3.23	2.98	1.82	6.01	5.53	1.89	8.98	8.24	1.92	11.20	10.21	1.93	12.20	11.07	1.94
80	745	2.22	2.05	2.03	5.00	4.60	2.10	8.01	7.35	2.15	10.24	9.33	2.18	11.23	10.18	2.19
	850	2.34	2.16	2.04	5.12	4.71	2.11	8.17	7.49	2.14	10.42	9.50	2.16	11.42	10.36	2.16

48XT036 Low Con't.

INDOOR AIR		OUTDOOR COIL ENTERING AIR TEMPERATURES deg F														
		30 (-1.1°C)			40 (4.4°C)			47 (8.3°C)			50 (10°C)			60 (15.5°C)		
EDB	CFM	Capacity MBtuh		Total System KW	Capacity MBtuh		Total System KW	Capacity MBtuh		Total System KW	Capacity MBtuh		Total System KW	Capacity MBtuh		Total System KW
		Total	Integ		Total	Integ		Total	Integ		Total	Integ		Total	Integ	
60	745	16.25	14.24	1.78	20.33	20.33	1.81	23.56	23.56	1.84	25.01	25.01	1.85	30.27	30.27	1.90
	850	16.46	14.42	1.74	20.70	20.70	1.76	23.96	23.96	1.78	25.46	25.46	1.78	30.88	30.88	1.82
70	745	15.55	13.62	1.99	19.45	19.45	2.02	22.61	22.61	2.05	24.02	24.02	2.06	29.09	29.09	2.11
	850	15.78	13.82	1.95	19.78	19.78	1.97	23.00	23.00	1.98	24.44	24.44	1.99	29.68	29.68	2.02
80	745	14.74	12.91	2.22	18.60	18.60	2.26	21.56	21.56	2.28	22.94	22.94	2.29	27.95	27.95	2.35
	850	14.98	13.13	2.18	18.90	18.90	2.20	21.95	21.95	2.21	23.44	23.44	2.22	28.50	28.50	2.25

LEGEND

Cap.— Heating Capacity (1000 Btuh) (Includes Indoor–Fan Motor Heat)

db — Dry Bulb

kW — Total Power Input (Includes Compressor Motor Power Input Outdoor–Fan Motor Input, and Indoor–Fan Motor Input)

rh — Relative Humidity

NOTES:

Integrated capacity is maximum (instantaneous) capacity less the effect of frost on the outdoor coil and the heat required to defrost it.

PERFORMANCE DATA-STANDARD ECM INDOOR MOTOR

Cooling Extended Performance Table

48XT042 High Cool

EVAPORATOR AIR		CONDENSER ENTERING AIR TEMPERATURES deg F																	
		75 (23.8°C)			85 (29.4°C)			95 (35°C)			105 (40.5°C)			115 (46.1°C)			125 (51.6°C)		
CFM	EWB	Capacity MBtuh		Total System KW	Capacity MBtuh		Total System KW	Capacity MBtuh		Total System KW	Capacity MBtuh		Total System KW	Capacity MBtuh		Total System KW	Capacity MBtuh		Total System KW
		Total	Sens		Total	Sens		Total	Sens		Total	Sens		Total	Sens		Total	Sens	
1225	57	40.34	40.34	2.76	38.56	38.56	3.03	36.60	36.60	3.32	35.21	35.21	3.58	32.79	32.79	3.93	29.04	29.04	4.37
	62	41.24	37.05	2.77	39.06	36.02	3.04	36.71	36.39	3.33	35.21	35.21	3.57	32.79	32.79	3.93	29.04	29.04	4.37
	63	42.00	29.94	2.78	39.74	28.96	3.05	37.29	27.90	3.34	35.56	27.16	3.58	32.52	25.89	3.92	28.29	24.13	4.35
	67	45.04	30.93	2.84	42.59	29.93	3.10	39.90	28.85	3.39	38.03	28.11	3.63	34.81	26.85	3.98	30.12	25.04	4.40
	72	49.21	24.77	2.91	46.48	23.77	3.17	43.50	22.69	3.46	44.33	22.99	3.52	41.24	21.88	3.87	32.75	18.96	4.47
1400	57	41.96	41.96	2.82	40.04	40.04	3.10	37.92	37.92	3.39	36.46	36.46	3.64	33.86	33.86	4.00	29.82	29.82	4.43
	62	42.17	39.80	2.83	40.04	40.04	3.10	37.92	37.92	3.39	36.46	36.46	3.64	33.86	33.86	4.00	29.82	29.82	4.43
	63	42.81	31.90	2.84	40.45	30.89	3.10	37.88	29.81	3.39	36.05	29.03	3.63	31.99	27.35	4.03	28.59	25.92	4.40
	67	45.87	33.01	2.89	43.30	31.98	3.15	40.50	30.88	3.44	38.65	30.16	3.69	35.36	28.88	4.03	30.38	26.96	4.45
	72	50.09	26.04	2.96	47.23	25.02	3.23	44.13	23.92	3.51	45.09	24.26	3.58	41.83	23.12	3.93	32.98	20.13	4.51

48XT042 Low Cool

EVAPORATOR AIR		CONDENSER ENTERING AIR TEMPERATURES deg F																	
		75 (23.8°C)			85 (29.4°C)			95 (35°C)			105 (40.5°C)			115 (46.1°C)			125 (51.6°C)		
CFM	EWB	Capacity MBtuh		Total System KW	Capacity MBtuh		Total System KW	Capacity MBtuh		Total System KW	Capacity MBtuh		Total System KW	Capacity MBtuh		Total System KW	Capacity MBtuh		Total System KW
		Total	Sens		Total	Sens		Total	Sens		Total	Sens		Total	Sens		Total	Sens	
855	57	28.20	28.20	1.89	27.00	27.00	2.11	25.67	25.67	2.35	24.16	24.16	2.63	22.43	22.43	2.94	20.50	20.50	3.29
	62	28.99	24.09	1.89	27.46	23.43	2.11	26.46	22.99	2.31	24.16	24.16	2.63	22.43	22.43	2.94	20.48	20.48	3.29
	63	29.61	19.56	1.89	28.04	18.92	2.11	26.32	18.23	2.35	24.41	17.47	2.63	22.29	16.64	2.95	19.93	15.73	3.30
	67	32.05	20.31	1.89	30.33	19.65	2.11	28.43	18.94	2.35	26.33	18.16	2.62	23.99	17.30	2.92	21.52	16.42	3.28
	72	35.41	16.51	1.89	33.47	15.84	2.10	31.36	15.12	2.34	31.76	15.26	2.28	26.40	13.49	2.90	24.07	12.74	3.25
975	57	29.53	29.53	1.90	28.23	28.23	2.12	26.78	26.78	2.36	25.14	25.14	2.64	23.27	23.27	2.95	21.29	21.29	3.29
	62	29.77	25.99	1.90	28.23	28.23	2.12	26.78	26.78	2.36	25.14	25.14	2.64	23.27	23.27	2.95	21.29	21.29	3.29
	63	30.34	20.89	1.90	28.69	20.23	2.12	26.88	19.52	2.37	24.87	18.73	2.64	22.66	17.88	2.96	20.20	16.93	3.31
	67	32.81	21.71	1.91	31.00	21.04	2.12	29.00	20.30	2.36	28.00	19.93	2.59	24.36	18.62	2.93	21.97	17.76	3.29
	72	36.21	17.40	1.91	34.17	16.72	2.12	31.95	16.00	2.35	31.03	15.68	2.58	30.23	15.42	2.60	24.42	13.57	3.26

See page 29 for cooling notes.

PERFORMANCE DATA-STANDARD ECM INDOOR MOTOR

Heating Capacity

48XT042 High

INDOOR AIR		OUTDOOR COIL ENTERING AIR TEMPERATURES deg F														
		-10 (-23.3°C)			0 (-17.7°C)			10 (-12.2°C)			17 (-8.3°C)			20 (-6.6°C)		
EDB	CFM	Capacity MBtuh		Total System KW	Capacity MBtuh		Total System KW	Capacity MBtuh		Total System KW	Capacity MBtuh		Total System KW	Capacity MBtuh		Total System KW
		Total	Integ		Total	Integ		Total	Integ		Total	Integ		Total	Integ	
60	1225	10.65	9.80	2.06	13.99	12.87	2.19	17.85	16.39	2.32	21.02	19.17	2.41	22.53	20.43	2.46
	1400	10.79	9.92	2.08	14.15	13.02	2.20	18.04	16.56	2.32	21.26	19.39	2.41	22.79	20.67	2.45
70	1225	10.16	9.34	2.28	13.49	12.42	2.42	17.32	15.89	2.55	20.37	18.58	2.66	21.80	19.77	2.70
	1400	10.32	9.49	2.29	13.66	12.57	2.42	17.52	16.08	2.55	20.60	18.78	2.65	22.06	20.01	2.69
80	1225	9.53	8.77	2.49	12.89	11.86	2.64	16.69	15.32	2.80	19.70	17.96	2.91	21.10	19.14	2.96
	1400	9.69	8.92	2.51	13.07	12.03	2.65	16.90	15.51	2.80	19.94	18.18	2.90	21.36	19.37	2.94

48XT042 High Con't.

INDOOR AIR		OUTDOOR COIL ENTERING AIR TEMPERATURES deg F														
		30 (-1.1°C)			40 (4.4°C)			47 (8.3°C)			50 (10°C)			60 (15.5°C)		
EDB	CFM	Capacity MBtuh		Total System KW	Capacity MBtuh		Total System KW	Capacity MBtuh		Total System KW	Capacity MBtuh		Total System KW	Capacity MBtuh		Total System KW
		Total	Integ		Total	Integ		Total	Integ		Total	Integ		Total	Integ	
60	1225	28.26	24.77	2.62	35.01	35.01	2.81	40.36	40.36	2.97	42.96	42.96	3.05	51.37	51.37	3.25
	1400	28.60	25.06	2.60	35.38	35.38	2.79	40.37	40.37	2.91	43.00	43.00	2.96	51.50	51.50	3.19
70	1225	27.38	23.99	2.87	33.83	33.83	3.06	39.05	39.05	3.22	41.60	41.60	3.31	50.54	50.54	3.54
	1400	27.71	24.28	2.85	34.27	34.27	3.03	39.50	39.50	3.20	41.96	41.96	3.27	50.80	50.80	3.48
80	1225	26.37	23.10	3.13	32.67	32.67	3.34	37.72	37.72	3.50	40.19	40.19	3.59	49.42	49.42	3.92
	1400	26.72	23.41	3.11	33.12	33.12	3.30	38.23	38.23	3.46	40.71	40.71	3.55	49.70	49.70	3.78

LEGEND

Cap.— Heating Capacity (1000 Btuh) (Includes Indoor–Fan Motor Heat)

db — Dry Bulb

kW — Total Power Input (Includes Compressor Motor Power Input Outdoor–Fan Motor Input, and Indoor–Fan Motor Input)

rh — Relative Humidity

NOTES:

Integrated capacity is maximum (instantaneous) capacity less the effect of frost on the outdoor coil and the heat required to defrost it.

PERFORMANCE DATA-STANDARD ECM INDOOR MOTOR

Heating Capacity

48XT042 Low

INDOOR AIR		OUTDOOR COIL ENTERING AIR TEMPERATURES deg F														
		-10 (-23.3°C)			0 (-17.7°C)			10 (-12.2°C)			17 (-8.3°C)			20 (-6.6°C)		
EDB	CFM	Capacity MBtuh		Total System KW	Capacity MBtuh		Total System KW	Capacity MBtuh		Total System KW	Capacity MBtuh		Total System KW	Capacity MBtuh		Total System KW
		Total	Integ		Total	Integ		Total	Integ		Total	Integ		Total	Integ	
60	855	5.94	5.46	1.70	8.96	8.24	1.77	12.26	11.25	1.84	14.78	13.47	1.89	15.91	14.43	1.91
	975	6.03	5.55	1.69	9.08	8.36	1.76	12.41	11.39	1.82	14.95	13.63	1.86	16.10	14.60	1.88
70	855	5.11	4.70	1.90	8.13	7.48	1.97	11.48	10.54	2.05	14.01	12.77	2.11	15.14	13.73	2.13
	975	5.22	4.80	1.90	8.27	7.61	1.97	11.65	10.69	2.03	14.20	12.95	2.08	15.35	13.92	2.10
80	855	4.12	3.79	2.11	7.14	6.57	2.18	10.55	9.68	2.27	13.09	11.94	2.33	14.24	12.91	2.36
	975	4.22	3.88	2.11	7.27	6.69	2.18	10.72	9.84	2.26	13.29	12.12	2.31	14.46	13.11	2.33

48XT042 Low Con't.

INDOOR AIR		OUTDOOR COIL ENTERING AIR TEMPERATURES deg F														
		30 (-1.1°C)			40 (4.4°C)			47 (8.3°C)			50 (10°C)			60 (15.5°C)		
EDB	CFM	Capacity MBtuh		Total System KW	Capacity MBtuh		Total System KW	Capacity MBtuh		Total System KW	Capacity MBtuh		Total System KW	Capacity MBtuh		Total System KW
		Total	Integ		Total	Integ		Total	Integ		Total	Integ		Total	Integ	
60	855	19.99	17.51	1.99	24.57	24.57	2.07	28.27	28.27	2.15	30.02	30.02	2.18	36.61	36.61	2.32
	975	20.23	17.72	1.95	24.89	24.89	2.02	28.72	28.72	2.08	30.53	30.53	2.11	37.32	37.32	2.23
70	855	19.18	16.81	2.21	23.66	23.66	2.31	27.19	27.19	2.38	28.83	28.83	2.42	35.19	35.19	2.56
	975	19.44	17.03	2.17	23.98	23.98	2.25	27.60	27.60	2.31	29.31	29.31	2.34	35.86	35.86	2.47
80	855	18.27	16.01	2.46	22.72	22.72	2.56	26.12	26.12	2.64	27.72	27.72	2.68	33.63	33.63	2.83
	975	18.54	16.24	2.41	23.04	23.04	2.50	26.53	26.53	2.57	28.17	28.17	2.60	34.44	34.44	2.73

LEGEND

Cap. — Heating Capacity (1000 Btuh) (Includes Indoor–Fan Motor Heat)

db — Dry Bulb

kW — Total Power Input (Includes Compressor Motor Power Input Outdoor–Fan Motor Input, and Indoor–Fan Motor Input)

rh — Relative Humidity

NOTES:

Integrated capacity is maximum (instantaneous) capacity less the effect of frost on the outdoor coil and the heat required to defrost it.

PERFORMANCE DATA-STANDARD ECM INDOOR MOTOR

Cooling Extended Performance Table

48XT048 High Cool

EVAPORATOR AIR		CONDENSER ENTERING AIR TEMPERATURES deg F																	
		75 (23.8°C)			85 (29.4°C)			95 (35°C)			105 (40.5°C)			115 (46.1°C)			125 (51.6°C)		
CFM	EWB	Capacity MBtuh		Total System KW	Capacity MBtuh		Total System KW	Capacity MBtuh		Total System KW	Capacity MBtuh		Total System KW	Capacity MBtuh		Total System KW	Capacity MBtuh		Total System KW
		Total	Sens		Total	Sens		Total	Sens		Total	Sens		Total	Sens		Total	Sens	
1400	57	44.39	44.39	3.40	42.70	42.70	3.71	40.87	40.87	4.05	38.88	38.88	4.43	36.67	36.67	4.84	34.16	34.16	5.30
	62	45.43	38.20	3.41	43.33	37.29	3.72	41.11	36.31	4.05	38.87	38.87	4.43	36.67	36.67	4.84	35.30	35.30	4.84
	63	46.29	30.85	3.42	44.11	29.95	3.73	41.79	29.00	4.06	39.28	28.00	4.43	36.54	26.91	4.84	33.51	25.73	5.29
	67	50.04	32.01	3.46	47.71	31.11	3.77	45.21	30.16	4.11	42.50	29.14	4.48	41.00	28.60	4.43	36.24	26.85	5.34
	72	55.24	25.88	3.53	52.68	24.98	3.84	49.93	24.04	4.18	46.96	23.04	4.55	45.43	22.53	4.52	40.04	20.75	5.41
1600	57	46.32	46.32	3.48	44.10	44.10	3.79	42.54	42.54	4.13	40.41	40.41	4.51	38.04	38.04	4.92	36.62	36.62	4.93
	62	46.57	41.09	3.48	44.43	44.43	3.79	42.54	42.54	4.13	41.40	41.40	4.51	38.04	38.04	4.92	36.61	36.61	4.93
	63	47.25	32.81	3.49	44.97	31.89	3.80	42.55	30.92	4.13	39.95	29.90	4.50	37.11	28.80	4.91	33.97	27.59	5.36
	67	51.07	34.10	3.53	48.62	33.18	3.84	46.00	32.20	4.18	43.19	31.17	4.55	40.12	30.06	4.96	38.36	29.43	4.97
	72	56.36	27.17	3.60	53.67	26.25	3.91	50.80	25.29	4.25	47.69	24.26	4.62	44.30	23.15	5.03	42.55	22.59	5.06

48XT048 Low Cool

EVAPORATOR AIR		CONDENSER ENTERING AIR TEMPERATURES deg F																	
		75 (23.8°C)			85 (29.4°C)			95 (35°C)			105 (40.5°C)			115 (46.1°C)			125 (51.6°C)		
CFM	EWB	Capacity MBtuh		Total System KW	Capacity MBtuh		Total System KW	Capacity MBtuh		Total System KW	Capacity MBtuh		Total System KW	Capacity MBtuh		Total System KW	Capacity MBtuh		Total System KW
		Total	Sens		Total	Sens		Total	Sens		Total	Sens		Total	Sens		Total	Sens	
965	57	31.49	31.49	2.22	30.30	30.30	2.49	29.02	29.02	2.78	27.63	27.63	3.12	26.10	26.10	3.51	24.40	24.40	3.96
	62	32.49	27.41	2.21	30.96	26.74	2.48	29.34	26.03	2.78	27.64	27.57	3.12	26.10	26.10	3.51	24.40	24.40	3.97
	63	33.19	22.28	2.21	31.62	21.62	2.48	29.95	20.92	2.78	28.14	20.18	3.12	26.19	19.39	3.52	24.04	18.53	3.97
	67	36.14	23.21	2.21	34.45	22.54	2.47	32.65	21.84	2.77	30.72	21.10	3.10	28.62	20.30	3.49	26.31	19.44	3.94
	72	40.19	19.02	2.21	38.34	18.36	2.46	36.37	17.67	2.75	34.25	16.93	3.08	31.95	16.14	3.46	29.40	15.29	3.90
1100	57	33.04	33.04	2.24	31.76	31.76	2.50	30.39	30.39	2.80	28.90	28.90	3.13	27.27	27.27	3.52	25.45	25.45	3.97
	62	33.42	29.57	2.23	31.85	28.86	2.50	30.39	30.39	2.80	28.90	28.90	3.13	27.27	27.27	3.52	25.45	25.45	3.97
	63	34.05	23.76	2.23	32.40	23.08	2.50	30.64	22.37	2.80	28.77	21.61	3.14	26.73	20.81	3.53	24.50	19.92	3.99
	67	37.06	24.78	2.23	35.29	24.10	2.49	33.40	23.38	2.78	31.39	22.62	3.12	29.20	21.81	3.51	26.79	20.93	3.95
	72	41.21	20.03	2.23	39.26	19.35	2.48	37.19	18.64	2.77	34.96	17.88	3.10	32.54	17.07	3.48	29.89	16.19	3.92

See page 29 for cooling notes.

PERFORMANCE DATA-STANDARD ECM INDOOR MOTOR

Heating Capacity

48XT048 High

INDOOR AIR		OUTDOOR COIL ENTERING AIR TEMPERATURES deg F														
		-10 (-23.3°C)			0 (-17.7°C)			10 (-12.2°C)			17 (-8.3°C)			20 (-6.6°C)		
EDB	CFM	Capacity MBtuh		Total System KW	Capacity MBtuh		Total System KW	Capacity MBtuh		Total System KW	Capacity MBtuh		Total System KW	Capacity MBtuh		Total System KW
		Total	Integ		Total	Integ		Total	Integ		Total	Integ		Total	Integ	
60	1400	13.33	12.27	2.19	17.37	15.98	2.40	21.89	20.10	2.63	25.47	23.23	2.80	27.14	24.61	2.88
	1600	13.53	12.45	2.21	17.59	16.18	2.42	22.14	20.32	2.64	25.78	23.51	2.80	27.47	24.92	2.88
70	1400	12.72	11.71	2.39	16.74	15.40	2.62	21.24	19.50	2.87	24.70	22.52	3.05	26.27	23.83	3.13
	1600	12.94	11.91	2.41	16.98	15.62	2.64	21.52	19.75	2.88	25.00	22.79	3.05	26.61	24.14	3.13
80	1400	11.86	10.91	2.58	15.90	14.63	2.84	20.40	18.73	3.11	23.85	21.74	3.31	25.40	23.04	3.40
	1600	12.09	11.12	2.61	16.17	14.88	2.86	20.70	19.00	3.12	24.18	22.05	3.31	25.75	23.36	3.40

48XT048 High Con't.

INDOOR AIR		OUTDOOR COIL ENTERING AIR TEMPERATURES deg F														
		30 (-1.1°C)			40 (4.4°C)			47 (8.3°C)			50 (10°C)			60 (15.5°C)		
EDB	CFM	Capacity MBtuh		Total System KW	Capacity MBtuh		Total System KW	Capacity MBtuh		Total System KW	Capacity MBtuh		Total System KW	Capacity MBtuh		Total System KW
		Total	Integ		Total	Integ		Total	Integ		Total	Integ		Total	Integ	
60	1400	33.39	29.26	3.16	40.69	40.69	3.49	46.59	46.59	3.77	49.36	49.36	3.91	58.12	58.12	4.29
	1600	33.83	29.64	3.15	41.16	41.16	3.48	46.62	46.62	3.72	49.42	49.42	3.83	58.16	58.16	4.22
70	1400	32.29	28.29	3.43	39.25	39.25	3.77	44.95	44.95	4.05	47.65	47.65	4.19	57.17	57.17	4.65
	1600	32.73	28.68	3.41	39.82	39.82	3.74	45.50	45.50	4.04	48.12	48.12	4.17	57.23	57.23	4.57
80	1400	31.08	27.23	3.71	37.81	37.81	4.07	43.28	43.28	4.37	45.87	45.87	4.51	55.65	55.65	5.07
	1600	31.53	27.62	3.69	38.39	38.39	4.04	43.94	43.94	4.33	46.54	46.54	4.48	55.70	55.70	4.92

LEGEND

Cap.— Heating Capacity (1000 Btuh) (Includes Indoor–Fan Motor Heat)

db — Dry Bulb

kW — Total Power Input (Includes Compressor Motor Power Input Outdoor–Fan Motor Input, and Indoor–Fan Motor Input)

rh — Relative Humidity

NOTES:

Integrated capacity is maximum (instantaneous) capacity less the effect of frost on the outdoor coil and the heat required to defrost it.

PERFORMANCE DATA-STANDARD ECM INDOOR MOTOR

Heating Capacity

48XT048 Low

INDOOR AIR		OUTDOOR COIL ENTERING AIR TEMPERATURES deg F														
		-10 (-23.3°C)			0 (-17.7°C)			10 (-12.2°C)			17 (-8.3°C)			20 (-6.6°C)		
EDB	CFM	Capacity MBtuh		Total System KW	Capacity MBtuh		Total System KW	Capacity MBtuh		Total System KW	Capacity MBtuh		Total System KW	Capacity MBtuh		Total System KW
		Total	Integ		Total	Integ		Total	Integ		Total	Integ		Total	Integ	
60	965	5.86	5.39	1.86	9.04	8.32	1.96	12.71	11.67	2.05	15.64	14.26	2.12	17.00	15.42	2.15
	1100	5.95	5.47	1.86	9.16	8.42	1.95	12.85	11.79	2.03	15.80	14.41	2.09	17.18	15.58	2.12
70	965	5.21	4.80	2.08	8.43	7.76	2.19	12.11	11.12	2.30	15.01	13.69	2.37	16.35	14.83	2.41
	1100	5.32	4.89	2.08	8.56	7.88	2.18	12.27	11.27	2.28	15.20	13.86	2.34	16.55	15.01	2.37
80	965	4.44	4.09	2.32	7.66	7.05	2.43	11.36	10.42	2.55	14.25	12.99	2.64	15.58	14.13	2.68
	1100	4.55	4.18	2.33	7.79	7.17	2.43	11.53	10.58	2.54	14.45	13.17	2.61	15.80	14.33	2.64

48XT048 Low Con't.

INDOOR AIR		OUTDOOR COIL ENTERING AIR TEMPERATURES deg F														
		30 (-1.1°C)			40 (4.4°C)			47 (8.3°C)			50 (10°C)			60 (15.5°C)		
EDB	CFM	Capacity MBtuh		Total System KW	Capacity MBtuh		Total System KW	Capacity MBtuh		Total System KW	Capacity MBtuh		Total System KW	Capacity MBtuh		Total System KW
		Total	Integ		Total	Integ		Total	Integ		Total	Integ		Total	Integ	
60	965	21.99	19.27	2.26	27.98	27.98	2.40	32.83	32.83	2.51	35.07	35.07	2.56	43.68	43.68	2.76
	1100	22.24	19.48	2.22	28.40	28.40	2.33	33.33	33.33	2.43	35.65	35.65	2.47	44.63	44.63	2.66
70	965	21.27	18.64	2.53	26.97	26.97	2.66	31.72	31.72	2.78	33.87	33.87	2.84	41.97	41.97	3.05
	1100	21.53	18.87	2.48	27.36	27.36	2.59	32.20	32.20	2.70	34.41	34.41	2.74	42.84	42.84	2.93
80	965	20.45	17.92	2.81	26.04	26.04	2.96	30.48	30.48	3.08	32.72	32.72	3.15	40.41	40.41	3.37
	1100	20.73	18.16	2.76	26.39	26.39	2.89	30.97	30.97	2.99	33.22	33.22	3.04	41.15	41.15	3.24

LEGEND

Cap. — Heating Capacity (1000 Btuh) (Includes Indoor–Fan Motor Heat)
db — Dry Bulb
kW — Total Power Input (Includes Compressor Motor Power Input Outdoor–Fan Motor Input, and Indoor–Fan Motor Input)
rh — Relative Humidity

NOTES:

Integrated capacity is maximum (instantaneous) capacity less the effect of frost on the outdoor coil and the heat required to defrost it.

PERFORMANCE DATA-STANDARD ECM INDOOR MOTOR

Cooling Extended Performance Table

48XT060 High Cool

EVAPORATOR AIR		CONDENSER ENTERING AIR TEMPERATURES deg F																	
		75 (23.8°C)			85 (29.4°C)			95 (35°C)			105 (40.5°C)			115 (46.1°C)			125 (51.6°C)		
CFM	EWB	Capacity MBtuh		Total System KW	Capacity MBtuh		Total System KW	Capacity MBtuh		Total System KW	Capacity MBtuh		Total System KW	Capacity MBtuh		Total System KW	Capacity MBtuh		Total System KW
		Total	Sens		Total	Sens		Total	Sens		Total	Sens		Total	Sens		Total	Sens	
2000	57	58.24	58.24	4.41	55.10	55.10	4.84	54.80	54.80	4.69	52.40	52.40	5.23	46.70	46.70	6.40	42.90	42.90	7.02
	62	58.46	54.46	4.42	55.79	55.79	4.84	55.36	55.36	4.69	52.73	52.73	5.23	46.94	46.94	6.40	43.20	43.20	7.02
	63	59.23	43.33	4.42	56.27	42.07	4.85	55.68	41.83	4.69	52.48	40.49	5.22	45.80	37.74	6.37	41.56	36.02	6.97
	67	63.56	44.86	4.50	60.35	43.59	4.92	56.88	42.24	5.38	56.62	42.14	5.33	48.97	39.21	6.44	44.37	37.49	7.05
	72	69.55	35.33	4.59	66.01	34.07	5.02	62.20	32.73	5.48	58.07	31.30	5.99	53.51	29.74	6.54	48.46	28.03	7.15
1750	57	56.01	56.01	4.29	53.76	53.76	4.72	51.30	51.30	5.19	50.80	50.80	5.08	45.20	45.20	6.27	41.70	41.70	6.89
	62	57.19	50.62	4.31	54.45	49.37	4.73	51.51	48.01	5.19	50.93	47.74	5.08	45.50	45.50	6.27	41.99	41.99	6.89
	63	58.18	40.75	4.32	55.35	39.51	4.74	52.28	38.20	5.20	51.66	37.95	5.10	45.27	35.27	6.26	41.16	33.59	6.87
	67	62.48	42.11	4.39	59.41	40.86	4.81	57.00	39.90	5.18	55.71	39.39	5.21	48.47	36.58	6.34	44.00	34.88	6.94
	72	68.41	33.69	4.48	65.01	32.46	4.91	61.35	31.14	5.37	57.37	29.72	5.88	52.97	28.19	6.44	48.09	26.53	7.04

48XT060 Low Cool

EVAPORATOR AIR		CONDENSER ENTERING AIR TEMPERATURES deg F																	
		75 (23.8°C)			85 (29.4°C)			95 (35°C)			105 (40.5°C)			115 (46.1°C)			125 (51.6°C)		
CFM	EWB	Capacity MBtuh		Total System KW	Capacity MBtuh		Total System KW	Capacity MBtuh		Total System KW	Capacity MBtuh		Total System KW	Capacity MBtuh		Total System KW	Capacity MBtuh		Total System KW
		Total	Sens		Total	Sens		Total	Sens		Total	Sens		Total	Sens		Total	Sens	
1200	57	39.88	39.88	2.70	38.34	38.34	3.04	36.64	36.64	3.43	34.74	34.74	3.87	31.90	31.90	4.37	29.70	29.70	4.94
	62	40.94	35.96	2.69	39.01	35.09	3.04	36.90	34.14	3.43	34.90	34.90	3.87	32.60	32.60	4.37	30.16	30.16	4.94
	63	41.76	29.14	2.69	39.78	28.27	3.04	37.61	27.34	3.42	35.23	26.33	3.87	32.61	25.22	4.37	29.69	24.04	4.96
	67	45.04	30.17	2.68	42.87	29.29	3.02	40.50	28.35	3.40	37.91	27.31	3.84	35.04	26.21	4.33	31.84	25.00	4.90
	72	49.59	24.40	2.68	47.18	23.52	3.01	44.52	22.56	3.38	41.68	21.55	3.80	38.47	20.43	4.28	34.93	19.21	4.84
1370	57	41.69	41.69	2.72	40.00	40.00	3.07	37.90	37.90	3.45	35.45	35.45	3.89	33.62	33.62	4.38	30.90	30.90	4.95
	62	41.98	38.83	2.72	40.02	40.02	3.07	38.18	38.18	3.45	36.13	36.13	3.89	33.82	33.82	4.38	31.19	31.19	4.95
	63	42.72	31.09	2.72	40.63	30.20	3.07	38.35	29.24	3.45	35.86	28.21	3.89	33.13	27.09	4.40	30.10	25.87	4.98
	67	46.03	32.23	2.72	43.75	31.34	3.05	41.27	30.36	3.43	38.55	29.32	3.86	35.56	28.18	4.36	32.25	26.93	4.92
	72	50.62	25.68	2.71	48.09	24.78	3.04	45.37	23.83	3.41	42.32	22.77	3.83	39.01	21.64	4.31	35.34	20.40	4.86

See page 29 for cooling notes.

PERFORMANCE DATA-STANDARD ECM INDOOR MOTOR

Heating Capacity

48XT060 High

INDOOR AIR		OUTDOOR COIL ENTERING AIR TEMPERATURES deg F														
		-10 (-23.3°C)			0 (-17.7°C)			10 (-12.2°C)			17 (-8.3°C)			20 (-6.6°C)		
EDB	CFM	Capacity MBtuh		Total System KW	Capacity MBtuh		Total System KW	Capacity MBtuh		Total System KW	Capacity MBtuh		Total System KW	Capacity MBtuh		Total System KW
		Total	Integ		Total	Integ		Total	Integ		Total	Integ		Total	Integ	
60	1750	17.01	15.65	3.08	21.62	19.89	3.31	27.05	24.83	3.55	31.57	28.78	3.73	33.69	30.55	3.82
	2000	17.24	15.86	3.12	21.87	20.13	3.34	27.37	25.12	3.57	31.93	29.11	3.74	34.08	30.90	3.83
70	1750	16.62	15.29	3.40	21.22	19.53	3.65	26.51	24.33	3.91	30.80	28.08	4.10	32.92	29.86	4.19
	2000	16.88	15.53	3.44	21.50	19.78	3.69	26.82	24.62	3.93	31.18	28.43	4.11	33.32	30.22	4.20
80	1750	16.04	14.75	3.72	20.64	18.99	4.01	25.93	23.80	4.29	30.06	27.41	4.49	31.99	29.01	4.59
	2000	16.31	15.01	3.77	20.95	19.27	4.04	26.26	24.11	4.31	30.42	27.74	4.50	32.41	29.39	4.59

48XT060 High Con't.

INDOOR AIR		OUTDOOR COIL ENTERING AIR TEMPERATURES deg F														
		30 (-1.1°C)			40 (4.4°C)			47 (8.3°C)			50 (10°C)			60 (15.5°C)		
EDB	CFM	Capacity MBtuh		Total System KW	Capacity MBtuh		Total System KW	Capacity MBtuh		Total System KW	Capacity MBtuh		Total System KW	Capacity MBtuh		Total System KW
		Total	Integ		Total	Integ		Total	Integ		Total	Integ		Total	Integ	
60	1750	41.80	36.62	4.14	50.24	50.24	4.44	56.80	56.80	4.63	59.20	59.20	4.67	64.80	64.80	4.75
	2000	41.90	36.71	4.12	50.80	50.80	4.36	56.90	56.90	4.40	59.50	59.50	4.42	65.10	65.10	4.50
70	1750	40.71	35.67	4.52	49.81	49.81	4.91	56.00	56.00	5.13	58.75	58.75	5.26	63.56	63.56	5.44
	2000	41.19	36.09	4.53	50.10	50.10	4.84	56.40	56.40	4.99	59.10	59.10	5.02	64.30	64.30	5.11
80	1750	39.61	34.70	4.93	48.50	48.50	5.35	55.46	55.46	5.63	58.45	58.45	5.74	62.90	62.90	6.23
	2000	40.12	35.15	4.92	48.79	48.79	5.29	55.90	55.90	5.56	58.90	58.90	5.66	63.50	63.50	5.78

LEGEND

Cap.— Heating Capacity (1000 Btuh) (Includes Indoor–Fan Motor Heat)

db — Dry Bulb

kW — Total Power Input (Includes Compressor Motor Power Input Outdoor–Fan Motor Input, and Indoor–Fan Motor Input)

rh — Relative Humidity

NOTES:

Integrated capacity is maximum (instantaneous) capacity less the effect of frost on the outdoor coil and the heat required to defrost it.

PERFORMANCE DATA-STANDARD ECM INDOOR MOTOR

Heating Capacity

48XT060 Low

INDOOR AIR		OUTDOOR COIL ENTERING AIR TEMPERATURES deg F														
		-10 (-23.3°C)			0 (-17.7°C)			10 (-12.2°C)			17 (-8.3°C)			20 (-6.6°C)		
EDB	CFM	Capacity MBtuh		Total System KW	Capacity MBtuh		Total System KW	Capacity MBtuh		Total System KW	Capacity MBtuh		Total System KW	Capacity MBtuh		Total System KW
		Total	Integ		Total	Integ		Total	Integ		Total	Integ		Total	Integ	
60	1200	9.91	9.11	2.55	13.43	12.36	2.64	17.58	16.14	2.72	20.92	19.07	2.78	22.45	20.36	2.81
	1370	10.02	9.22	2.55	13.56	12.48	2.62	17.73	16.28	2.69	21.10	19.23	2.74	22.64	20.54	2.76
70	1200	9.46	8.70	2.89	12.98	11.94	2.99	17.10	15.69	3.08	20.40	18.60	3.15	21.92	19.88	3.18
	1370	9.59	8.82	2.89	13.13	12.08	2.97	17.29	15.87	3.05	20.61	18.79	3.10	22.14	20.08	3.13
80	1200	8.82	8.11	3.25	12.35	11.36	3.36	16.47	15.12	3.46	19.75	18.01	3.54	21.27	19.29	3.57
	1370	8.96	8.24	3.25	12.52	11.52	3.34	16.67	15.30	3.43	19.98	18.22	3.49	21.51	19.51	3.52

48XT060 Low Con't.

INDOOR AIR		OUTDOOR COIL ENTERING AIR TEMPERATURES deg F														
		30 (-1.1°C)			40 (4.4°C)			47 (8.3°C)			50 (10°C)			60 (15.5°C)		
EDB	CFM	Capacity MBtuh		Total System KW	Capacity MBtuh		Total System KW	Capacity MBtuh		Total System KW	Capacity MBtuh		Total System KW	Capacity MBtuh		Total System KW
		Total	Integ		Total	Integ		Total	Integ		Total	Integ		Total	Integ	
60	1200	28.14	24.66	2.91	35.04	35.04	3.03	40.62	40.62	3.13	43.31	43.31	3.18	53.58	53.58	3.38
	1370	28.41	24.90	2.84	35.43	35.43	2.94	41.18	41.18	3.03	43.95	43.95	3.07	54.06	54.06	3.19
70	1200	27.54	24.13	3.28	34.06	34.06	3.40	39.50	39.50	3.51	42.04	42.04	3.56	51.83	51.83	3.77
	1370	27.81	24.37	3.21	34.46	34.46	3.31	40.01	40.01	3.40	42.63	42.63	3.44	52.74	52.74	3.62
80	1200	26.82	23.50	3.69	33.24	33.24	3.82	38.34	38.34	3.92	40.91	40.91	3.99	50.19	50.19	4.21
	1370	27.11	23.76	3.61	33.60	33.60	3.71	38.85	38.85	3.80	41.41	41.41	3.85	51.04	51.04	4.04

LEGEND

Cap. — Heating Capacity (1000 Btuh) (Includes Indoor–Fan Motor Heat)

db — Dry Bulb

kW — Total Power Input (Includes Compressor Motor Power Input Outdoor–Fan Motor Input, and Indoor–Fan Motor Input)

rh — Relative Humidity

NOTES:

Integrated capacity is maximum (instantaneous) capacity less the effect of frost on the outdoor coil and the heat required to defrost it.

PERFORMANCE DATA (CONT)

Multiplication Factors

HEATER kW RATING	VOLTAGE DISTRIBUTION V/3/60	MULTIPLICATION FACTOR
240	200	.69
	208	.75
	230	.92
	240	1.00

Example: 15.0 kW (at 240v) heater on 208v
= 15.0 (.75 mult factor)
= 11.25 capacity at 208v

LEGEND
BF — Bypass Factor
edb — Entering Dry–Bulb
Ewb — Entering Wet–Bulb
kW — Total Unit Power Input
ldb — Leaving Dry–Bulb
lwb — Leaving Wet–Bulb
SHC — Sensible Heat Capacity (1000 Btuh)
TC — Total Capacity (1000 Btuh) (net)

*At 75°F (23.8°C) entering dry bulb (Tennessee Valley Authority [TVA] rating conditions); all other at 80°F (26.6°C) entering dry bulb.

COOLING NOTES:
1. Ratings are net; they account for the effects of the evaporator–fan motor power and heat.
2. Direct interpolation is permissible. Do not extrapolate.
3. The following formulas may be used:

$$^{t}ldb = {}^{t}edb - \frac{\text{Sensible capacity (Btuh)}}{1.10 \times \text{cfm}}$$

^{t}lwb = Wet–bulb temperature corresponding to enthalpy air leaving evaporator coil (^{h}lwb)

$$^{h}lwb = {}^{h}ewb - \frac{\text{total capacity (Btuh)}}{4.5 \times \text{cfm}}$$

Where: ^{h}ewb = Enthalpy of air entering evaporator coil

4. The SHC is based on 80° F (26.6°C) edb temperature of air entering evaporator coil. Below 80° F (26.6°C) edb, subtract (corr factor x cfm) from SHC.

Above 80° F (26.6°C) edb, add (corr factor x cfm) to SHC.
Correction Factor = 1.10 x (1 + BF) x (edb + 80).

5. Integrated capacity is maximum (instantaneous) capacity less the effect of frost on the outdoor coil and the heat required to defrost it.

HIGH ALTITUDE COMPENSATION

Nameplate Input, High Stage (Btu/hr)	Rated Heating Input (Btu/hr), LP Gas at Installation Altitude Above Sea Level, U.S.A.*									
	0 to 2000 ft		2001 to 3000 ft*		3001 to 4000 ft		4001 to 5000 ft		5001 to 6000 ft	
	High Stage	Low Stage	High Stage	Low Stage	High Stage	Low Stage	High Stage	Low Stage	High Stage	Low Stage
40000	38000	26000	31700	23400	31700	22300	31700	21300	31200	20300
60000	57000	39000	47500	35100	47500	33500	47500	32000	46800	30400
90000	79000	58500	68900	52700	68900	50300	68600	48000	68600	45600
115000	103000	75000	100400	67500	98900	64500	83000	61500	83000	58500
130000	116000	84500	115500	76100	111800	72700	101300	69300	100400	65900

* For Canadian Installations from 2000 to 4500 ft, use U.S.A. column 2001 to 3000 ft.

Nameplate Input, High Stage (Btu/hr)	Rated Heating Input (Btu/hr), Natural Gas at Installation Altitude Above Sea Level, U.S.A.*									
	0 to 2000 ft		2001 to 3000 ft*		3001 to 4000 ft		4001 to 5000 ft		5001 to 6000 ft	
	High Stage	Low Stage	High Stage	Low Stage	High Stage	Low Stage	High Stage	Low Stage	High Stage	Low Stage
40000	40000	26000	36000	23400	34400	22300	32800	21300	31200	20300
60000	60000	39000	54000	35100	51600	33500	49200	32000	46800	30400
90000	90000	58500	81000	52700	77400	50300	73800	48000	70200	45600
115000	115000	75000	103500	67500	98900	64500	94300	61500	89700	58500
130000	130000	84500	117000	76100	111800	72700	106600	69300	101400	65900

* For Canadian Installations from 2000 to 4500 ft, use U.S.A. column 2001 to 3000 ft.

WET COIL AIR DELIVERY - LOW STAGE

208/230 VOLT											
UNIT SIZE	SYSTEM SETTING	EXTERNAL STATIC PRESSURE (in. wc)									
		0.1	0.2	0.3	0.4	0.5	0.6	0.7	0.8	0.9	1.0
024	COMFORT (Default)	Variable based on Comfort Settings									
	EFFICIENCY	525	525	525	525	525	525	525	525	525	525
	MAX	600	600	600	600	600	600	600	600	600	600
030	COMFORT (Default)	Variable based on Comfort Settings									
	EFFICIENCY	613	613	613	613	613	613	613	613	613	613
	MAX	700	700	700	700	700	700	700	700	700	700
036	COMFORT (Default)	Variable based on Comfort Settings									
	EFFICIENCY	743	743	743	743	743	743	743	743	743	743
	MAX	850	850	850	850	850	850	850	850	850	850
042	COMFORT (Default)	Variable based on Comfort Settings									
	EFFICIENCY	853	853	853	853	853	853	853	853	853	853
	MAX	975	975	975	975	975	975	975	975	975	975
048	COMFORT (Default)	Variable based on Comfort Settings									
	EFFICIENCY	963	963	963	963	963	963	963	963	963	963
	MAX	1100	1100	1100	1100	1100	1100	1100	1100	1100	1100
060	COMFORT (Default)	Variable based on Comfort Settings									
	EFFICIENCY	1200	1200	1200	1200	1200	1200	1200	1200	1200	1200
	MAX	1372	1372	1372	1372	1372	1372	1372	1372	1372	1372

WET COIL AIR DELIVERY - HIGH STAGE

208/230 VOLT											
UNIT SIZE	SYSTEM SETTING	EXTERNAL STATIC PRESSURE (in. wc)									
		0.1	0.2	0.3	0.4	0.5	0.6	0.7	0.8	0.9	1.0
024	COMFORT (Default)	Variable based on Comfort Settings									
	EFFICIENCY	700	700	700	700	700	700	700	700	700	700
	MAX	800	800	800	800	800	800	800	800	800	800
030	COMFORT (Default)	Variable based on Comfort Settings									
	EFFICIENCY	875	875	875	875	875	875	875	875	875	875
	MAX	1000	1000	1000	1000	1000	1000	1000	1000	1000	1000
036	COMFORT (Default)	Variable based on Comfort Settings									
	EFFICIENCY	1050	1050	1050	1050	1050	1050	1050	1050	1050	1050
	MAX	1200	1200	1200	1200	1200	1200	1200	1200	1200	1200
042	COMFORT (Default)	Variable based on Comfort Settings									
	EFFICIENCY	1225	1225	1225	1225	1225	1225	1225	1225	1225	1225
	MAX	1400	1400	1400	1400	1400	1400	1400	1400	1400	1400
048	COMFORT (Default)	Variable based on Comfort Settings									
	EFFICIENCY	1400	1400	1400	1400	1400	1400	1400	1400	1400	1400
	MAX	1600	1600	1600	1600	1600	1600	1600	1600	1600	1600
060	COMFORT (Default)	Variable based on Comfort Settings									
	EFFICIENCY	1750	1750	1750	1750	1750	1750	1750	1750	1750	1750
	MAX	2000	2000	2000	2000	2000	2000	2000	2000	2000	2000

Air delivery values are based on operating voltage of 230v, and wet coil. Filter and electric heater will not change air delivery values.

NOTES:

1. See User Interface instructions for more information on Max, Efficiency, and Comfort Settings
2. Efficiency Setting operates at 350 cfm/ton (nominal) and Max Setting operates at 400 cfm/ton (nominal)

TYPICAL PIPING AND WIRING

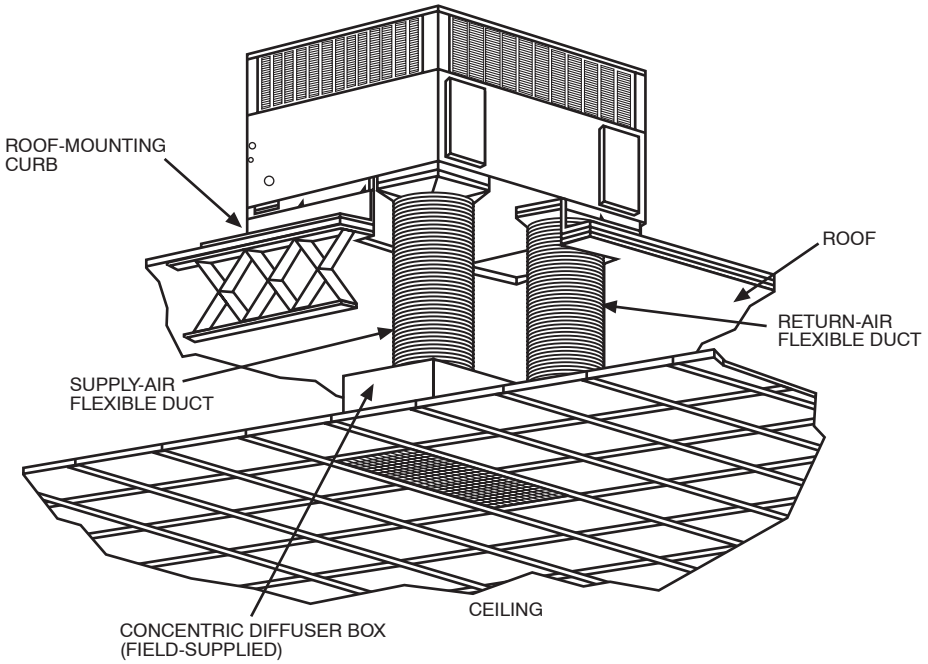

C00023

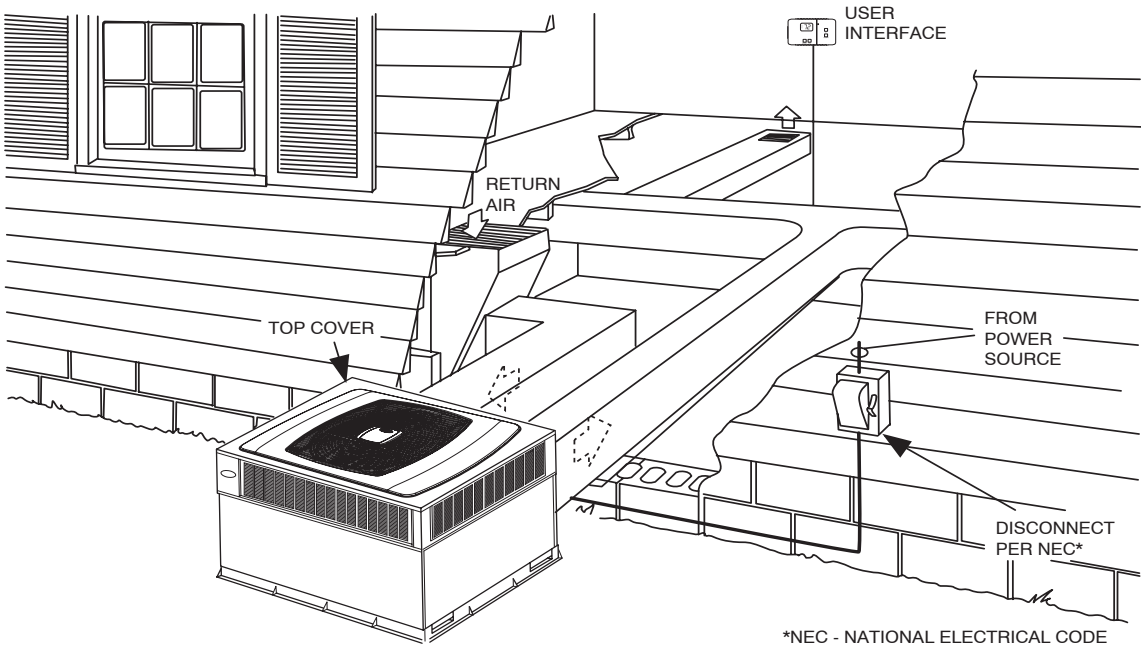

A06279

APPLICATION DATA

Condensate trap — A 2-in. condensate trap must be field supplied.

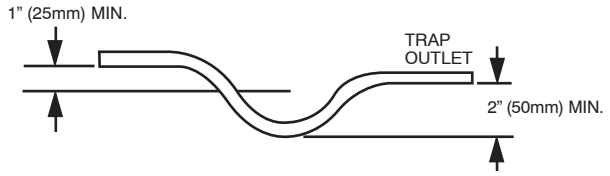

Ductwork — Secure downflow discharge ductwork to roof curb. For horizontal discharge applications, attach ductwork to unit with flanges.

To convert a unit to downflow discharge — Units are equipped with factory-installed inserts in the downflow openings. Remove the inserts similar to removing an electrical knock-out. Leave on duct covers to seal the horizontal discharge openings in the unit. Units installed in horizontal discharge orientation do not require duct covers.

Minimum cooling ambient operating temperature — All standard units have a minimum ambient operating temperature of 55°F (12.7°C). With low-ambient cooling enabled at the UI, units can operate at temperatures down to 0°F (-17.7°C).

Maximum operating outdoor air temperature — Maximum outdoor operating air temperature for cooling is 125°F (51.6°C).

48XT

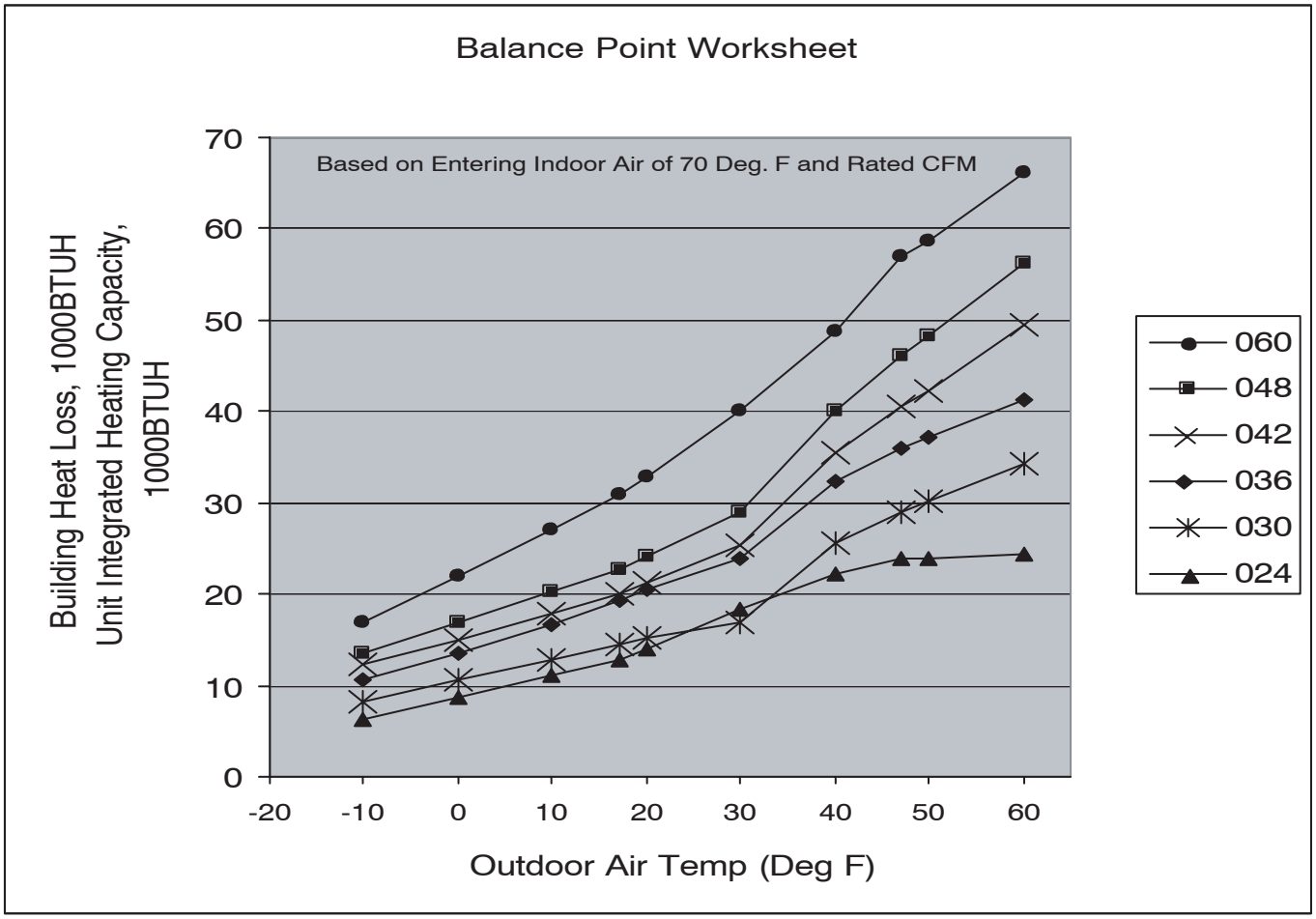

C03008

ELECTRICAL DATA

UNIT SIZE	V-PH-HZ	VOLTAGE RANGE		COMPRESSOR		OUTDOOR FAN MOTOR	INDOOR FAN MOTOR	POWER SUPPLY	
		Min	Max	RLA	LRA	FLA	FLA	MCA	MOCP
024	208/230–1–60	187	253	15.3	52.0	0.9	4.3	24.3/24.3	35/35
030	208/230–1–60	187	253	16.8	70.0	0.9	4.3	26.2/26.2	40/40
036	208/230–1–60	187	253	16.7	82.0	0.9	6.8	28.6/28.6	45/45
042	208/230–1–60	187	253	21.8	96.0	0.9	6.8	34.9/34.9	50/50
048	208/230–1–60	187	253	27.8	96.0	1.5	6.8	43.1/43.1	60/60
060	208/230–1–60	187	253	27.3	118.0	1.9	9.1	45.2/45.2	60/60

LEGEND

FLA — Full Load Amps
LRA — Locked Rotor Amps
MCA -- Minimum Circuit Amps
MOCP — Maximum Overcurrent Protection
RLA — Rated Load Amps

NOTES:

1. In compliance with NEC (National Electrical Code) requirements for multimotor and combination load equipment (refer to NEC Articles 430 and 440), the overcurrent protective device for the unit shall be Power Supply fuse. The CGA (Canadian Gas Association) units may be fuse or circuit breaker.
2. Minimum wire size is based on 60 C copper wire. If other than 60 C wire is used, or if length exceeds wire length in table, determine size from NEC.
3. Unbalanced 3-Phase Supply Voltage
   Never operate a motor where a phase imbalance in supply voltage is greater than 2%. Use the following formula to determine the percentage of voltage imbalance

   % Voltage imbalance

   $$= 100 \times \frac{\text{max voltage deviation from average voltage}}{\text{average voltage}}$$

* Heater capacity (kW) based on heater voltage of 208v & 240v. If power distibution voltage to unit varies from rated heater voltage, heater kW will vary accordingly.

EXAMPLE: Supply voltage is 230-3-60.

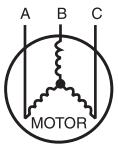

AB = 228 v
BC = 231 v
AC = 227 v

$$\text{Average Voltage} = \frac{228 + 231 + 227}{3} = \frac{686}{3} = 229$$

Determine maximum deviation from average voltage.
(AB) 229 - 228 = 1 v
(BC) 231 - 229 = 2 v
(AC) 229 - 227 = 2 v

Maximum deviation is 2 v.

Determine percent of voltage imbalance

$$\% \text{ Voltage Imbalance} = 100 \times \frac{2}{229} = 0.8\%$$

This amount of phase imbalance is satisfactory as it is below the maximum allowable 2%.

IMPORTANT: If the supply voltage phase imbalance is more than 2%, contact your local electric utility company immediately.

48XT

TYPICAL WIRING SCHEMATIC — 230-1-60

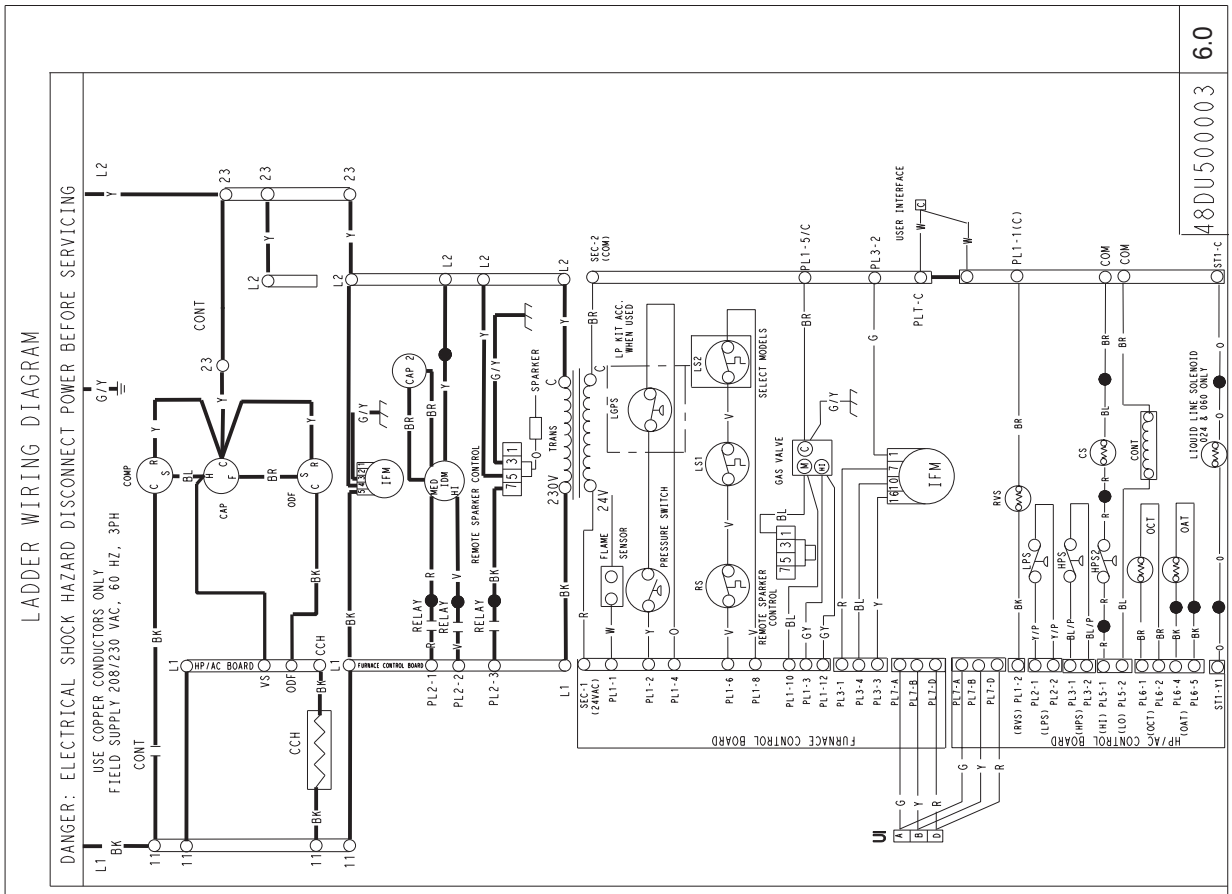

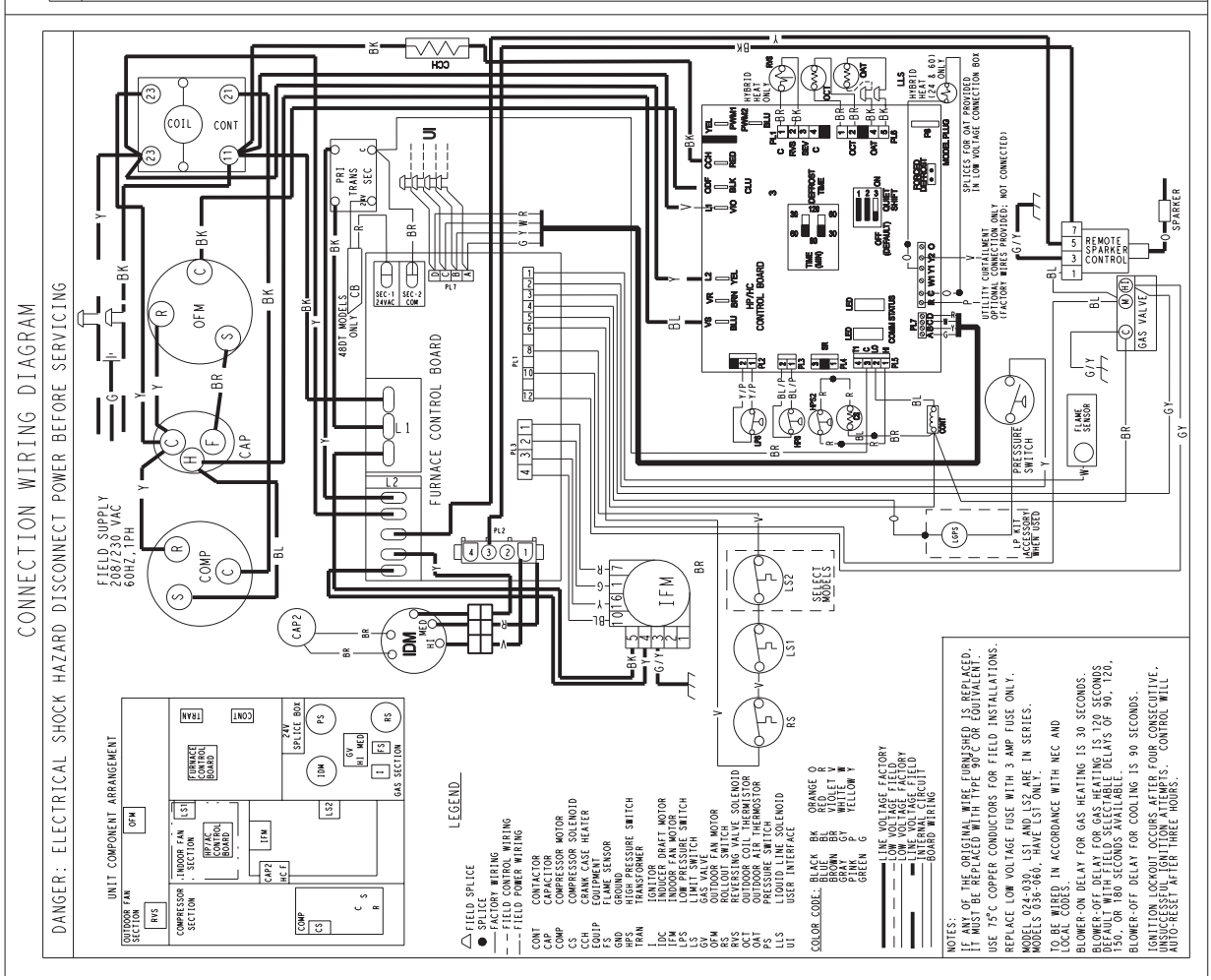

A06310

48XT

Sequence of Operation

The 48XT Hybrid Heat unit is designed for installation with a communicating UI. This unit will not respond to commands provided by a common thermostat except under certain emergency situations described in Step 1—Start-Up and Troubleshooting.

The UI uses temperature, humidity and other data supplied from indoor and outdoor system components to control heating or cooling system for optimum comfort. The unit will be commanded by UI to supply airflow. The unit will operate the indoor blower at requested airflow for most modes.

HYBRID HEAT SEQUENCE OF OPERATION

The Hybrid Heat sequence of operation, from satisfied to full heating, is as follows:

The system will attempt to satisfy the call for heat with the first stage heat pump. There is a ten-minute staging timer before switching to the second stage heat pump.

Second stage heat pump will run until call for heat is satisfied or for fifteen minutes. If after 15 minutes the call for heat still exists, the unit will stage to first stage gas.

For first stage gas the heat pump will be off unless the unit is in defrost. There is a ten-minute staging timer on first stage gas. If call for heat still exists after 10 minutes, the system will stage to second stage gas and run until the call for heat is satisfied.

NOTE: Heat stages are not shortened due to a 5 degree or higher demand. All stages are utilized for the full allotted time described above. If the UI determines it is making sufficient progress toward set point, it may not stage up after the staging timer has elapsed. Pressing the FAN and TEMPERATURE UP buttons simultaneously defeats cycle timers. See UI intallation instructions for more detail.

HEAT PUMP SEQUENCE OF OPERATION

COOLING AND HEATING OPERATION

With a call for first stage cooling, the outdoor fan, reversing valve, and low stage compressor are energized. If low-stage cannot satisfy cooling demand, high-stage cooling is energized by the UI. After second stage is satisfied, the unit returns to low-stage operation until first stage is satisfied or until second stage is required again. When both first stage and second stage cooling are satisfied, the compressor will shut off. The reversing valve will remain energized until the control board power is removed or a call for heating in initiated. With a call for heating, the outdoor fan and compressor are energized. The compressor will operate in high or low stage operation, as needed to meet the heating demand. When the heating demand is satisfied, the compressor and fan will shut off. The reversing valve is de-energized in the heating mode.

NOTE: When two-stage unit is operating at low-stage, system vapor (suction) pressure will be higher than a standard single-stage system or high-stage operation.

NOTE: Outdoor fan motor will continue to operate for one minute after compressor shuts off, when outdoor ambient is greater than or equal to 100°F.

GAS HEAT MODE AND ADJUSTMENTS

When the UI calls for gas heat, the Infinity furnace board performs a self-check, verifies the pressure switch is open, and starts the inducer on high speed.

1. Inducer Pre-purge Period: When the inducer motor comes up on high speed, the pressure switch closes, and the Infinity ignition control on the furnace board begins a 15 second pre-purge period. If the pressure switch fails to remain closed, the inducer will remain running. After the pressure switch re-closes, the Infinity ignition control will begin a 15 second pre-purge period.
2. Trial-For-Ignition Sequence: The spark igniter will spark for 3 seconds. The main gas valve relay contact closes to energize the gas valve on low stage. After 5 seconds, the igniter is de-energized and a 2-second flame-proving period begins. NOTE: The unit always lights on high speed inducer and low stage gas valve operation.
3. Flame-Proving: When the burner flame is proved at the flame-proving sensor, the furnace control determines what heating stage to run based on feedback from the UI. If the UI is asking for low stage gas heat, the ignition control will change the inducer speed to low speed and keep the gas valve energized on low stage. If the UI is asking for high stage gas heat, the ignition control will maintain running the inducer on high speed and energize the gas valve's high stage relay to increase gas flow.

If the burner flame is not proved within 2 seconds, the control will close the gas valve and repeat the ignition sequence up to 3 more Trials-For-Ignition before going to Ignition-Lockout. Lockout will reset automatically after 3 hours, by momentarily interrupting 230 VAC power, or by interrupting 24 VAC power at SEC1 or SEC2 to the furnace board.

If flame is proved when there should be no flame present, control will lock out of Gas-Heating mode and operate the inducer motor until flame is no longer proved.

GUIDE SPECIFICATIONS

SINGLE-PACKAGED HEAT PUMP UNITS
CONSTANT VOLUME APPLICATION

HVAC GUIDE SPECIFICATIONS

SIZE RANGE: 2 TO 5 TONS, NOMINAL (COOLING)
MODEL NUMBER: 48XT

PART I - GENERAL

SYSTEM DESCRIPTION

Outdoor rooftop or ground mounted heat pump unit utilizing a hermetic, 2-stage scroll compressor for heating and cooling duty and optional electric heating. Unit shall discharge supply air vertically or horizontally as shown on contract drawings. Outdoor fan/coil section shall have a draw-thru design with vertical discharge for minimum sound levels.

QUALITY ASSURANCE

A. Unit shall be rated in accordance with ARI Standards 210/240 and 270.
B. Unit shall be designed in accordance with UL Standard 1995.
C. Unit shall be manufactured in a facility registered to ISO 9001 manufacturing quality standard
D. Unit shall be UL listed and c-UL certified as a total package for safety requirements.
E. Roof curb shall be designed to conform to NRCA Standards.
F. Insulation and adhesives shall meet NFPA 90A requirements for flame spread and smoke generation.
G. Cabinet insulation shall meet ASHRAE Standard 62P.

DELIVERY, STORAGE, AND HANDLING

Unit shall be stored and handled per manufacturer's recommendations.

PART 2- PRODUCTS

EQUIPMENT

A. General:
Factory-assembled, single-piece, heat pump. Contained within the unit enclosure shall be all factory wiring, piping, controls, refrigerant charge (R-410A), and special features required prior to field start-up.

B. Unit Cabinet:
1. Unit cabinet shall be constructed of phosphated, zinc-coated, prepainted steel capable of withstanding 500 hrs of salt spray.
2. Normal service shall be through a single removable cabinet panel.
3. The unit shall be constructed on a rust proof unit base that has an externally trapped, integrated sloped drain pan.
4. Indoor fan compartment top surface shall be insulated with a minimum 1/2-in. thick, flexible fiberglass insulation, coated on the air side and retained by adhesive and mechanical means. The indoor wall sections will be insulated with a foil-faced insulation capable of being wiped clean. Aluminum foil-faced fiberglass insulation shall be used in the entire indoor air cavity section.
5. Unit shall have a field-supplied condensate trap.

C. Fans:
1. The indoor fan shall be variable-speed motor and control, as shown on equipment drawings.
2. Fan wheel shall be made from steel, be double-inlet type. It shall have forward-curved blades with a corrosion-resistant finish and shall be dynamically balanced.
3. Outdoor fan shall be of the direct-driven propeller type with aluminum blades, riveted to corrosion-resistant steel spiders. It shall be dynamically balanced, and discharge air vertically.

D. Compressor:
1. Fully hermetic, 2-stage scroll compressors with factory-installed vibration isolation.
2. Scroll compressors shall be standard on all units.
3. Compressor Protection:
Defrost control shall protect compressor by preventing "short cycling."

E. Coils:
1. Indoor and outdoor coils shall have aluminum plate fins mechanically bonded to seamless copper tubes with all joints brazed.
2. Tube sheet openings shall be bellied to prevent tube wear.

F. Refrigerant Metering Device:
Refrigerant metering device shall be of the single body, fixed orifice feed type (outdoor) and TXV (indoor).

G. Filters:
Filter section shall consist of field-installed, throw-away, 1-in. thick fiberglass filters of commercially available sizes.

H. Heating Section:
1. Induced-draft combustion type with energy saving direct spark ignition system and redundant main gas valve.
2. Pressure switch ensures adequate airflow for combustion from induced draft motor.
3. The heat exchangers shall be constructed of 409 stainless steel for corrosion resistance.
4. Burners shall be of the in-shot type constructed of aluminum coated steel.
5. All gas piping and electric power shall enter the unit cabinet at a single location.

I. Controls and Safeties:
1. Unit controls shall be complete with self-contained low voltage control circuit.
2. Units shall incorporate an internal compressor protector that provides reset capability.
3. Unit shall provide high- and low-/loss-of-charge pressure safety protection.

J. Operating Characteristics:
1. Unit shall be capable of starting and running at 125°F (51.6°C) ambient outdoor temperature, exceeding maximum load criteria of ARI Standard 240.
2. Compressor shall be capable of operation down to 55°F (12.7°C) ambient outdoor temperature in cooling and -10°F in heating.
3. Unit shall be capable of low-ambient cooling (below 55°F (12.7°C) ambient outdoor temperature) with low-ambient cooling enabled on the UI.

K. Electrical Requirements:
All unit power wiring shall enter unit cabinet at a single location.

L. Motors:
1. Compressor motors shall be of the refrigerant-cooled type with line-break thermal and current overload protection.
2. All fan motors shall have permanently lubricated bearings and inherent automatic-reset thermal overload protection.
3. Outdoor fan motor shall be totally enclosed.

M. Grille
1. Louvered Grille:
Louvered grille shall be standard on all units.

GUIDE SPECIFICATIONS (CONT)

N. Special Features:

1. Coil Options:
   Shall include factory-installed optional tin-plated indoor copper/copper and vinyl-coated refrigerant coils.
2. Flat Roof Curb:
   Curbs shall have seal strip and a wood nailer for flashing and shall be installed per manufacturer's instructions.
3. Manual Outdoor Air Damper:
   Package shall consist of damper, bird screen, and rain hood which can be preset to admit outdoor air for year-round ventilation.
4. Infinity™ User Interface:
   To provide for two-stage heat pump heating, two-stage cooling, and electric (auxiliary) heat, in addition to manual or automatic changeover and indoor fan control.
5. Low-Ambient Cooling:
   Low-ambient cooling must be enabled in the UI setup to allow unit to operate down to 0°F (-17°C) outdoor ambient temperature in cooling.
6. Filter Rack Kit:
   Shall provide filter mounting for downflow and horizontal applications.
7. Square-To-Round Duct Transitions:
   Shall have the ability to convert the supply and return openings from rectangular to round (024-048 sizes only).
8. Crankcase Heater:
   Shall provide anti-floodback protection for low-load cooling applications. (Standard on 042-060 sizes.)
9. Compressor Hard Start Kit:
   Shall be available to give a boost to the compressor motor at each start-up.
10. Natural-to-Propane Conversion Kit:
    Shall be complete with all required hardware to convert to liquid propane (LP) operation at 3.5 in. wg manifold pressure.
11. High Altitude Kit:
    Shall consist of natural gas orifices to compensate for gas heat operation at 2001 to 6000 ft above sea level.
12. Low NOx (Natural Gas only) Option:
    Shall provide NOx reduction to values below 40 nanograms/joule to meet California emission requirements.

Copyright 2007 Carrier Corp. • 7310 W. Morris St. • Indianapolis, IN 46231
Printed in U.S.A. Edition Date: 03/07 **Catalog No: 48XT–2PD**

Manufacturer reserves the right to change, at any time, specifications and designs without notice and without obligations.

Replaces: 48XT–1PD