50NL-B
Comfort™ 13.4 SEER2 Single-Packaged Air Conditioner System with Puron Advance™ (R-454B) Refrigerant
Single Phase 2-5 Nominal Tons (Sizes 24-60)
Three Phase 3-5 Nominal Tons (Sizes 36-60)

Product Data

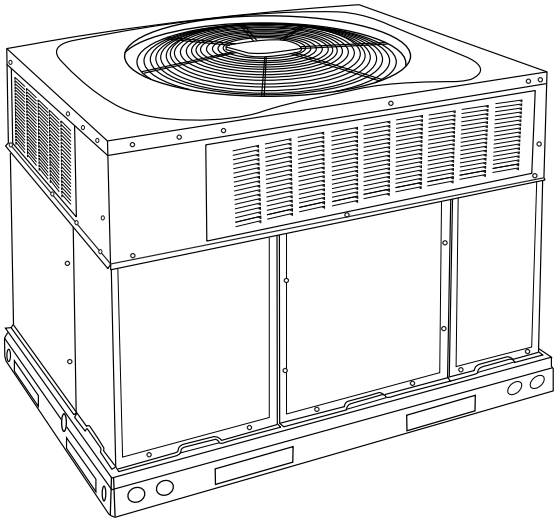

A09033

Fig. 1 – Unit 50NL

Single-Packaged Products with Energy-Saving Features and Puron Advance™ refrigerant.

- 13.4 SEER2 / 11.05 EER2
- ECM Motor-Standard
- Low Sound Levels
- Louver Condenser Coil Guard-Standard
- Cabinet air leakage of 2.0% or less at .5 in. W.C. when tested in accordance with ASHRAE standard 193
- Refrigerant leak detection dissipation system for added safety
- Maximum allowed elevation is 10,000 ft (3,048 m) above sea level.

Features/Benefits

One-piece cooling unit with optional electric heater, low sound levels, easy installation, low maintenance, and dependable performance.

Puron Advance is Carrier's latest choice of refrigerant to help meet the 2025 GWP requirement. This unit is designed and tested with Puron Advance and contains a dissipation system.

Easy Installation

Factory-assembled package is a compact, fully self-contained, electric cooling unit that is prewired, pre-piped, and pre-charged for minimum installation expense. These units are available in a variety of standard cooling sizes with voltage options to meet residential and light commercial requirements. Units are lightweight and install easily on a rooftop or at ground level. The high tech composite base eliminates rust problems associated with ground level applications.

Innovative Unit Base Design

On the inside a high-tech composite material will not rust and incorporates a sloped drain pan which improves drainage and helps inhibit mold, algae and bacterial growth. On the outside metal base rails provide added stability as well as easier handling and rigging.

Convertible Duct Configuration

Unit is designed for use in either downflow or horizontal applications. Each unit is converted from horizontal to downflow and includes horizontal duct covers. Downflow operation is provided in the field to allow vertical ductwork connections. The basepan seals on the bottom openings to ensure a positive seal in the vertical airflow mode.

Efficient operation high-efficiency design offers SEER2 (Seasonal Energy Efficiency Ratios) of 13.4. (See page 3.)

Durable, Dependable Components

ECM motor is standard on all models.

Direct-drive PSC (Permanent Split Capacitor) condenser-fan motors are designed to help reduce energy consumption and provide for cooing operation down to 40°F (4.4°C) outdoor temperature. Low ambient kit is available as a field-installed accessory.

Refrigerant system is designed to provide dependability. Liquid filter driers are used to promote clean, unrestricted operation. Each unit leaves the factory with non-ozone depleting and low global warming potential Puron Advance (R-454B) refrigerant charge. Refrigerant service connections make checking operating pressures easier. Factory-installed leak detection dissipation system for added safety.

High Pressure Switch provide added reliability for the compressor.

Indoor and outdoor coils are computer-designed for optimum heat transfer and efficiency. The indoor coil is fabricated from aluminum tube and aluminum fins and is located inside the unit for protection against damage. The outdoor coil is internally mounted on the top tier of the unit.

Low sound ratings ensure a quiet indoor and outdoor environment with sound ratings as low as 69.0 dBA. (See page 3.)

Easy to service cabinets provide easy 3 panel accessibility to serviceable components during maintenance and installation. The basepan with integrated drain pan provides easy ground level installation with a mounting pad. A nesting feature ensures a positive basepan to roof curb seal when the unit is roof mounted. A convenient 3/4-in. (19.05 mm) wide perimeter flange makes frame mounting on a rooftop easy.

Standard horizontal metal duct covers with insulation come with the unit and cover the horizontal duct openings. These can be left in place if the units are converted to downflow.

Cabinets are constructed of heavyduty, phosphated, zinc-coated prepainted steel capable of withstanding 500 hours in salt spray. Interior surfaces of the evaporator/heat exchanger compartment are insulated with cleanable semi-rigid insulation board, which keeps the conditioned air from being affected by the outdoor ambient temperature and provides improved indoor air quality. (Conforms to American Society of Heating, Refrigeration and Air Conditioning Engineers No. 62P.) The sloped drain pan minimizes standing water in the drain. An external drain is provided.

Limited Warranty*

• Default 5 year parts limited warranty

-10 year parts limited warranty with timely registration. Equipment must be registered within 90 days of original installation, except in jurisdictions where warranty benefits cannot be conditioned on registration.

* Applies to original purchaser/homeowner and 5 years to subsequent owners.

• Default 5-year on compressor limited warranty

• -10-year on compressor limited warranty with timely registration. Equipment must be registered within 90 days of original installation, except in jurisdictions where warranty benefits cannot be conditioned on registration.

* Applies to original purchaser/homeowner and 5 years to subsequent owners.

See warranty certificate for complete details and restrictions

Table of Contents

Features/Benefits 1
Model Number Nomenclature 2
AHRI Capacities 3
Unit Dimensions 8
Roof Curb Accessory - 24-60 10
Selection Procedure (with example) 11
Performance Data 12
Typical Piping and Wiring 18
Application Data 18
Connection Wiring Schematic 208/230-1-60 21
Ladder Wiring Schematic 208/230-1-60 22
Connection Wiring Schematic 208/230-3-60 23
Ladder Wiring Schematic 208/230-3-60 24
Connection Wiring Schematic 460-3-60 25
Ladder Wiring Schematic 460-3-60 26
Controls 27
Guide Specifications 28

Model Number Nomenclature

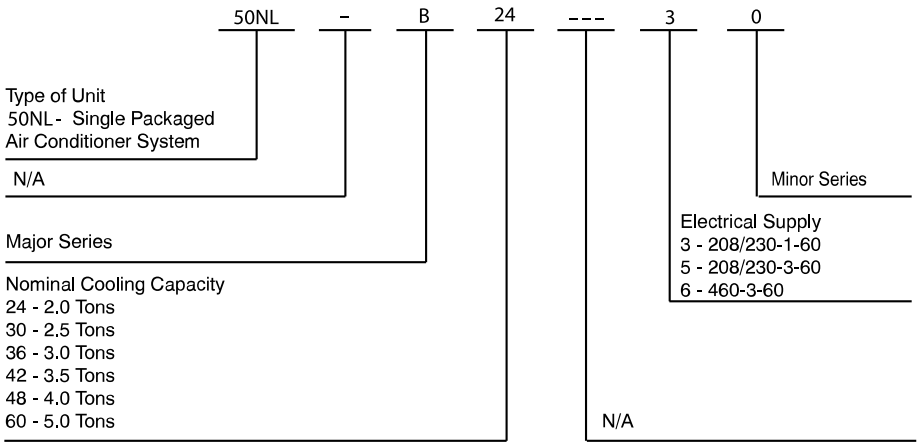

ASHRAE 90.1 COMPLIANT

Intertek

AHRI CERTIFIED™ www.ahridirectory.org

Use of the AHRI Certified TM Mark indicates a manufacturer's participation in the program For verification of certification for individual products, go to www.ahridirectory.org.

SAP ORDERING NO.	NOMINAL COOLING CAPACITY (Btuh)	VOLTS-PHASE (60 HZ)	APPROX SHIP WT (LB)
50NL-B24---3	24,000	208/230-1	307
50NL-B30---3	30,000	208/230-1	316
50NL-B36---3	36,000	208/230-1	370
50NL-B36---5	36,000	208/230-3	370
50NL-B36---6	36,000	460-3	370
50NL-B42---3	42,000	208/230-1	398
50NL-B42---5	42,000	208/230-3	398
50NL-B42---6	42,000	460-3	398
50NL-B48---3	48,000	208/230-1	447
50NL-B48---5	48,000	208/230-3	447
50NL-B48---6	48,000	460-3	447
50NL-B60---3	60,000	208/230-1	452
50NL-B60---5	60,000	208/230-3	452
50NL-B60---6	60,000	460-3	452

AHRI* Capacities

Cooling Capacities and Efficiencies

UNIT SIZE	NOMINAL TONS	STANDARD CFM	COOLING CAPACITY (BTUH)†	EER2‡	SEER2**
24	2	750	23200	11.05	13.4
30	2.5	950	28800	11.05	13.4
36	3	1150	34400	11.05	13.4
42	3.5	1350	40000	11.05	13.4
48	4	1600	46000	11.05	13.4
60	5	1750	56000	11.05	13.4

*. Air Conditioning, Heating & Refrigeration Institute.
† Rated in accordance with U.S. Government DOE Department of Energy) test procedures and/or AHRI Standards 210/240.
‡ At "A" conditions-80°F (26.7°C) indoor db/67°F (19.4°C) indoor wb & 95°F (35°C) outdoor db.
** Rated in accordance with AHRI Standard 270.
Notes:
1. Ratings are net values, reflecting the effects of circulating fan heat.
Ratings are based on:
Cooling Standard: 80°F (26.7°C) db, 67°F wb (19.4°C) indoor entering-air temperature and 95°F db (35°C) outdoor entering-air temperature.
2. Before purchasing this appliance, read important energy cost and efficiency information available from your retailer.

A-Weighted Sound Power Level

UNIT SIZE	STANDARD RATING (dBA)	TYPICAL OCTAVE BAND SPECTRUM (dBA without tone adjustment)						
		125	250	500	1000	2000	4000	8000
24	69	59	62	63	63	61	57	53
30	73	59	63	67	70	64	60	56
36	75	66	69	71	67	64	60	55
42	74	60	63	68	70	65	60	55
48	75	61	64	68	71	66	64	58
60	75	61	66	71	67	65	61	54

NOTE: Tested in compliance with AHRI 270 but not listed with AHRI.

Physical Data-Unit

UNIT SIZE	24	30	36	42	48	60
NOMINAL CAPACITY (ton)	2	2-1/2	3	3-1/2	4	5
SHIPPING WEIGHT lb. SHIPPING WEIGHT (kg)	307 139	316 143	370 168	398 181	477 203	452 205
COMPRESSORS	Scroll					
Quantity	1					
REFRIGERANT (R-454B) Quantity lb Quantity (kg)	4.25 1.9	4.85 2.2	6.25 2.8	5.25 2.4	6.55 3.0	8.50 3.9
REFRIGERANT METERING DEVICE	Orifice					TXV
MINIMUM CONDITIONED SPACE AREA (sq. ft.)	76	76	106	91	106	137
ORIFICE ID in./mm	.055 / 1.40	.061 / 1.55	.065 / 1.65	.070 / 1.78	.078 / 1.98	N/A
OUTDOOR COIL Rows...Fins/in. Face Area (sq ft)	1...21 11.9	1...21 13.6	1...21 13.6	1...21 13.6	1...21 23.3	2...21 17.5
OUTDOOR FAN Nominal Cfm Diameter in. Diameter (mm) Motor Hp (Rpm)	2500 24 609.6 1/12 (810)	3200 24 609.6 1/5 (810)	3500 26 660.4 1/5 (810)	3500 26 660.4 1/5 (810)	3500 26 660.4 1/5 (810)	3500 26 660.4 1/5 (810)
INDOOR COIL Rows...Fins/in. Face Area (sq ft)	3...17 3.7	3...17 3.7	2...17 5.6	3...17 4.7	3...17 5.6	3...17 5.6
INDOOR BLOWER Required Minimum Dissipation Airflow (Cfm) Nominal Cooling Airflow (Cfm) Size in. (DxW) Size mm (DxW) Motor HP (RPM)	133 750 10x10 254x254 1/2 (1050)	133 950 10x10 254x254 1/2 (1050)	186 1150 11x10 279.4x254 1/2(1000)	160 1350 11x10 279.4x254 3/4 (1075)	186 1600 11x10 279.4x254 1.0 (1075)	239 1750 11x10 279.4x254 1.0 (1040)
HIGH-PRESSURE SWITCH (psig) Cut-out Reset (Auto)	650 +/- 15 420 +/- 25					
LOSS-OF-CHARGE / LOW-PRESSURE SWITCH (psig) cut-out Reset (auto)	N/A					
RETURN-AIR FILTERS* Throwaway Size	2 each 20x12x1 in. (508x305x25 mm)		1 each 24x18x1 in. (610x457x25 mm) 24x16x1 in. (610x406x25 mm)	1 each 24x14 x1 in. (610x356x25 mm) 24x16x1 in. (610x406x25 mm)	1 each 24x18x1 in. (610x457x25 mm) 24x16x1 in. (610x406x25 mm)	

*. Required filter sizes shown are based on the larger of the AHRI (Air Conditioning Heating and Refrigeration Institute) rated cooling airflow or the heating airflow velocity of 300 to 350 ft/minute for throwaway type or 450 ft/minute for high-capacity type. Air filter pressure drop for non-standard filters must not exceed 0.08 in. W.C.

Accessory Kit Filter Sizes (Shipped With Kit)

Kit	Filter 1 Size	Filter 2 Size
CPFILTRK007A00	12"x20"x1"	12"x20"x1"
CPFILTRK008A00	14"x24"x1"	16"x24"x1"
CPFILTRK009A00	16"x24"x1"	18"x24"x1"
CPMANDPR007A00	12"x20"x1"	12"x20"x1"
CPMANDPR008A00	14"x24"x1"	16"x24"x1"
CPMANDPR009A00	16"x24"x1"	18"x24"x1"
CPECOMZR007B00	10"x20"x1"	10"x20"x1"
CPECOMZR008A00	14"x24"x1"	16"x24"x1"
CPECOMZR009A00	16"x24"x1"	18"x24"x1"
CPECOMZR010B00	12"x20"x1"	12"x20"x1"
CPECOMZR011B00	14"x20"x1"	16"x20"x1"
CPECOMZR012B00	16"x20"x1"	18"x20"x1"

Manufacturer reserves the right to change, at any time, specifications and designs without notice and without obligations.

Electric Heat Pressure Drop Tables (IN. W.C.)

Small Cabinet: 24-30

STATIC	CFM											
	500	600	700	800	900	1000	1100	1200	1300	1400	1500	1600
5 kW	0.00	0.00	0.00	0.00	0.00	0.00	0.00	0.00	0.02	0.04	0.06	0.07
10 kW	0.00	0.00	0.00	0.00	0.00	0.02	0.04	0.06	0.07	0.09	0.10	0.11
15 kW	0.00	0.00	0.00	0.02	0.04	0.06	0.08	0.10	0.12	0.14	0.16	0.18
20 kW	0.00	0.00	0.02	0.04	0.06	0.08	0.09	0.11	0.13	0.15	0.17	0.19

Large Cabinet: 36-60

STATIC	CFM														
	1100	1200	1300	1400	1500	1600	1700	1800	1900	2000	2100	2200	2300	2400	2500
5 kW	0.00	0.00	0.00	0.01	0.02	0.03	0.04	0.05	0.06	0.07	0.08	0.09	0.10	0.11	0.12
10 kW	0.00	0.00	0.01	0.02	0.03	0.04	0.05	0.06	0.07	0.08	0.09	0.10	0.11	0.12	0.13
15 kW	0.00	0.02	0.03	0.04	0.05	0.06	0.07	0.08	0.09	0.10	0.11	0.12	0.13	0.14	0.15
20 kW	0.02	0.03	0.04	0.05	0.06	0.07	0.08	0.09	0.10	0.11	0.12	0.13	0.14	0.15	0.16

Manufacturer reserves the right to change, at any time, specifications and designs without notice and without obligations.

Accessories

AREA	DESCRIPTION	PART NO.	USED WITH
Curbs and Duct Connections	Flat Roof Curbs, 14" High (-011 Kit may be used with 36-60 sizes with overhang)	CPRFCURB011B00	24-30
		CPRFCURB013B00	36-60
	Adapter Curb for 2008 and earlier roofcurb with 2009 and later baserail units	CPADCURB001A00	24-30
		CPADCURB002A00	36-60
	Gasket Kit for 2008 and earlier roofcurb with 2009 and later baserail units	CPGSKTKIT001A00	All
	Square to Round (1 set of 2, use with horizontal duct flanges)	CPDUCFLG002A00	24-48
Internal Filter Racks/Economizers/ Dampers	Economizer - Vertical, Gear-driven, Outdoor dry bulb sensor, Filter Rack with 1" filters	CPECOMZR007B00	24-30
		CPECOMZR008A00	42
		CPECOMZR009A00	36, 48-60
	Economizer - Horizontal, Gear-driven, Outdoor dry bulb sensor, Filter Rack with 1" filters	CPECOMZR010B00	24-30
		CPECOMZR011B00	42
		CPECOMZR012B00	36, 48-60
	Outdoor Enthalpy Control (Replaces outdoor dry bulb sensor in economizer kit)	AXB078ENT	All
	Manual Outside Air Damper (Includes filter rack and 1" filters, same as CPFILTRK kit)	CPMANDPR007A00	24-30
		CPMANDPR008A00	42
		CPMANDPR009A00	36, 48-60
	Internal Filter Rack (Includes 1" filters)	CPFILTRK007A00	24-30
		CPFILTRK008A00	42
		CPFILTRK009A00	36, 48-60
AC Accessories	240V Crankcase Heater (Factory-Installed on 208/230 VAC-3 phase units)	CPCRKHTR008A00	24-36
		CPCRKHTR004A00	42-60
	Low Ambient Control (Pressure Switch)	KSALA0301410	All
	Low Pressure Switch	CPLPSCTL001A00	All
	Time Guard II (5 minute compressor delay anti-short cycle protection. Some non-corporate thermostats do not have short cycle protection, for which use of this accessory is recommended.)	CRTIMEGD001A00	All
	PTC Compressor Start Assist Kit (For single phase units only)	CPHSTART002A00	All
Electric Heat Kits	**ELECTRIC HEATERS (208/230 VAC -SINGLE PHASE 60 Hz)**		
	NOMINAL CAPACITY (kW)	**FUSES**	**PART NO.**	**USED WITH**
	5.0	No	CPHEATER052B0*	All
	5.0	Yes	CPHEATER064B0*	All
	7.2	No	CPHEATER069B0*	All
	7.2	Yes	CPHEATER070B0*	All
	10.0	No	CPHEATER065B0*	24-42
	10.0	Yes	CPHEATER050B0*	All
	15.0	Yes	CPHEATER051B0*	42
	15.0	Yes	CPHEATER066B0*	42-60
	15.0	Yes	CPHEATER133B0*	30-36
	20.0	Yes	CPHEATER053B0*	42
	20.0	Yes	CPHEATER054B0*	42-60
	ELECTRIC HEATERS (208/230 VAC -THREE PHASE 60 Hz)		
	5.0	No	CPHEATER055B0*	36-60
	10.0	No	CPHEATER056B0*	36-60
	10.0	Yes	CPHEATER068B0*	36-60
	15.0	No	CPHEATER057B0*	36-60
	15.0	Yes	CPHEATER058B0*	36-60
	20.0	Yes	CPHEATER059B0*	42-60
	ELECTRIC HEATERS (460 VAC -THREE PHASE 60 Hz)		
	10.0	No	CPHEATER061B0*	36-60
	15.0	No	CPHEATER062B0*	36-60
	20.0	No	CPHEATER063B0*	42-60

* May be any character.

Minimum Airflow for Safe Electric Heater Operation (CFM)

SIZE	24	30	36	42	48	60
Cfm	**800**	**1000**	**1200**	**1400**	**1600**	**1750**

ECONOMIZER

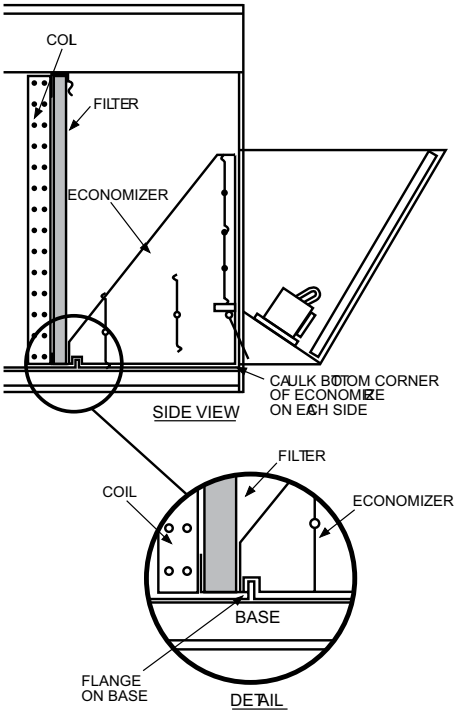

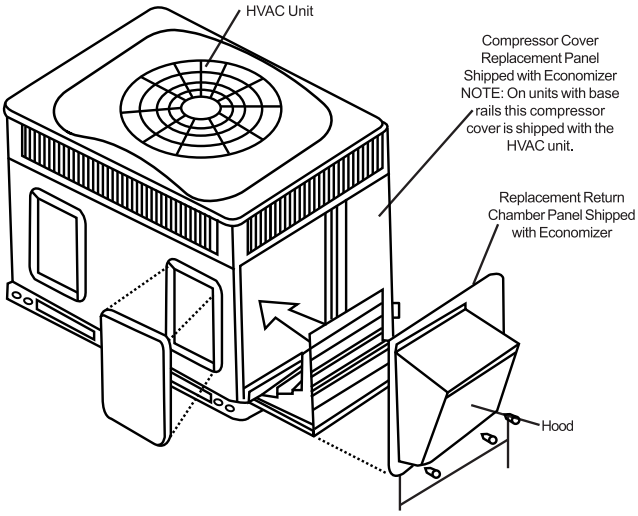

Vertical Economizer

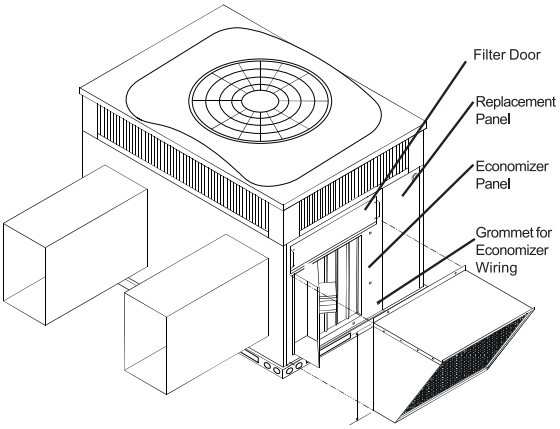

Horizontal Economizer

FILTER RACK

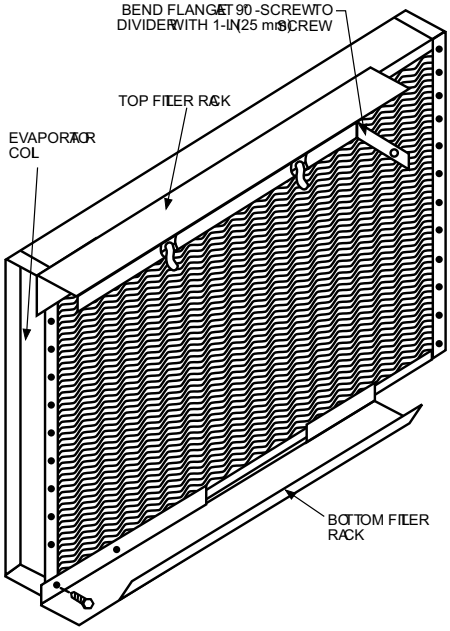

MANUAL OUTSIDE AIR DAMPER

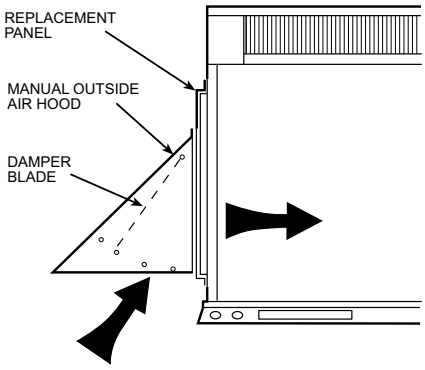

A09375

Unit Dimensions

24-30

COOLING CAPACITY	UNIT WT.		UNIT HEIGHT		CENTER OF GRAVITY			
	LB	KG	"A" in	"A" mm	"X" in	"X" mm	"Y" in	"Y" mm	"Z" in	"Z" mm
24	296.0	134.3	41.0	1041	20.5	520.7	15.8	400.1	16.6	422.3
30	305.0	138.4	43.0	1092	20.5	520.7	15.8	400.1	16.6	422.3

UNIT	CORNER WEIGHT							
	"1" LB	"1" KG	"2" LB	"2" KG	"3" LB	"3" KG	"4" LB	"4" KG
24	44.0	20.1	59.0	26.9	89.0	40.3	104.0	47.0
30	46.0	20.8	61.0	27.7	92.0	41.5	107.0	48.4

REQUIRED CLEARANCES TO COMBUSTIBLE MAT'L.

	INCHES [MM]
TOP OF UNIT	14 [355.6]
DUCT SIDE OF UNIT	2 [50.8]
SIDE OPPOSITE DUCTS	14 [355.6]
BOTTOM OF UNIT	0 [0.0]
ELECTRICAL PANEL	36 [914.4]

NEC: REQUIRED CLEARANCES.

	INCHES [MM]
BETWEEN UNITS, POWER ENTRY SIDE	42 [1066.8]
UNIT AND UNGROUNDED SURFACES POWER ENTRY SIDE	36 [914.0]
UNIT AND BLOCK OR CONCRETE WALLS AND OTHER GROUNDED SURFACES, POWER ENTRY SIDE	42 [1066.8]

REQUIRED CLEARANCE FOR OPERATION AND SERVICING

	INCHES [MM]
EVAP. COIL ACCESS SIDE	36 [914.0]
POWER ENTRY SIDE	42 [1066.8]
(EXCEPT FOR NEC REQUIREMENTS)	
UNIT TOP	48 [1219.2]
SIDE OPPOSITE DUCTS	36 [914.0]
DUCT PANEL	12 [304.8]*

*MINIMUM DISTANCES:IF UNIT IS PLACED LESS THAN 12 [304.8] FROM WALL SYSTEM,THEN SYSTEM PERFORMANCE MAYBE COMPROMISED.

DIMENSIONS IN [] ARE IN MILLIMETERS

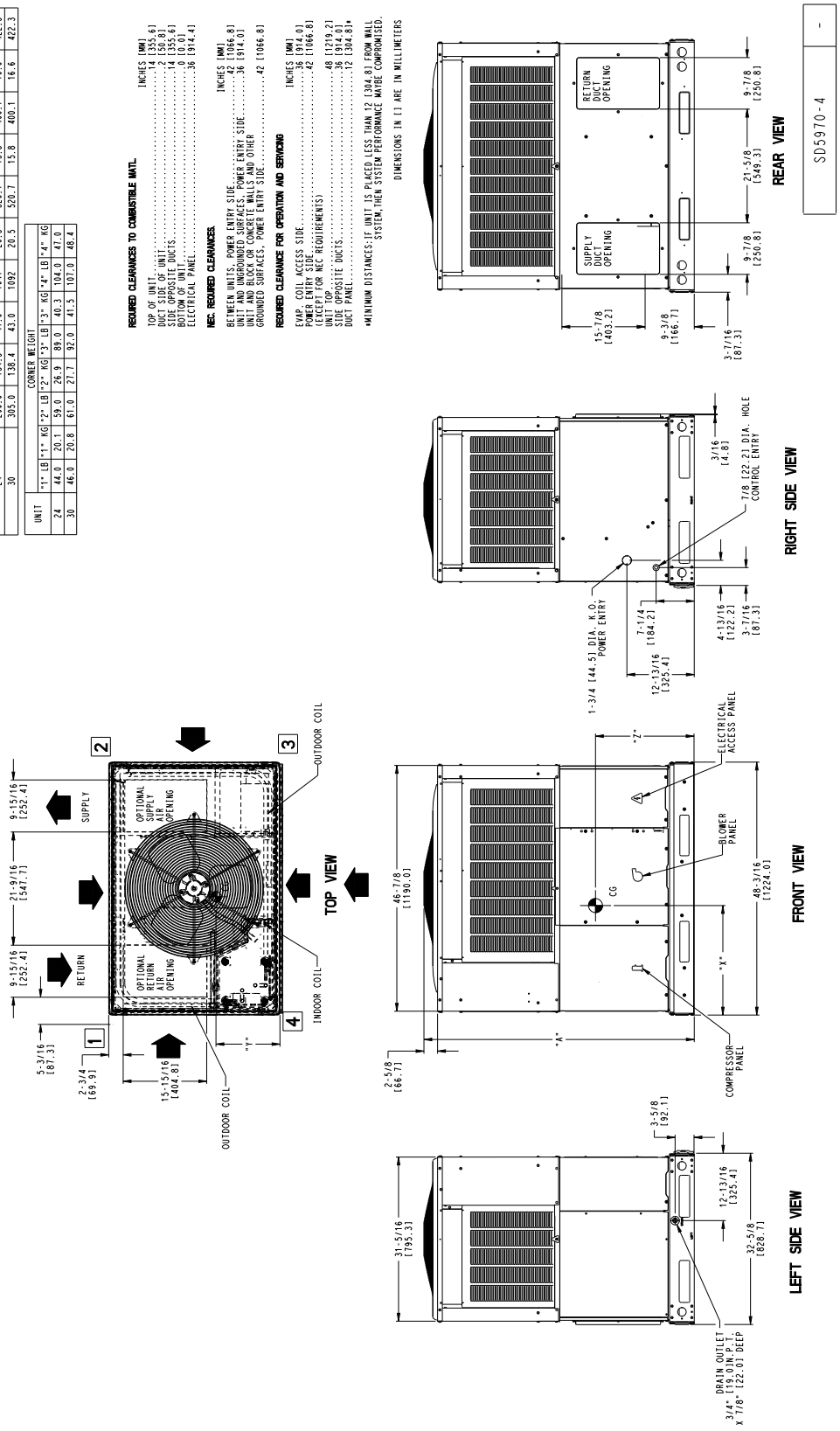

A230470

Unit Dimensions

36-60

COOLING CAPACITY	UNIT WT.		UNIT HEIGHT		CENTER OF GRAVITY					
	LB	KG	"A" in	"A" mm	"X" in	"X" mm	"Y" in	"Y" mm	"Z" in	"Z" mm
36	356.0	161.5	43.0	1092	20.3	514.4	17.5	444.5	17.6	447.7
42	384.0	174.2	43.0	1092	20.3	514.4	17.5	444.5	17.6	447.7
48	433.0	196.5	51.0	1295	20.3	514.4	17.5	444.5	18.0	457.2
60	438.0	198.7	47.0	1194	20.3	514.4	17.5	444.5	18.0	457.2

UNIT	CORNER WEIGHT							
	"1" LB	"1" KG	"2" LB	"2" KG	"3" LB	"3" KG	"4" LB	"4" KG
36	53.0	24.2	71.0	32.3	107.0	48.5	125.0	56.5
42	58.0	26.1	77.0	34.8	115.0	52.3	134.0	61.0
48	65.0	29.5	87.0	39.3	130.0	58.9	152.0	68.8
60	66.0	29.8	88.0	39.7	131.0	59.6	153.0	69.6

REQUIRED CLEARANCES TO COMBUSTIBLE MATL.

	INCHES [MM]
TOP OF UNIT	14 [355.6]
DUCT SIDE OF UNIT	2 [50.8]
SIDE OPPOSITE DUCTS	14 [355.6]
BOTTOM OF UNIT	0 [0.0]
ELECTRICAL PANEL	36 [914.4]

NEC. REQUIRED CLEARANCES.

	INCHES [MM]
BETWEEN UNITS, POWER ENTRY SIDE	42 [1066.8]
UNIT AND UNGROUNDED SURFACES, POWER ENTRY SIDE	36 [914.0]
UNIT AND BLOCK OR CONCRETE WALLS AND OTHER GROUNDED SURFACES, POWER ENTRY SIDE	42 [1066.8]

REQUIRED CLEARANCE FOR OPERATION AND SERVICING

	INCHES [MM]
EVAP. COIL ACCESS SIDE	36 [914.0]
POWER ENTRY SIDE	42 [1066.8]
(EXCEPT FOR NEC REQUIREMENTS)	
UNIT TOP	48 [1219.2]
SIDE OPPOSITE DUCTS	36 [914.0]
DUCT PANEL	12 [304.8]*

*MINIMUM DISTANCES: IF UNIT IS PLACED LESS THAN 12 [304.8] FROM WALL SYSTEM, THEN SYSTEM PERFORMANCE MAYBE COMPROMISED.

DIMENSIONS IN [] ARE IN MILLIMETERS

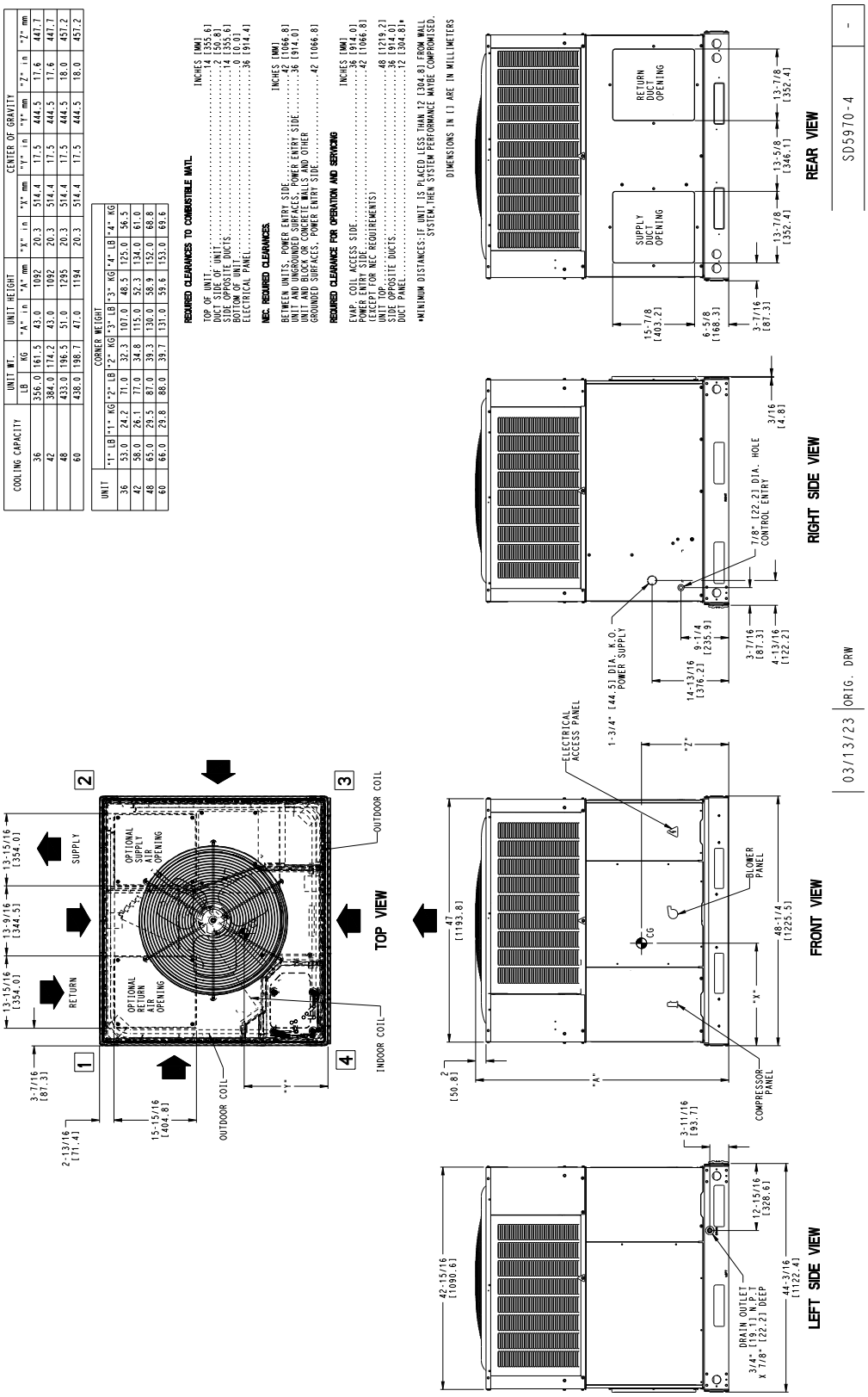

A230471

Roof Curb Accessory - 24-60

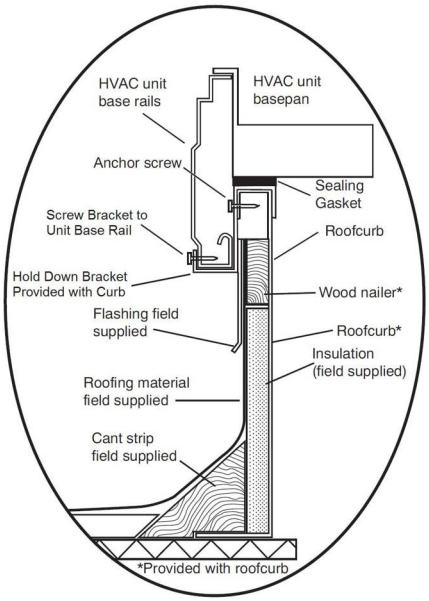

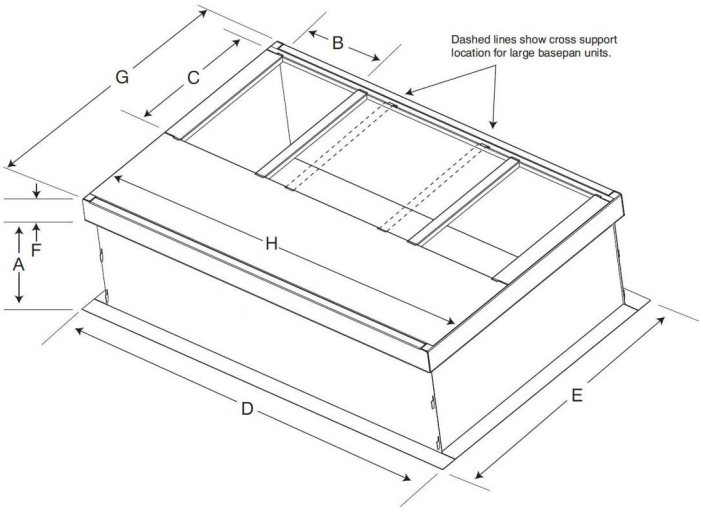

SMALL/COMMON CURB

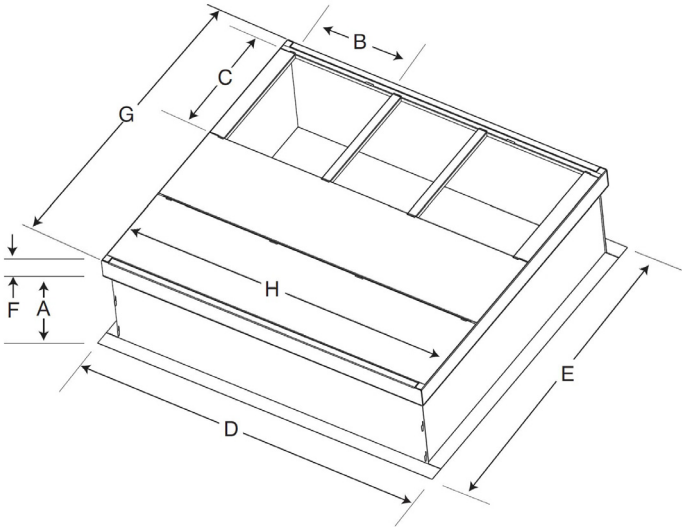

LARGE CURB

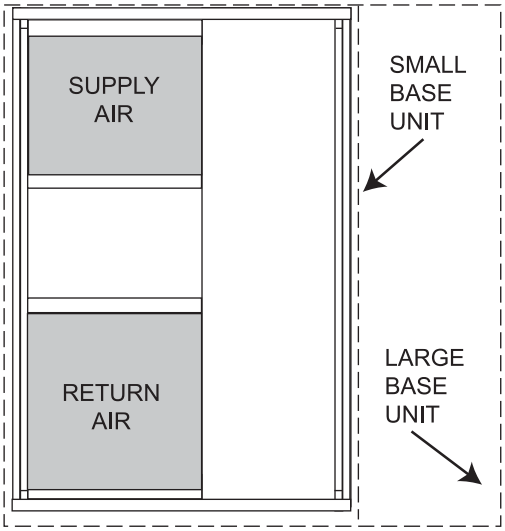

UNIT PLACEMENT ON COMMON CURB

SMALL OR LARGE BASE UNIT

A180216

UNIT SIZE	CATALOG NUMBER	A IN. (mm)	B (small/common base) IN. (mm)*	B (large base) IN. (mm)*	C IN. (mm)	D IN. (mm)	E IN. (mm)	F IN. (mm)	G IN. (mm)	H IN. (mm)
Small or Large	CPRFCURB011B00	14 (356)	10 (254)	14 (356)	16 (406)	47.8 (1214)	32.4 (822)	2.7 (69)	30.6 (778)	46.1 (1170)
Large	CPRFCURB013B00	14 (356)	14 (356)				43.9 (1116)		42.2 (1072)	

*. Part Number CPRCURB011B00 can be used on both small and large basepan units. The cross supports must be located based on whether the unit is a small basepan or a large basepan.

NOTES:

1. Roof curb must be set up for unit being installed.
2. Seal strip must be applied, as required, to unit being installed.
3. Roof curb is made of 16-gauge steel.
4. Attach ductwork to curb (flanges of duct rest on curb).
5. Insulated panels: 1-in. (25.4 mm) thick fiberglass 1 lb. density.

Manufacturer reserves the right to change, at any time, specifications and designs without notice and without obligations.

Selection Procedure (with example)

DETERMINE COOLING AND HEATING REQUIREMENTS AT DESIGN CONDITIONS:

Given:

Required Cooling Capacity (TC) ..... 46,000 Btuh

Sensible Heat Capacity (SHC) ..... 34,000 Btuh

Required Heating Capacity ..... 64,000 Btuh

Condenser Entering Air Temperature ..... 95°F(35°C)

Indoor-Air Temperature ..... 80°F (26°C) edb 67°F (19°C) ewb

Evaporator Air Quantity ..... 1600 CFM

External Static Pressure ..... 0.440 IN. W.C.

Electrical Characteristics 230-1-60

SELECT UNIT BASED ON REQUIRED COOLING CAPACITY

Enter Performance Data table at condenser entering temperature of 95°F (35°C). Unit 48 at 1600 CFM and 67°F (19°C) ewb (entering wet bulb) will provide a total capacity of 46,000 Btuh and a SHC of 34,700 Btuh. Calculate SHC correction, if required, using Note 4 under Cooling Capacities tables.

SELECT ELECTRIC HEAT

The required heating capacity is 68,000 Btuh.

Determine additional electric heat capacity in kW.

$$\frac{64{,}000 \text{ Btuh}}{3414 \text{ Btuh/kW}} = 18.7 \text{ kW of heat required}$$

Enter the electric Heater Packages table for 208/240, single-phase, 48 unit. The 20 kW heater at 240v most closely satisfies the heating required. To calculate kW at 230 vac, multiply the heater kW by multiplication factor 0.92 found in the Wattage Multiplication Factors table.

20 kW x 0.92 = 18.4 kW

18.4 kW x 3414 = 62818 Btuh, which is very close to the 64,000 Btuh desired.

DETERMINE FAN SPEED AND POWER REQUIREMENTS AT DESIGN CONDITIONS.

Before entering the air delivery tables, calculate the total static pressure required. From the given example, the Wet Coil Pressure Drop Table, and the Filter Pressure Drop Table:

External Static Pressure	0.300 IN. W.C.
Filter	0.060 IN. W.C.
Wet Coil Pressure Drop	0.070 IN. W.C.
Total Static Pressure	0.43 IN. W.C.

Enter the table for Dry Coil Air Delivery—At 0.43 IN. W.C. ESP (external static pressure) and MED speed the motor delivers between 1664 CFM and 1627 cfm. Interpolation estimates 1653 CFM at .43 IN. W.C. Thus, MED delivers CFM needed.

SELECT UNIT THAT CORRESPONDS TO POWER SOURCE AVAILABLE

The Electrical Data Table shows that the unit is designed to operate at 208-1-60.

Manufacturer reserves the right to change, at any time, specifications and designs without notice and without obligations.

Performance Data

24 Size

EVAPORATOR AIR		CONDENSER ENTERING AIR TEMPEREATURES °F (°C)																	
		75 (23.9)			85 (29.4)			95 (35)			105 (40.6)			115 (46.1)			125 (51.7)		
CFM /	EWB	Capacity MBtuh		Total	Capacity MBtuh		Total	Capacity MBtuh		Total	Capacity MBtuh		Total	Capacity MBtuh		Total	Capacity MBtuh		Total
BF	°F(°C)	Total	Sens	Sys KW	Total	Sens	Sys KW	Total	Sens	Sys KW	Total	Sens	Sys KW	Total	Sens	Sys KW	Total	Sens	Sys KW
700 / .08	57 (13.8)	23.8	23.8	1.6	23.0	23.0	1.8	21.9	21.9	2.0	19.3	19.3	2.2	17.8	17.8	2.4	16.3	16.3	2.7
	62 (16.6)	24.8	22.2	1.6	23.7	21.7	1.8	22.6	20.5	2.0	19.9	18.9	2.2	18.3	17.5	2.4	16.7	16.0	2.7
	63*(17.2)	25.3	17.9	1.6	24.1	17.3	1.8	22.8	16.8	2.0	19.8	16.1	2.2	18.1	15.4	2.4	16.1	14.9	2.7
	67(19.4)	27.2	18.7	1.6	25.9	18.1	1.8	24.5	17.5	2.0	22.0	16.8	2.2	20.3	16.1	2.4	18.4	15.5	2.7
	72 (22.2)	29.6	14.9	1.7	28.3	14.3	1.8	26.7	13.7	2.0	23.3	13.1	2.2	21.3	12.4	2.5	19.1	11.8	2.8
750 / .08	57 (13.8)	23.4	22.6	1.6	22.6	21.3	1.8	21.6	20.0	2.0	19.0	18.4	2.2	17.5	17.0	2.5	16.0	15.6	2.7
	62 (16.6)	23.7	21.6	1.6	22.6	21.1	1.8	21.6	20.0	2.0	19.0	18.4	2.2	17.5	17.0	2.5	16.0	15.6	2.7
	63*(17.2)	23.9	17.5	1.6	22.9	16.9	1.8	21.6	16.3	2.0	18.8	15.7	2.2	17.1	15.0	2.5	15.3	14.5	2.7
	67(19.4)	25.8	18.2	1.7	24.6	17.6	1.8	23.2	17.0	2.0	20.9	16.3	2.2	19.3	15.6	2.5	17.4	15.1	2.7
	72 (22.2)	28.1	14.6	1.7	26.8	13.9	1.8	25.4	13.4	2.0	22.1	12.7	2.3	20.2	12.0	2.5	18.1	11.5	2.8
900 / .09	57 (13.8)	25.9	25.7	1.7	25.0	24.3	1.8	23.8	22.8	2.0	21.0	21.0	2.3	19.3	19.3	2.5	17.7	17.7	2.8
	62 (16.6)	26.2	24.9	1.7	25.0	24.1	1.8	23.8	22.8	2.0	21.0	21.0	2.3	19.3	19.3	2.5	17.7	17.7	2.8
	63*(17.2)	26.4	19.9	1.7	25.2	19.3	1.8	23.8	18.6	2.0	20.7	17.9	2.3	18.9	17.1	2.5	16.9	16.6	2.8
	67(19.4)	28.4	20.7	1.7	27.1	20.1	1.9	25.6	19.4	2.1	23.1	18.6	2.3	21.3	17.8	2.5	19.2	17.2	2.8
	72 (22.2)	31.0	16.6	1.7	29.6	15.8	1.9	28.0	15.3	2.1	24.4	14.5	2.3	22.3	13.7	2.5	20.0	13.1	2.8

See Legend and Notes on page 15.

Performance Data

30 Size

EVAPORATOR AIR		CONDENSER ENTERING AIR TEMPEREATURES °F (°C)																	
		75 (23.9)			85 (29.4)			95 (35)			105 (40.6)			115 (46.1)			125 (51.7)		
CFM /	EWB	Capacity MBtuh		Total	Capacity MBtuh		Total	Capacity MBtuh		Total	Capacity MBtuh		Total	Capacity MBtuh		Total	Capacity MBtuh		Total
BF	°F(°C)	Total	Sens	Sys KW	Total	Sens	Sys KW	Total	Sens	Sys KW	Total	Sens	Sys KW	Total	Sens	Sys KW	Total	Sens	Sys KW
875 / .09	57 (13.8)	29.2	29.2	2.0	28.2	28.2	2.2	26.9	26.9	2.4	22.9	22.9	2.7	21.3	21.3	2.9	19.5	19.5	3.1
	62 (16.6)	30.3	27.6	2.0	29.0	27.0	2.2	27.6	25.5	2.4	23.5	22.7	2.7	21.9	21.5	2.9	20.0	19.5	3.1
	63*(17.2)	30.9	22.3	2.0	29.5	21.6	2.2	27.9	20.8	2.4	23.5	19.6	2.7	21.6	19.2	2.9	19.3	18.1	3.1
	67(19.4)	33.3	23.2	2.0	31.8	22.5	2.2	30.0	21.7	2.5	26.4	20.6	2.7	24.6	20.0	2.9	22.2	19.1	3.1
	72 (22.2)	36.3	18.6	2.0	34.6	17.7	2.2	32.8	17.1	2.5	27.7	15.9	2.7	25.6	15.4	2.9	22.8	14.3	3.1
950 / .10	57 (13.8)	29.1	28.4	2.0	28.1	26.8	2.2	26.8	25.2	2.5	22.8	22.4	2.7	21.3	21.3	2.9	19.4	19.2	3.1
	62 (16.6)	29.4	27.3	2.0	28.1	26.6	2.2	26.8	25.2	2.5	22.8	22.4	2.7	21.3	21.3	2.9	19.4	19.2	3.1
	63*(17.2)	29.7	22.0	2.0	28.4	21.3	2.2	26.8	20.6	2.5	22.6	19.3	2.7	20.8	18.9	2.9	18.5	17.9	3.1
	67(19.4)	32.0	22.9	2.0	30.5	22.2	2.2	28.8	21.4	2.5	25.3	20.3	2.7	23.6	19.7	2.9	21.3	18.8	3.1
	72 (22.2)	34.8	18.3	2.1	33.3	17.5	2.3	31.5	16.9	2.5	26.6	15.7	2.7	24.6	15.2	2.9	22.0	14.1	3.2
1125 / .11	57 (13.8)	31.7	31.7	2.1	30.6	30.2	2.3	29.1	28.3	2.5	24.9	24.9	2.8	23.2	23.2	3.0	21.1	21.1	3.2
	62 (16.6)	32.0	31.0	2.1	30.6	29.9	2.3	29.2	28.3	2.5	24.9	24.9	2.8	23.2	23.2	3.0	21.1	21.1	3.2
	63*(17.2)	32.4	24.8	2.1	30.9	23.9	2.3	29.2	23.1	2.5	24.6	21.7	2.8	22.6	21.3	3.0	20.2	20.1	3.2
	67(19.4)	34.8	25.8	2.1	33.3	24.9	2.3	31.4	24.1	2.6	27.6	22.9	2.8	25.7	22.2	3.0	23.2	21.2	3.2
	72 (22.2)	38.0	20.6	2.1	36.3	19.7	2.3	34.3	19.0	2.6	29.0	17.6	2.8	26.8	17.1	3.0	23.9	15.9	3.2

See Legend and Notes on page 15.

Manufacturer reserves the right to change, at any time, specifications and designs without notice and without obligations.

Performance Data
36 Size

EVAPORATOR AIR		CONDENSER ENTERING AIR TEMPEREATURES °F (°C)																	
		75 (23.9)			85 (29.4)			95 (35)			105 (40.6)			115 (46.1)			125 (51.7)		
CFM / BF	EWB °F(°C)	Capacity MBtuh Total	Capacity MBtuh Sens	Total Sys KW	Capacity MBtuh Total	Capacity MBtuh Sens	Total Sys KW	Capacity MBtuh Total	Capacity MBtuh Sens	Total Sys KW	Capacity MBtuh Total	Capacity MBtuh Sens	Total Sys KW	Capacity MBtuh Total	Capacity MBtuh Sens	Total Sys KW	Capacity MBtuh Total	Capacity MBtuh Sens	Total Sys KW
1050 / .10	57 (13.8)	34.6	34.6	2.4	33.4	33.4	2.7	31.8	31.8	3.0	27.4	27.4	3.3	25.3	25.3	3.5	23.1	23.1	3.8
	62 (16.6)	35.9	33.0	2.4	34.3	32.2	2.7	32.7	30.5	3.0	28.2	27.1	3.3	26.0	25.5	3.5	23.7	23.3	3.8
	63*(17.2)	36.6	26.6	2.4	35.0	25.8	2.7	33.0	24.9	3.0	28.1	23.4	3.3	25.6	22.9	3.5	22.8	21.7	3.8
	67(19.4)	39.4	27.8	2.5	37.6	26.9	2.7	35.5	25.9	3.0	31.6	24.6	3.3	29.1	23.9	3.5	26.3	22.8	3.8
	72 (22.2)	42.9	22.2	2.5	41.0	21.2	2.7	38.8	20.4	3.0	33.2	19.0	3.3	30.3	18.4	3.6	27.1	17.1	3.8
1150 / .11	57 (13.8)	34.7	34.3	2.5	33.5	32.3	2.7	32.0	30.4	3.0	27.6	27.0	3.3	25.4	25.4	3.6	23.2	23.2	3.8
	62 (16.6)	35.1	32.9	2.5	33.5	32.1	2.7	32.0	30.4	3.0	27.6	27.0	3.3	25.4	25.4	3.6	23.2	23.2	3.8
	63*(17.2)	35.5	26.5	2.5	33.9	25.7	2.7	32.0	24.8	3.0	27.2	23.3	3.3	24.8	22.8	3.6	22.1	21.6	3.8
	67(19.4)	38.2	27.6	2.5	36.5	26.7	2.7	34.4	25.8	3.0	30.6	24.5	3.3	28.2	23.8	3.6	25.5	22.7	3.8
	72 (22.2)	41.6	22.1	2.5	39.7	21.1	2.8	37.6	20.3	3.1	32.1	18.9	3.3	29.3	18.3	3.6	26.2	17.0	3.9
1350 / .12	57 (13.8)	37.5	37.5	2.5	36.2	36.1	2.8	34.5	33.8	3.1	29.8	29.8	3.4	27.4	27.4	3.6	25.0	25.0	3.9
	62 (16.6)	37.9	37.1	2.5	36.2	35.8	2.8	34.6	33.8	3.1	29.8	29.8	3.4	27.4	27.4	3.6	25.0	25.0	3.9
	63*(17.2)	38.4	29.6	2.5	36.6	28.6	2.8	34.6	27.7	3.1	29.4	26.0	3.4	26.8	25.4	3.6	23.9	23.9	3.9
	67(19.4)	41.2	30.8	2.6	39.4	29.8	2.8	37.2	28.8	3.1	33.1	27.4	3.4	30.5	26.5	3.6	27.5	25.3	3.9
	72 (22.2)	45.0	24.7	2.6	42.9	23.6	2.8	40.6	22.7	3.1	34.7	21.1	3.4	31.7	20.4	3.7	28.3	19.0	3.9

See Legend and Notes on page 15.

Performance Data
42 Size

EVAPORATOR AIR		CONDENSER ENTERING AIR TEMPEREATURES °F (°C)																	
		75 (23.9)			85 (29.4)			95 (35)			105 (40.6)			115 (46.1)			125 (51.7)		
CFM / BF	EWB °F(°C)	Capacity MBtuh Total	Capacity MBtuh Sens	Total Sys KW	Capacity MBtuh Total	Capacity MBtuh Sens	Total Sys KW	Capacity MBtuh Total	Capacity MBtuh Sens	Total Sys KW	Capacity MBtuh Total	Capacity MBtuh Sens	Total Sys KW	Capacity MBtuh Total	Capacity MBtuh Sens	Total Sys KW	Capacity MBtuh Total	Capacity MBtuh Sens	Total Sys KW
1225 / .09	57 (13.8)	40.0	40.0	2.8	38.6	38.6	3.0	36.8	36.8	3.4	31.7	31.7	3.7	29.2	29.2	4.0	26.6	26.6	4.3
	62 (16.6)	41.5	38.8	2.8	39.6	37.8	3.0	37.8	35.8	3.4	32.6	31.8	3.7	30.0	29.5	4.0	27.4	26.9	4.3
	63*(17.2)	42.3	31.3	2.8	40.4	30.2	3.0	38.2	29.2	3.4	32.5	27.5	3.7	29.6	26.9	4.0	26.4	25.5	4.3
	67(19.4)	45.5	32.6	2.8	43.5	31.5	3.1	41.0	30.4	3.4	36.5	28.9	3.7	33.6	28.0	4.0	30.4	26.8	4.3
	72 (22.2)	49.6	26.1	2.8	47.4	24.9	3.1	44.8	24.0	3.4	38.3	22.3	3.7	35.0	21.6	4.0	31.3	20.1	4.3
1350 / .10	57 (13.8)	40.4	40.4	2.8	39.0	38.2	3.1	37.2	35.8	3.4	32.0	31.9	3.7	29.5	29.5	4.0	26.9	26.9	4.3
	62 (16.6)	40.8	38.8	2.8	39.0	37.9	3.1	37.2	35.8	3.4	32.0	31.9	3.7	29.5	29.5	4.0	26.9	26.9	4.3
	63*(17.2)	41.3	31.3	2.8	39.4	30.3	3.1	37.2	29.3	3.4	31.7	27.5	3.7	28.9	26.9	4.0	25.8	25.5	4.3
	67(19.4)	44.4	32.6	2.8	42.4	31.6	3.1	40.0	30.5	3.5	35.6	29.0	3.7	32.8	28.1	4.0	29.6	26.8	4.3
	72 (22.2)	48.4	26.1	2.9	46.2	24.9	3.1	43.7	24.0	3.5	37.4	22.3	3.8	34.1	21.6	4.0	30.5	20.1	4.4
1575 / .11	57 (13.8)	43.4	43.4	2.9	41.9	41.9	3.1	39.9	39.7	3.5	34.4	34.4	3.8	31.7	31.7	4.1	28.9	28.9	4.4
	62 (16.6)	43.8	43.5	2.9	41.9	41.9	3.1	39.9	39.7	3.5	34.4	34.4	3.8	31.7	31.7	4.1	28.9	28.9	4.4
	63*(17.2)	44.3	34.7	2.9	42.3	33.6	3.1	40.0	32.5	3.5	34.0	30.5	3.8	31.0	29.9	4.1	27.6	27.6	4.4
	67(19.4)	47.7	36.2	2.9	45.5	35.0	3.2	42.9	33.8	3.5	38.2	32.1	3.8	35.2	31.1	4.1	31.8	29.7	4.4
	72 (22.2)	51.9	28.9	2.9	49.6	27.6	3.2	46.9	26.6	3.6	40.1	24.7	3.8	36.6	23.9	4.1	32.7	22.3	4.4

See Legend and Notes on page 15.

Manufacturer reserves the right to change, at any time, specifications and designs without notice and without obligations.

Performance Data

48 Size

EVAPORATOR AIR		CONDENSER ENTERING AIR TEMPEREATURES °F (°C)																	
		75 (23.9)			85 (29.4)			95 (35)			105 (40.6)			115 (46.1)			125 (51.7)		
CFM /	EWB	Capacity MBtuh		Total	Capacity MBtuh		Total	Capacity MBtuh		Total	Capacity MBtuh		Total	Capacity MBtuh		Total	Capacity MBtuh		Total
BF	°F(°C)	Total	Sens	Sys KW	Total	Sens	Sys KW	Total	Sens	Sys KW	Total	Sens	Sys KW	Total	Sens	Sys KW	Total	Sens	Sys KW
1400 / .09	57 (13.8)	44.3	44.3	3.2	42.8	42.8	3.5	40.8	40.8	3.9	35.1	35.1	4.3	32.4	32.4	4.6	29.5	29.5	5.0
	62 (16.6)	46.0	42.6	3.2	44.0	41.5	3.5	41.9	39.3	3.9	36.1	34.9	4.3	33.3	32.7	4.6	30.4	29.8	5.0
	63*(17.2)	47.0	34.3	3.2	44.8	33.2	3.5	42.3	32.1	3.9	36.0	30.2	4.3	32.8	29.5	4.6	29.3	27.9	5.0
	67(19.4)	50.5	35.8	3.3	48.2	34.6	3.6	45.5	33.4	4.0	40.5	31.7	4.3	37.3	30.7	4.6	33.7	29.4	5.0
	72 (22.2)	55.0	28.6	3.3	52.6	27.3	3.6	49.7	26.3	4.0	42.5	24.4	4.4	38.8	23.7	4.7	34.7	22.1	5.0
1600 / .10	57 (13.8)	46.5	46.1	3.3	44.9	43.5	3.6	42.7	40.8	4.0	36.8	36.3	4.4	33.9	33.9	4.7	31.0	31.0	5.1
	62 (16.6)	47.0	44.2	3.3	44.9	43.1	3.6	42.8	40.8	4.0	36.8	36.3	4.4	33.9	33.9	4.7	31.0	31.0	5.1
	63*(17.2)	47.5	35.7	3.3	45.3	34.5	3.6	42.8	33.3	4.0	36.4	31.3	4.4	33.2	30.7	4.7	29.6	29.0	5.1
	67(19.4)	51.1	37.2	3.3	48.8	35.9	3.6	46.0	34.7	4.1	40.9	33.0	4.4	37.7	31.9	4.7	34.0	30.6	5.1
	72 (22.2)	55.7	29.7	3.4	53.1	28.4	3.7	50.3	27.3	4.1	43.0	25.4	4.4	39.2	24.6	4.7	35.1	22.9	5.1
1800 / .11	57 (13.8)	48.1	48.1	3.4	46.4	46.4	3.7	44.2	43.6	4.1	38.1	38.1	4.4	35.1	35.1	4.8	32.1	32.1	5.1
	62 (16.6)	48.6	47.7	3.4	46.4	46.1	3.7	44.3	43.6	4.1	38.1	38.1	4.4	35.1	35.1	4.8	32.1	32.1	5.1
	63*(17.2)	49.1	38.1	3.4	46.9	36.9	3.7	44.3	35.6	4.1	37.7	33.5	4.4	34.4	32.8	4.8	30.7	30.7	5.1
	67(19.4)	52.8	39.7	3.4	50.5	38.4	3.7	47.6	37.1	4.1	42.4	35.3	4.4	39.0	34.1	4.8	35.2	32.7	5.1
	72 (22.2)	57.6	31.8	3.4	55.0	30.3	3.7	52.0	29.2	4.2	44.5	27.1	4.5	40.6	26.3	4.8	36.3	24.5	5.2

See Legend and Notes on page 15.

Performance Data

60 Size

EVAPORATOR AIR		CONDENSER ENTERING AIR TEMPEREATURES °F (°C)																	
		75 (23.9)			85 (29.4)			95 (35)			105 (40.6)			115 (46.1)			125 (51.7)		
CFM /	EWB	Capacity MBtuh		Total	Capacity MBtuh		Total	Capacity MBtuh		Total	Capacity MBtuh		Total	Capacity MBtuh		Total	Capacity MBtuh		Total
BF	°F(°C)	Total	Sens	Sys KW	Total	Sens	Sys KW	Total	Sens	Sys KW	Total	Sens	Sys KW	Total	Sens	Sys KW	Total	Sens	Sys KW
1600 / .10	57 (13.8)	56.4	56.4	4.0	54.4	54.4	4.4	51.8	51.8	4.9	42.7	42.7	5.3	39.2	39.2	5.7	36.6	36.6	6.2
	62 (16.6)	58.6	52.1	4.0	55.9	50.8	4.4	53.3	48.1	4.9	43.9	40.1	5.3	40.3	39.5	5.7	37.6	35.9	6.2
	63*(17.2)	59.7	42.0	4.0	57.0	40.7	4.4	53.9	39.3	4.9	43.8	34.6	5.3	39.7	35.3	5.7	36.2	33.4	6.2
	67(19.4)	64.2	43.8	4.0	61.3	42.3	4.4	57.9	40.9	4.9	49.2	36.4	5.3	45.1	36.8	5.7	41.7	35.2	6.2
	72 (22.2)	70.0	35.0	4.1	66.8	33.5	4.5	63.2	32.2	5.0	51.6	28.0	5.4	46.9	28.4	5.8	42.9	26.4	6.2
1750 / .10	57 (13.8)	56.6	54.0	4.0	54.6	50.9	4.4	52.0	47.8	4.9	42.8	39.8	5.4	39.3	39.3	5.8	36.7	35.7	6.2
	62 (16.6)	57.2	51.8	4.0	54.6	50.5	4.4	52.1	47.8	4.9	42.8	39.8	5.4	39.3	39.3	5.8	36.7	35.7	6.2
	63*(17.2)	57.8	41.8	4.0	55.2	40.4	4.4	52.1	39.1	4.9	42.4	34.4	5.4	38.4	35.1	5.8	35.1	33.2	6.2
	67(19.4)	62.2	43.5	4.1	59.4	42.1	4.5	56.0	40.7	5.0	47.6	36.2	5.4	43.7	36.6	5.8	40.3	35.0	6.2
	72 (22.2)	67.8	34.8	4.1	64.7	33.3	4.5	61.2	32.0	5.0	50.0	27.9	5.4	45.4	28.2	5.8	41.5	26.2	6.3
2000 / .13	57 (13.8)	59.5	58.6	4.1	57.4	55.3	4.5	54.7	51.9	5.0	45.0	43.2	5.5	41.3	41.3	5.9	38.6	38.6	6.3
	62 (16.6)	60.1	56.8	4.1	57.4	54.9	4.5	54.8	51.9	5.0	45.0	43.2	5.5	41.3	41.3	5.9	38.6	38.6	6.3
	63*(17.2)	60.8	45.4	4.1	58.0	43.9	4.5	54.8	42.4	5.0	44.5	37.3	5.5	40.4	38.2	5.9	36.9	36.1	6.3
	67(19.4)	65.4	47.3	4.2	62.4	45.7	4.6	58.9	44.2	5.1	50.0	39.3	5.5	45.9	39.8	5.9	42.4	38.0	6.3
	72 (22.2)	71.2	37.8	4.2	68.0	36.1	4.6	64.4	34.8	5.1	52.6	30.3	5.5	47.8	30.6	5.9	43.7	28.5	6.4

See Legend and Notes on page 15.

Manufacturer reserves the right to change, at any time, specifications and designs without notice and without obligations.

Performance Data (Cont)

*At 75°F (24°C) entering dry bulb-Tennessee Valley Authority (TVA) rating conditions; all others at 80°F (26.7°C) dry bulb.

LEGEND
BF— Bypass Factor
edb— Entering Dry-Bulb
ewb— Entering Wet-Bulb
KW — Total Unit Power Input
rh—Relative Humidity

COOLING NOTES:
1. Ratings are net; they account for the effects of the evaporator-fan motor power and heat.
2. Direct interpolation is permissible. Do not extrapolate.
3. The following formulas may be used:

$$t_{ldb} = t_{edb} - \frac{\text{Sensible Capacity (Btuh)}}{1.09 \times \text{CFM}}$$

t_{lwb} = Wet-bulb temperature corresponding to enthalpy air leaving evaporator coil (h_{lwb})

$$h_{lwb} = h_{ewb} - \frac{\text{Total Capacity (Btuh)}}{(4.5 \times \text{CFM})}$$

Where: h_{ewb} = Enthalpy of air entering evaporator coil

4. The Sensible Capacity is based on 80° F (26.7°C) edb temperature of air entering evaporator coil. Below 80°F (26.7°C) edb, subtract (corr factor x cfm) from Sensible Capacity. Above 80°F (26.7°C) edb, add (corr factor x cfm) to Sensible Capacity.
Correction Factor = 1.09 x (1 - BF) x (t_{edb} - 80)

Multiplication Factors

HEATER KW RATING	VOLTAGE DISTRIBUTION V/3/60	MULTIPLICATION FACTOR
240	200	0.69
	208	0.75
	230	0.92
	240	1.00

Dry Coil Air Delivery* - Horizontal and Downflow Discharge Sizes 24-60

Unit Size	Motor Speed	Tap		ESP (in. W.C.)									
				0.1	0.2	0.3	0.4	0.5	0.6	0.7	0.8	0.9	1
24	Low	Blue	CFM	640	553	454	310	---	---	---	---	---	---
			BHP	0.07	0.08	0.08	0.09	---	---	---	---	---	---
	Med-Low	Pink	CFM	830	758	688	607	514	393	254	---	---	---
			BHP	0.12	0.13	0.13	0.13	0.14	0.14	0.15	---	---	---
	Medium**	Red	CFM	1080	1025	969	910	852	787	718	638	541	457
			BHP	0.21	0.22	0.23	0.23	0.24	0.24	0.25	0.25	0.26	0.27
	Med-High	Orange	CFM	1101	1046	993	936	878	816	749	676	599	498
			BHP	0.22	0.23	0.24	0.24	0.25	0.26	0.26	0.27	0.27	0.28
	High	Black	CFM	1222	1173	1123	1072	1021	967	912	853	787	712
			BHP	0.29	0.29	0.30	0.31	0.31	0.32	0.33	0.34	0.34	0.34
30	Low	Blue	CFM	643	552	455	348	225	---	---	---	---	---
			BHP	0.09	0.10	0.11	0.11	0.11	---	---	---	---	---
	Med-Low	Pink	CFM	817	744	673	597	516	431	325	190	---	---
			BHP	0.14	0.15	0.15	0.16	0.17	0.17	0.18	0.18	---	---
	Medium**	Red	CFM	1159	1104	1045	990	937	878	821	759	693	618
			BHP	0.31	0.32	0.33	0.33	0.34	0.35	0.36	0.37	0.37	0.38
	Med-High	Orange	CFM	1201	1147	1095	1037	987	934	877	818	755	671
			BHP	0.34	0.35	0.36	0.37	0.37	0.38	0.39	0.40	0.41	0.40
	High	Black	CFM	1291	1236	1181	1131	1080	1033	978	909	792	661
			BHP	0.41	0.42	0.43	0.43	0.44	0.45	0.46	0.45	0.43	0.40
36	Low	Blue	CFM	1096	1044	994	945	892	837	780	717	664	612
			BHP	0.14	0.15	0.16	0.18	0.19	0.19	0.20	0.21	0.22	0.23
	Med-Low	Pink	CFM	1151	1103	1056	1002	953	897	845	788	729	678
			BHP	0.16	0.17	0.18	0.19	0.20	0.21	0.22	0.23	0.24	0.25
	Medium**	Red	CFM	1299	1252	1204	1155	1106	1059	1007	959	905	844
			BHP	0.22	0.23	0.24	0.25	0.26	0.27	0.28	0.29	0.30	0.31
	Med-High	Orange	CFM	1382	1335	1292	1246	1202	1152	1106	1058	1007	957
			BHP	0.26	0.27	0.28	0.29	0.30	0.31	0.32	0.33	0.34	0.35
	High	Black	CFM	1530	1485	1442	1398	1354	1309	1263	1217	1169	1120
			BHP	0.33	0.35	0.36	0.37	0.38	0.39	0.40	0.41	0.42	0.43
42	Low	Blue	CFM	956	899	843	786	729	676	621	558	504	435
			BHP	0.13	0.13	0.14	0.15	0.16	0.16	0.17	0.18	0.18	0.19
	Med-Low	Pink	CFM	1201	1153	1107	1060	1012	965	917	871	828	782
			BHP	0.21	0.22	0.22	0.23	0.24	0.25	0.26	0.27	0.28	0.29
	Medium**	Red	CFM	1443	1402	1361	1322	1284	1243	1204	1164	1124	1084
			BHP	0.32	0.33	0.34	0.35	0.36	0.37	0.38	0.39	0.40	0.42
	Med-High	Orange	CFM	1529	1491	1451	1411	1376	1338	1300	1261	1223	1185
			BHP	0.37	0.39	0.40	0.41	0.42	0.43	0.44	0.45	0.46	0.47
	High	Black	CFM	1604	1565	1529	1490	1455	1421	1385	1348	1310	1274
			BHP	0.42	0.44	0.45	0.46	0.47	0.48	0.49	0.50	0.51	0.52
48	Low	Blue	CFM	641	551	462	385	289	216	163	115	---	---
			BHP	0.05	0.06	0.06	0.07	0.07	0.08	0.08	0.09	---	---
	Med-Low	Pink	CFM	1437	1395	1351	1307	1265	1221	1176	1132	1084	1039
			BHP	0.29	0.30	0.31	0.32	0.33	0.34	0.35	0.36	0.37	0.38
	Medium**	Red	CFM	1771	1735	1699	1664	1627	1592	1557	1522	1486	1450
			BHP	0.51	0.52	0.53	0.55	0.56	0.57	0.58	0.59	0.61	0.62
	Med-High	Orange	CFM	1928	1897	1862	1830	1796	1764	1732	1698	1620	1512
			BHP	0.64	0.65	0.67	0.68	0.69	0.71	0.72	0.73	0.71	0.66
	High	Black	CFM	2212	2167	2124	2061	1976	1892	1794	1699	1567	1438
			BHP	0.97	0.99	1.00	0.97	0.95	0.91	0.86	0.82	0.77	0.71
60	Low	Blue	CFM	641	551	462	385	289	216	163	115	---	---
			BHP	0.05	0.06	0.06	0.07	0.07	0.08	0.08	0.09	---	---
	Med-Low	Pink	CFM	1437	1395	1351	1307	1265	1221	1176	1132	1084	1039
			BHP	0.29	0.30	0.31	0.32	0.33	0.34	0.35	0.36	0.37	0.38
	Medium**	Red	CFM	1914	1881	1848	1814	1780	1748	1716	1681	1619	1512
			BHP	0.62	0.64	0.65	0.67	0.68	0.69	0.71	0.72	0.71	0.66
	Med-High	Orange	CFM	1928	1897	1862	1830	1796	1764	1732	1698	1620	1512
			BHP	0.64	0.65	0.67	0.68	0.69	0.71	0.72	0.73	0.71	0.66
	High	Black	CFM	2212	2167	2124	2061	1976	1892	1794	1699	1567	1438
			BHP	0.97	0.99	1.00	0.97	0.95	0.91	0.86	0.82	0.77	0.71

Shaded areas indicate speed/static combinations that are not permitted for dehumidification speed.

* Air delivery values are without air filter and are for dry coil (See Wet Coil Pressure Drop Table).
** Factory-shipped cooling speed
"High Static Cooling" = Only to be used for cooling function (not allowed for heating function)
NOTE: Deduct field-supplied air filter pressure drop and wet coil pressure drop to obtain static pressure available for ducting.

Wet Coil Pressure Drop (IN. W.C.)

Unit Size	Standard CFM (SCFM)																
	600	700	800	900	1000	1100	1200	1300	1400	1500	1600	1700	1800	1900	2000	2100	2200
24	0.03	0.04	0.04	0.05	0.06												
30				0.05	0.06	0.07	0.08	0.11									
36				0.02	0.03	0.03	0.04	0.05	0.05								
42					0.05	0.05	0.06	0.07	0.08	0.08	0.09	0.09	0.11				
48, 60									0.05	0.06	0.07	0.07	0.08	0.09	0.10	0.12	0.13

Horizontal and Downflow Filter Pressure Drop Table (IN. W.C.)

Filter Size in. (mm)	Cooling Tons	Standard CFM (SCFM)																
		600	700	800	900	1000	1100	1200	1300	1400	1500	1600	1700	1800	1900	2000	2100	2200
600-1400CFM 12x20x1+12x20x1 (305x508x25+305x508x25	2.0, 2.5	0.03	0.05	0.06	0.08	0.10	0.11	0.13	0.14	0.16	-	-	-	-	-	-	-	-
1200-1800 CFM 16x24x1+14x24x1 (406x610x25+356x610x25)	3.5	-	-	-	-	-	-	0.07	0.08	0.09	0.09	0.10	0.11	0.12	-	-	-	-
1100-2200 CFM 16x24x1+18x24x1 (406x610x25+457x610x25)	3.0 4.0 5.0	-	-	-	-	-	0.02	0.02	0.03	0.03	0.04	0.06	0.08	0.10	0.11	0.13	0.14	0.15

Economizer with 1-in. Filter Pressure Drop (IN. W.C.)

Filter Size in. (mm)	Cooling Tons	Standard CFM (SCFM)																
		600	700	800	900	1000	1100	1200	1300	1400	1500	1600	1700	1800	1900	2000	2100	2200
600-1400 CFM 12x20x1+12x20x1 (305x508x25+305x508x25)	2.0, 2.5	-	-	0.08	0.09	0.10	0.11	0.11	0.13	0.14	-	-	-	-	-	-	-	-
1200-1800CFM 16x24x1+14x24x1 (406x610x25+356x610x25)	3.5	-	-	-	-	-	0.09	0.09	0.10	0.12	0.13	0.15	0.17	0.17	0.19	0.21	-	-
1500-2200CFM 16x24x1+18x24x1 (406x610x25+457x610x25)	3.0, 4.0, 5.0	-	-	-	-	-	-	-	-	-	0.15	0.17	0.18	0.20	0.21	0.22	0.23	0.23

Electric Heat Pressure Drop Tables (IN. W.C.)
Small Cabinet: 24-30

STATIC	STANDARD CFM (SCFM)											
	500	600	700	800	900	1000	1100	1200	1300	1400	1500	1600
5 kW	0.00	0.00	0.00	0.00	0.00	0.00	0.00	0.00	0.02	0.04	0.06	0.07
10 kW	0.00	0.00	0.00	0.00	0.00	0.02	0.04	0.06	0.07	0.09	0.10	0.11
15 kW	0.00	0.00	0.00	0.02	0.04	0.06	0.08	0.10	0.12	0.14	0.16	0.18
20 kW	0.00	0.00	0.02	0.04	0.06	0.08	0.09	0.11	0.13	0.15	0.17	0.19

Large Cabinet: 36-60

STATIC	STANDARD CFM (SCFM)														
	1100	1200	1300	1400	1500	1600	1700	1800	1900	2000	2100	2200	2300	2400	2500
5 kW	0.00	0.00	0.00	0.01	0.02	0.03	0.04	0.05	0.06	0.07	0.08	0.09	0.10	0.11	0.12
10 kW	0.00	0.00	0.01	0.02	0.03	0.04	0.05	0.06	0.07	0.08	0.09	0.10	0.11	0.12	0.13
15 kW	0.00	0.02	0.03	0.04	0.05	0.06	0.07	0.08	0.09	0.10	0.11	0.12	0.13	0.14	0.15
20 kW	0.02	0.03	0.04	0.05	0.06	0.07	0.08	0.09	0.10	0.11	0.12	0.13	0.14	0.15	0.16

Manufacturer reserves the right to change, at any time, specifications and designs without notice and without obligations.

Typical Piping and Wiring

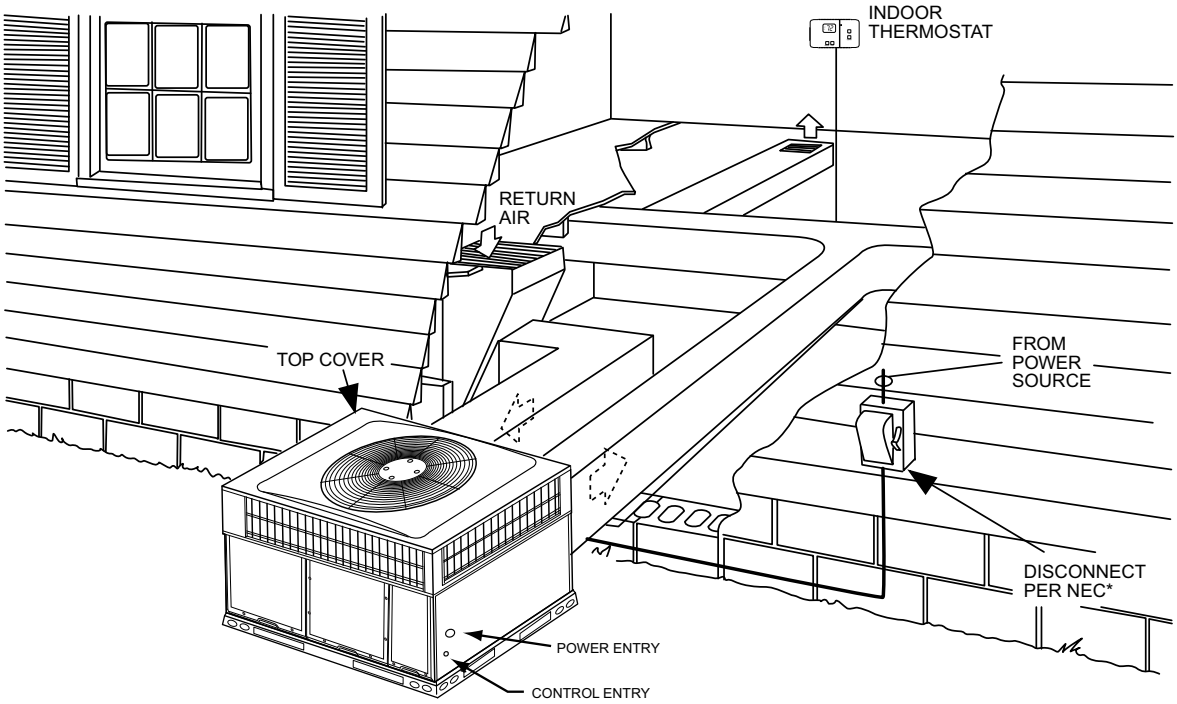

*NEC - National Electrical Code

A09240

Application Data

Condensate trap — A 2-in. (50.8 mm) condensate trap must be field supplied.

Ductwork — Secure downflow discharge ductwork to roof curb. For horizontal discharge applications, attach ductwork to unit with flanges.

To convert a unit to downflow discharge — Units are equipped with factory-installed inserts in the downflow openings. Removal of the inserts is similar to removing an electrical knock-out.

Maximum cooling airflow — To minimize the possibility of condensate blow-off from the evaporator, airflow through the units should not exceed 450 cfm per ton.

Minimum cooling airflow — Minimum cooling airflow is 350 cfm per ton.

Minimum ambient cooling operation temperature — All standard units have a minimum ambient operating temperature of 40°F (4°C). With accessory low ambient temperature kit, units can operate at temperatures down to 0°F (-17°C).

Electrical Data

MODEL	NOMINAL V-PH-HZ	VOLTAGE RANGE		COMPRESSOR		OFM	IFM	NOMINAL ELECTRIC HEAT	POWER SUPPLY		
		MIN	MAX	RLA	LRA	FLA	FLA	KW	FLA	MCA	MOCP
24	208/230-1-60	197	253	9	63	0.72	3.9	-/-	-/-	15.9	20
								3.8/5	18.1/20.8	27.5/30.9	30/35
								5.4/7.2	25.9/30	37.3/42.4	40/45
								7.5/10	36.1/41.7	50/57	50/60
30	208/230-1-60	197	253	12.5	67	1.05	3.9	-/-	-/-	20.6	30
								3.8/5	18.1/20.8	27.5/30.9	30/35
								5.4/7.2	25.9/30	37.3/42.4	40/45
								7.5/10	36.1/41.7	50/57	50/60
								11.3/15	54.2/62.5	72.6/83	80/90
36	208/230-1-60	197	253	14.4	86	1.05	3.8	-/-	-/-	22.9	35
								3.8/5	18.1/20.8	27.4/30.8	35/35
								5.4/7.2	25.9/30	37.1/42.3	40/45
								7.5/10	36.1/41.7	49.9/56.9	50/60
								11.3/15	54.2/62.5	72.5/82.9	80/90
36	208/230-3-60	197	253	9	70	1.05	3.8	-/-	-/-	16.2	25
								3.8/5	10.4/12	17.8/19.8	25/25
								5.4/7.2	20.8/24.1	30.8/34.9	35/35
								11.3/15	31.2/36.1	43.8/49.9	45/50
36	460-3-60	414	506	4.1	39	0.53	1.2	-	-	6.8	15
								10	12	16.5	20
								15	18	24	25
42	208/230-1-60	197	253	14.8	109	1.05	5.8	-/-	-/-	25.4	40
								3.8/5	18.1/20.8	29.9/33.3	40/40
								5.4/7.2	25.9/30	39.6/44.8	40/45
								7.5/10	36.1/41.7	52.4/59.4	60/60
								11.3/15	54.2/62.5	75/85.4	80/90
								15/20	72.2/83.3	97.5/111.4	100/125
42	208/230-3-60	197	253	12.2	102.8	1.05	5.8	-/-	-/-	22.2	30
								3.8/5	10.4/12	22.2/22.3	30/30
								5.4/7.2	20.8/24.1	33.3/37.4	35/40
								11.3/15	31.2/36.1	46.3/52.4	50/60
								15/20	41.4/47.9	59/67.1	60/70
42	460-3-60	414	506	5.8	48.5	0.53	1.7	-	-	9.5	15
								10	12	17.1	20
								15	18	24.6	25
								20	24.1	32.3	35
48	208/230-1-60	197	253	19.4	102	1.05	6.9	-/-	-/-	32.3	50
								3.8/5	18.1/20.8	32.3/34.6	50/50
								5.4/7.2	25.9/30	41/46.1	50/50
								7.5/10	36.1/41.7	53.8/60.8	60/70
								11.3/15	54.2/62.5	76.4/86.8	80/90
								15/20	72.2/83.3	98.9/112.8	100/125
48	208/230-3-60	197	253	12	123	1.05	6.9	-/-	-/-	23	35
								3.8/5	10.4/12	23/23.6	35/35
								5.4/7.2	20.8/24.1	34.6/38.8	35/40
								11.3/15	31.2/36.1	47.6/53.8	50/60
								15/20	41.4/47.9	60.4/68.5	70/70
48	460-3-60	414	506	6.3	60	0.53	2.3	-	-	10.7	15
								10	12	17.9	20
								15	18	25.4	30
								20	24.1	33	35
60	208/230-1-60	197	253	22.6	148	1.05	6.9	-/-	-/-	36.3	50
								3.8/5	18.1/20.8	36.3/36/3	50/50
								5.4/7.2	25.9/30	41/46.1	50/50
								7.5/10	36.1/41.7	53.8/60.8	60/70
								11.3/15	54.2/62.5	76.4/86.8	80/90
								15/20	72.2/83.3	98.9/112.8	100/125
60	208/230-3-60	197	253	13.1	93	1.05	6.9	-/-	-/-	24.4	35
								3.8/5	10.4/12	24.4/24.4	35/35
								5.4/7.2	20.8/24.1	34.6/38.8	35/40
								11.3/15	31.2/36.1	47.6/53.8	50/60
								15/20	41.4/47.9	60.4/68.5	70/70
60	460-3-60	414	506	6.6	60	0.53	2.3	-	-	11.1	15
								10	12	17.9	20
								15	18	25.4	30
								20	24.1	33	35

Manufacturer reserves the right to change, at any time, specifications and designs without notice and without obligations.

Electrical Data (Continued)

LEGEND

FLA - Full Load Amps
IDM - Inducer Motor
IFM - Indoor Fan Motor
LRA -Locked Rotor Amps
MCA - Minimum Circuit Amps
MOCP - Maximum Over Current Protection
OFM - Outdoor Fan Motor
RLA - Rated Load Amps

NOTES:

1. In compliance with NEC (National Electrical Code) requirements for multimotor and combination load equipment (refer to NEC Articles 430 and 440), the overcurrent protective device for the unit shall be Power Supply fuse or circuit breaker.
2. Minimum wire size is based on 60 C copper wire. If other than 60 C wire is used, or if length exceeds wire length in table, determine size from NEC.
3. Unbalanced 3-Phase Supply Voltage
   Never operate a motor where a phase imbalance in supply voltage is greater than 2%. Use the following formula to determine the percentage of voltage imbalance

   % Voltage imbalance

   $$= 100 \times \frac{\text{max voltage deviation from average voltage}}{\text{average voltage}}$$

EXAMPLE: Supply voltage is 230-3-60.

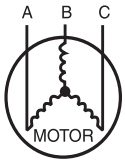

AB = 228 v
BC = 231 v
AC = 227 v

$$\text{Average Voltage} = \frac{228 + 231 + 227}{3} = \frac{686}{3} = 229$$

Determine maximum deviation from average voltage.
(AB) 229 - 228 = 1 v
(BC) 231 - 229 = 2 v
(AC) 229 - 227 = 2 v

Maximum deviation is 2 v.

Determine percent of voltage imbalance

$$\text{\% Voltage Imbalance} = 100 \times \frac{2}{229} = 0.8\%$$

This amount of phase imbalance is satisfactory as it is below the maximum allowable 2%.

IMPORTANT: If the supply voltage phase imbalance is more than 2%, contact your local electric utility company immediately.

A06564

Connection Wiring Schematic 208/230-1-60

CONNECTION WIRING DIAGRAM
DANGER: ELECTRICAL SHOCK HAZARD DISCONNECT POWER BEFORE SERVICING

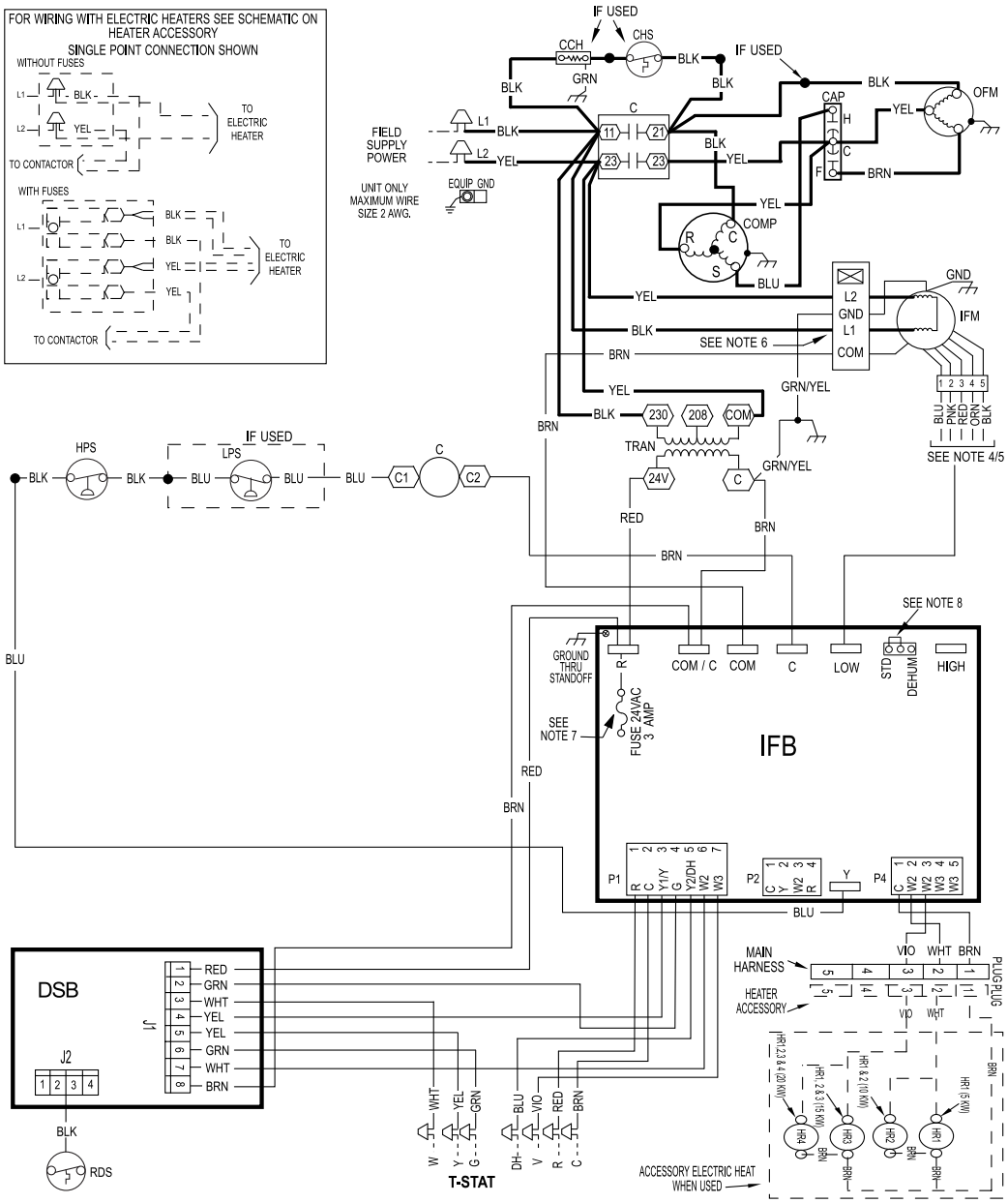

UNIT COMPONENT ARRANGEMENT

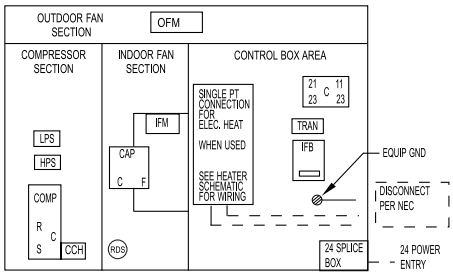

NOTES:

1. IF ANY OF THE ORIGINAL WIRES FURNISHED ARE REPLACED IT MUST BE REPLACED WITH THE SAME OR IT'S EQUIVALENT.
2. SEE PRE SALE LITERATURE FOR THERMOSTATS.
3. USE 75 DEGREES C COPPER CONDUCTORS FOR FIELD INSTALLATION.
4. REFER TO INSTALLATION INSTRUCTIONS FOR CORRECT SPEED SELECTION FOR IFM.
5. RELOCATION OF SPEED TAPS MAY BE REQUIRED WHEN USING FIELD INSTALLED ELECTRIC HEATERS. CONSULT INSTALLATION INSTRUCTIONS TO DETERMINE CORRECT SPEED TAP SETTING.
6. "DO NOT DISCONNECT PLUG UNDER LOAD".
7. THIS FUSE IS MANUFACTURED BY LITTLE FUSE, P/N 287003.
8. DEHUM FEATURE CANNOT BE USED WHEN ECONOMIZER IS INSTALLED. UNIT FACTORY-SHIPPED IN STD MODE.
9. N.E.C. CLASS 2, 24V.
10. CCH NOT USED ON ALL UNITS.

A240129

Ladder Wiring Schematic 208/230-1-60

LADDER WIRING DIAGRAM
DANGER: ELECTRICAL SHOCK HAZARD DISCONNECT POWER BEFORE SERVICING

LEGEND

△	FIELD SPLICE	⬭	SPLICE (MARKED)	– – –	ACCESSORY OR OPTIONAL WIRING	CCH	CRANKCASE HEATER
⬭	TERMINAL (MARKED)	——	FACTORY LOW VOLTAGE	▬▬	FACTORY HI VOLTAGE	CHS	CRANKCASE HEATER SWITCH
○	TERMINAL (UNMARKED)	– –	FIELD CONTROL WIRING	C	CONTACTOR	COMP	COMPRESSOR MOTOR
●	SPLICE	—–	FIELD POWER WIRING	CAP	CAPACITOR	CTD	COMPRESSOR TIME DELAY

DH	DEHUM	HR	HEATER RELAY	OFM	OUTDOOR FAN MOTOR
DSB	DISSIPATION BOARD	IFB	INDOOR FAN BOARD	RDS	REFRIG. DETECTION SENSOR
GND	GROUND	IFM	INDOOR FAN MOTOR	TRAN	TRANSFORMER
HPS	HIGH PRESSURE SWITCH	LPS	LOW PRESSURE SWITCH	T-STAT	THERMOSTAT

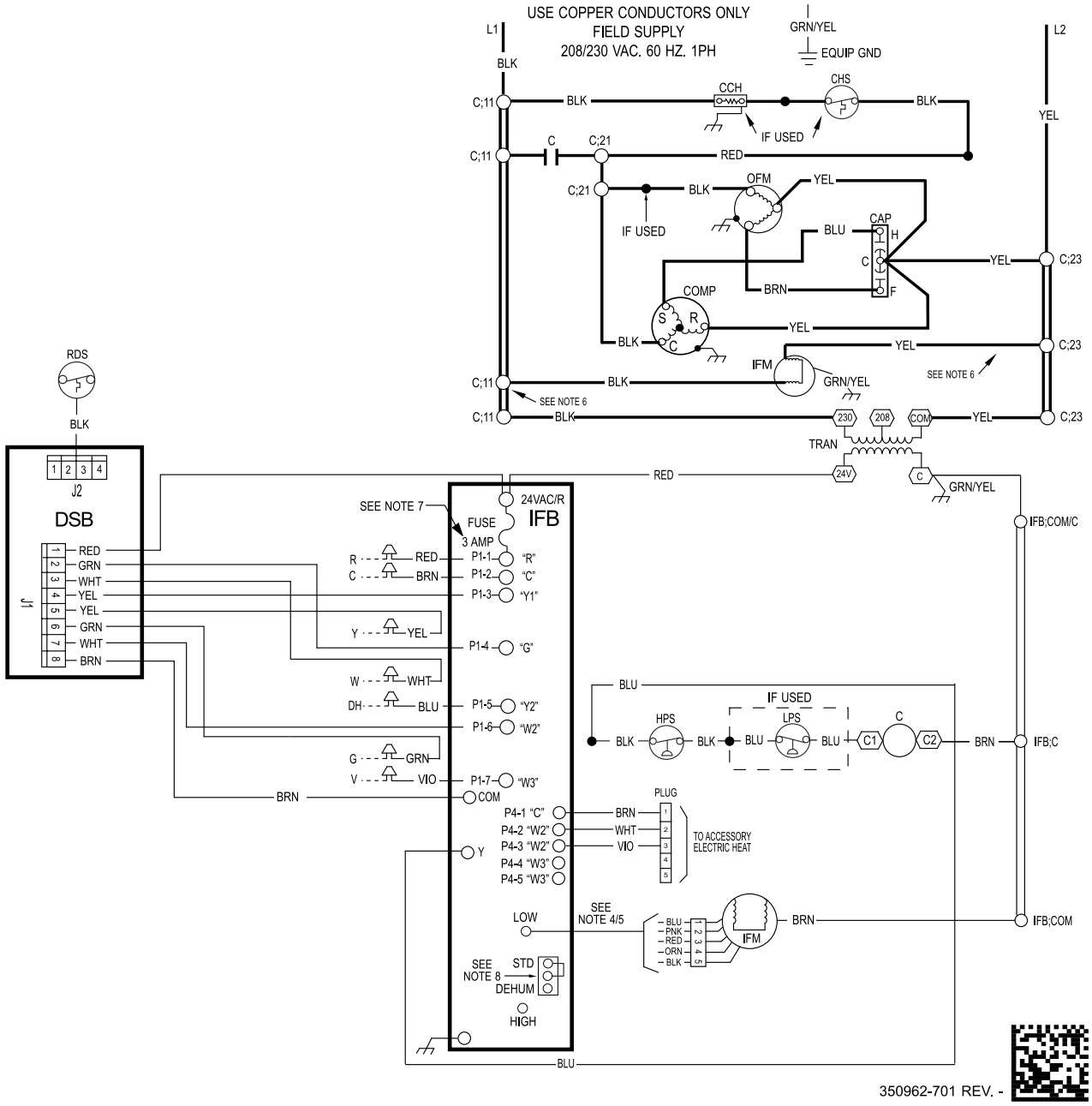

350962-701 REV. -

A240130

Connection Wiring Schematic 208/230-3-60

CONNECTION WIRING DIAGRAM
DANGER: ELECTRICAL SHOCK HAZARD DISCONNECT POWER BEFORE SERVICING

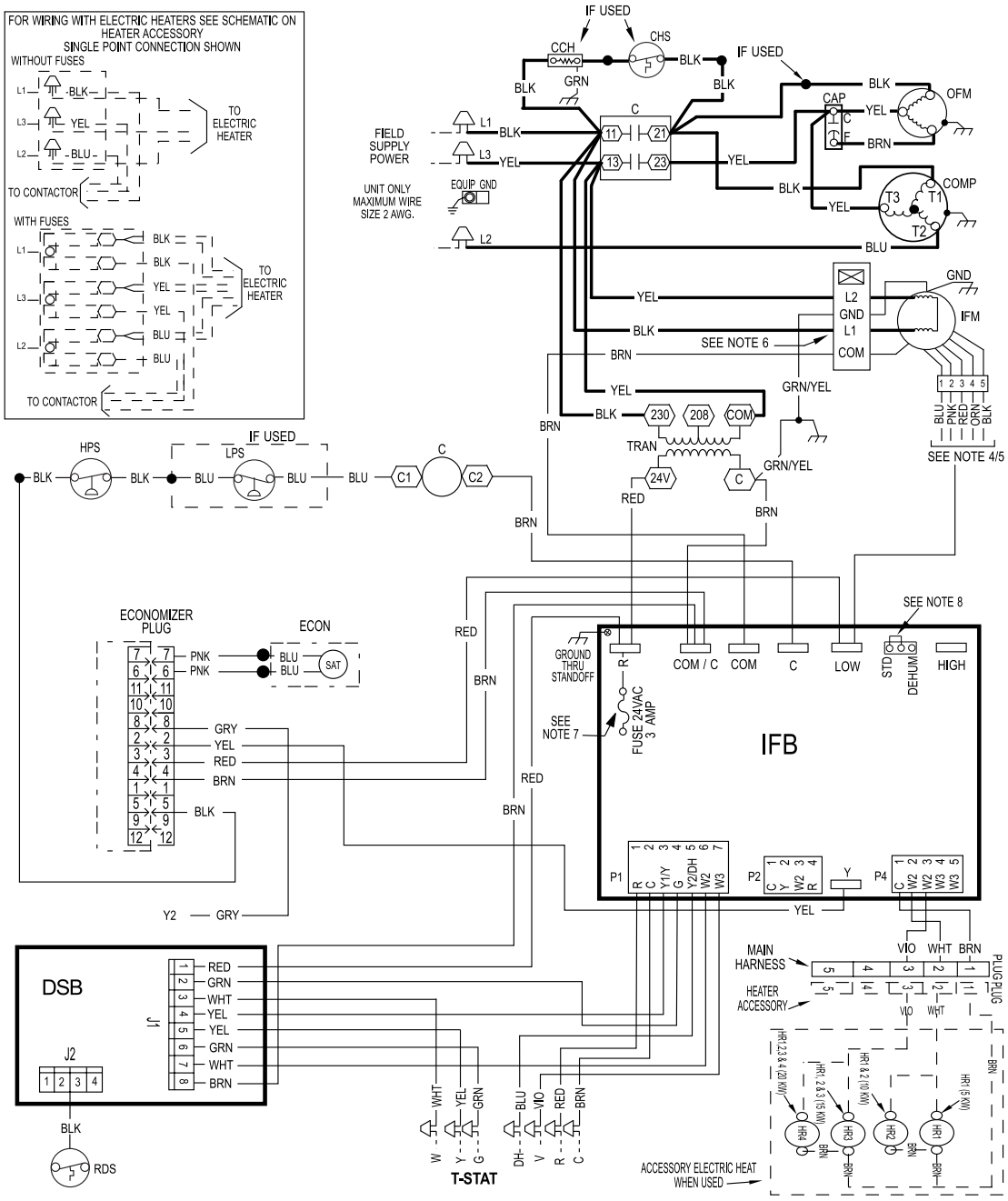

NOTES:

IF ANY OF THE ORIGINAL WIRES FURNISHED ARE REPLACED IT MUST BE REPLACED WITH THE SAME OR IT'S EQUIVALENT.

2. SEE PRE SALE LITERATURE FOR THERMOSTATS.
3. USE 75 DEGREES C COPPER CONDUCTORS FOR FIELD INSTALLATION.
4. REFER TO INSTALLATION INSTRUCTIONS FOR CORRECT SPEED SELECTION FOR IFM.
5. RELOCATION OF SPEED TAPS MAY BE REQUIRED WHEN USING FIELD INSTALLED ELECTRIC HEATERS. CONSULT INSTALLATION INSTRUCTIONS TO DETERMINE CORRECT SPEED TAP SETTING.
6. "DO NOT DISCONNECT PLUG UNDER LOAD".
7. THIS FUSE IS MANUFACTURED BY LITTLE FUSE, P/N 287003.
8. DEHUM FEATURE CANNOT BE USED WHEN ECONOMIZER IS INSTALLED. UNIT FACTORY-SHIPPED IN STD MODE.
9. N.E.C. CLASS 2, 24V.
10. CCH NOT USED ON ALL UNITS.

UNIT COMPONENT ARRANGEMENT

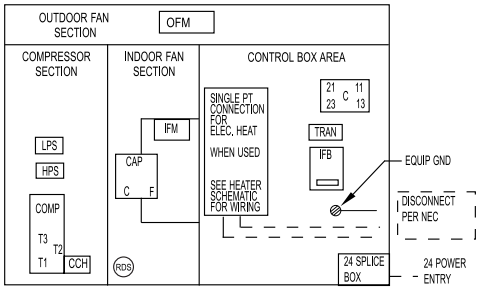

A240131

Ladder Wiring Schematic 208/230-3-60

LADDER WIRING DIAGRAM

DANGER: ELECTRICAL SHOCK HAZARD DISCONNECT POWER BEFORE SERVICING

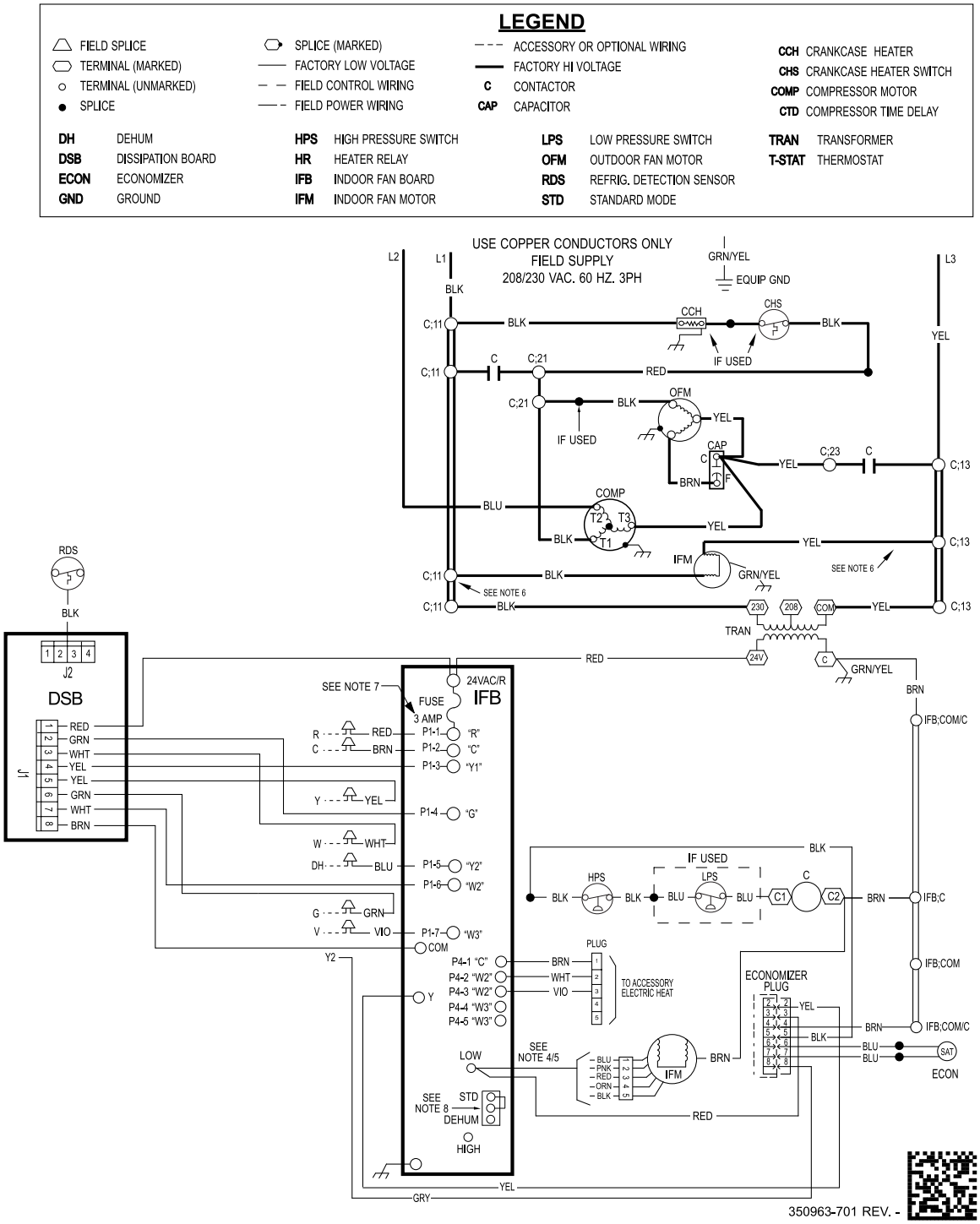

A240132

Connection Wiring Schematic 460-3-60

CONNECTION WIRING DIAGRAM
DANGER: ELECTRICAL SHOCK HAZARD DISCONNECT POWER BEFORE SERVICING

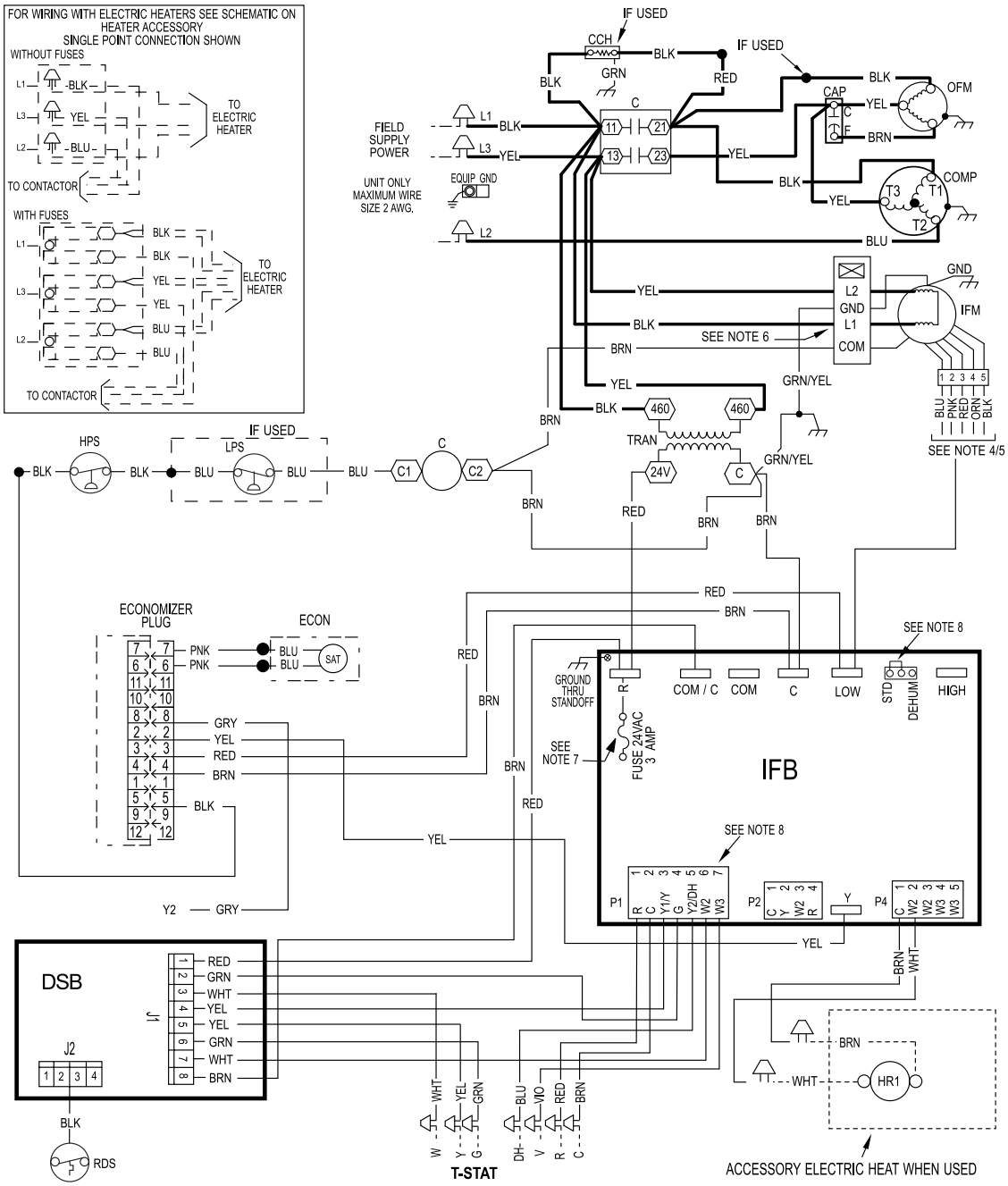

NOTES:

IF ANY OF THE ORIGINAL WIRES FURNISHED ARE REPLACED IT MUST BE REPLACED WITH THE SAME OR IT'S EQUIVALENT.

2. SEE PRE SALE LITERATURE FOR THERMOSTATS.
3. USE 75 DEGREES C COPPER CONDUCTORS FOR FIELD INSTALLATION.
4. REFER TO INSTALLATION INSTRUCTIONS FOR CORRECT SPEED SELECTION FOR IFM.
5. RELOCATION OF SPEED TAPS MAY BE REQUIRED WHEN USING FIELD INSTALLED ELECTRIC HEATERS. CONSULT INSTALLATION INSTRUCTIONS TO DETERMINE CORRECT SPEED TAP SETTING.
6. "DO NOT DISCONNECT PLUG UNDER LOAD".
7. THIS FUSE IS MANUFACTURED BY LITTLE FUSE, P/N 287003.
8. DEHUM FEATURE CANNOT BE USED WHEN ECONOMIZER IS INSTALLED. UNIT FACTORY-SHIPPED IN STD MODE.
9. N.E.C. CLASS 2, 24V.
10. CCH NOT USED ON ALL UNITS.

UNIT COMPONENT ARRANGEMENT

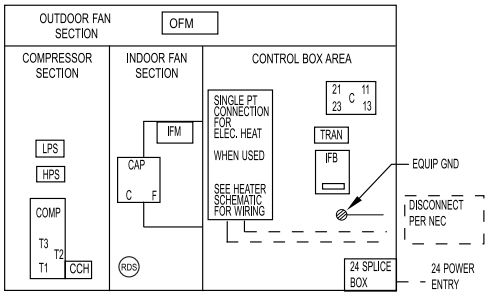

A240133

Ladder Wiring Schematic 460-3-60

LADDER WIRING DIAGRAM
DANGER: ELECTRICAL SHOCK HAZARD DISCONNECT POWER BEFORE SERVICING

LEGEND

△	FIELD SPLICE	⬭	SPLICE (MARKED)	- - -	ACCESSORY OR OPTIONAL WIRING	CCH	CRANKCASE HEATER
⬭	TERMINAL (MARKED)	——	FACTORY LOW VOLTAGE	▬▬	FACTORY HI VOLTAGE	COMP	COMPRESSOR MOTOR
○	TERMINAL (UNMARKED)	– –	FIELD CONTROL WIRING	C	CONTACTOR	DH	DEHUM
●	SPLICE	—·—	FIELD POWER WIRING	CAP	CAPACITOR	DSB	DISSIPATION BOARD

ECON	ECONOMIZER	IFB	INDOOR FAN BOARD	RDS	REFRIG. DETECTION SENSOR
GND	GROUND	IFM	INDOOR FAN MOTOR	STD	STANDARD MODE
HPS	HIGH PRESSURE SWITCH	LPS	LOW PRESSURE SWITCH	TRAN	TRANSFORMER
HR	HEATER RELAY	OFM	OUTDOOR FAN MOTOR	T-STAT	THERMOSTAT

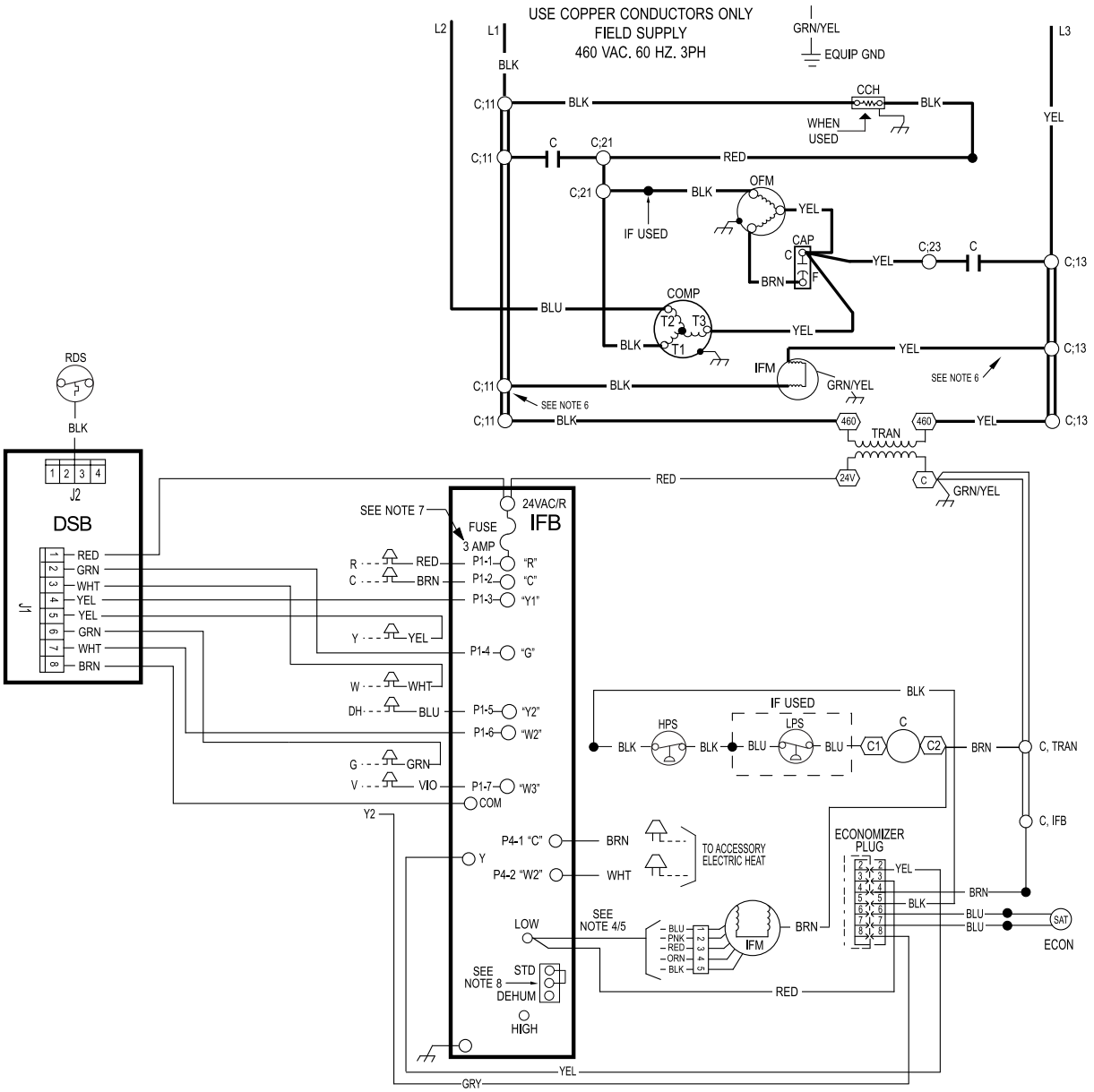

A240134

Controls

Operating Sequence

Cooling — When the system thermostat calls for cooling, 24 V is supplied to the “Y” and “G” terminals of the thermostat. This completes the circuit to the contactor coil (C) and indoor (evaporator) fan relay (IFR). The normally open contacts of energized C close and complete the circuit through compressor motor (COMP) to outdoor (condenser) fan motor (OFM). Both motors start instantly. The set of normally open contacts of energized IFR close and complete the circuit through IFM. The IFM starts instantly.

On the loss of the thermostat call for cooling, 24 V is removed from both the “Y” and “G” terminals (provided the fan switch is in the “AUTO” position) de-energizing the compressor contactor and opening the contacts supplying power to compressor/OFM. After a 90-second delay, the IFM shuts off. If the thermostat fan selector switch is in the “ON” position, the IFM will run continuously.

Heating — If accessory electric heaters are installed, on a call for heat, circuit R-W is made through the thermostat contacts. Circuit R-G is made which energizes the IFR. If the heaters are staged, then the thermostat closes a second set of contacts (W2) when second stage is required. When thermostat is satisfied, contacts open, deenergizing the heater relay and the IFR.

Manufacturer reserves the right to change, at any time, specifications and designs without notice and without obligations.

Guide Specifications

Packaged Air Conditioner System
Constant Volume Application
HVAC Guide Specifications

Size Range:**2 to 5 Tons, Nominal Cooling**

Part 1 — General

SYSTEM DESCRIPTION

Outdoor rooftop mounted or ground mounted, electric cooling unit utilizing a hermetic scroll compressor for cooling duty. Unit shall discharge supply air vertically or horizontally as shown on contract drawings. Condenser fan/coil section shall have a draw-thru design with vertical discharge for minimum sound levels.

QUALITY ASSURANCE

- Unit shall be rated in accordance with AHRI Standards 210/240 and 270-1995.
- Unit shall be designed and certified in accordance with UL Standard 60335-2-40 and 60335-1.
- Unit shall be manufactured in a facility registered to ISO 9001 manufacturing quality standard.
- Roof curb shall be designed to conform to NRCA Standards.
- Insulation and adhesives shall meet NFPA 90A requirements for flame spread and smoke generation.
- Cabinet insulation shall meet ASHRAE Standard 62P.

DELIVERY, STORAGE AND HANDLING

Unit shall be stored and handled per manufacturer's recommendations.

Part 2 — Products

EQUIPMENT

General:

Factory-assembled, single-piece, heating and cooling unit. Contained within the enclosure shall be all factory wiring, piping, controls, refrigerant charge with R-454B refrigerant, and special features required prior to field start-up.

Unit Cabinet:

- Unit cabinet shall be constructed of phosphated, zinc-coated, pre-painted steel capable of with-standing 500 hours in salt spray.
- Normal service shall be through 3 removable cabinet panels.
- The unit shall be constructed on a rust proof unit base that has an externally trapped, integrated sloped drain.
- Evaporator fan compartment top surface shall be insulated with a minimum 1/2-in. (12.7 mm) thick, flexible fiberglass insulation, coated on the air side and retained by adhesive and mechanical means. The evaporator wall sections will be insulated with a minimum semi-rigid foil-faced board capable of being wiped clean. Aluminum foil-faced fiberglass insulation shall be used in the entire indoor air cavity section.
- Unit shall have a field-supplied condensate trap.

Fans:

- The evaporator fan shall be an ECM Motor.
- Fan wheel shall be made from steel, be double-inlet type with forward curved blades with corrosion resistant finish. Fan wheel shall be dynamically balanced.
- Condenser fan shall be direct drive propeller type with aluminum blades riveted to corrosion resistant steel spiders, be dynamically balanced, and discharge air vertically.

Compressor:

- Fully hermetic compressors with factory-installed vibration isolation.

Coils:

Indoor coils shall have aluminum plate fins mechanically bonded to seamless aluminum tubes with all joints brazed. Tube sheet openings shall be belled to prevent tube wear. Outdoor coil shall have aluminum fins with copper tubing.

Refrigerant Components:

Refrigerant expansion device shall be of the TXV (thermostatic expansion valve) or fixed orifice type.

Filters:

Filter section shall consist of field-installed, throwaway, 1-in. (25 mm) thick fiberglass filters of commercially available sizes.

Controls and Safeties:

- Unit controls shall be complete with a self-contained low voltage control circuit.
- Compressors shall incorporate a solid-state compressor protector that provides reset capability.

Operating Characteristics:

- Unit shall be capable of starting and running at 125°F (51°C) ambient outdoor temperature per maximum load criteria of AHRI Standard 210.
- Compressor with standard controls shall be capable of operation down to 40°F (4°C) ambient outdoor temperature.
- Units shall be provided with fan time delay to prevent cold air delivery before the heat exchanger warms up.
- Unit shall be provided with 60-second fan time delay after the thermostat is satisfied.

Electrical Requirements:

All unit power wiring shall enter the unit cabinet at a single location.

Motors:

- Compressor motors shall be of the refrigerant-cooled type with line-break thermal and current overload protection.
- All fan motors shall have permanently lubricated bearings, and inherent, automatic reset, thermal overload protection.

Accessory Kits:

- Compressor Start Kit (single phase units only):
  Shall provide additional starting torque for single-phase compressors.
- Thermostat:
  To provide for one-stage heating and cooling in addition manual or automatic changeover and indoor fan control.
- Crankcase Heater:
  Shall provide anti-floodback protection for low-load cooling applications.
- Economizer:
  (Horizontal - Field installed accessory)
  (Vertical - Field installed accessory)
  a. Economizer controls capable of providing free cooling using outside air.
  b. Equipped with low leakage dampers not to exceed 3% leakage, at 1.0 IN. W.C. pressure differential.
  c. Spring return motor shuts off outdoor damper on power failure.
- Electric Heaters:
  a. Electric heater shall be available as a field-installed option.
  b. Heater elements shall be open wire type, adequately supported and insulated with ceramic bushings.
  c. Electric heater packages must provide single point power connection capability.

Manufacturer reserves the right to change, at any time, specifications and designs without notice and without obligations.

Guide Specifications (Continued)

- Filter Rack Kit:
  Shall provide filter mounting for downflow applications. Offered as a field installed accessory.
- Flat Roof Curb:
  Curbs shall have seal strip and a wood nailer for flashing and shall be installed per manufacturer's instructions.
- Low Ambient Package:
  Pressure-based control to allow cooling operation down to 0°F (-17.7°C).
- Manual Outdoor Air Damper:
  Package shall consist of damper, birdscreen, and rainhood which can be preset to admit outdoor air for year-round ventilation.
- Square-To-Round Duct Transitions (24-48 size):
  Shall have the ability to convert the supply and return openings from rectangular to round.
- Louver Metal Outdoor Coil Grille
  Shall provide hail and vandalism protection.
- Low Pressure Switch
  Kit is designed for use when a low pressure control is desired. This kit provides added reliability for the compressor. Offered as a field installed accessory.

© 2025 Carrier. All rights reserved.

Manufacturer reserves the right to change, at any time, specifications and designs without notice and without obligations.