619K*C
Cassette Ductless Split System
Sizes 12 to 24

bryant®
Heating & Cooling Systems

Owner' s Manual

Puron™
the environmentally sound refrigerant

NOTE: Read the entire instruction manual before starting the installation.

NOTE TO EQUIPMENT OWNER:

Please read this Owner's Information Manual carefully before installing and using this appliance and keep this manual for future reference.

For your convenience, please record the model and serial numbers of your new equipment in the spaces provided. This information, along with the installation data and dealer contact information, will be helpful should your system require maintenance or service.

UNIT INFORMATION

Model # _____

Serial # _____

INSTALLATION INFORMATION

Date Installed _____

DEALERSHIP CONTACT INFORMATION

Company Name: _____

Address: _____

_____

Phone Number: _____

Technician Name: _____

_____

SAFETY CONSIDERATIONS

Installing, starting up, and servicing air-conditioning equipment can be hazardous due to system pressures, electrical components, and equipment location (roofs, elevated structures, etc.).

Only trained, qualified installers and service mechanics should install, start-up, and service this equipment.

Untrained personnel can perform basic maintenance functions such as cleaning coils. All other operations should be performed by trained service personnel.

When working on the equipment, observe precautions in the literature and on tags, stickers, and labels attached to the equipment.

Follow all safety codes. Wear safety glasses and work gloves. Keep quenching cloth and fire extinguisher nearby when brazing. Use care in handling, rigging, and setting bulky equipment.

Read these instructions thoroughly and follow all warnings or cautions included in literature and attached to the unit. Consult local building codes and National Electrical Code (NEC) for special requirements. Recognize safety information. This is the safety-alert symbol ⚠. When you see this symbol on the unit and in instructions or manuals, be alert to the potential for personal injury.Understand these signal words: DANGER, WARNING, and CAUTION. These words are used with the safety-alert symbol. DANGER identifies the most serious hazards which **will** result in severe personal injury or death. WARNING signifies hazards which **could** result in personal injury or death. CAUTION is used to identify unsafe practices which **may** result in minor personal injury or product and property damage. NOTE is used to highlight suggestions which **will** result in enhanced installation, reliability, or operation.

⚠ WARNING

ELECTRICAL SHOCK HAZARD

Failure to follow this warning could result in personal injury or death.

Before installing, modifying, or servicing system, main electrical disconnect switch must be in the OFF position. There may be more than 1 disconnect switch. Lock out and tag switch with a suitable warning label.

⚠ WARNING

EXPLOSION HAZARD

Failure to follow this warning could result in death, serious personal injury, and/or property damage.

Never use air or gases containing oxygen for leak testing or operating refrigerant compressors. Pressurized mixtures of air or gases containing oxygen can lead to an explosion.

⚠ CAUTION

EQUIPMENT DAMAGE HAZARD

Failure to follow this caution may result in equipment damage or improper operation.

Do not bury more than 36 in. (914 mm) of refrigerant pipe in the ground. If any section of pipe is buried, there must be a 6 in. (152 mm) vertical rise to the valve connections on the outdoor units. If more than the recommended length is buried, refrigerant may migrate to the cooler buried section during extended periods of system shutdown. This causes refrigerant slugging and could possibly damage the compressor at start-up.

SYSTEM REQUIREMENTS

Allow sufficient space for airflow and servicing unit. See Fig. 1 for minimum required distances between unit and walls or ceilings.

Recommended Connection Method for Power and Communication Wiring (To minimize communication wiring interference)

Power Wiring:

The main power is supplied to the outdoor unit. The field supplied connecting cable from the outdoor unit to indoor unit consists of three (3) wires and provides the power for the indoor unit. Two wires are high voltage AC power and one is a ground wire.

Consult your local building codes and the NEC (National Electrical Code) or CEC (Canadian Electrical Code) for special requirements.

All wires must be sized per NEC or CEC and local codes. Use Electrical Data table MCA (minimum circuit amps) and MOCP (maximum over current protection) to correctly size the wires and the disconnect fuse or breakers respectively.

Per caution note, only copper conductors with a minimum 300 volt rating and 2/64-inch thick insulation must be used.

Communication Wiring:

A separate shielded copper conductor only, with a minimum 300 volt rating and 2/64-inch thick insulation, must be used as the communication wire from the outdoor unit to the indoor unit.

To minimize voltage drop of the control wire, use the following wire size and maximum lengths shown in the chart below:

Wire Size	Length ft (m)
18 AWG	50 (15)
16 AWG	50 (15) to 100 (30)

⚠ CAUTION

EQUIPMENT DAMAGE HAZARD

Failure to follow this caution may result in equipment damage or improper operation.

- Wires should be sized based on NEC and local codes.
- Use copper conductors only with a minimum 300 volt rating and 2/64 inch thick insulation.

User Notice

◆ When operating, the entire capacity of the cooperating indoor unit should be not larger than 150% of outdoor unit. Otherwise, it will cause the shortage of cooling (heating) capacity.

◆ A Breaker(or fuse) need to be installed in every indoor unit, and the capacity should in according with indoor unit's electrical parameter; all the indoor units are required to be centralized controlled by a total Switch, this Switch can cut off the electric power supply in case of emergency. The Breaker(or fuse) on each indoor units have the function of short circuit prevention and abnormal overload avoiding, it should be connected in normal situation. The total switch controlling the power supply of all the indoor units. Before clearing and maintenance job being carried out to the indoor units, it is very important to turn off the total power supply switch.

◆ In order to turn on the units successfully, the main power switch should be opened 8 hours before the operation.

◆ After receiving the turn off signal, every indoor unit will continue to work for 20-70sec to make use of the rest cool air or the rest heat air in the heat exchanger, while preparing for the next operation. And this is normal.

◆ When the selected operating mode of the indoor unit are clash with the operating mode of the outdoor unit, the malfunction light will blink after 5s on the indoor unit or remote controller showing that the operation clash, then the indoor unit will stop. At this time, change the operation mode of the indoor unit to the one that would not clash with the outdoor operating mode to make the operation normal. The cooling mode is not clash with the dry mode, while the fan mode is not clash with any mode.

◆ The appliance shall not be installed in the laundry.

◆ An all-pole disconnection switch having a contact separation of at least 3mm in all poles should be connected in fixed wiring.

◆ Information regarding transport/storage temperature (-13 -131°F/ -25~55°C) is missing.

◆ Main switch provided by end user: main switch handle should be black or gray, it can be locked in "OFF" position with padlock.

◆ The main disconnection device should be explained in user manual and the height should be recommended at 0.6-1.7m. over current protection is required(UL 1995,CSA C22.2).

◆ The cooling range of the unit is the outdoor environment temp.23-118.4°F(-5~48°C) DB, the heating range of the unit(only for the heat pump type unit) is the outdoor environment temp. 5-80.6°F(-15~27°C) WB.

This product must not be disposed together with the domestic waste. This product has to be disposed at an authorized place for recycling of electrical and electronic appliances.

Contents

Safety Information 1

Install of The Compact Panel Cassette Type Indoor Unit..... 2

Constitutes and Names of Parts of Compact Panel Cassette Type Indoor Unit..... 10

Working Temperature Range 11

Malfunction Debarring..... 12

Maintenance Method 14

Safety Information

Please read this manual carefully before use this unit, and operate it correctly according to the guide in this manual.

Please take specially note to the meaning of these two marks:

⚠ **Warning!:** This mark means that it may cause casualty or badly heart if the operation is incorrect.

⚠ **Note!:** This mark means that it may cause casualty or property loss if the operation is incorrect.

⚠ **Warning:**

◆ Do not adopt fuse with unsuitable capacity or adopt iron thread instead of fuse, otherwise malfunction or fire may happened.

◆ Cut down the main power switch immediately if malfunction (such as smell the burning odor etc.) happened.

◆ Maintain ventilation to prevent oxygen leakage in room.

◆ Don't insert finger or stick like things into discharge vent or outlet grill.

◆ Please make sure that the unit is installed in the place that can bear the weight of it adequately. If the place is not strong enough, the air conditioner may drop and cause casualty event.

◆ Don't spray or smear any oil paint or insecticide on the surface of unit, otherwise, fire may be leaded.

◆ Do not refit the conditioner. Please contact the agency or prefect ional personnel to repair or move the conditioner.

An all-pole disconnection switch having a contact separation of at least 3mm in all poles should be connected in fixed wiring.

⚠ **Note!:**

◆ Please check and make sure that the cord, drainage pipe and tubes are connected in the correct way to prevent leakage of water, refrigerant, electric shock or fire.

◆ The main power must connectable to the earth in order to assure the conditioner earthing effectively and to prevent electric shock. Please don't connect the earthing line with the gas pipe, water pipe, lightening rod or the connecting line of telephone.

◆ The air conditioner should be turned off at least after 5 mins' operation; otherwise it would affect the duration of the unit.

◆ Don't let the children operate the air conditioner.

◆ Please don't operate the unit by wet hand.

◆ Please turn off the main power of the unit before cleaning the conditioner or change the filter.

◆ Please cut off the main power if the conditioner will be used for a long time.

Install of The Compact Panel Cassette Type Indoor Unit

★ Schematic diagram of installation spaces

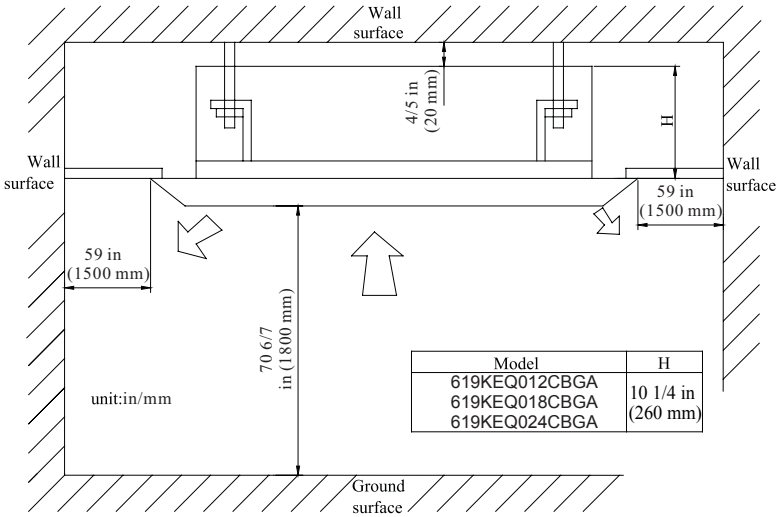

Model	H
619KEQ012CBGA 619KEQ018CBGA 619KEQ024CBGA	10 1/4 in (260 mm)

Fig.1

★ Select install location of the indoor unit

1. Obstruct should put away from the intake or outlet vent of the indoor unit so that the airflow can be blown though all the room.

2. Make sure that the installation had accord with the requirement of the schematic diagram of installation spaces.

3. Select the place where can stand 4 times of the weight of the indoor unit and would not increase the operating noise and oscillate.

4. The horizontally of the installation place should be guaranteed.

5. Select the place where easy drain condensated coagulated water, and easy connect with outdoor unit.

6. Make sure that there are enough space for care and maintenance. Make sure that the weight between the indoor unit and ground is above 70 6/7 in (1800 mm).

7. When installing the steeve bolt, check if the install place can stand the weight 4 times of the unit's. If not, reinforce before installation. (Refer to the install cardboard and find where should be reinforced)

⚠ **Note!**

There will be lots of lampblack and dust stick on the acentric, heat exchanger and water pump in dining room and kitchen, which would reduce the capacity of heat exchanger, lead water leakage and abnormal operation of the water pump. **The following treatment should be taken under this circumstance:**

1. Ensure that the smoke trap above cooker has enough capacity to obviate lampblack to prevent the indraft of the lampblack by the air conditioner.

2. Keep the air conditioner far from the kitchen so that the lampblack would not be indraft by the air conditioner.

★ Important notice:

◆ To guarantee the good performance, the unit must be installed by professional personnel according with this instruction.

Install of The Compact Panel Cassette Type Indoor Unit

★ Dimension of ceiling opening and location of the hoisting screw (M10)

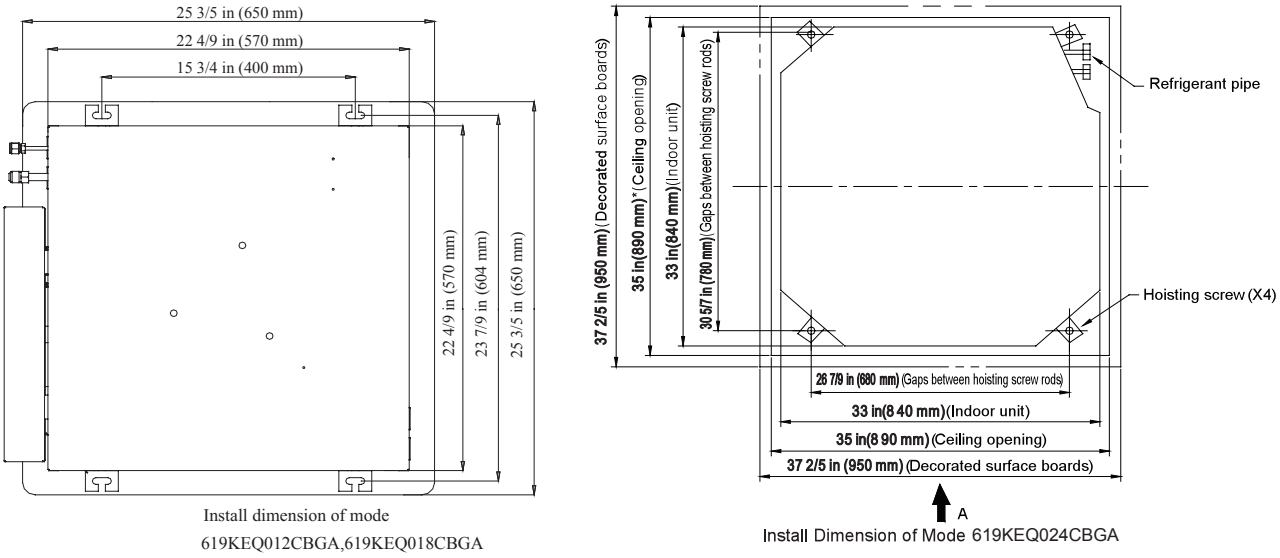

Fig.2

◆ The drilling of holes in the ceiling must be done by the professional personnel.

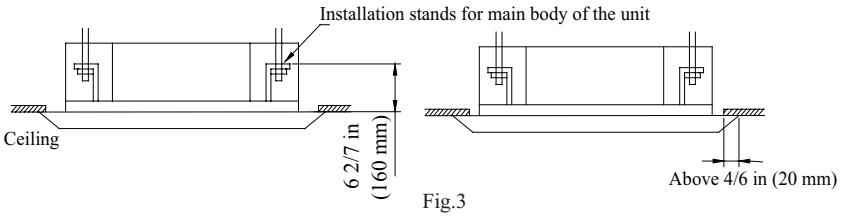

Fig.3

Notes: The dimension for the ceiling openings with * marks can be as large as 35 5/6 in (910 mm). But the overlapping sections of the ceiling and the decorated surface boards should be maintained at no less than 4/6 in (20 mm).

★ Main body of hoisting air conditioner

1 The primary step for install the indoor unit.

◆ When attach the hoisting stand on hoisting screw, do use nut and gasket individually at the upper and lower of the hoisting stand to fix it. The use of gasket anchor board can prevent gasket break off.

2 Use install cardboard.

◆ Please refer to the install cardboard about the dimension of ceiling opening.

◆ The central mark of the ceiling opening is marked on the install cardboard.

◆ Install the install cardboard on the unit by bolt (3 piece), and fix the angle of the drainage pipe at the outlet vent by bolt.

3 Adjust the unit to the suitable install place. (Refer to the fig.3)

4 Check if the unit is horizontal.

◆ Inner drainage pump and bobber switch are included in the indoor unit, check if 4 angle of every unit are horizontal by water lever. (If the unit is slant toward the opposite of the coagulate water flow, there may be malfunction of the bobber switch and lead water drop.)

5 Backout the gasket anchor board used to prevent gasket break off and tighten the nut on it.

6 Backout the install cardboard.

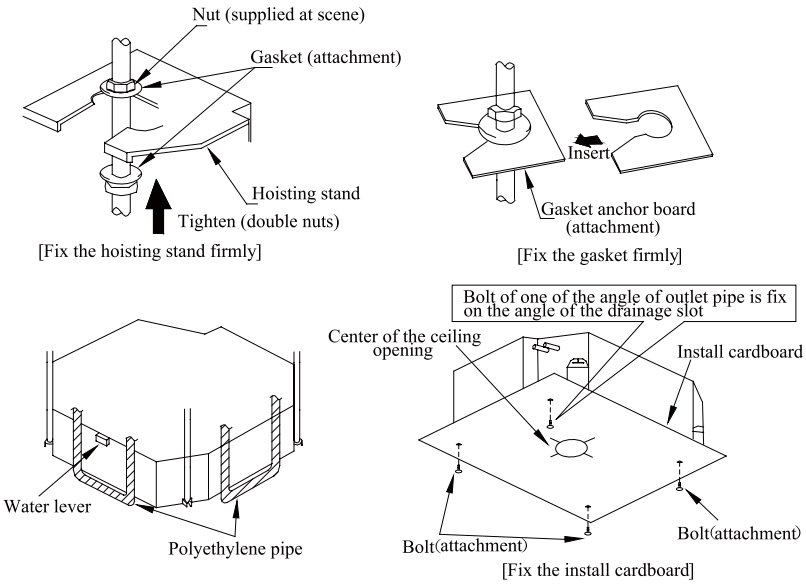

Fig.4

⚠ **Note!**

Please do tighten the nuts and bolts to prevent air conditioner break off.

★ **Connection of the refrigerant pipe**

◆ When connect the pipe to the unit or backout it from the unit, please do use both spanner and torque wrench. as shown in fig.5.

◆ When connect, smear both inside and outside of the flare nut with freeze motor oil, screw it by hand and then tighten it with spanner.

◆ Refer to form 1 to check if the wrench had been tightened (too tight would mangle the nut and lead leakage).

◆ Examine the connection pipe to see if it had gas leakage, then take the treatment of heat insulation, as shown in the fig.5.

◆ Only use median sponge to entwine the wiring interface of the gas pipe and heat preservation sheath of the gas collection tube.

Install of The Compact Panel Cassette Type Indoor Unit

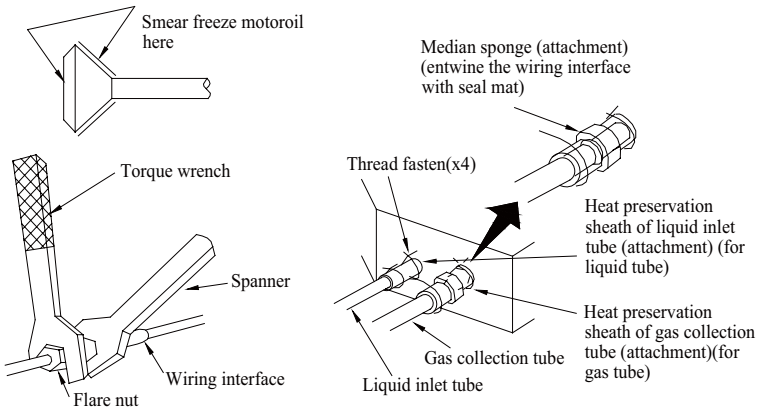

Fig.5

Form 1: The tightening torque needed for tightening nut

Diameter（Inch）	Surface thickness（in/mm）	Tightening torque
φ1/4”	⩾0.02 in (0.5 mm)	20.34~40.68 ft.lb(15~30 N.m)
φ3/8”	⩾0.03 in (0.71 mm)	40.68~54.24 ft.lb(30~40 N.m)
φ1/2”	⩾0.04 in (1 mm)	61.02~67.8 ft.lb(45~50 N.m)
φ5/8”	⩾0.04 in (1 mm)	81.36~88.14 ft.lb(60~65 N.m)
φ3/4”	⩾0.04 in (1 mm)	94.93~101.7 ft.lb(70~75 N.m)

★ **Drainage hose**

1. Install the drain hose

◆ The diameter of the drain hose should be equal or bigger than the connection pipe’s. (The diameter of polythene pipe: Outer diameter 1 in (25 mm) Surface thickness ⩾0.06 in (1.5 mm)

◆ Drain hose should be short and drooping gradient should at less 1/100 to prevent the formation of air bubble.

◆ If drain hose cannot has enough drooping gradient, drain raising pipe should be added.

◆ To prevent bent of the drain hose, the distance between hoisting stand should is 3.28 to 4.92 ft (1 to 1.5 m).

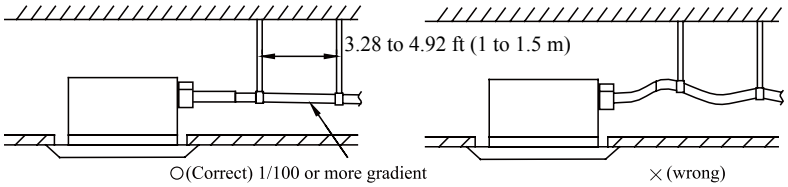

Fig.6

◆ Use the drain hose and clamp attached. Insert the drain hose to the drain vent, and then tighten the clamp.

◆ Entwine the big sponge on the clamp of drain hose to insulate heat.

◆ Heat insulation should be done to indoor drain hose.

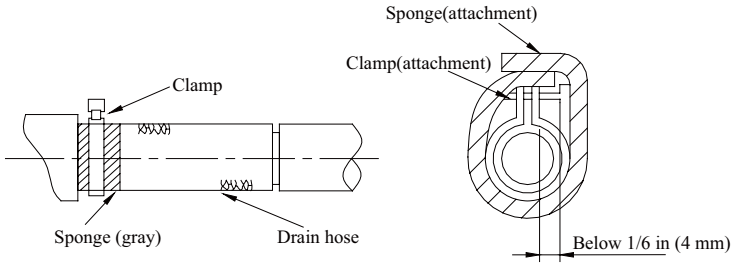

Fig.7

Drain stepup pipe note

◆ The install height of the drain raising pipe should less than 11 in (280 mm).

◆ The drain raising pipe should form a right angle with the unit, and distance to unit should not beyond 300mm.

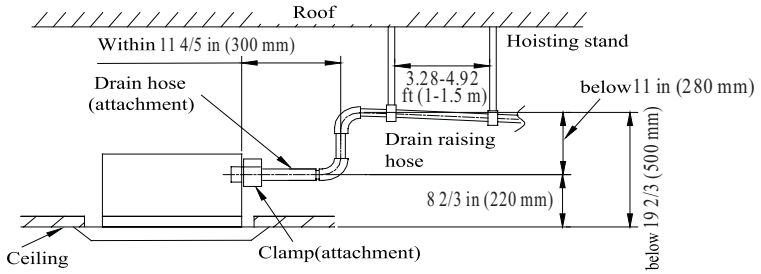

Fig.8

Instruction

◆ The slant gradient of the attached drain hose should be within 3 in (75 mm) so that the drain hole doesn't has to endure the unnecessary outside force.

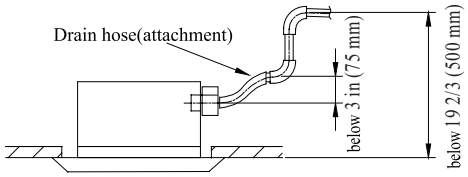

Fig.9

◆ Please install the drain hose according to the following process if several drain hoses join together.

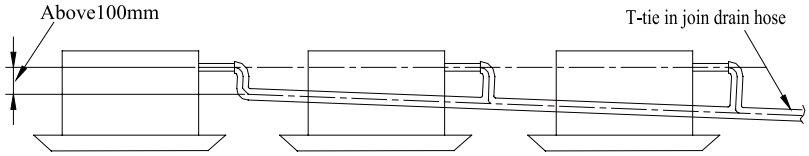

The specs of the selected join drain hose should fits the running capacity of the unit.

Fig.10

2 Check the smoothness of drain after installation.

◆ Check the drain state by immitting 36 3/5 in^3 (600 cc) water slowly from the outlet vent or test hole.

◆ Check the drain in the state of refrigerating after installation of the electric circuit.

Install of The Compact Panel Cassette Type Indoor Unit

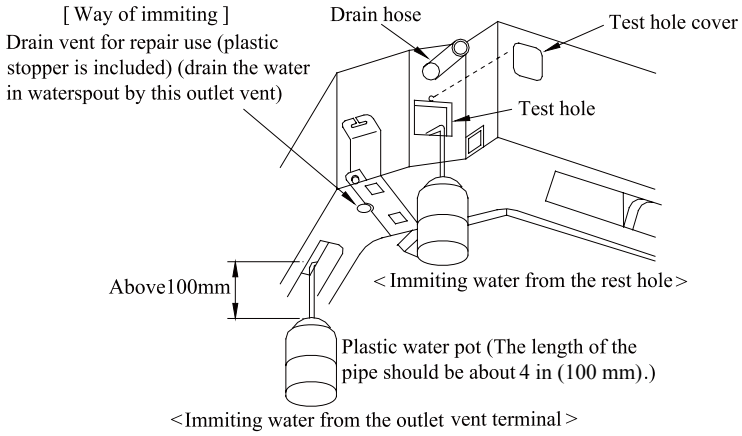

Fig.11

★ **Electrical wiring**

⚠ **Note:The power of the entire indoor unit must be connected in outdoor unit.**

◆ About the electrical wiring, please see the circuit diagram attached with the unit.

◆ All the installation of electrical wiring must be done by professional personnel.

◆ Please do take the earthing treatment.

Wiring method of connection unit and controller

◆ Connection wiring (communication):

① Open electric box cover, drag the wiring (communication)from the rubber plug A, and impact them well individually by impact fastener.

② Wiring according to the indoor side circuit diagram.

◆ Fix the impact fastener after connection.

◆ Entwine the small sponge on the electric wire(do entwine it to prevent condensation).

◆ Impact tightly by impact fastener after connection and then fit on the electric box.

◆ Connect the 3 cord rubber wire to the counter terminal of the 3 way terminal board.

The power cord reference Power cord standard recommending table

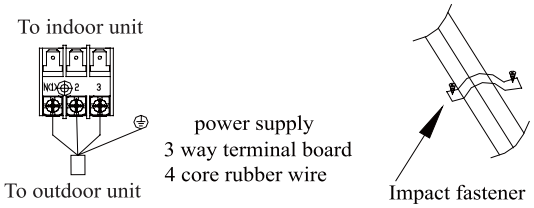

Fig.12

Power cord standard recommending table

Model	Power supply (V.Ph.Hz)	Min. Sectional Area of Earth Wire(AWG)	Min. Sectional Area of Power Cord(AWG)
619KEQ012CBGA	208~203V-1Ph-60Hz	UL1015 AWG 18*1	UL1015 AWG 18*3
619KEQ018CBGA	208~203V-1Ph-60Hz	UL1015 AWG 18*1	UL1015 AWG 18*3
619KEQ024CBGA	208~203V-1Ph-60Hz	UL1015 AWG 18*1	UL1015 AWG 18*3

★ Install the panel

1. Set the panel to the indoor unit body by matching the position of the swing flap motor of the panel to the piping position of the panel to the piping position of the indoor unit as shown by fig.13.

2. Install the panel

① Install the panel on the indoor unit temporarily. When install, hang the latch on the hook that is located on the opposite side of the swing flap on the panel of the indoor unit. (2 positions)

② Hang the remaining 2 latches to the hooks on the sides of the indoor unit.(Be careful not to let the swing motor lead wire get caught in the sealing material.)

③ Screw the 4 hexagon head screws under the latches in about 3/5 in (15 mm). (The panel would rise)

④ Adjust the panel by turning it toward the direction pointed by the arrow as shown in fig.13, so that the adjust board connect the ceiling well.

⑤ Tighten the screws until the thickness of the sealing material between panel and indoor unit reduced to 5-8mm.

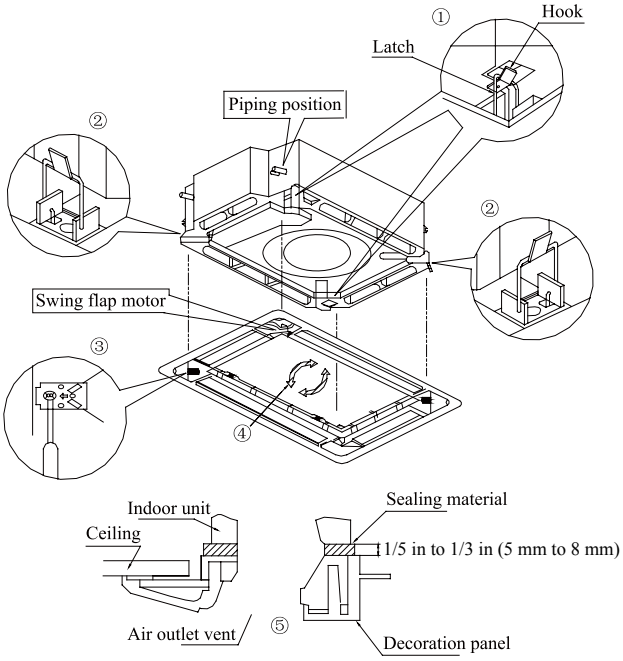

Fig.13

Notes:

1. Improper screwing of the screws may cause the troubles shown in fig.14.

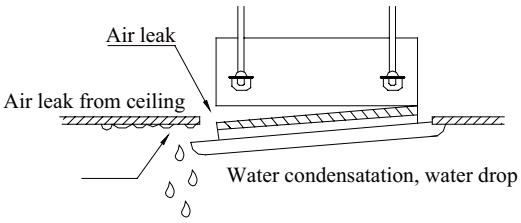

Fig.14

2. If gap still exist between ceiling and decoration panel after tightening the screws, readjust the height of the indoor unit. (As shown in fig.15)

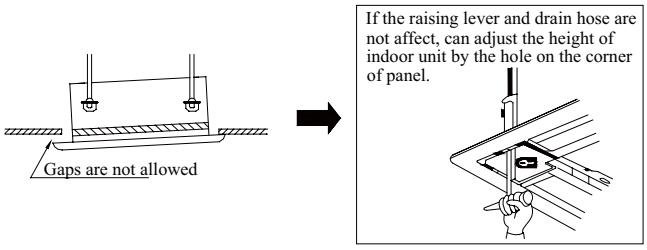

Fig.15

※ After fixing, be sure no gap left between the ceiling and the panel.

3. Wiring of the decoration panel (Fig.16)

Connect the joints for swing flap motor lead wire (at 2 places) installed on the panel.

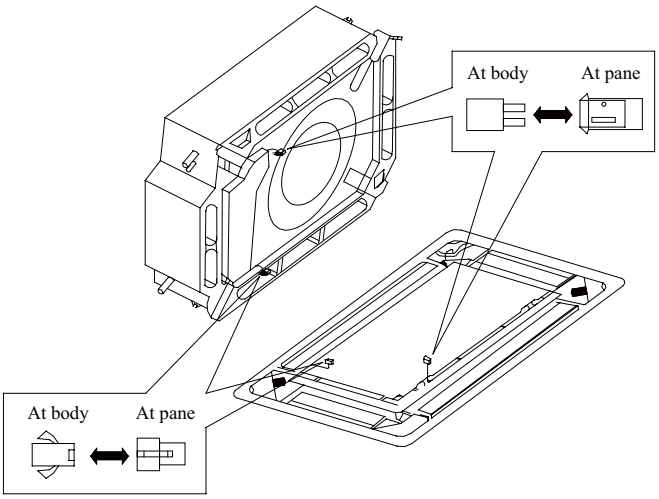

Fig.16

Constitutes and Names of Parts of Compact Panel Cassette Type Indoor Unit

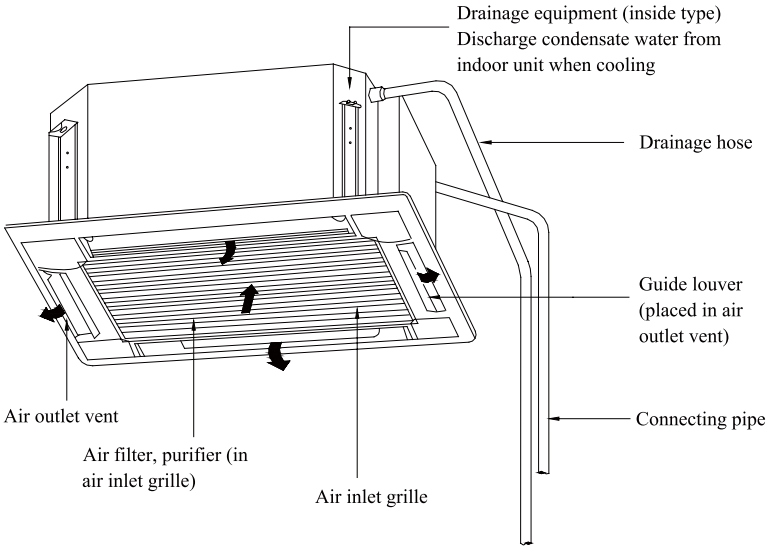

619KEQ012CBGA
619KEQ018CBGA
619KEQ024CBGA

Working Temperature Range

Working Temperature Range

	Indoor side state		Outdoor side stae	
	Dry bulb temp.	Wet bulb temp.	Dry bulb temp.	Wet bulb temp.
Rated Cooling	80.6°F(27°C)	66.2°F(19°C)	95°F(35°C)	75.2°F(24°C)
Max. cooling	89.6°F(32°C)	73.4°F(23°C)	118.4°F(48°C)	78.8°F(26°C)
Min. cooling	69.8°F(21°C)	59°F(15°C)	64.4°F(18°C)	—
Rated Heating	68°F(20°C)	59°F(15°C)	44.6°F(7°C)	42.8°F(6°C)
Max. heating	80.6°F(27°C)	—	75.2°F(24°C)	64.4°F(18°C)
Min. heating	68°F(20°C)	59°F(15°C)	5°F(-15°C)	3.2°F(-16°C)

Malfunction Debarring

⚠**Warning!**

◆ Cut down the main power switch immediately if malfunction (such as smell the burning odor etc.) happened, and then contact service center. If the abnormal state is maintained, the unit may be damaged or electric shock or fire may be happened.

◆ Do not refit the conditioner. Please contact service center to repair or move the conditioner.

★ Check the following items before contacting maintenance center

Phenomena	Reason	Remedial Measures
Air conditioner doesn't run at all	Blow of fuse or breaker	Change fuse or close breaker
	Power cut	Restart when there is power supply
	Don't connect with power	Connect power well
	Low batteries of wireless remote controller	Change new batteries
	Wireless remote controller exceed remote control area	Signal could be received within 8m
Air conditioner runs but stops immediately	Blockage in inlet or outlet vent of indoor or outdoor unit	Clean out blockage
Abnormal cooling or heating	Blockage in inlet or outlet vent of indoor or outdoor unit	Clean out blockage
	Improper of temp. setting	Adjust settings in wireless remote controller
	Low setting of fan speed	Adjust settings in wireless remote controller
	Incorrect of wind direction	Adjust settings in wireless remote controller
	Door or window opened	Close
	Direct sun burn	Hang curtain or jalousie before windows
	Too many people in room	
	Too many heater in room	
	Filter blocked by dirt	Clean filter

Malfunction Debarring

★ Instruction

If problem still cannot found out after above checking, please contact service center and instruct phenomena and model.

★ The following circumstance are not malfunction

"Malfunction"		Reason
Air conditioner doesn't run	Start up unit immediately after turned off	The overload protects switch makes it run after 3 minutes delay.
	When opening power	Run for about 1 minute without other actions
Mist is blown from air conditioner	When cooling	The high humidity air in room is cooled rapidly
Noise is heard from air conditioner	Slight click sound heard once begin running	Sound of initialization for electric expand valve
	Hissing sound heard continuously when cooling	The sound for gas refrigerant flowing in the unit
	Hissing sound heard when staring or stopping	The sound for gas refrigerant stops flow
	Slight hissing sound heard when running or after running	Sound for running of drainage system
	Creak sound heard when running or after running	The grating sound caused by expands of panel and other parts for the change of temperature
Dust be blown for air conditioner	Started up after long time's doesn't runs	Dust in indoor unit be blown out
Odor gives out from air conditioner	When running	This is because when air conditioning, odors or cigarette smoke from the room that was sucked in is discharged again.

★ After-sales Service

When having quality or other problems when purchasing air conditioner, please contact the local service center.

Maintenance Method

When air conditioner won't be used for a long time, please cut off the main power supply of air conditioner.

⚠**Warning!**

◆ Do turn off the unit and cut off the main power supply when cleaning the air conditioner, otherwise electric shock or harm may happen.

◆ It is forbidden to wash air conditioner by water rinsing, otherwise electric shock may happen.

★ Cleaning air filter

Air filters should be cleaned by professionals with proper operation to ensure personal safety.

When the usage environment has lots of dust, air filter should be cleaned more frequently (about once 6 months).

1. Open air inlet grille

Loosen two screws on the air inlet grille with a screwdriver. And pull the 2 handle on air inlet grille at the same time with the direction showed by arrow in fig.17, pull down slowly. (Reverse when closing)

2. Disassembly air filter

As shown in fig.18, pull the handle behind air inlet grille, raise it and disassembly. Then discharge the 3 purifier fixed on filter.

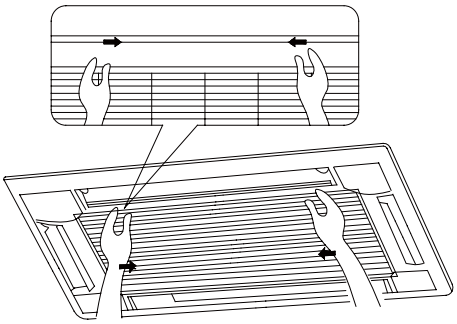

Fig.17

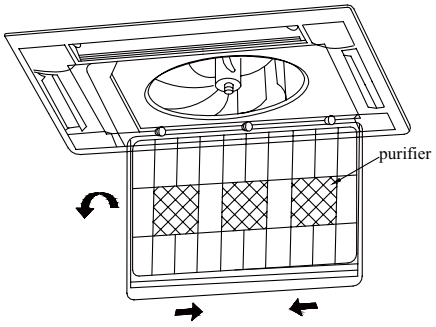

Fig.18

3. Clean

Adopts cleaner or water to wash filter; if the filter is too dirty (like oil stain on it), adopts warm water (lower than 113°F(45°C) with neutral scourer to clean it, then dry it in the shade.

⚠**Note !**

Do not clean the filter by hot water whose temp. is higher than 113°F(45°C) to prevent fade or deformation.

Do not burn it on fire or the filter would catches fire or deformation.

4. Install air filter

Fix the 3 purifiers on filter, install filter on the several bulges on top of air inlet grille, pull the handle behind air inlet grille toward inside to fix filter. As shown in fig.19.

5. Close air inlet grille (Refer to the 1st step)

Maintenance Method

Maintenance Method

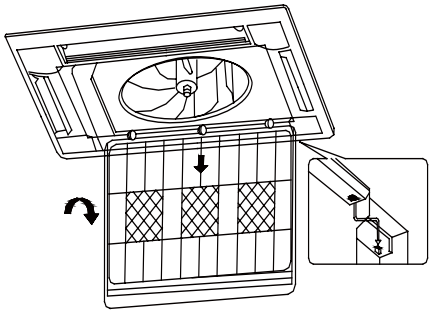

Fig.19

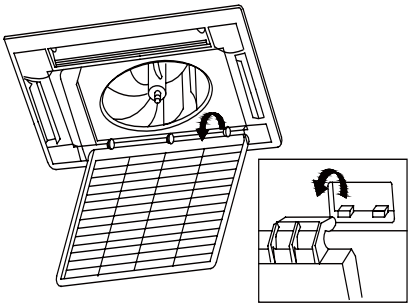

Fig.20

★ Clean air inlet grille

1. Open air inlet grille (the same with the 1st step of Clean Air Filter)
2. Take out air filter (the same with the 2nd step of Clean Air Filter)
3. Take out air inlet grille

Open air inlet grille for an angle of 45°, as shown in fig.20, rise it.

4. Clean

Clean it by pubescence brush, water and neutral cleaning, then throw water or dry it.

⚠**Note !**

Do not use water above 113°F(45°C) to wash the panel to prevent fade or deformation.

5. Install air inlet grille (refer to 3rd step)
6. Install air filter (refer to the 4th step of Clean Air Filter)
7. Close air inlet grille (refer to the 1st step)

★ Install and change of air purifier

1. Open air inlet grille (the same the 1st step of Clean Air Filter)
2. Disassembly purifier

As shown in fig.21, disassembly air filter, screw out fixing bolts fixed on purifier on filter, then purifier could be disassembly.

3. Take out the package sack of static fiber net filter, then install the filter in stand of purifier, and fix purifier on air filter.
4. Install air filter (the same with the 4th step of Clean Air Filter)

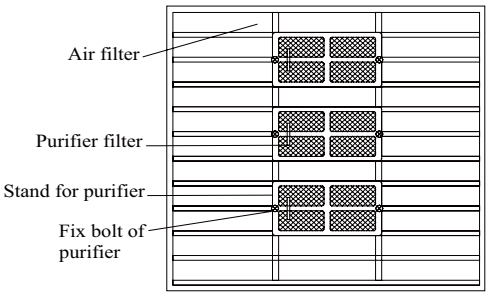

Fig.21

Function and usage period for air purifying

◆ Could adsorb CO, CO_2, benzene, aldehydes and odor of gasoline etc..

◆ Could adsorb deleterious material that is smaller than 1μm in air, as dust, pollen, bacteria, and virus.

◆ Usage period is 6 months to 1 year. If it is necessary to be changed, purchase new purifier in the nearest Gree special engaged maintenance center.

★ Clean Outlet vent and Surface Panel

◆ Clean the surface panel by soft dry cloth or wet cloth with neutral scourer.

◆ It is forbidden to clean surface panel by gasoline, benzene, diluents, cleansing powder etc..

◆ If the guide louver is too dirty, it may be removed to be cleaned. (As narrated below)

Disassembly and install of guide louver

1. Disassembly guide louver

Screw bolts in both end of guide louver to loose.

⚠**Note !**

Do not wipe guide louver powerfully when cleaning, otherwise fluff on surface would fall off.

2. Install guide louver

Rotate guide louver slightly could install the protruding edge of both end into grooves on both end of guide louver, and then tighten bolts.

★ Maintenance before or after usage season

Check before the usage season

◆ Check if there is blockage in inlet or outlet vent of air conditioner.

◆ Check if the earthing wire had earthed reliably.

◆ Check if the air filter had been installed well.

◆ In order to start up the air conditioner smoothly after long time's turned off, turn on the main power supply 8 hours before turning on the air conditioner.

Maintenance after usage season

◆ Clean filter and body of air conditioner.

◆ Cut off the main power supply of air conditioner.

◆ The cooling or heating capacity and sound level are tested before leaving factory.

◆ If the parameter changed, refer to the data offered on nameplate.

Copyright 2014 Bryant Heating & Cooling Systems • 7310 W. Morris St. • Indianapolis, IN 46231

Edition Date: 11/14

Catalog No: 619KC-01OM

Manufacturer reserves the right to change, at any time, specifications and designs without notice and without obligations.

Replaces: New

66129917027