FCMB4
Ion® Communicating Variable–Speed Fan Coil with R-410A Refrigerant
Sizes 24 thru 60

Product Data

A200369

PREMIUM ENVIRONMENTALLY RESPONSIBLE FAN COIL

The latest in technology makes the FCM fan coil models the most advanced air handlers available. With attention to quiet, efficient, and comfortable operation, ICP has developed a new benchmark for homeowner comfort and ease of installation.

The FCM utilizes the Ion Control as a required accessory to enable state of the art smart-diagnostics capability. This enables faster troubleshooting, providing ease of service and repair. The FCM also provides a 4-wire hook up with matching outdoor unit and the Ion Control. This makes installation simpler and a lot quicker than with conventional fan coils. The FCM has advanced technology that allows the fan coil to self-configure with a matching outdoor unit and the Ion Control, cutting down on installation time. Always update to the latest software version when installing the FCM fan coil.

The FCM features R-410A refrigerant, the chlorine-free alternate that is the future for the residential heating and cooling industry. The FCM using R-410A refrigerant maximizes performance for environmentally responsible systems. In addition to environmental safety, these systems are 30 to 40% more efficient than standard heating and cooling systems, thereby combining excellence in efficiency and environmental sustainability.

The FCM provides these benefits due to ICP's command of Electronically Commutating Motor (ECM) technology. These motors are extremely efficient at all speeds, and enable the FCM to operate at the correct speed to deliver airflow precisely, ensuring proper performance across a wide range of duct static pressures. This adaptive efficiency also makes installation quality easier to achieve for today's demanding homeowner.

ICP's command of ECM technology may be most evident in the comfort advantages that an ECM can deliver. For true comfort, the homeowner can achieve command of both temperature and humidity in cooling and heating modes.

Another feature which sets the FCM apart is the factory-installed TXV, which enhances efficiency and provides compressor-protecting operation at all recommended conditions. Grooved tubing, louvered aluminum fins, and the large face areas of the FCM refrigerant coils also provide superior efficiency, for high SEER2 and HSPF2 performance.

ICP leads the way in condensate control, a hallmark of these multipoise fan coils. All of these featured components are protected within a rugged, pre-painted metal cabinet lined with super-thick, high-density insulation. For neat, high quality installations, the unit exterior features sweat refrigerant connections for simple leak free performance, and multiple electrical entry for both high and low voltage service.

Assembled at the factory compliant with low leak requirements of less than 2% cabinet leakage rate at 1.0 inches W.C. and 1.4% cabinet leakage rate at 0.5 inches W.C. when tested in accordance with ASHRAE 193 standard..

FEATURES

Smart Diagnostics

- Self configuring (ease of installation)
- Easier troubleshooting, providing faster service and repair
- Energy Tracking capability with the Ion Wall Control. (Energy Tracking has the ability to monitor and estimate the energy consumption of your Ion system.)
- Compatibility with wall control depends on software version. Check the installation instructions for minimum requirements.

Environmentally Responsible Refrigerant Technology

- R-410A refrigerant – the chlorine-free, non-ozone depleting refrigerant
- Thermostatic Expansion Valve (TXV) designed to maximize performance with R-410A refrigerant. Bi-flow hard-shutoff with mechanical fittings

Energy Efficient Operation

- Electronically Commutated Motor (ECM) operates efficiently at all speeds
- Maximizes efficiency of heating and cooling systems
- Ultra-low power consumption during fan only operation

Comfort Control

- Warm, comfortable heating air temperatures
- Unmatched humidity control

Airflow and Sound Technology

- Logarithmic spiral blower housings for high blower efficiency and quiet operation
- Diffuser air discharge section for high airflow efficiency and quiet, smooth operation
- High duct static capability
- Design meets stringent regulations for cabinet air leakage of less than 2% cabinet leakage rate at 1.0 inches W.C. and 1.4% cabinet leakage rate at 0.5 inches W.C. when tested in accordance with ASHRAE 193 standard.

Condensate Control and Disposal Technology

- Minimal standing water - less microbial growth for improved IAQ and reduced condensate line clogging and related condensate leakage
- Condensate fittings relocated away from turbulent airflow patterns at the blower entrance for improved condensate control performance
- Overflow feature for slope coil units allows condensate to exit the unit without damage to product under clogged primary and secondary line conditions
- Tested for condensate disposal at conditions much more severe than those required by ARI
- Primary and secondary drain connections to comply with HUD
- All pans constructed of an injection molded glass-filled polycarbonate engineered resin material, with brass drain connections
- High density, super thick cabinetry insulation with vapor barrier
- Pre-painted galvanized sheet metal cabinet

Heat Transfer Technology

- Grooved tubing
- Lanced sine wave aluminum fins
- Discreet refined counterflow refrigerant circuitry
- Bi-flow hard-shutoff TXV metering device with mechanical fittings

Quality Assisting, Ease of Installation and Service Features

- Easy 4 wire hook up: convenient and reduces installation time.
- Multipoise unit
- Provision made for suspending from roof or ceiling joints
- Modular cabinet on sizes 36 through 60
- Sweat connections for leak free service
- Multiple electrical entry for application flexibility (high and low voltage)
- Low voltage terminal strip, to safely hold connections within the cabinet
- Cabinet construction features innovations designed to prevent cabinet sweating

Controls and Electrical Features

- Easy plug connection provided for quick installation of accessory heater packages
- 40VA 208/230v transformer
- Replaceable 3-amp blade-type auto fuse protects against transformer secondary short

Filter Features

- Factory supplied filter
- New standard sized filter rack fits most common size replacement filters

Warranty

- 10-year No Hassle Replacement limited warranty:
  - 10-year parts limited warranty with timely registration*. Equipment must be registered within 90 days of original installation, except in jurisdictions where warranty benefits cannot be conditioned on registration.

* Applies to original purchaser/homeowner and not available to subsequent owners, except in jurisdictions where laws dictate otherwise.

(See warranty certificate for complete details and restrictions.)

Table 1 – Models Available

2 Ton	3 Ton	4 Ton	5 Ton
FCMB4X24L0BA	FCMB4B36L0CA	FCMB4B48L0CA	FCMB4B60L0DA

Use of the AHRI Certified TM Mark indicates a manufacturer's participation in the program For verification of certification for individual products, go to www.ahridirectory.org.

ISO 9001
QMI-SAI Global

A230447

MODEL NUMBER NOMENCLATURE

1	2	3	4	5	6	7	8	9	10	11	12
F	C	M	B	4	X	2	4	L	0	B	A

Product

F = Fan Coil

Type

C = Ion Series, Variable Speed Constant Airflow (VCA) Motor

Position

M = Multipoise

Major Series

Refrigerant

4 = R410A

Metering Device

B = Modular (2-piece), TXV

X = Singular (1-piece), TXV

Capacity

24 = 24,000

36 = 36,000

48 = 48,000

60 = 60,000

Coil Type

L = Aluminum

Cabinet Width

B = 17"

C= 21"

D= 24"

Series Code

DIMENSIONS

UNIT	SERIES	ELECTRICAL CHARACTERSTICS				A	B	C	D	E	F	G	H	J	COIL CONFIGURATION		SHIPPING WT (LBS)
															SLOPE	"A"	
FCMB4X24	01	X	*			42 11/16"	17 5/8"	15 3/4"	15 5/8"	10 3/4"	18 9/16"	18 1/4"	-	-	-	X	124
FCMB4B36	01	X	*			53 7/16"	21 1/8"	19 1/4"	19 1/8"	19 3/16"	26 15/16"	27 1/2"	28 5/16"	19"	X	-	146
FCMB4B48	01	X	*			53 7/16"	21 1/8"	19 1/4"	19 1/8"	19 1/2"	27 1/4"	26 15/16"	28 5/16"	-	-	X	168
FCMB4B60	01	X	*			59 3/16"	24 11/16"	22 3/4"	22 11/16"	25 1/4"	32 15/16"	32 5/8"	34 1/16"	-	-	X	203
		208/230-1-60	208/230-3-60														

X=YES
O=NO
*=YES, DUE TO AVAILABLE FIELD INSTALLED HEATERS.

NOTE:

1. SERIES DESIGNATION IS THE 13TH & 14TH POSITIONS OF UNIT PRODUCT NUMBER.
2. ALL DIMENSIONS ARE IN "INCHES" UNLESS NOTED.

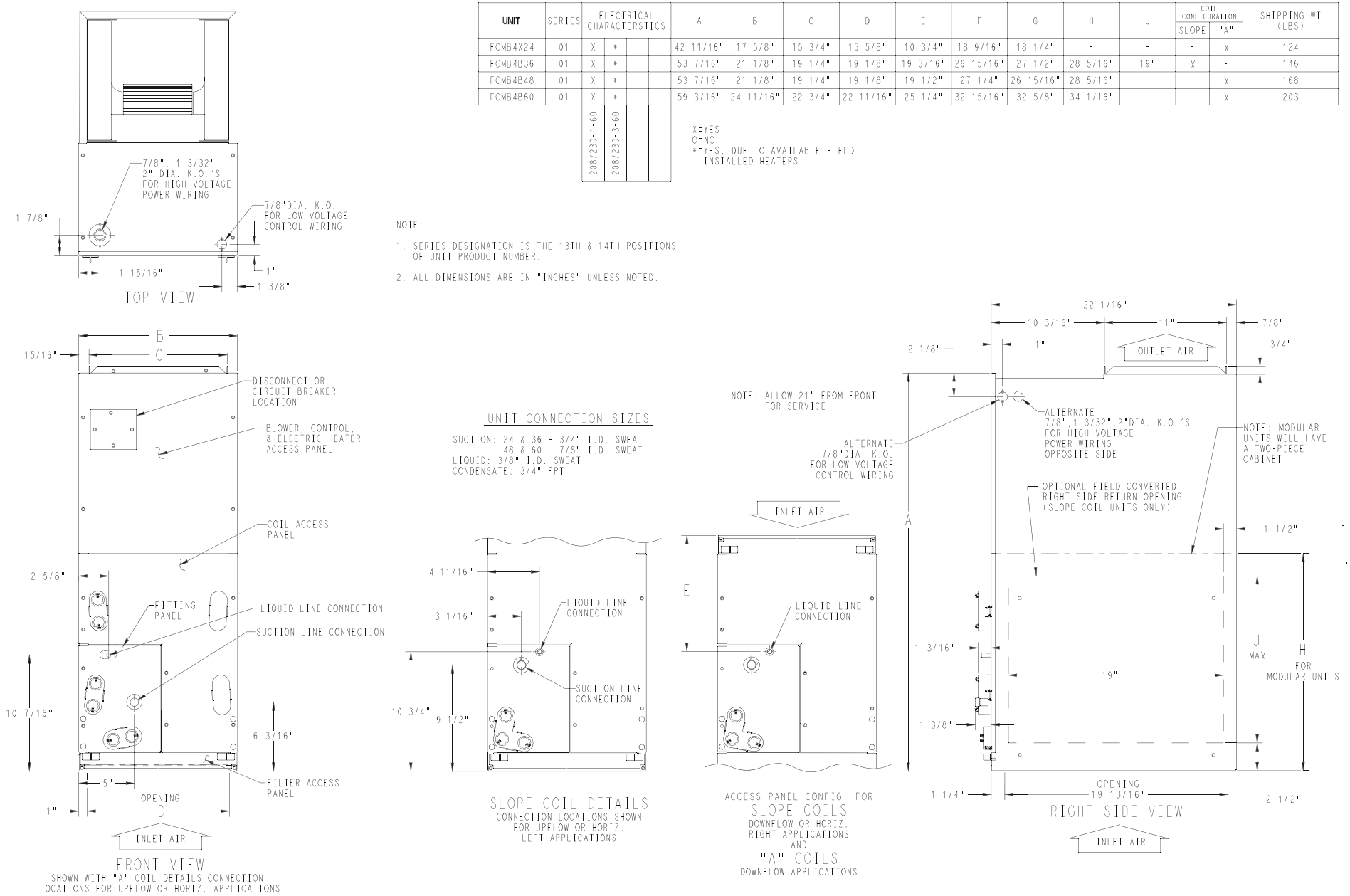

A230464

Fig. 1 – FCM Dimensional Drawing, sheet 1

DIMENSIONS (cont.)

NOTES:

1. CONDENSATE PAN DRAIN CAPS NOT SHOWN FOR CLARITY.
2. ALL DIMENSIONS ARE IN "INCHES" UNLESS NOTED.

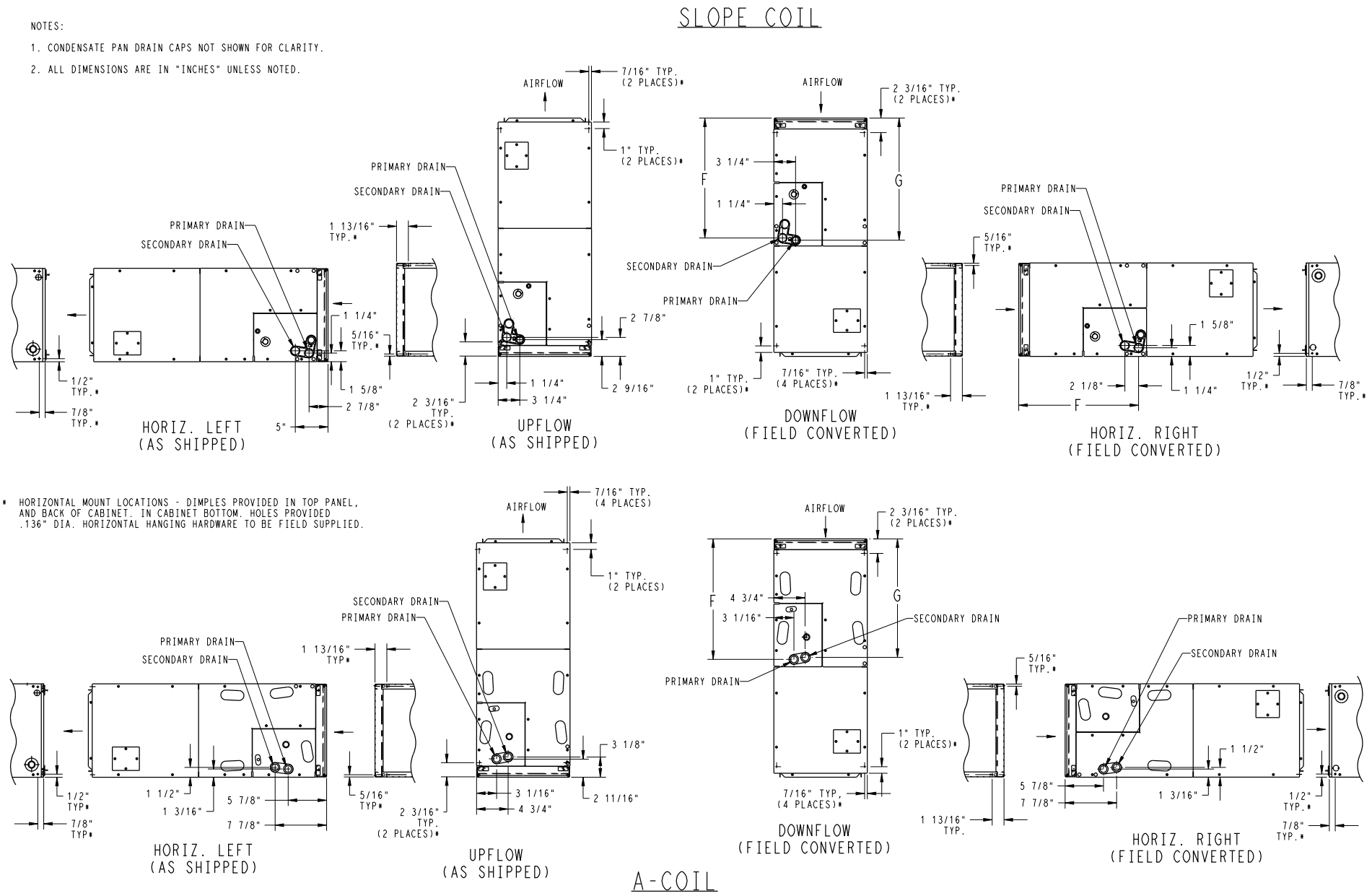

A230465

Fig. 2 – FCM Dimensional Drawing, sheet 2

DIMENSIONS (cont.)

UNIT	SERIES	ELECTRICAL CHARACTERSTICS				A	B	C	D	E	F	G	H	J	COIL CONFIGURATION		SHIPPING WT (Kgs)
															SLOPE	"A"	
FCMB4X24	01	X	*			1084.3	447.7	400.0	396.9	273.0	471.5	463.6	-	-	-	X	56.3
FCMB4B36	01	X	*			1357.3	536.6	489.0	485.8	487.4	684.2	698.5	719.1	482.6	X	-	66.3
FCMB4B48	01	X	*			1357.3	536.6	489.0	485.8	495.3	692.2	684.2	719.1	-	-	X	76.3
FCMB4B60	01	X	*			1503.4	627.1	577.8	576.3	641.4	836.6	828.7	865.2	-	-	X	92.2
		208/230-1-60	208/230-3-60														

X=YES
O=NO
*=YES, DUE TO AVAILABLE FIELD INSTALLED HEATERS.

NOTE:

1. SERIES DESIGNATION IS THE 13TH & 14TH POSITIONS OF UNIT PRODUCT NUMBER.
2. ALL DIMENSIONS ARE IN "MM" UNLESS NOTED.

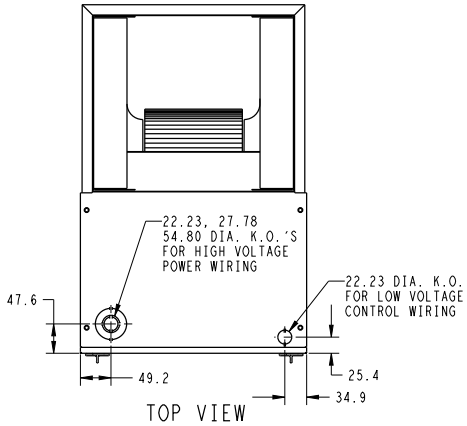

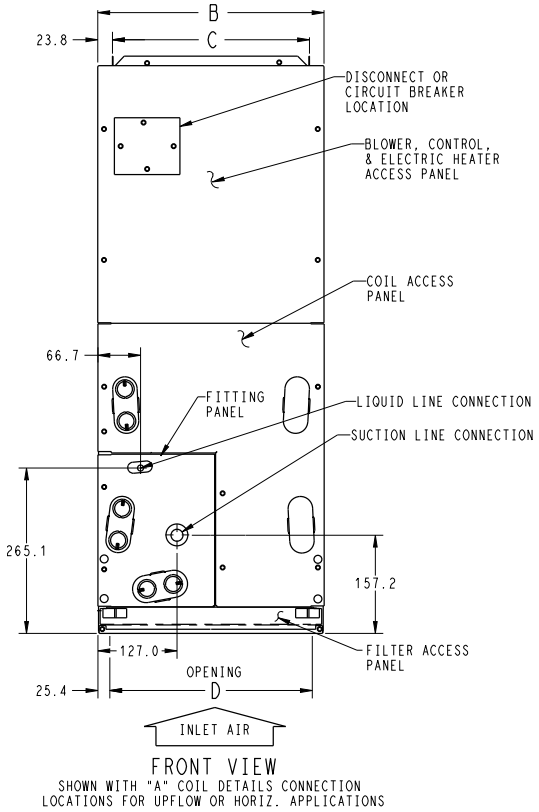

UNIT CONNECTION SIZES

SUCTION: 24 & 36 - 19.05 I.D. SWEAT
48 & 60 - 22.23 I.D. SWEAT
LIQUID: 9.53 I.D. SWEAT
CONDENSATE: 19.0 FPT

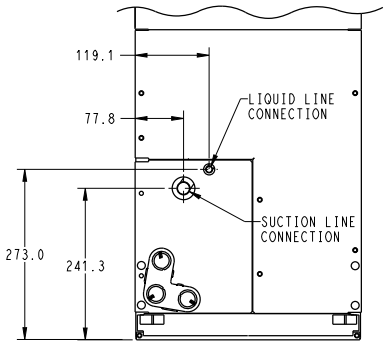

SLOPE COIL DETAILS
CONNECTION LOCATIONS SHOWN
FOR UPFLOW OR HORIZ.
LEFT APPLICATIONS

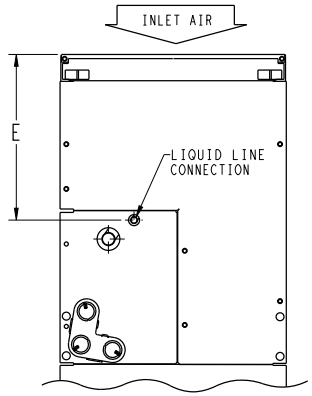

ACCESS PANEL CONFIG. FOR
SLOPE COILS
DOWNFLOW OR HORIZ.
RIGHT APPLICATIONS
AND
"A" COILS
DOWNFLOW APPLICATIONS

NOTE: ALLOW 533.4 FROM FRONT FOR SERVICE

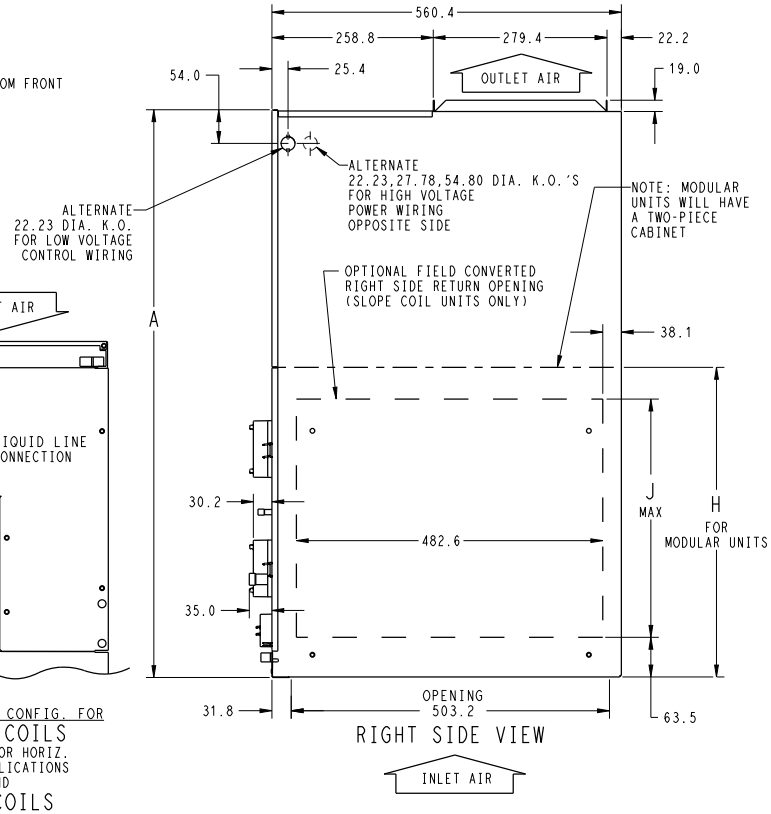

A230466

Fig. 3 – FCM Dimensional Drawing (metric) sheet 3

DIMENSIONS (cont.)

NOTES:

1. CONDENSATE PAN DRAIN CAPS NOT SHOWN FOR CLARITY.
2. ALL DIMENSIONS ARE IN "MM" UNLESS NOTED.

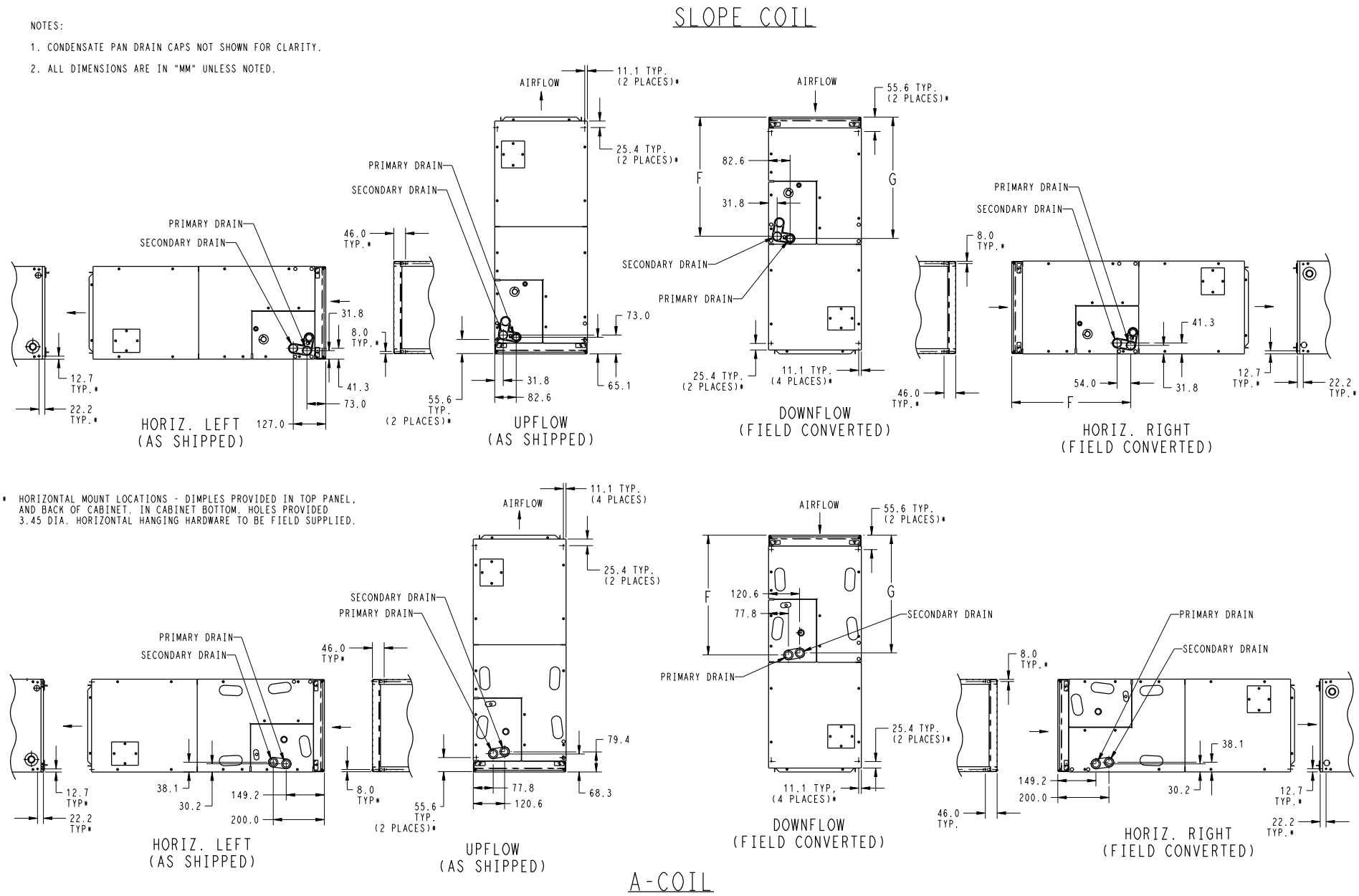

Fig. 4 – FCM Dimensional Drawing (metric) sheet 4

Table 2 – Physical Data

MODEL	FIELD-INSTALLED HEAT (kW)	NOMINAL COOLING CAPACITY (BTUH)	DIMENSIONS (In/mm)			SHIPPING WEIGHT (LBS / KG)
			HEIGHT	WIDTH	DEPTH	
FCMB4X24L0BA	5, 8, 9, 10, 15, 20	18,000 to 36,000	42-11/16 in 1084.3 mm	17-5/8 in 447.7 mm	22-1/16 in 560.4 mm	124 lbs / 56.3 kg
FCMB4B36L0CA	5, 8, 9, 10, 15, 18, 20	24,000 to 42,000	53-7/16 in 1357.3 mm	21-1/8 in 536.6 mm	22-1/16 in 560.4 mm	146 lbs / 66.3 kg
FCMB4B48L0CA	5, 8, 9, 10, 15, 18, 20, 24, 30	30,000 to 48,000	53-7/16 in 1357.3 mm	21-1/8 in 536.6 mm	22-1/16 in 560.4 mm	168 lbs / 76.3 kg
FCMB4B60L0DA	8, 9, 10, 15, 18, 20, 24, 30	36,000 to 60,000	59-3/16 in 1503.4 mm	24-11/16 in 627.1 mm	22-1/16 in 560.4 mm	203 lbs / 92.2 kg

Table 3 – Specifications

Size	24	36	48	60
COIL				
Refrigerant Metering Device	Refrigerant (R-410A)			
TXV Size	2 Ton	3 Ton	4 Ton	5 Ton
Rows/Fins Per In.	3/14.5			
Face Area (Sq. Ft.)	3.46		5.93	7.42
Configuration	A	Slope	A	
BLOWER AND MOTOR				
Air Discharge	Upflow, Downflow, Horizontal			
CFM (Nominal Cooling/Heating)	525	700	875	1050
	700	875	1050	1225
	875	1050	1225	1400
	1050	1225	1400	1750
Motor HP (ECM)	1/2		3/4	
FILTER SIZE (W x L), in (mm)	16 x 20 (406.4 x 508)	20 x 20 (508 x 508)		23 x 20 (584.2 x 508)
CABINET CONFIGURATION OPTIONS	1 Piece	Modular		

PERFORMANCE DATA

AIRFLOW DELIVERY — COOLING, HEATING, ELECTRIC HEATING MODES

These fan coils will provide airflow at a rate that is requested by the Integrated System User Interface during air conditioning or heat pump heating (without electric heat) modes. The nominal airflow for both heating and cooling modes is 350 cfm/ton nominal size of the outdoor unit installed. The airflow actually requested by the User Interface is modified by its internal algorithms for zoning, comfort or efficiency concerns. Refer to the documentation for the User Interface for more information on how the User Interface controls the fan coil. Safe operation of electric heaters requires airflow delivery at or above the minimum CFM for electric heater application listed in the chart below. The fan coil will adjust its airflow delivery to maintain safe airflow as operating mode and staging conditions require. See Table 4.

Table 4 – Airflow Delivery (CFM) — Electric Heating Modes

FAN UNIT SIZE	OUTDOOR UNIT CAPACITY BTUH	ELECTRIC HEATER kW RANGE											
		0-5			0-10			0-15			0-20		
		Lo	Nom	High	Lo	Nom	High	Lo	Nom	High	Lo	Nom	High
24	18,000	700	700	805	750	750	863	—	—	—	—	—	—
	24,000	700	700	805	750	750	863	1050	1050	1208	—	—	—
	30,000	875	875	1006	875	875	1006	1050	1050	1208	1200	1200	1380
	36,000	1050	1050	1208	1050	1050	1208	1050	1050	1208	1200	1200	1380
36	24,000	700	700	805	750	750	863	1050	1050	1208	1225	—	—
	30,000	875	875	1006	875	875	1006	1050	1050	1208	1225	—	—
	36,000	1050	1050	1208	1050	1050	1208	1050	1050	1208	1225	1225	1409
	42,000	1225	1225	1409	1225	1225	1409	1225	1225	1409	1225	1225	1409
FAN UNIT SIZE	OUTDOOR UNIT CAPACITY BTUH	ELECTRIC HEATER kW RANGE											
		0-10			0-15			0-20			0-30		
		Lo	Nom	High	Lo	Nom	High	Lo	Nom	High	Lo	Nom	High
48	30,000	1000	1000	1150	1200	1200	1380	—	—	—	—	—	—
	36,000	1100	1100	1265	1200	1200	1380	1300	1300	1495	—	—	—
	42,000	1225	1225	1409	1225	1225	1409	1350	1350	1553	—	—	—
	48,000	1400	1400	1610	1400	1400	1610	1400	1400	1610	1500	1500	1725
60	36,000	1200	1200	1380	1250	1250	1438	1350	1350	1553	—	—	—
	42,000	1225	1225	1409	1300	1300	1495	1350	1350	1553	—	—	—
	48,000	1400	1400	1610	1400	1400	1610	1400	1400	1610	1750	1750	2013
	60,000	1750	1750	2013	1750	1750	2013	1750	1750	2013	1750	1750	2013

NOTE: Lo, Nom, and Hi refer to AC, HP, CFM ADJUST Section
" — " Airlow not recommended for heater/system size.

Table 5 – Minimum CFM for Electric Heater Application*

FAN COIL UNIT SIZE (TON)	HEAT PUMP UNIT SIZE (TON)	CFM				
		HEATER SIZE kW				
		5	8, 9, 10	12, 15	18, 20	24, 30
24 (2)	Emergency	700	750	1050	1200	
	18 (1½)	700	750	1050	1200	—
	24 (2)	700	750	1050	1200	—
	30 (2½)	875	875	1050	1200	—
	36 (3)	1050	1050	1050	1200	—
36 (3)	Emergency	700	750	1050	1225	
	24 (2)	700	750	1050	1225	—
	30 (2½)	875	875	1050	1225	—
	36 (3)	1050	1050	1050	1225	—
	42 (3½)	1225	1225	1225	1225	—
48 (4)	Emergency	1000	1000	1200	1300	1450
	30 (2½)	1000	1000	1200	1300	1450
	36 (3)	1100	1100	1200	1300	1450
	42 (3½)	1225	1225	1225	1350	1450
	48 (4)	1400	1400	1400	1400	1450
60 (5)	Emergency	1200	1200	1300	1350	1750
	36 (3)	1200	1200	1250	1350	1750
	42 (3½)	1225	1225	1300	1350	1750
	48 (4)	1400	1400	1400	1400	1750
	60 (5)	1750	1750	1750	1750	1750

*. These airflows are minimum acceptable airflows as UL listed. Actual airflow delivered will be per airflow delivery chart for Electric Heating Modes.

ACCEPTABLE DUCT CONDITIONS

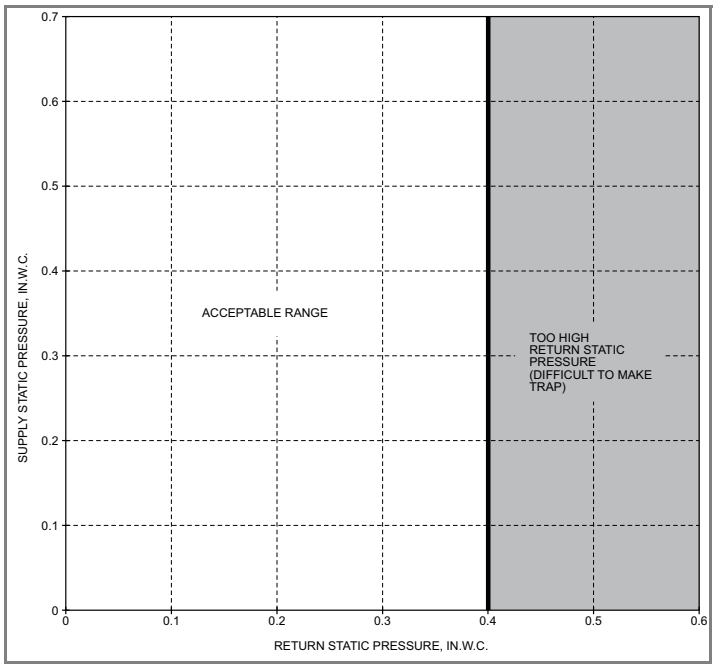

A02296

Acceptable Duct Conditions

For satisfactory operation (specifically making dry secondary trap), subject fan coils must be installed with duct systems which fall within the "Acceptable Range" illustrated above.

The airflow performance charts for the fan coil depict nominal airflow delivery for heating and cooling mode operation versus duct system static pressure drop. Cooling mode operation is shown as solid vertical lines for all 4 system size selections. Heating mode operation for the 4 system size selections are shown as dashed vertical lines.

The dotted curved lines are static pressure drop characteristics for several fixed-duct systems. These lines can be used to predict the system static pressure drop at any airflow given the actual drop at 1 known point.

For example, a duct system is designed for 0.15 in. water column (in. w.c.) drop at 1200 CFM. The FE4B 5-ton operating at nominal cooling airflow would deliver 1050 CFM with a duct system drop of 0.11 in. w.c.. (See point 1 in the Airflow Performance/Static Pressure figure below.) On the same duct system, the FE4B 5-ton operating at nominal heating airflow would deliver 945 CFM with a duct system drop of 0.09 in. w.c. (See point 2.)

This example is but one of many possible duct system designs. The FE4B 5-ton will deliver the above airflows against much higher static pressures.

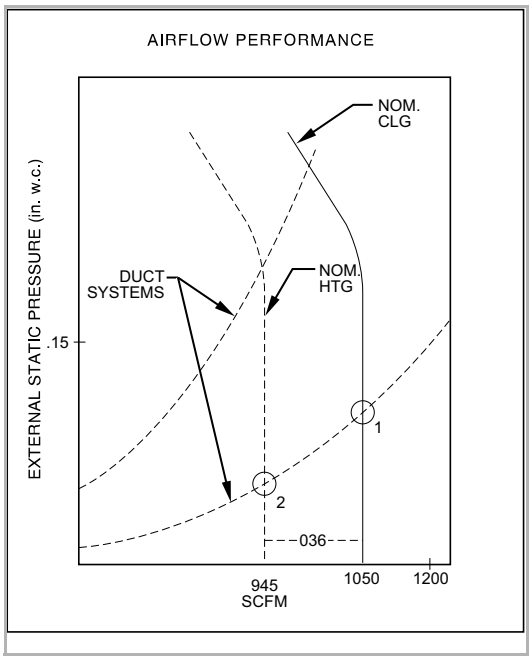

A09339

PERFORMANCE DATA (cont)

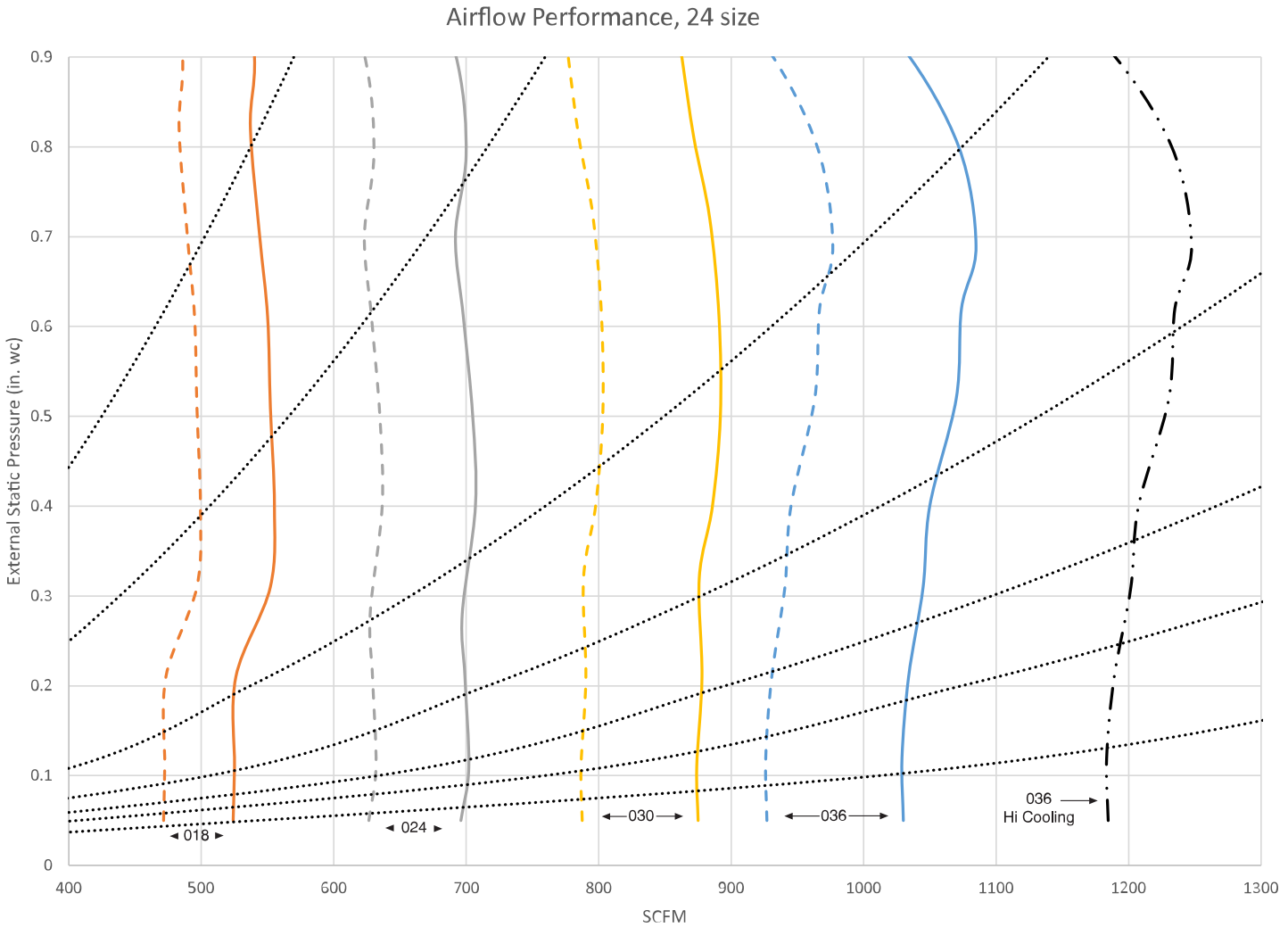

A230434

2 Ton

——— Nominal Cooling and Heat Pump Efficiency airflow for each size selection. Airflow can be adjusted +15% to -10%.
---- Nominal Heat Pump Comfort airflow for each size selection. Airflow can be adjusted +15% to -10%.
· - · - Maximum cooling airflow for largest size selection. Adjusted +15% from nominal.
· · · · · · Fixed Duct Systems (See description under Acceptable Duct Conditions.)

PERFORMANCE DATA (cont)

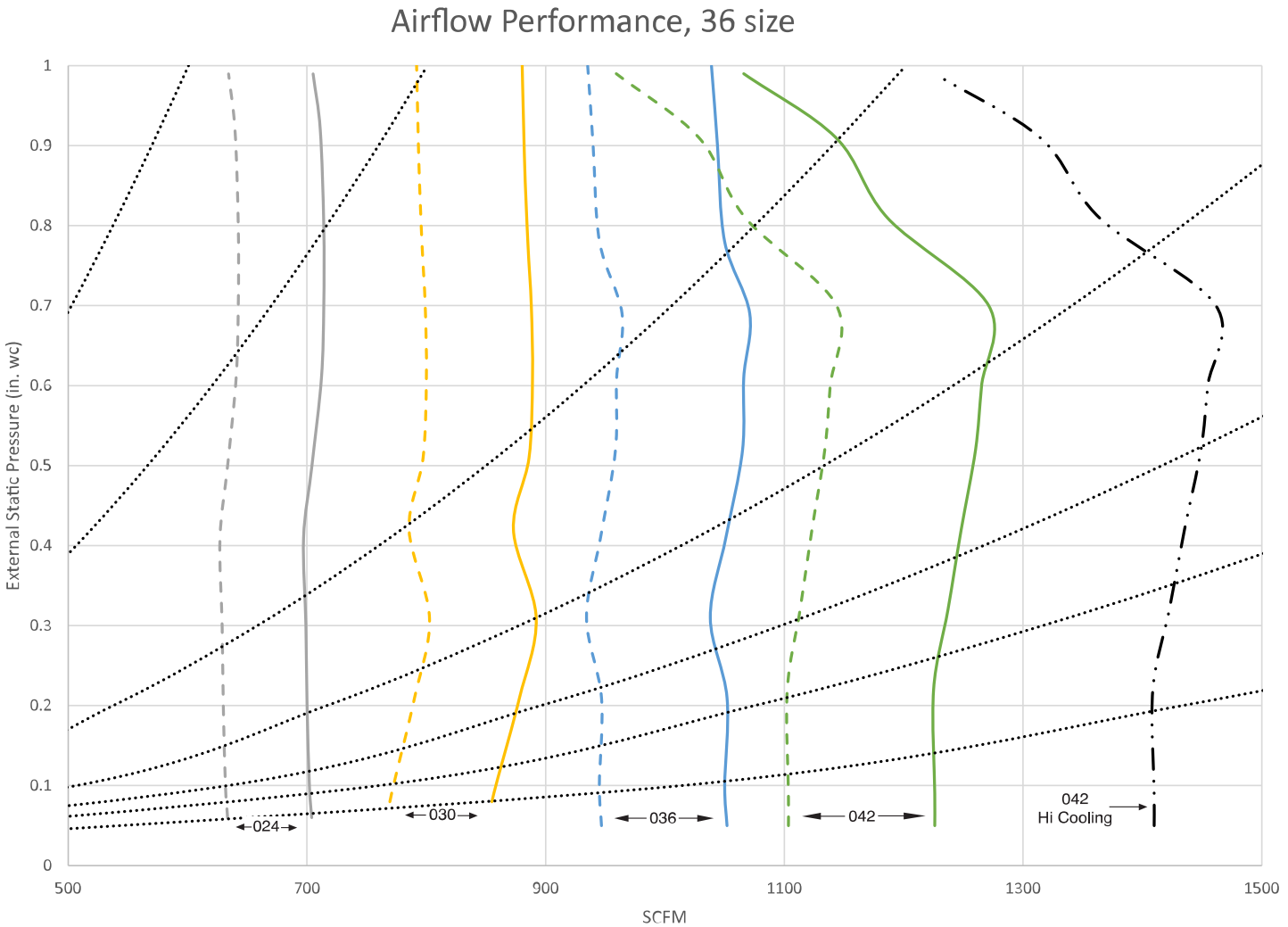

A230435

3 Ton

——— Nominal Cooling and Heat Pump Efficiency airflow for each size selection. Airflow can be adjusted +15% to -10%.
---- Nominal Heat Pump Comfort airflow for each size selection. Airflow can be adjusted +15% to -10%.
· - · - Maximum cooling airflow for largest size selection. Adjusted +15% from nominal.
· · · · · · Fixed Duct Systems (See description under Acceptable Duct Conditions.)

PERFORMANCE DATA (cont)

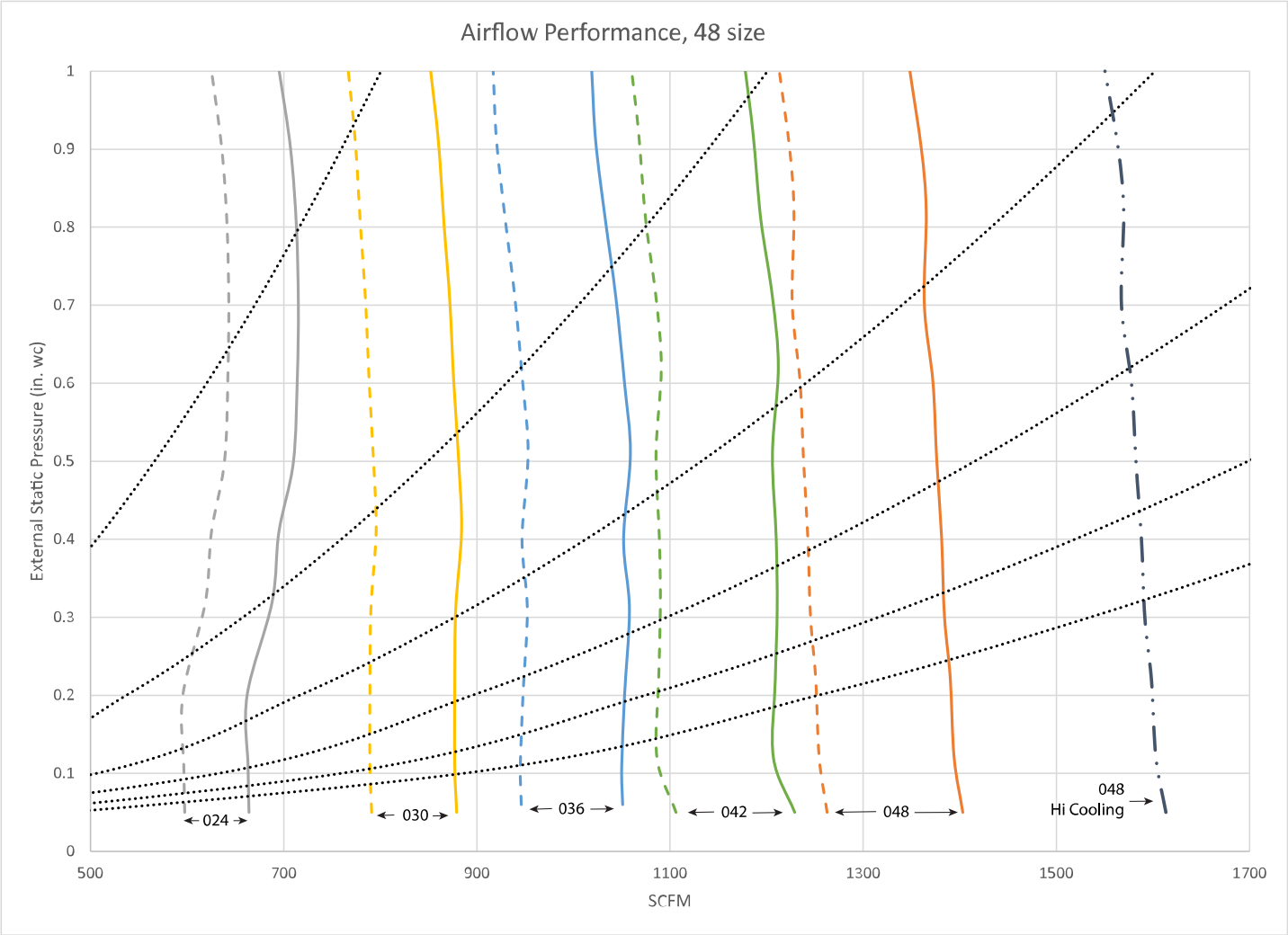

A230436

4 Ton

——— Nominal Cooling and Heat Pump Efficiency airflow for each size selection. Airflow can be adjusted +15% to -10%.
---- Nominal Heat Pump Comfort airflow for each size selection. Airflow can be adjusted +15% to -10%.
· - · - Maximum cooling airflow for largest size selection. Adjusted +15% from nominal.
· · · · · · Fixed Duct Systems (See description under Acceptable Duct Conditions.)

PERFORMANCE DATA (cont)

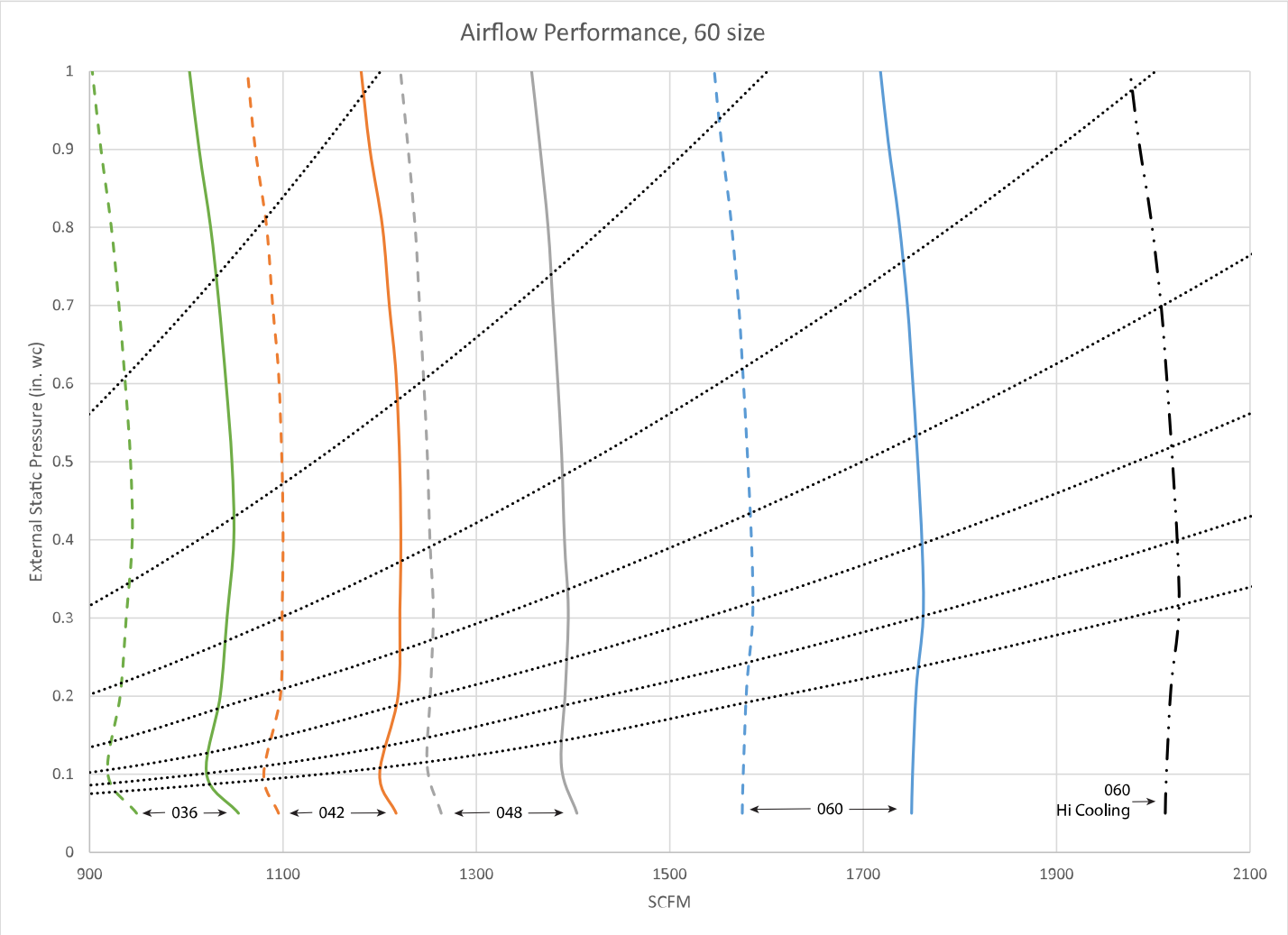

A230437

5 Ton

——— Nominal Cooling and Heat Pump Efficiency airflow for each size selection. Airflow can be adjusted +15% to -10%.
---- Nominal Heat Pump Comfort airflow for each size selection. Airflow can be adjusted +15% to -10%.
· - · - Maximum cooling airflow for largest size selection. Adjusted +15% from nominal.
· · · · · · Fixed Duct Systems (See description under Acceptable Duct Conditions.)

Table 6 – Cooling Capacities (MBtuh)

INDOOR COIL AIR		SATURATED TEMPERATURE LEAVING EVAPORATOR (deg F)														
		35			40			45			50			55		
CFM	EWB	TC	SHC	BF	TC	SHC	BF	TC	SHC	BF	TC	SHC	BF	TC	SHC	BF
SIZE 24																
525	72	37.50	19.04	0.00	33.96	17.17	0.00	29.95	15.18	0.00	25.35	13.07	0.00	20.11	10.83	0.00
	67	30.71	19.50	0.00	27.01	17.49	0.00	22.82	15.38	0.00	18.08	13.17	0.00	12.92	10.93	0.00
	62	24.45	19.79	0.00	20.62	17.68	0.00	16.51	15.56	0.01	12.74	12.74	0.05	10.53	10.53	0.21
700	72	46.28	23.46	0.00	42.01	21.31	0.00	37.11	18.99	0.00	31.54	16.50	0.00	25.10	13.80	0.01
	67	38.08	24.46	0.01	33.62	22.14	0.01	28.52	19.62	0.01	22.62	16.92	0.01	16.16	14.14	0.01
	62	30.57	25.26	0.01	25.94	22.75	0.01	20.81	20.13	0.02	16.58	16.58	0.08	13.73	13.73	0.23
875	72	53.42	27.14	0.00	48.58	24.80	0.00	42.99	22.24	0.00	36.57	19.46	0.00	29.26	16.44	0.01
	67	44.14	28.75	0.02	39.07	26.18	0.02	33.23	23.40	0.01	26.53	20.34	0.02	19.00	17.14	0.02
	62	35.64	30.11	0.02	30.44	27.37	0.02	24.72	24.45	0.03	20.16	20.16	0.11	16.72	16.72	0.26
1050	72	59.25	30.25	0.00	54.00	27.79	0.01	47.91	25.05	0.02	40.85	22.05	0.02	32.69	18.77	0.02
	67	49.16	32.52	0.02	43.60	29.78	0.03	37.18	26.76	0.03	29.81	23.50	0.03	21.58	19.97	0.04
	62	39.88	34.49	0.03	34.24	31.56	0.03	28.13	28.41	0.04	23.44	23.44	0.14	19.43	19.43	0.28
1225	72	64.10	32.93	0.02	58.53	30.39	0.02	52.02	27.54	0.03	44.44	24.38	0.03	35.61	20.89	0.03
	67	53.37	35.88	0.04	47.43	33.02	0.04	40.52	29.84	0.04	32.58	26.37	0.04	23.87	22.63	0.05
	62	43.50	38.51	0.04	37.52	35.42	0.04	31.22	32.09	0.06	26.46	26.46	0.17	21.98	21.98	0.31
SIZE 36																
700	72	46.73	23.71	0.00	42.21	21.42	0.00	37.03	18.95	0.00	31.12	16.32	0.00	24.47	13.58	0.00
	67	38.23	24.55	0.01	33.46	22.07	0.00	28.13	19.46	0.00	22.20	16.73	0.01	15.77	13.96	0.01
	62	30.47	25.19	0.01	25.73	22.64	0.01	20.64	20.02	0.02	16.45	16.45	0.08	13.57	13.57	0.24
875	72	54.14	27.50	0.00	49.01	25.01	0.00	43.08	22.29	0.00	36.32	19.31	0.01	28.48	16.14	0.01
	67	44.54	28.96	0.01	39.13	26.21	0.02	32.90	23.21	0.02	25.90	20.10	0.01	18.55	16.94	0.02
	62	35.68	30.12	0.02	30.20	27.22	0.02	24.46	24.28	0.03	20.00	20.00	0.11	16.52	16.52	0.26
1050	72	60.23	30.73	0.00	54.65	28.07	0.02	48.16	25.17	0.01	40.65	21.97	0.02	31.96	18.47	0.02
	67	49.80	32.84	0.02	43.85	29.89	0.03	36.97	26.66	0.03	29.12	23.18	0.03	21.00	19.69	0.04
	62	40.12	34.60	0.03	34.09	31.45	0.03	27.83	28.19	0.04	23.19	23.19	0.14	19.17	19.17	0.29
1225	72	65.33	33.52	0.01	59.35	30.77	0.02	52.41	27.71	0.03	44.36	24.34	0.03	34.94	20.62	0.03
	67	54.19	36.28	0.04	47.86	33.21	0.04	40.43	29.78	0.04	31.95	26.07	0.04	23.18	22.28	0.05
	62	43.93	38.70	0.04	37.54	35.38	0.04	30.91	31.83	0.06	26.14	26.14	0.17	21.63	21.63	0.31
1400	72	69.64	35.98	0.03	63.37	33.15	0.04	56.04	29.99	0.04	47.51	26.47	0.04	37.51	22.57	0.04
	67	57.94	39.40	0.05	51.25	36.22	0.05	43.43	32.67	0.05	34.46	28.78	0.05	25.18	24.72	0.07
	62	47.26	42.51	0.05	40.58	39.04	0.06	33.84	35.26	0.08	28.85	28.85	0.20	23.92	23.91	0.34
SIZE 48																
875	72	55.50	29.11	0.00	50.59	26.54	0.00	44.88	23.71	0.00	38.24	20.63	0.00	30.68	17.36	0.00
	67	45.72	30.33	0.00	40.45	27.50	0.00	34.52	24.46	0.00	27.67	21.20	0.00	19.98	17.78	0.00
	62	36.75	31.31	0.00	31.36	28.31	0.00	25.38	25.13	0.01	20.06	20.06	0.06	16.66	16.66	0.22
1050	72	62.61	32.86	0.00	57.23	30.14	0.00	50.90	27.09	0.00	43.49	23.73	0.00	34.84	20.06	0.00
	67	51.82	34.75	0.00	45.98	31.70	0.00	39.25	28.31	0.00	31.53	24.69	0.01	22.90	20.87	0.01
	62	41.81	36.27	0.01	35.78	32.96	0.01	29.15	29.47	0.01	23.60	23.60	0.08	19.62	19.62	0.24

Manufacturer reserves the right to change, at any time, specifications and designs without notice and without obligations.

Table 6 – Cooling Capacities (MBtuh)

1225	72	68.60	36.10	0.00	62.85	33.28	0.00	56.08	30.11	0.00	48.02	26.55	0.00	38.54	22.55	0.00
	67	57.05	38.72	0.01	50.81	35.50	0.01	43.41	31.92	0.00	34.94	27.95	0.01	25.54	23.82	0.01
	62	46.23	40.86	0.01	39.68	37.32	0.01	32.60	33.60	0.02	26.95	26.95	0.10	22.46	22.46	0.25
1400	72	73.71	38.97	0.00	67.64	36.08	0.00	60.51	32.80	0.00	52.06	29.07	0.01	41.85	24.88	0.01
	67	61.55	42.32	0.01	54.96	38.99	0.01	47.17	35.23	0.01	37.95	31.04	0.01	27.97	26.64	0.02
	62	50.14	45.16	0.02	43.27	41.48	0.02	35.80	37.53	0.03	30.14	30.14	0.12	25.15	25.15	0.27
1600	72	78.67	41.89	0.00	72.30	38.96	0.00	64.83	35.58	0.01	55.92	31.76	0.01	45.16	27.34	0.02
	67	65.91	46.06	0.02	59.04	42.67	0.02	50.80	38.77	0.02	41.09	34.39	0.02	30.45	29.70	0.03
	62	54.03	49.74	0.02	46.89	45.95	0.03	39.16	41.76	0.04	33.49	33.49	0.15	28.02	28.02	0.29
1750	72	81.90	43.87	0.01	75.39	40.88	0.01	67.68	37.48	0.02	58.47	33.58	0.02	47.34	29.06	0.02
	67	68.76	48.66	0.02	61.68	45.22	0.02	53.22	41.25	0.02	43.19	36.78	0.02	32.18	31.88	0.04
	62	56.62	52.98	0.03	49.32	49.11	0.03	41.57	41.19	0.05	35.82	35.82	0.17	30.02	30.02	0.30
SIZE 60																
1050	72	79.55	38.39	0.00	72.99	35.30	0.00	65.21	31.82	0.00	56.07	27.96	0.00	45.28	23.69	0.00
	67	65.98	40.54	0.00	58.84	37.05	0.00	50.47	33.18	0.00	40.84	28.98	0.00	29.88	24.50	0.00
	62	53.30	42.23	0.00	45.80	38.43	0.00	37.36	34.36	0.01	29.92	29.92	0.07	24.95	24.95	0.22
1225	72	87.50	42.31	0.00	80.43	39.08	0.00	72.12	35.46	0.00	62.20	31.35	0.00	50.39	26.76	0.00
	67	72.90	45.29	0.00	65.20	41.61	0.00	56.12	37.49	0.00	45.43	32.88	0.00	33.42	28.01	0.01
	62	59.18	47.71	0.01	50.98	43.61	0.01	41.86	39.23	0.01	34.26	34.26	0.08	28.63	28.63	0.23
1400	72	94.29	45.76	0.00	86.84	42.45	0.00	78.04	38.71	0.00	67.56	34.46	0.00	54.92	29.60	0.00
	67	78.85	49.60	0.01	70.71	45.82	0.00	61.08	41.50	0.01	49.58	36.61	0.01	36.65	31.38	0.01
	62	64.33	52.82	0.01	55.68	48.55	0.01	45.98	43.88	0.02	38.38	38.38	0.10	32.14	32.14	0.25
1600	72	100.91	49.28	0.00	93.10	45.91	0.00	83.86	42.08	0.00	72.84	37.68	0.00	59.46	32.60	0.01
	67	84.67	54.09	0.01	76.18	50.22	0.01	66.02	45.76	0.01	53.86	40.66	0.01	40.02	35.07	0.02
	62	69.49	58.29	0.01	60.49	53.89	0.01	50.41	49.00	0.02	42.85	42.85	0.13	35.97	35.97	0.26
1750	72	105.21	51.67	0.00	97.24	48.25	0.01	87.70	44.38	0.01	76.28	39.90	0.01	62.50	34.70	0.01
	67	88.49	57.22	0.01	79.74	53.27	0.01	69.29	48.78	0.01	56.75	43.55	0.01	42.37	37.74	0.02
	62	72.94	62.18	0.02	63.73	57.71	0.02	53.59	52.69	0.03	46.02	46.02	0.14	38.71	38.71	0.28
2000	72	111.40	55.29	0.01	103.09	51.86	0.01	93.23	47.91	0.01	81.31	43.32	0.01	66.94	38.00	0.01
	67	93.99	62.07	0.02	84.88	58.05	0.02	74.05	53.44	0.02	61.00	48.09	0.02	46.00	41.99	0.03
	62	77.95	68.26	0.02	68.57	63.72	0.03	58.99	58.28	0.06	51.02	51.02	0.17	42.96	42.96	0.30

CFM - Cubic Ft per Minute **EWB** - Entering Wet Bulb (_F / _C) **LWB** - Leaving Wet Bulb (_F / _C) **TC** - Gross Cooling Capacity 1000 Btuh

SHC - Gross Sensible Capacity 1000 Btuh **BF** - Bypass Factor **MBH** - 1000 Btuh

NOTES:

1. Contact manufacturer for cooling capacities at conditions other than shown in table.
2. Formulas:
   Leaving db = entering db - $\frac{\text{sensible heat cap.}}{1.09 \times \text{CFM}}$
   Leaving wb = wb corresponding to enthalpy of air leaving coil (h_{lwb})
   $h_{lwb} = h_{ewb} - \frac{\text{total capacity (Btuh)}}{4.5 \times \text{CFM}}$
   where h_{ewb} = enthalpy of air entering coil. Direct interpolation is permissible. Do not extrapolate.
3. SHC is based on 80_F (27_C) db temperature of air entering coil. Below 80_F (27_C) db, subtract (Correction Factor x CFM) from SHC. Above 80_F (27_C) db, add (Correction Factor x CFM) to SHC.
4. Bypass Factor = 0 indicates no psychometric solution. Use bypass factor of next lower EWB for approximation.

SHC Correction Factor

	ENTERING AIR DRY-BULB TEMPERATURE (°F)					
BYPASS FACTOR	79	78	77	76	75	Under 75
	81	82	83	84	85	Over 85
	Correction Factor					
0.10	.098	1.96	2.94	3.92	4.91	Use formula shown below
0.20	0.87	1.74	2.62	3.49	4.36	
0.30	0.76	1.53	2.29	3.05	3.82	

Interpolation is permissible. Correction Factor = 1.09 x (1 - BF) x (db - 80)

PERFORMANCE DATA (cont.)

Table 7 – Estimated Sound Power Level of Airflow from Duct (dB)

UNIT SIZE	CONDITIONS		OCTAVE BAND CENTER FREQUENCY*						
	CFM	Ext Static Pressure	63	125	250	500	1000	2000	4000
24	400	0.50	69.0	65.0	61.0	58.0	56.0	54.0	50.0
	600	0.50	70.8	66.8	62.8	59.8	57.8	55.8	51.8
	800	0.50	72.0	68.0	64.0	61.0	59.0	57.0	53.0
	1000	0.50	73.0	69.0	65.0	62.0	60.0	58.0	54.0
	1200	0.50	73.8	69.8	65.8	62.8	60.8	58.8	54.8
	1400	0.50	74.4	70.4	66.4	63.4	61.4	59.4	55.4
36	400	0.50	69.0	65.0	61.0	58.0	56.0	54.0	50.0
	600	0.50	70.8	66.8	62.8	59.8	57.8	55.8	51.8
	800	0.50	72.0	68.0	64.0	61.0	59.0	57.0	53.0
	1000	0.50	73.0	69.0	65.0	62.0	60.0	58.0	54.0
	1200	0.50	73.8	69.8	65.8	62.8	60.8	58.8	54.8
	1400	0.50	74.4	70.4	66.4	63.4	61.4	59.4	55.4
	1600	0.50	75.0	71.0	67.0	64.0	62.0	60.0	56.0
48	400	0.50	69.0	65.0	61.0	58.0	56.0	54.0	50.0
	600	0.50	70.8	66.8	62.8	59.8	57.8	55.8	51.8
	800	0.50	72.0	68.0	64.0	61.0	59.0	57.0	53.0
	1000	0.50	73.0	69.0	65.0	62.0	60.0	58.0	54.0
	1200	0.50	73.8	69.8	65.8	62.8	60.8	58.8	54.8
	1400	0.50	74.4	70.4	66.4	63.4	61.4	59.4	55.4
	1600	0.50	75.0	71.0	67.0	64.0	62.0	60.0	56.0
60	600	0.50	70.8	66.8	62.8	59.8	57.8	55.8	51.8
	800	0.50	72.0	68.0	64.0	61.0	59.0	57.0	53.0
	1000	0.50	73.0	69.0	65.0	62.0	60.0	58.0	54.0
	1200	0.50	73.8	69.8	65.8	62.8	60.8	58.8	54.8
	1400	0.50	74.4	70.4	66.4	63.4	61.4	59.4	55.4
	1600	0.50	75.0	71.0	67.0	64.0	62.0	60.0	56.0
	1800	0.50	75.5	71.5	67.5	64.5	62.5	60.5	56.5
	2000	0.50	76.0	72.0	68.0	65.0	63.0	61.0	57.0
	2150	0.50	76.3	72.3	68.3	65.3	63.3	61.3	57.3

*. Estimated sound power levels have been derived using the method described in the 1987 ASHRAE HVAC Systems & Applications Handbook, Chapter 52, p. 52.7.

Table 8 – Air Delivery Performance Correction Component Pressure Drop (in. wc) at Indicated Airflow (Dry to Wet Coil)

UNIT SIZE	CFM										
	600	700	800	900	1000	1100	1200	1300	1400	1500	1600
24	0.012	0.016	0.022	0.028	0.034	0.040	0.049	—	—	—	—
36	—	0.026	0.034	0.042	0.052	0.063	0.075	0.083	0.091	0.098	0.110
48	—	0.006	0.008	0.010	0.012	0.015	0.017	0.020	0.023	0.027	0.030
	CFM										
	1100	1200	1300	1400	1500	1600	1700	1800	1900	2000	2100
60	0.013	0.016	0.018	0.020	0.023	0.027	0.030	0.034	0.039	0.044	0.048

Table 9 – Factory-Installed Filter Static Pressure Drop (in wc)

	CFM								
Size	400	600	800	1000	1200	1400	1600	1800	2000
24	0.020	0.044	0.048	0.072	0.100	—	—	—	—
36	—	0.020	0.035	0.051	0.070	0.092	—	—	—
48	—	—	0.035	0.051	0.070	0.092	0.120	—	—
60	—	—	—	0.038	0.053	0.070	0.086	0.105	0.133

Manufacturer reserves the right to change, at any time, specifications and designs without notice and without obligations.

Table 10 – Units Without Electric Heat

UNIT SIZE	VOLTS/PH/HZ	MTR HP	MTR FLA	SINGLE CIRCUIT		BRANCH CIRCUIT
				MCA	MOCP	Min Wire Size Awg*
24	208/230/1/60	1/2	4	5	15	14
36	208/230/1/60	1/2	4	5	15	14
48	208/230/1/60	3/4	5.7	7.1	15	14
60	208/230/1/60	3/4	5.7	7.1	15	14

* Use copper wire only to connect unit. If other than uncoated (non-plated) 75°C ambient, copper wire (solid wire for 10 AWG and smaller, stranded wire for larger than 10 AWG) is used consult applicable tables of the National Electric Code (ANSI/NFPA 70).
NOTE: If branch circuit wire length exceeds 100 ft / 30.5 m, consult NEC 210-19a to determine maximum wire length. Use 2% voltage drop.
FLA - Full Load Amps

Table 11 – Electrical Data for Units with Electric Heat

HEATER PART NO.	kW @ 240 V	VOLTS/PH	STAGES (kW OPERATING)	INTERNAL CIRCUIT PROTECTION	FAN COIL SIZE USED WITH	HEATING CAP.* @ 230V	INTELLIGENT HEAT CAPABLE† (kW)
EHC05BKN	5	230/1	5	None	All	15,700	-
EHC07BKN	8	230/1	8	None	All	25,100	-
EHC10BKN	10	230/1	10	None	All	31,400	-
EHC15BKF	15	230/1	5, 15	Fuse‡	All	47,100	5, 10, 15
EHC20BKF	20	230/1	5, 20	Fuse‡	All	62,800	5, 15, 20
EHC09BKCN	9	230/1**	3, 9	None	All	28,200	3, 6, 9
EHC15BHN	15	230/1	5, 15	None	All	47,100	-
EHC18BHN	18	230/3††	6, 12, 18	None	All	56,500	-
EHC25BHCF	24	230/3††	8, 16, 24	Fuse	48, 60	78,300	8, 16, 24
EHC30BHCF	30	230/3††	10, 20, 30	Fuse	48, 60	94,100	10, 20, 30
EHC05BKB	5	230/1	5	Circuit Breaker	All	15,700	-
EHC07BKB	8	230/1	8	Circuit Breaker	All	25,100	-
EHC10BKB	10	230/1	10	Circuit Breaker	All	31,400	-
EHC15BKB	15	230/1	5, 15	Circuit Breaker	All	47,100	5, 10, 15
EHC20BKB	20	230/1	5, 20	Circuit Breaker	All	62,800	5, 15, 20

*. Does not include heat from blower motor.
†. Heaters designed with kW operating values are intelligent heat capable when used with compatible thermostat.
‡. Single circuit application of F15 and F20 heaters requires single-point wiring kit accessory.
**. Field convertible to 3 phase.
††. These heaters are field convertible to 1 phase, single or multiple supply circuit.

NOTE: for 240 volts, multiply 230V heater amps by 1.04.

Table 12 – Electric Heater Internal Protection

HEATER kW	PHASE	FUSES QTY / SIZE	CKT BKR QTY / SIZE*
5	1	—	1/60
8	1	—	1/60
9	1/3	—	—
10	1	—	1/60
15	1	2/30, 2/60	2/60
15	3	—	—
18	3	—	—
20	1	4/60	2/60
24	1/3	6/60	—
30	1/3	6/60	—

* All circuit breakers are 2 pole.

Table 13 – Electric Heater Electrical Data

FC Size	Motor FLA used	HEATER PART NO.	kW		PHASE	Internal Circuit Protection	HEATER AMPS 208/230V*			MIN AMPACITY 208/230V*			BRANCH CIRCUIT Min Wire Size (AWG) 208/230V†			BRANCH CIRCUIT Min Gnd Wire Size 208/230V†			BRANCH CIRCUIT Max Fuse/Ckt Bkr Amps 208/230V		
							Single Circuit	Dual Circuit		Single Circuit	Dual Circuit		Single Circuit	Dual Circuit		Single Circuit	Dual Circuit		Single Circuit	Dual Circuit	
			240V	208V				L1,L2	L3,L4		L1,L2	L3,L4		L1,L2	L3,L4		L1,L2	L3,L4		L1,L2	L3,L4
24-36	4.0	EHC05BKN	5	3.8	1	None	17.8/19.7	—	—	27.3/29.6	—	—	10/10	—	—	10/10	—	—	30/30	—	—
24-36	4.0	EHC05BKB	5	3.8	1	Ckt Bkr	17.8/19.7	—	—	27.3/29.6	—	—	10/10	—	—	10/10	—	—	30/30	—	—
48-60	5.7	EHC05BKN	5	3.8	1	None	17.8/19.7	—	—	29.4/31.8	—	—	10/8	—	—	10/10	—	—	30/35	—	—
48-60	5.7	EHC05BKB	5	3.8	1	Ckt Bkr	17.8/19.7	—	—	29.4/31.8	—	—	10/8	—	—	10/10	—	—	30/35	—	—
24-36	4.0	EHC07BKN	8	6.0	1	None	28.5/31.5	—	—	40.6/44.4	—	—	8/8	—	—	10/10	—	—	45/45	—	—
24-36	4.0	EHC07BKB	8	6.0	1	Ckt Bkr	28.5/31.5	—	—	40.6/44.4	—	—	8/8	—	—	10/10	—	—	45/45	—	—
48-60	5.7	EHC07BKN	8	6.0	1	None	28.5/31.5	—	—	42.8/46.5	—	—	8/8	—	—	10/10	—	—	45/50	—	—
48-60	5.7	EHC07BKB	8	6.0	1	Ckt Bkr	28.5/31.5	—	—	42.8/46.5	—	—	8/8	—	—	10/10	—	—	45/50	—	—
24-36	4.0	EHC10BKN	10	7.5	1	None	35.6/39.4	—	—	49.5/54.3	—	—	8/6	—	—	10/10	—	—	50/60	—	—
24-36	4.0	EHC10BKB	10	7.5	1	Ckt Bkr	35.6/39.4	—	—	49.5/54.3	—	—	8/6	—	—	10/10	—	—	50/60	—	—
48-60	5.7	EHC10BKN	10	7.5	1	None	35.6/39.4	—	—	51.6/56.4	—	—	6/6	—	—	10/10	—	—	60/60	—	—
48-60	5.7	EHC10BKB	10	7.5	1	Ckt Bkr	35.6/39.4	—	—	51.6/56.4	—	—	6/6	—	—	10/10	—	—	60/60	—	—
36	4.0	EHC09BKCN‡	9	6.8	1	None	32.2/35.6	—	—	45.3/49.5	—	—	8/6	—	—	10/10	—	—	50/50	—	—
36	4.0	EHC09BKCN	9	6.8	3	None	18.6/20.6	—	—	28.3/30.8	—	—	8/8	—	—	10/10	—	—	30/35	—	—
48-60	5.7	EHC09BKCN‡	9	6.8	1	None	32.2/35.6	—	—	47.4/51.6	—	—	8/6	—	—	10/10	—	—	50/60	—	—
48-60	5.7	EHC09BKCN	9	6.8	3	None	18.6/20.6	—	—	30.4/32.9	—	—	8/8	—	—	10/10	—	—	35/35	—	—
24-36	4.0	EHC15BKF**	15	11.3	1	Fuse	53.4/59.1	35.6/39.4	17.8/19.7	71.8/78.9	49.5/54.3	22.3/24.6	4/4	8/6	10/10	8/8	10/10	10/10	80/80	50/60	25/25
24-36	4.0	EHC15BKB	15	11.3	1	Ckt Bkr	—	35.6/39.4	17.8/19.7	—	49.5/54.3	22.3/24.6	—	8/6	10/10	—	10/10	10/10	—	50/60	25/25
48-60	5.7	EHC15BKF**	15	11.3	1	Fuse	53.4/59.1	35.6/39.4	17.8/19.7	73.9/81.0	51.6/56.4	22.3/24.6	4/4	6/6	10/10	8/8	10/10	10/10	80/90	60/60	25/25
48-60	5.7	EHC15BKB	15	11.3	1	Ckt Bkr	—	35.6/39.4	17.8/19.7	—	51.6/56.4	22.3/24.6	—	6/6	10/10	—	10/10	10/10	—	60/60	25/25
36	4.0	EHC15BHN	15	11.3	3	None	30.8/34.1	—	—	43.5/47.6	—	—	8/6	—	—	10/10	—	—	50/50	—	—
48-60	5.7	EHC15BHN	15	11.3	3	None	30.8/34.1	—	—	45.6/49.8	—	—	8/6	—	—	10/10	—	—	50/50	—	—
48-60	5.7	EHC18BHN	18	13.5	3	None	37.2/41.2	—	—	53.6/58.6	—	—	6/6	—	—	10/10	—	—	60/60	—	—
36	4.0	EHC20BKF**	20	15.0	1	Fuse	71.2/78.8	35.6/39.4	35.6/39.4	94.0/103.5	49.5/54.3	44.5/49.3	3/2	6/6	8/8	8/6	10/10	10/10	100/110	50/60	45/50
36	4.0	EHC20BKB	20	15.0	1	Ckt Bkr	—	35.6/39.4	35.6/39.4	—	49.5/54.3	44.5/49.3	—	6/6	8/8	—	10/10	10/10	—	50/60	45/50
48-60	5.7	EHC20BKF**	20	15.0	1	Fuse	71.2/78.8	35.6/39.4	35.6/39.4	96.3/105.6	51.6/56.4	44.5/49.3	3/2	6/6	8/8	8/6	10/10	10/10	100/110	60/60	45/50
48-60	5.7	EHC20BKB	20	15.0	1	Ckt Bkr	—	35.6/39.4	35.6/39.4	—	51.6/56.4	44.5/49.3	—	6/6	8/8	—	10/10	10/10	—	60/60	45/50
48-60	5.7	EHC25BHCF††	24	18.0	3	Fuse	49.3/54.6	—	—	68.8/75.4	—	—	4/4	—	—	8/8	—	—	70/80	—	—
48-60	5.7		24	18.0	1	Fuse	85.5/94.5	—	—	114.0/125.3	—	—	2/1	—	—	6/6	—	—	125/150	—	—
48-60	5.7	EHC30BHCF††	30	22.5	3	Fuse	61.7/68.2	—	—	84.3/92.4	—	—	4/3	—	—	8/8	—	—	90/100	—	—
48-60	5.7		30	22.5	1	Fuse	106.8/118.1	—	—	140.6/154.8	—	—	0/00	—	—	6/6	—	—	150/175	—	—

*. For 240V, multiply 230V heater amps by 1.04. Wire sizing and over-current protection may need adjustment per local code requirements.
†. Copper wire must be used. If other than uncoated (non-plated), 75°C ambient, copper wire (solid wire for smaller, and stranded wire for larger than 10 AWG) is used, consult applicable tables of the National Electric Code (ANSI/NFPA 70).
‡. Field convertible to 3 phase.
**. Single circuit application of F15 and F20 heaters requires single-point wiring kit accessory.
††. Field convertible to 1 phase, single or multiple supply circuit.

Table 14 – Field Multipoint Wiring or 24- and 30-kW Single Phase

FC Size	Motor FLA used	HEATER PART NO.	kW		PHASE	HEATER AMPS 208/230V			MIN AMPACITY 208/230V*			MIN WIRE SIZE (AWG) 208/230V†			MIN GND WIRE SIZE 208/230V	MAX FUSE/CKT BKR AMPS 208/230V		
			240V	208V		L1,L2	L3,L4	L5,L6	L1,L2	L3,L4	L5,L6	L1,L2	L3,L4	L5,L6		L1,L2	L3,L4	L5,L6
48-60	5.7	EHC25DHCF‡	24	18.0	1	28.5/31.5	28.5/31.5	28.5/31.5	43.3/47.0	35.6/39.4	35.6/39.4	8/8	8/8	8/8	10/10	50/50	40/40	40/40
48-60	5.7	EHC30DHCF‡	30	22.5	1	35.6/39.4	35.6/39.4	35.6/39.4	52.1/56.9	44.5/49.3	44.5/49.3	6/6	8/8	8/8	10/10	60/60	45/50	45/50

*. Includes blower motor amps of largest fan coil used with heater.
†. Copper wire must be used. If other than uncoated (non-plated), 75°C ambient, copper wire (solid wire for 10 AWG and smaller, stranded wire for larger than 10 AWG) is used, consult applicable tables of the NEC (ANSI/NFPA 70).
‡. Field convertible to 1 phase, single or multiple supply circuit.

Accessories

REQUIRED ACCESSORY

ITEM		ACCESSORY PART NO.*	FAN COIL SIZE USED WITH
1	Ion® Control with Wi-Fi® Remote Access Capability	SYST0101CW	All
	Ion® Communicating Relay Module (CRM)	SYST0101RM	All

ADDITIONAL ACCESSORIES

ITEM		ACCESSORY PART NO.*	FAN COIL SIZE USED WITH
2	Ion Series Smart Sensor	SYSTXZNSMS01	All
3	Ion Remote Room Sensor	SYSTXIIRRS01	All
4	Disconnect Kit	KFADK0301DSC	Cooling controls and heaters 3—10-kW
5	Downflow Base Kit	EBAC02NCB	24, 36
		EBAC03NCB	48
		EBAC04NCB	60
6	Downflow Conversion Kit	EBAC01DFS	Slope Coil Units—36
		EBAC02DFA	A-Coil Units—24, 48, 60
7	Single-Point Wiring Kit	EBAC01SPK	Only with 15- and 20-kW Fused Heaters
8	Filter	See Table 3 for filter dimension details	
9	Fan Coil Filter Cabinet (Fan Coil Filter Media)	AHIC0017A (FAIC0017A2)	24
		AHIC0021A (FAIC0021A2)	36, 48
		AHIC0024A (FAIC0024A2)	60
10	PVC Condensate Trap Kit (50 pack)	KFAET0150ETK	All
11	Air Cleaner 240-volt Conversion Kit	KEAVC0201240	All
12	Downflow/Horizontal Conversion Gasket Kit	EBAC01GSK	All
13	Horizontal Water Management Kit (25 pack)	NAMA00125HC	All
14	Door Gasket Kit **	1191140	All
15	Hydronic Heat Interface Relay Kit for Communicating Fan Coils	AFAINTHWC01A	All

* Factory authorized and listed, field installed.
**This kit is for replacement of factory installed gaskets if they are damaged or removed from the fan coil.

Accessory Kits Description Suggested and Required Use

1. **Ion Control with Integrated Wi-Fi**
   Deluxe programmable wall-mounted system control with integrated Wi-Fi.
   Ion Control
   Deluxe programmable wall-mounted system control without remote access.

2. Ion **Smart Sensor**
   Wall control used to monitor temperature and/or fan control.

   SUGGESTED USE: For use in zone systems.

3. Ion **Remote Room Sensor**
   Wired remote temperature sensor for zone control.

   SUGGESTED USE: For use in zone systems.

4. **Disconnect Kit**
   The kit is used to disconnect electrical power to the fan coil so service or maintenance may be performed safely.

   SUGGESTED USE: Units for 3- through 10-kW electric resistance heaters and cooling controls.

5. **Downflow Base Kit**
   This kit is designed to provide a 1-in. minimum clearance between unit discharge plenum, ductwork, and combustible materials. It also provides a gap-free seal with the floor.

   REQUIRED USE: This kit must be used whenever fan coils are used in downflow applications.

6. **Downflow Conversion Kit**
   Fan coils are shipped from the factory for upflow or horizontal-left applications. Downflow conversion kits provide proper condensate water drainage and support for the coil when used in downflow applications. Separate kits are available for slope coils and A-coils.

   REQUIRED USE: This kit must be used whenever fan coils are used in downflow applications.

7. **Single Point Wiring Kit**
   The single point wiring kit acts as a jumper between L1 and L3 lugs, and between the L2 and L4 lugs. This allows the installer to run 2 heavy-gauge, high-voltage wires into the fan coil rather than 4 light-gauge, high-voltage wires.

   SUGGESTED USE: Fan coils with 15- and 20-kW fused heaters only.

8. **Filter Kit (12 pack)**
   The kit consists of 12 fan coil framed filters. These filters collect large dust particles from the return air entering the fan coil and prevents them from collecting on the coil. This process helps to keep the coil clean, which increases heat transfer and, in turn, the efficiency of the system.

   SUGGESTED USE: To replace filters in fan coils.
   REQUIRED USE: All units unless a filter grille is used.

9. **Filter Media Cabinet and Cartridges**
   This cabinet is mounted to the fan coil on the return air end and designed to slip over the outer fan coil casing. The cabinets are insulated using the same insulation as production fan coils. They are designed for the removal of particulates from indoor air using FILXXFNC00(14, 17, 21, 24) media filter cartridges.

   SUGGESTED USE: All fan coils.

10. **PVC Condensate Drain Trap Kit**
    This kit consists of 50 PVC condensate traps. Each trap is pre-formed and ready for field installation. This deep trap helps the system make and hold proper condensate flow even during blower initiation.

    SUGGESTED USE: All fan coils.

11. **Air Cleaner 240-volt Conversion Kit**
    The AIRA electronic air cleaner comes ready for 115V operation.

    REQUIRED USE: This kit is required when running 240-volt circuit to air cleaner.

12. **Downflow/Horizontal Conversion Gasket Kit**
    This kit provides the proper gasketing of units when applied in either a downflow or horizontal application.

    REQUIRED USE: Fan coils in either downflow or horizontal applications.

13. **Horizontal Water Management Kit**
    This kit provides proper installation of fan coils under conditions of high static pressure and high relative humidity.

    SUGGESTED USE: All fan coils (except FE5A and FF1).

14. **Door Gasket Kit**
    This kit consists of specific adhesive-backed foam strips which are applied to the unit door and frame, limiting air leakage.

15. **Hydronic Heat Interface Relay Kit for Communicating Fan Coils**
    This kit provides an interface for coils with Hydronic Heat equipment. It includes a relay with rectifier circuit board, wiring harness pre-wired to the relay with a 12-pin plug to connect to the fan coil heater control, stripped leads, mounting parts and instructions.

    SUGGESTED USE: All communicating fan coils

© 2025 Carrier. All rights reserved.

Manufacturer reserves the right to change, at any time, specifications and designs without notice and without obligations.