Carrier®
HEATING & COOLING

Product Data

FG3A Air Conditioning Fan Coil

Sizes 024 thru 060

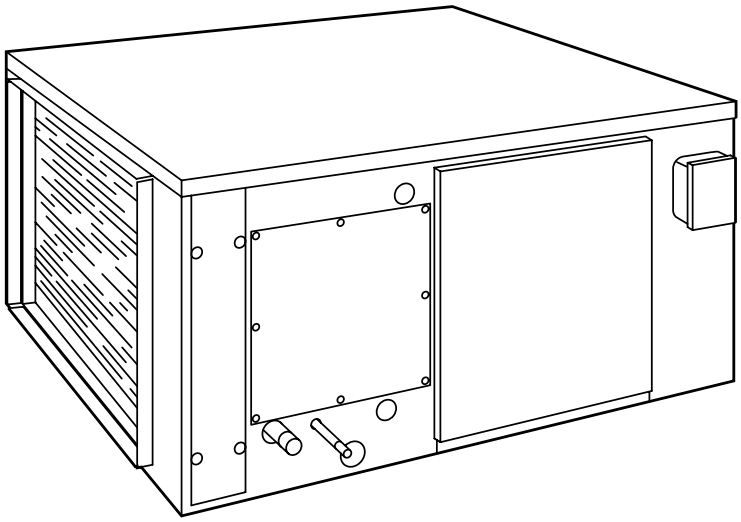

The Model FG3A Fan-Coil Unit is designed for light commercial applications, such as small stores, restaurants and office installations.

AVAILABLE OPTIONS

Designed for easy installation and service, the FG3A horizontal configuration is both accommodating and efficient. The unit can be installed above or below ceilings since overall height is only 18 or 22 in. depending on model choice. Spotwelded nuts at cabinet corners provide easy suspension from 3/8-16 NCV rods.

Belt-driven blowers can be adjusted to match air delivery requirements precisely to building needs. This unit lends itself to quiet air delivery with multi-room service. Forward curve blower wheels are factory balanced and have factory-lubricated ball bearings.

This unit is fully insulated with R-3, 3/4-in. fiberglass. The FG3A is overload protected with a PSC-type motor for quiet, economical operation. A 2-in. filter is a standard feature.

FIELD-INSTALLED ACCESSORIES

- 2-row hot water heating coil offers year-round duty through interface with central boiler system
- Expansion valve kit available through Service Parts
- 4-way adjustable plenum

NOTE: Field-supplied blower controls required. RCD Transformer/Relay Kit is P211-4014.

Copyright 2001 Carrier Corporation

Model number nomenclature

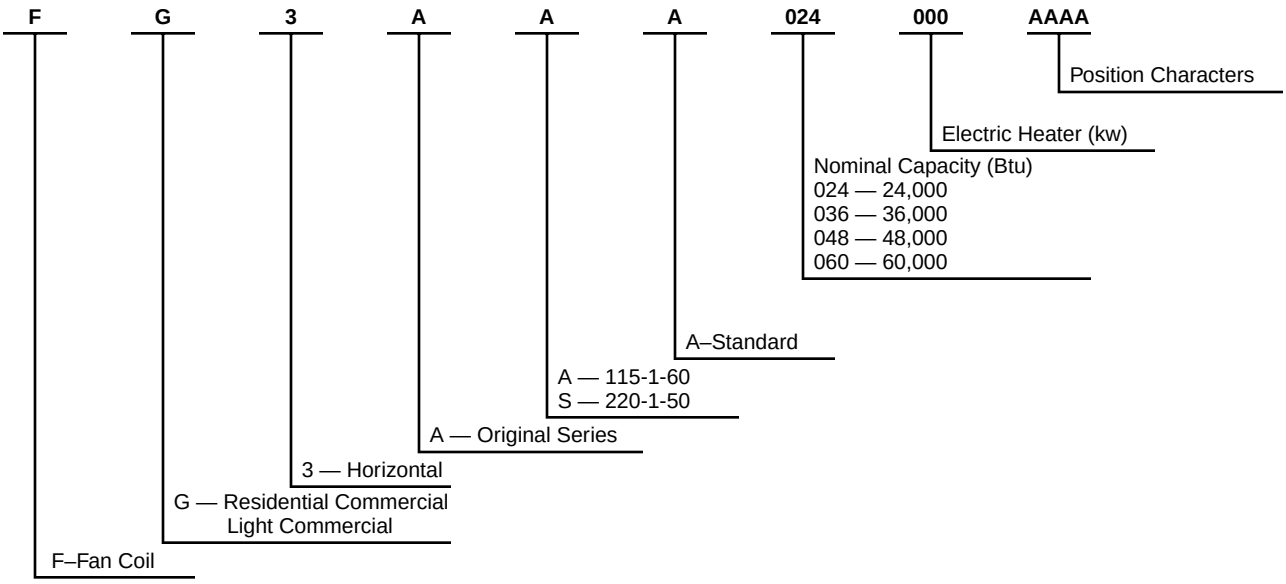

Physical data and dimensions

HOT WATER COIL

MODEL UNIT	HOT WATER COIL PART NO.	OVERALL WIDTH	OVERALL HEIGHT	OVERALL LENGTH*	FINNED WIDTH	FINNED HEIGHT	FINNED LENGTH	HEADER OD	UNIT STUBOUT†	WT (Lb)
FG3AAA024	KFCHW2401HWC	3-11/16	13-5/8	19-1/2	2-3/16	12-1/2	18	5/8	9	13
FG3AAA036	KFCHW3601HWC			29			27-1/2	7/8		16
FG3AAA048	KFCHW4801HWC		17-7/8	30-1/2		17-1/2	29		8-1/4	25
FG3AAA060	KFCHW6001HWC			37-1/2			36	1-1/8		28

* Does not include headers or stubouts. Ten fins/in. waffle fins and 1/2-in. tube on all models. 1/4-in. vent with cap 12 in. long.
† Distance from coil tube sheet to end of stub tube.

Dimensions

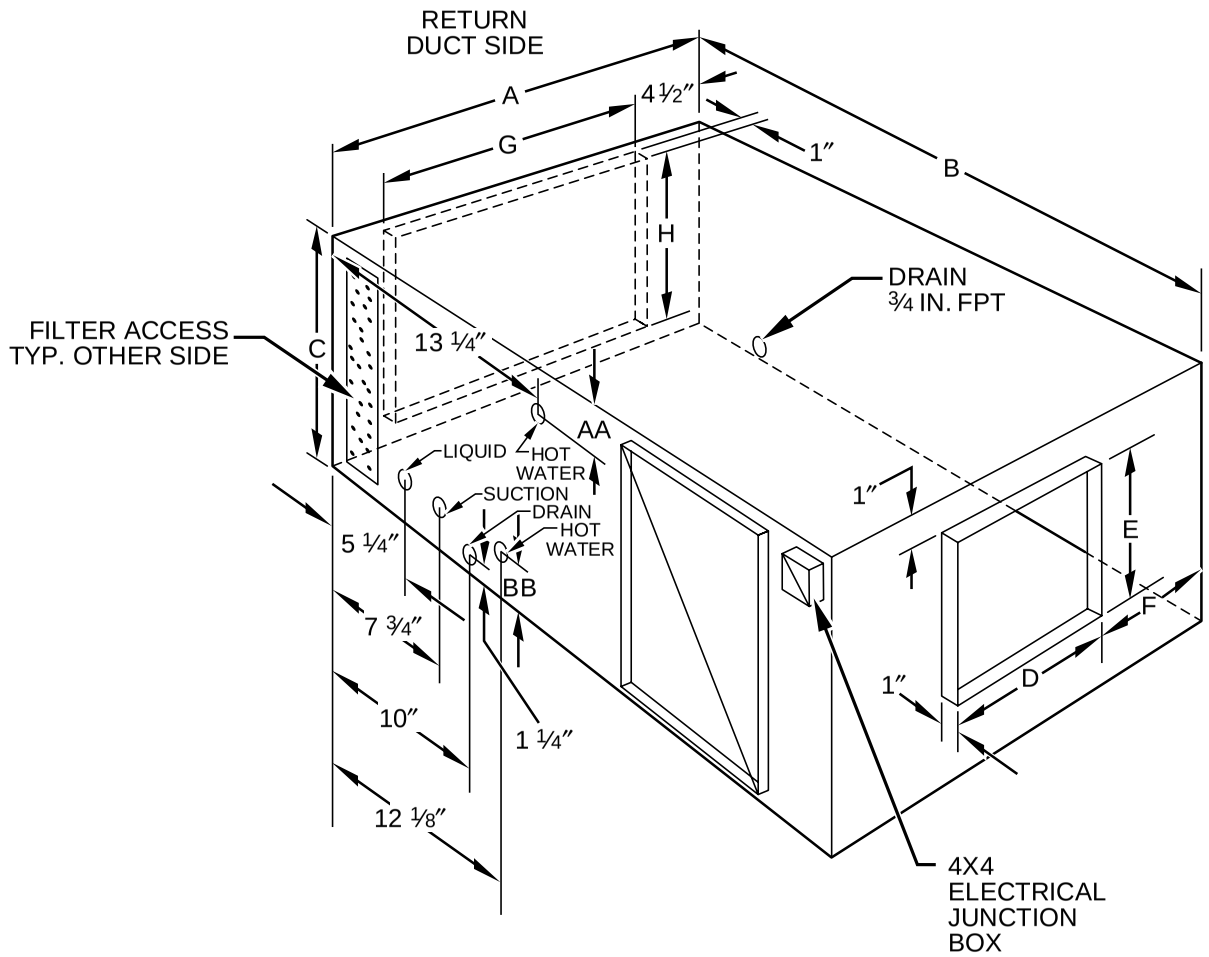

AA–2 ¾ IN., 2 IN. (048-060)
BB–3 ¾ IN., 3 ¼ IN. (048-060)

A96143

UNIT SIZE	DIMENSIONS			BLOWER OUTLET			RETURN DUCT	
	Width	Length	Height					
	A	B	C	D	E	F	G	H
024	27	37	18	14	14	6-1/2	18	16-1/4
036	36-1/2	37	18	15	15	10-3/4	27-1/2	16-1/4
048	38	39	22	16	16	11	29	20
060	45	42	22	18	18	13-1/2	36	20

Physical data

MODEL FG3A	024	036	048	060
ELECTRICAL DATA (50–60 Hz) Volts-Ph-Hz	115-1-60 220-1-50			
Blower Motor				
Amps, 60 Hz	4.8	6.2	8.9	
50 Hz	2.5	3.4	4.0	
NOMINAL CAPACITY (1000 Btuh)	24	36	48	60
OPER WT (Lb)	143	172	204	235
FRONT GRILLE PLENUM WT (Lb)	20	24	27	31
COOLING COIL	**3/8-In. OD copper tube**			
Rows	3			
Fins/In.	13			
Area (Sq Ft)	2.00	3.05	4.03	5.0
Face (In.)	16 x 18	16 x 27-1/2	20 x 29	20 x 36
HOT WATER COIL	**1/2-in. OD copper tube**			
Rows	2			
Fins/In.	10			
Area (Sq Ft)	1.56	2.38	3.52	4.37
Face (In.)	12-1/2 x 18	12-1/2 x 27-1/2	17-1/2 x 29	17-1/2 x 36
CONNECTIONS (OD)	5/8	7/8	7/8	1-1/8
FILTER DIMENSIONS	16 x 25	16 x 32	16 x 20 (2)	20 x 20 (2)
	2-in. thick			
REFRIGERANT	R-22			
ACCURATER® PISTON	59	70	84	90
CONNECTIONS (OD In.)				
Liquid (Flare)	3/8			
Suction (Sweat)	3/4		7/8	1-1/8
BLOWER (50–60 HZ)				
SPEEDS	Adjustable			
AIR DISCHARGE	Horizontal			
NOMINAL CFM	400 cfm/ton with wet coil			
DIMENSIONS H x W (In.)	9 x 9		10 x 10	12 x 12
BELT (In.)	38		41	48
MOTOR	Split Phase			
Sheave, Bore — PD (In.)	1/2 — 2.4–3.4		5/8 — 2.4–3/4	
Frame	48			
Rpm	1725			
Hp	1/4	1/3	1/2	
BLOWER SHEAVE				
Bore (In.)	3/4			
O.D. (In.)	6.25			8.25
BLOWER (50 Hz Only)				
Motor				
Sheave, Bore — PD (In.)	1/2 — 2.8–3.8		5/8 — 2.8–3.8	
Rpm	1425			

Performance data

FAN PERFORMANCE (60 Hz)

MODEL FG3A	INTERNAL STATIC PRESSURE	CFM	EXTERNAL STATIC PRESSURE (IN. WC)											
			.25		.50		.75		1.00		1.25		1.50	
			Rpm	Bhp	Rpm	Bhp	Rpm	Bhp	Rpm	Bhp	Rpm	Bhp	Rpm	Bhp
024	0.20	600	784	0.07	978	0.11	1139	0.15	1280	0.19	1407	0.23	1524	0.27
	0.26	700	833	0.09	1017	0.13	1173	0.18	1310	0.22	1434	0.26	1548	0.31
	0.33	800	892	0.11	1066	0.16	1217	0.21	1350	0.26	1471	0.31	1584	0.36
	0.40	900	937	0.15	1102	0.21	1246	0.27	1375	0.33	1493	0.39	1602	0.45
	0.46	1000	969	0.18	1127	0.25	1265	0.31	1390	0.38	1504	0.45	1611	0.51
036	0.23	900	806	0.11	994	0.16	1151	0.22	1290	0.27	1415	0.32	1530	0.38
	0.30	1050	855	0.16	1032	0.23	1182	0.30	1315	0.37	1436	0.44	1547	0.51
	0.37	1200	922	0.20	1092	0.29	1239	0.37	1370	0.45	1490	0.53	1601	0.61
	0.44	1350	1007	0.33	1176	0.44	1323	0.56	1455	0.68	1576	0.80	1689	0.92
	0.53	1500	1160	0.41	1333	0.55	1486	0.68	1625	0.81	1753	0.94	1872	1.07
048	0.31	1200	752	0.18	904	0.27	1034	0.35	1150	0.43	1255	0.51	1352	0.59
	0.40	1400	801	0.27	942	0.38	1065	0.48	1175	0.59	1276	0.70	1369	0.80
	0.49	1600	853	0.34	986	0.45	1104	0.57	1210	0.68	1308	0.79	1398	0.91
	0.58	1800	906	0.46	1033	0.60	1147	0.74	1250	0.88	1345	1.02	1434	1.16
	0.70	2000	987	0.63	1109	0.80	1219	0.96	1320	1.13	1414	1.30	1502	1.46
060	0.26	1500	611	0.17	746	0.26	860	0.34	960	0.43	1051	0.52	1135	0.60
	0.33	1750	647	0.26	774	0.37	883	0.48	980	0.59	1068	0.70	1150	0.81
	0.41	2000	688	0.36	807	0.50	912	0.63	1005	0.77	1090	0.91	1170	1.04
	0.50	2250	728	0.47	841	0.62	940	0.78	1030	0.93	1113	1.09	1189	1.24
	0.60	2500	780	0.63	887	0.82	983	1.00	1070	1.19	1151	1.38	1226	1.56

FAN PERFORMANCE (60 Hz) (With Hot Water Coil)

MODEL FG3A	INTERNAL STATIC PRESSURE	CFM	EXTERNAL STATIC PRESSURE (IN. WC)											
			.25		.50		.75		1.00		1.25		1.50	
			Rpm	Bhp	Rpm	Bhp	Rpm	Bhp	Rpm	Bhp	Rpm	Bhp	Rpm	Bhp
024	0.24	600	836	0.08	1027	0.12	1188	0.16	1330	0.20	1458	0.24	1575	0.28
	0.29	700	867	0.09	1049	0.13	1203	0.18	1340	0.22	1464	0.26	1578	0.31
	0.38	800	932	0.12	1102	0.17	1249	0.22	1380	0.27	1500	0.32	1611	0.37
	0.45	900	966	0.16	1125	0.22	1265	0.28	1390	0.34	1505	0.40	1612	0.46
	0.54	1000	1046	0.21	1200	0.27	1336	0.34	1460	0.40	1574	0.46	1680	0.53
036	0.29	900	848	0.13	1025	0.18	1176	0.24	1310	0.30	1431	0.36	1543	0.42
	0.37	1050	908	0.19	1076	0.26	1221	0.34	1350	0.41	1468	0.48	1577	0.56
	0.47	1200	980	0.24	1137	0.33	1275	0.41	1400	0.50	1514	0.59	1621	0.67
	0.56	1350	1095	0.34	1253	0.44	1393	0.55	1520	0.65	1637	0.75	1747	0.86
	0.67	1500	1247	0.41	1406	0.53	1549	0.64	1680	0.75	1801	0.86	1915	0.97
048	0.37	1200	790	0.20	936	0.29	1062	0.37	1175	0.45	1278	0.53	1373	0.61
	0.47	1400	843	0.30	979	0.40	1098	0.51	1205	0.61	1303	0.71	1395	0.82
	0.59	1600	909	0.40	1035	0.51	1148	0.63	1250	0.75	1345	0.87	1433	0.99
	0.71	1800	978	0.53	1098	0.67	1206	0.80	1305	0.94	1397	1.08	1484	1.21
	0.84	2000	1058	0.70	1173	0.86	1278	1.02	1375	1.18	1465	1.34	1551	1.50
060	0.32	1500	651	0.22	780	0.31	891	0.41	990	0.50	1080	0.59	1162	0.69
	0.43	1750	703	0.31	823	0.43	927	0.54	1020	0.66	1106	0.78	1185	0.89
	0.52	2000	747	0.43	860	0.56	960	0.70	1050	0.84	1133	0.98	1210	1.12
	0.63	2250	794	0.54	899	0.69	994	0.85	1080	1.00	1160	1.15	1235	1.31
	0.76	2500	848	0.69	948	0.86	1037	1.03	1120	1.20	1197	1.37	1269	1.54

Indicates that the BHP exceeds that of the supplied motor

Indicates that the RPM is possible with the sheaves supplied

No Shading: Indicates that the RPM is not possible with the sheaves supplied

Rpm — Revolutions per minute

Bhp — Brake horsepower

Performance data continued

FAN PERFORMANCE (50 Hz)

MODEL FG3A	INTERNAL STATIC PRESSURE	CFM	EXTERNAL STATIC PRESSURE (IN. WC)											
			.25		.50		.75		1.00		1.25		1.50	
			Rpm	Bhp	Rpm	Bhp	Rpm	Bhp	Rpm	Bhp	Rpm	Bhp	Rpm	Bhp
024	0.20	600	784	0.07	978	0.11	1139	0.15	1280	0.19	1407	0.23	1524	0.27
	0.26	700	833	0.09	1017	0.13	1173	0.18	1310	0.22	1434	0.26	1548	0.31
	0.33	800	892	0.11	1066	0.16	1217	0.21	1350	0.26	1471	0.31	1584	0.36
	0.40	900	937	0.15	1102	0.21	1246	0.27	1375	0.33	1493	0.39	1602	0.45
	0.46	1000	969	0.18	1127	0.25	1265	0.31	1390	0.38	1504	0.45	1611	0.51
036	0.23	900	806	0.11	994	0.16	1151	0.22	1290	0.27	1415	0.32	1530	0.38
	0.30	1050	855	0.16	1032	0.23	1182	0.30	1315	0.37	1436	0.44	1547	0.51
	0. 37	1200	922	0.20	1092	0.29	1239	0.37	1370	0.45	1490	0.53	1601	0.61
	0.44	1350	1007	0.33	1176	0.44	1323	0.56	1455	0.68	1576	0.80	1689	0.92
	0.53	1500	1160	0.41	1333	0.55	1486	0.68	1625	0.81	1753	0.94	1872	1.07
048	0.31	1200	752	0.18	904	0.27	1034	0.35	1150	0.43	1255	0.51	1352	0.59
	0.40	1400	801	0.27	942	0.38	1065	0.48	1175	0.59	1276	0.70	1369	0.80
	0.49	1600	853	0.34	986	0.45	1104	0.57	1210	0.68	1308	0.79	1398	0.91
	0.58	1800	906	0.46	1033	0.60	1147	0.74	1250	0.88	1345	1.02	1434	1.16
	0.70	2000	987	0.63	1109	0.80	1219	0.96	1320	1.13	1414	1.30	1502	1.46
060	0.26	1500	611	0.17	746	0.26	860	0.34	960	0.43	1051	0.52	1135	0.60
	0.33	1750	647	0.26	774	0.37	883	0.48	980	0.59	1068	0.70	1150	0.81
	0.41	2000	688	0.36	807	0.50	912	0.63	1005	0.77	1090	0.91	1170	1.04
	0.50	2250	728	0.47	841	0.62	940	0.78	1030	0.93	1113	1.09	1189	1.24
	0.60	2500	780	0.63	887	0.82	983	1.00	1070	1.19	1151	1.38	1226	1.56

FAN PERFORMANCE (50 Hz) (With Hot Water Coil)

MODEL FG3A	INTERNAL STATIC PRESSURE	CFM	EXTERNAL STATIC PRESSURE (IN. WC)											
			.25		.50		.75		1.00		1.25		1.50	
			Rpm	Bhp	Rpm	Bhp	Rpm	Bhp	Rpm	Bhp	Rpm	Bhp	Rpm	Bhp
024	0.24	600	836	0.08	1027	0.12	1188	0.16	1330	0.20	1458	0.24	1575	0.28
	0.29	700	867	0.09	1049	0.13	1203	0.18	1340	0.22	1464	0.26	1578	0.31
	0.38	800	932	0.12	1102	0.17	1249	0.22	1380	0.27	1500	0.32	1611	0.37
	0.45	900	966	0.16	1125	0.22	1265	0.28	1390	0.34	1505	0.40	1612	0.46
	0.54	1000	1046	0.21	1200	0.27	1336	0.34	1460	0.40	1574	0.46	1680	0.53
036	0.29	900	848	0.13	1025	0.18	1176	0.24	1310	0.30	1431	0.36	1543	0.42
	0.37	1050	908	0.19	1076	0.26	1221	0.34	1350	0.41	1468	0.48	1577	0.56
	0.47	1200	980	0.24	1137	0.33	1275	0.41	1400	0.50	1514	0.59	1621	0.67
	0.56	1350	1095	0.34	1253	0.44	1393	0.55	1520	0.65	1637	0.75	1747	0.86
	0.67	1500	1247	0.41	1406	0.53	1549	0.64	1680	0.75	1801	0.86	1915	0.97
048	0.37	1200	790	0.20	936	0.29	1062	0.37	1175	0.45	1278	0.53	1373	0.61
	0.47	1400	843	0.30	979	0.40	1098	0.51	1205	0.61	1303	0.71	1395	0.82
	0.59	1600	909	0.40	1035	0.51	1148	0.63	1250	0.75	1345	0.87	1433	0.99
	0.71	1800	978	0.53	1098	0.67	1206	0.80	1305	0.94	1397	1.08	1484	1.21
	0.84	2000	1058	0.70	1173	0.86	1278	1.02	1375	1.18	1465	1.34	1551	1.50
060	0.32	1500	651	0.22	780	0.31	891	0.41	990	0.50	1080	0.59	1162	0.69
	0.43	1750	703	0.31	823	0.43	927	0.54	1020	0.66	1106	0.78	1185	0.89
	0.52	2000	747	0.43	860	0.56	960	0.70	1050	0.84	1133	0.98	1210	1.12
	0.63	2250	794	0.54	899	0.69	994	0.85	1080	1.00	1160	1.15	1235	1.31
	0.76	2500	848	0.69	948	0.86	1037	1.03	1120	1.20	1197	1.37	1269	1.54

Indicates that the BHP exceeds that of the supplied motor

Indicates that the RPM is possible with the sheaves supplied

No Shading: Indicates that the RPM is not possible with the sheaves supplied

Rpm — Revolutions per minute

Bhp — Brake horsepower

NOTE: See outdoor unit pre-sale literature for cooling performance data with FG3A fan coils.

Performance data continued

COOLING CAPACITIES (MBtuh)

MODEL FG3A	EVAPORATOR AIR CFM AND BF	COIL REFRIGERANT TEMPERATURE (°F)*														
		35			40			45			50			55		
		Evap Air — Entering Wet-Bulb Temp (°F)														
		72	67	62	72	67	62	72	67	62	72	67	62	72	67	62
024	600	40	33	26	36	29	22	31	24	18	26	18	14	20	13	12
	0.07	19	20	21	17	18	19	15	16	17	13	14	14	11	12	12
	750	45	38	30	41	33	26	35	27	21	29	21	17	23	15	14
	0.09	21	23	25	19	21	23	17	19	20	15	16	17	13	14	14
	875	49	41	33	44	36	28	38	29	23	32	23	19	25	17	16
	0.10	23	26	28	21	23	25	19	21	23	16	18	19	14	16	16
036	800	56	46	37	50	40	31	44	33	24	36	26	19	28	18	16
	0.06	27	28	29	24	25	26	21	22	23	18	19	19	15	16	16
	900	61	50	40	55	43	33	47	36	27	39	28	21	30	20	18
	0.07	29	31	32	26	28	29	23	24	25	20	21	21	16	18	18
	1100	69	57	46	62	49	38	54	41	31	44	32	25	34	23	21
	0.08	32	35	37	29	32	34	26	28	30	23	25	25	19	21	21
	1300	75	62	50	68	54	42	59	45	34	49	35	29	38	25	24
	0.10	36	39	42	32	36	38	29	32	34	25	28	29	21	24	24
048	1200	76	64	52	68	56	44	60	47	36	50	37	29	40	27	24
	0.07	36	40	42	33	36	39	30	32	34	26	28	29	22	24	24
	1400	83	69	56	75	61	48	66	51	39	56	41	33	44	29	27
	0.08	39	44	47	36	40	43	32	36	38	29	32	33	24	27	27
	1600	88	74	61	80	65	52	71	55	43	60	44	36	47	32	30
	0.09	42	48	52	39	44	47	35	39	42	31	35	36	27	30	30
	1750	91	76	63	83	68	54	73	57	45	62	46	39	49	34	32
	0.10	44	50	55	40	46	50	37	42	45	33	37	39	28	32	32
060	1300	99	81	64	88	70	54	77	58	43	64	44	34	48	30	28
	0.06	47	49	52	42	44	46	37	39	40	31	33	34	26	27	28
	1600	113	93	74	101	80	62	87	66	49	72	51	41	55	36	34
	0.07	53	57	60	48	51	54	42	45	48	36	39	41	30	33	34
	1750	120	98	78	106	84	65	92	70	53	76	53	44	59	38	36
	0.08	56	61	64	50	54	58	44	48	51	38	41	44	32	35	36
	2000	129	105	85	115	91	71	99	75	57	81	58	48	63	42	40
	0.09	60	65	71	54	59	63	48	52	56	42	46	48	35	39	40

* Saturated suction leaving evaporator coil.

Sensible Heat Capacity (1000 Btuh)

BF — Bypass Factor

NOTES:

1. Net capacities shown include a deduction for evaporator fan motor heat.
2. Contact manufacturer for cooling capacities at conditions other than shown in table.
3. Formulas:

$$\text{Leaving db} = \text{entering db} - \frac{\text{sensible heat cap.}}{1.09 \times \text{CFM}}$$

Leaving wb = wb corresponding to enthalpy of air leaving coil (h_{wb})

$$h_{wb} = h_{ewb} - \frac{\text{total capacity (Btuh)}}{4.5 \times \text{CFM}}$$

where h_{ewb} = enthalpy of air entering coil.

4. Direct interpolation is permissible. Do not extrapolate.
5. SHC is based on 80°F dg temperature of air entering coil. Below 80°F subtract (correction factor x CFM) from SHC.

   Above 80°F db, add (correction factor x CFM) to SHC.

SHC CORRECTION FACTOR

BYPASS FACTOR	ENTERING AIR DRY-BULB TEMPERATURE (°F)					
	79	78	77	76	75	Under 75
	81	82	83	84	84	Over 85
	Correction Factor					
0.10	0.98	1.96	2.94	3.92	4.91	Use formula shown below
0.20	0.87	1.74	2.62	3.49	4.36	
0.30	0.76	1.53	2.29	3.05	3.82	

Interpolation is permissible.

Correction Factor = 1.09 x (1 – BF) x (db – 80)

Performance data continued

HEATING CAPACITIES* (Hot Water Coil)

GPM	PD (FT)	180°F ENTERING WATER TEMPERATURE								
		TTL MBH	LAT °F	WT °F	TTL MBH	LAT °F	LWT °F	TTL MBH	LAT °F	LWT °F
FG3A024		**600 CFM**			**800 CFM**			**1000 CFM**		
2.0	1.30	32.2	109.7	147.0	36.4	102.1	142.8	39.5	96.6	139.6
4.0	5.20	36.2	116.0	161.4	41.5	108.4	158.6	46.0	102.8	156.3
6.0	11.70	37.5	118.4	167.0	44.0	110.9	165.0	49.0	105.4	163.2
FG3A036		**900 CFM**			**1200 CFM**			**1500 CFM**		
3.0	1.10	49.0	110.3	146.6	55.0	102.6	142.4	60.0	97.1	139.0
6.0	4.10	55.0	116.8	161.1	63.5	109.1	158.3	70.0	103.5	155.9
9.0	9.00	57.5	119.3	166.9	67.0	111.7	164.7	75.0	106.2	162.9
FG3A048		**1200 CFM**			**1600 CFM**			**2000 CFM**		
4.0	0.80	66.0	111.4	145.9	75.0	103.5	141.6	82.0	97.9	138.2
8.0	3.00	75.0	118.4	160.6	87.0	110.6	157.6	97.0	104.9	155.2
12.0	6.70	79.0	121.2	166.4	92.0	113.5	164.2	103.0	107.8	162.3
FG3A060		**1500 CFM**			**2000 CFM**			**2500 CFM**		
6.0	0.70	86.0	112.9	150.7	97.0	105.0	146.8	106.0	99.4	143.7
12.0	2.70	96.0	119.4	163.5	111.0	111.6	160.9	124.0	105.9	158.8
18.0	6.00	100.0	121.9	168.6	117.0	114.2	166.6	131.0	108.6	165.1

* Based on 60°F entering air.
CAP — Capacity (1000 Btuh)
GPM — Gallons per Minute
PD — Pressure Drop (ft)
TTL — Total (MBH–1000 Btu/h)
LAT — Leaving Air Temperature
LWT — Leaving Water Temperature

HEATING CORRECTION FACTORS*

ENTERING AIR TEMP (°F)	ENTERING WATER TEMP (°F)								
	100	110	120	130	140	150	160	170	180
50	0.419	0.500	0.579	0.665	0.742	0.838	0.917	1.000	1.090
55	0.376	0.460	0.544	0.629	0.708	0.791	0.873	0.963	1.048
60	0.335	0.419	0.500	0.579	0.665	0.742	0.838	0.917	1.000
65	0.290	0.376	0.460	0.544	0.629	0.708	0.791	0.873	0.963
70	0.251	0.335	0.419	0.500	0.579	0.665	0.742	0.838	0.917
75	0.205	0.290	0.376	0.460	0.544	0.629	0.708	0.791	0.873
80	0.167	0.251	0.335	0.419	0.500	0.579	0.665	0.742	0.838

* For entering air and water temperatures not shown in capacity table, multiply factor times the 180°F entering water capacity. *Units not recommended for appliucations with leaving air exceeding 130 °F.*

ESTIMATED SOUND POWER LEVELS — FG3A

FG3A SIZE	CFM	EXT STATIC PRESSURE	OCTAVE BAND CENTER FREQUENCY						
			63	125	250	500	1000	2000	4000
024	800	0.25	69.1	65.1	61.1	58.1	56.1	54.1	50.1
024	800	0.75	75.6	71.6	67.6	64.6	62.6	60.6	56.6
024 & 036	1000	0.25	70.1	66.1	62.1	59.1	57.1	55.1	51.1
024 & 036	1000	0.75	76.6	72.6	68.6	65.6	63.6	61.6	57.6
036	1200	0.25	70.9	66.9	62.9	59.9	57.9	55.9	51.9
036	1200	0.75	77.3	73.3	69.3	66.3	64.3	62.3	58.3
036 & 048	1400	0.25	71.5	67.5	63.5	60.5	58.5	56.5	52.5
036 & 048	1400	0.75	78.0	74.0	70.0	67.0	65.0	63.0	59.0
048	1600	0.25	72.1	68.1	64.1	61.1	59.1	57.1	53.1
048	1600	0.75	78.6	74.6	70.6	67.6	65.6	63.6	59.6
060	2000	0.25	73.1	69.1	65.1	62.1	60.1	58.1	54.1
060	2000	0.75	79.6	75.6	71.6	68.6	66.6	64.6	60.6

NOTE: Sound Power dB re: 1pW

Printed on recycled paper.

Carrier Corporation • Syracuse, New York 13221 10-01

UNITED TECHNOLOGIES CARRIER

Manufacturer reserves the right to discontinue, or change at any time, specifications or designs without notice and without incurring obligations.