ENGLISH

Configuration Manual

FOR INT-DMS-770-004

Version 1.0.5
Publication date 2025-04-16

Copyright © 2025 Intesis

Disclaimer

The information in this document is for informational purposes only. Please inform HMS Networks of any inaccuracies or omissions found in this document. HMS Networks disclaims any responsibility or liability for any errors that may appear in this document.

HMS Networks reserves the right to modify its products in line with its policy of continuous product development. The information in this document shall therefore not be construed as a commitment on the part of HMS Networks and is subject to change without notice. HMS Networks makes no commitment to update or keep current the information in this document.

The data, examples and illustrations found in this document are included for illustrative purposes and are only intended to help improve understanding of the functionality and handling of the product. In view of the wide range of possible applications of the product, and because of the many variables and requirements associated with any particular implementation, HMS Networks cannot assume responsibility or liability for actual use based on the data, examples or illustrations included in this document nor for any damages incurred during installation of the product. Those responsible for the use of the product must acquire sufficient knowledge in order to ensure that the product is used correctly in their specific application and that the application meets all performance and safety requirements including any applicable laws, regulations, codes and standards. Further, HMS Networks will under no circumstances assume liability or responsibility for any problems that may arise as a result from the use of undocumented features or functional side effects found outside the documented scope of the product. The effects caused by any direct or indirect use of such aspects of the product are undefined and may include e.g. compatibility issues and stability issues.

Table of Contents

1. Description and Order Codes 1

2. Licensing 2

3. General Information 3

3.1. Intended Use of the Configuration Manual 3
3.2. General Safety Information 3
3.3. Admonition Messages and Symbols 4

4. Overview 5

4.1. Inside the Package 6
4.2. Main Features 6
4.3. Gateway General Functionality 7

5. Setup Procedure 8

6. Ductless Compatibility 9

7. Hardware 10

7.1. Mounting 10
7.2. Connection 12
7.2.1. Gateway Connectors 12
7.2.2. Connection to the Power Supply 14
7.2.3. Connection to the AC Unit 14
7.2.4. Connection to BACnet 15
7.2.5. Connection to Modbus 16
7.2.6. Connection to KNX 17
7.2.7. Connection to Home Automation 17
7.2.8. Connection to a PC for Configuration 17
7.2.9. Connection to Energy Meters (Digital Inputs) 18
7.3. Gateway Layout 19
7.4. LED Indicators 20
7.5. DIP Switches 21
7.6. Push Button 21
7.7. Technical Specifications 22
7.8. Dimensions 23

8. Available Protocol Combinations 24

8.1. Integration into BACnet Systems 24
8.1.1. BACnet Objects 24
8.2. Integration into Modbus Systems 27
8.2.1. Modbus Registers 27
8.3. Integration into KNX Systems 29
8.3.1. KNX Signals 29
8.4. Integration into Home Automation Systems 34
8.4.1. Home Automation Signals 34

9. Field Configuration: Change the Gateway's Protocol 35

10. Error Codes 36

1. Description and Order Codes

INT-DMS-770-004 Gateway.

BACnet®, Modbus®, KNX®, and Home Automation gateway for ductless air conditioning systems.

You can set up this Intesis gateway for BACnet/IP, BACnet MS/TP, Modbus TCP, Modbus RTU, KNX TP, or Home Automation.

PART NUMBER	HMS ORDER CODE
INT-DMS-770-004	IN770BPIXXSO038

2. Licensing

Distribution license(s) for the INT-DMS-770-004 gateway:

Part Number	License	Maximum AC units	
		Indoor units	Outdoor units
INT-DMS-770-004	XXS	4	0

3. General Information

3.1. Intended Use of the Configuration Manual

This manual contains the main features of this Intesis gateway and the instructions for its appropriate installation, configuration, and operation.

Any person who installs, configures, or operates this gateway or any associated equipment should be aware of this manual's contents.

Keep this manual for future reference during the installation, configuration, and operation.

3.2. General Safety Information

IMPORTANT
Follow these instructions carefully. Improper work may seriously harm your health and damage the gateway and/or any other equipment connected to it.

Only technical personnel, following these instructions and the country legislation for installing electrical equipment, can install and manipulate this gateway.

Install this gateway indoors, in a restricted access location, avoiding exposure to direct solar radiation, water, high relative humidity, or dust.

Preferably mount this gateway on a DIN rail in a grounded metal cabinet, following this manual's instructions.

If mounting on a wall, firmly fix this gateway on a non-vibrating surface, following the instructions in this manual.

All wires (for communication and power supply, if needed) must only be connected to networks with indoor wiring. All communication ports are considered for indoor use and must only be connected to SELV circuits.

Disconnect all systems from power before manipulating and connecting them to the gateway.

Use SELV-rated NEC class 2 or limited power source (LPS) power supply.

CAUTION
To avoid earth loops that can damage the gateway and/or any other equipment connected to it, we strongly recommend the use of DC power supplies, floating or with the negative terminal connected to earth. **Never use a DC power supply with a positive terminal connected to earth**.

Use a circuit breaker between the gateway and the power supply. Rating: 250 V, 6 A.

Power the gateway with the correct voltage. The admitted range is detailed in the technical specifications table.

Respect the expected polarity of power and communication cables when connecting them to the gateway.

This Intesis gateway is designed for installation in an enclosure. When the device is mounted outside an enclosure, precautions should be taken to avoid electrostatic discharges to the unit in environments with static levels above 4 kV. When working in an enclosure (e.g., making adjustments, setting switches, etc.), typical anti-static precautions should be observed before touching the unit.

Binary inputs, if present, are potential-free contact. Do not connect any voltage.

These safety instructions in other languages can be found here.

3.3. Admonition Messages and Symbols

CAUTION
Instruction that must be followed to avoid a potentially hazardous situation that, if not avoided, could result in minor or moderate injury.

IMPORTANT
Instruction that must be followed to avoid a risk of reduced functionality and/or damage to the equipment or to avoid a network security risk.

NOTE
Additional information which may facilitate installation and/or operation.

TIP
Helpful advice and suggestions.

NOTICE
Remarkable Information.

4. Overview

This INT-DMS-770-004 gateway supports four combinations.

Gateway's client interface	↔	Gateway's server interface
Ductless HVAC systems	to	BACnet/IP or MS/TP
		Modbus TCP and RTU
		KNX TP
		Home Automation

IMPORTANT
This document assumes that the user is familiar with these technologies.

Figure 1. Integration of ductless units into BACnet systems

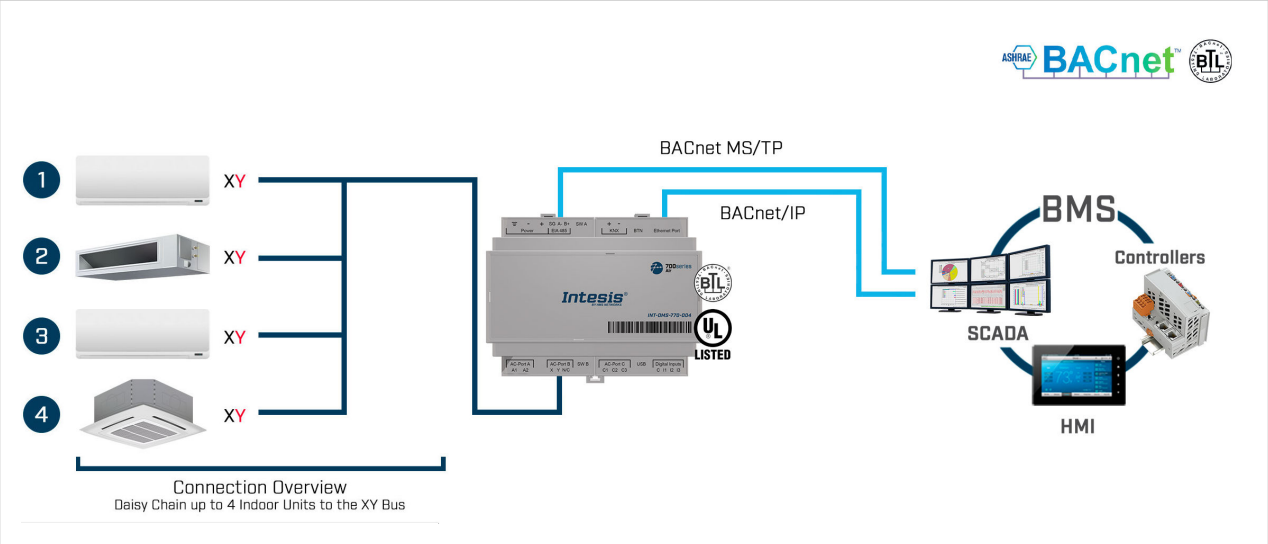

Figure 2. Integration of ductless units into Modbus systems

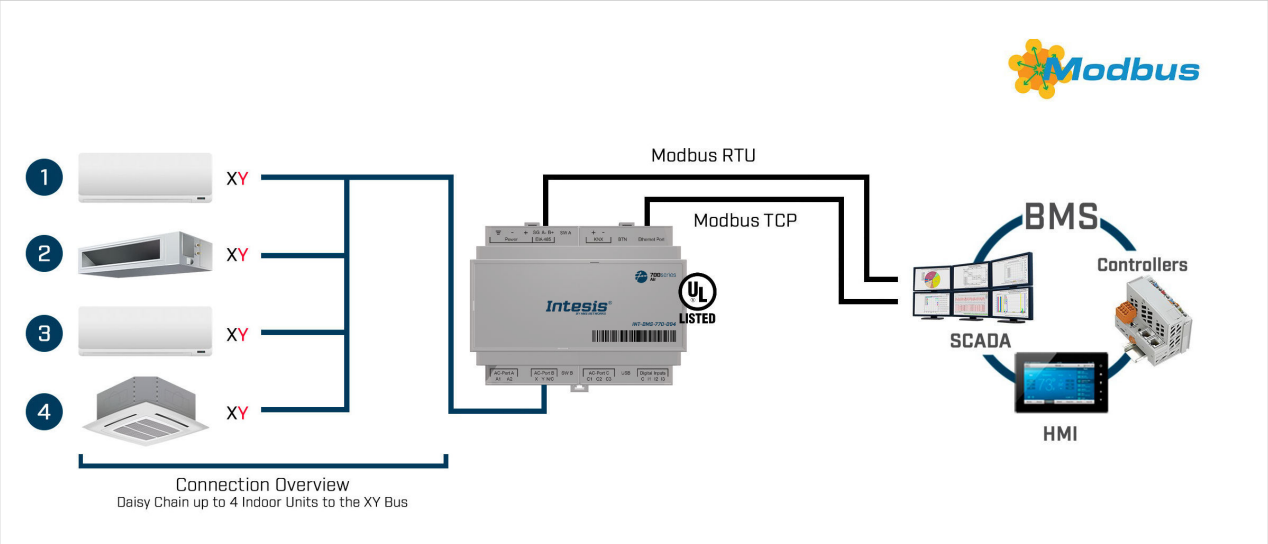

Figure 3. Integration of ductless units into KNX TP systems

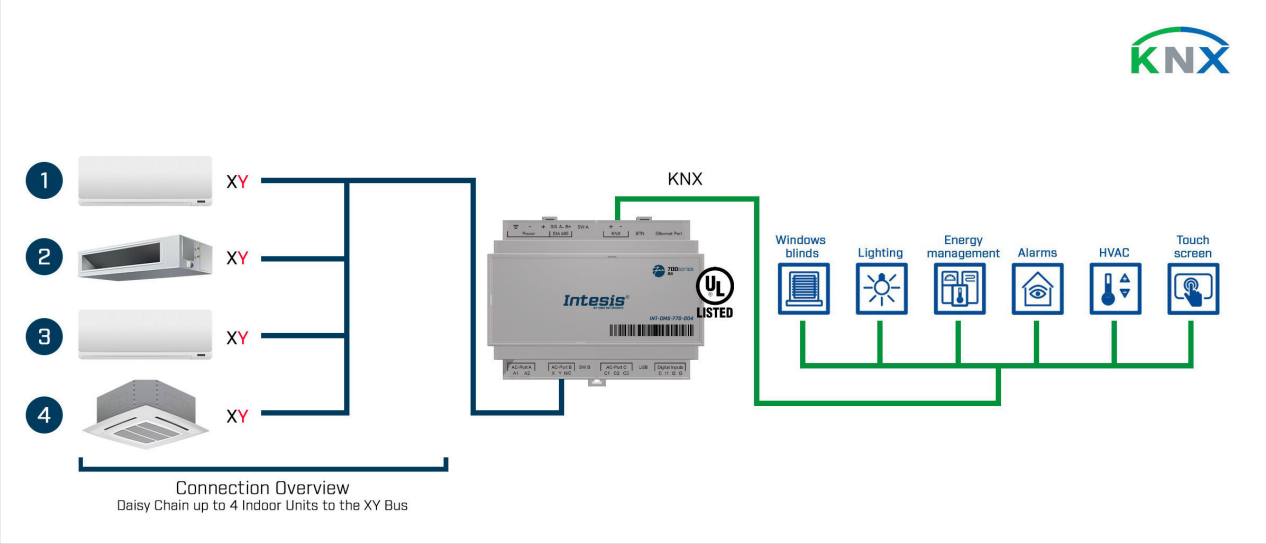

Figure 4. Integration of ductless units into Home Automation systems

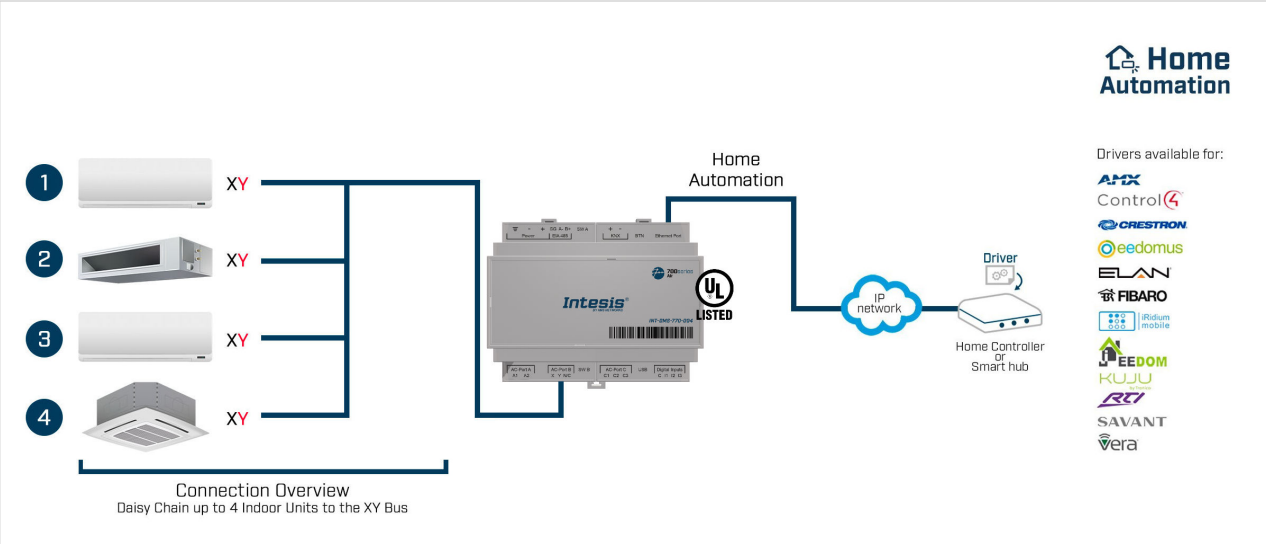

4.1. Inside the Package

ITEMS INCLUDED

- Intesis INT-DMS-770-004 Gateway
- USB Mini-B type to USB Type-A cable
- Installation guide

4.2. Main Features

- Several protocol combinations available: Configurable for BACnet/IP and MS/TP, Modbus TCP and RTU, KNX TP, and Home Automation communication protocols.
- Field configuration: Change between protocol combinations easily.
- Scan function: Find the AC units connected to the air conditioning bus.

- 2 x DIP switches for the EIA-485 connector termination and polarization configuration.
- 14 LEDs indicate the operating status for both the gateway and the communication bus.
- DIN rail and wall mounting case.
- Accredited with the main certifications for electronic equipment.
- Three binary inputs to integrate energy meters.
- Multiple ports for serial and TCP/IP communication:
  - Green pluggable terminal block for EIA-485 (3 poles)
  - Orange pluggable terminal block for KNX (2 poles)
  - Ethernet
  - Green pluggable terminal block for binary inputs (4 poles)
  - USB Mini-B type 2.0 port for connection to the PC
  - Green pluggable terminal block for AC connection (2 poles)
  - Green pluggable terminal block for AC connection (3 poles)
  - Green pluggable terminal block for AC connection (3 poles)

4.3. Gateway General Functionality

With this Intesis INT-DMS-770-004 gateway, you can easily integrate ductless HVAC systems into an installation based on BACnet/IP, BACnet MS/TP, Modbus TCP, Modbus RTU, KNX TP, or Home Automation. To do so, the gateway acts as a server device of the installation itself, accessing all signals from each unit and allowing control of the whole HVAC network.

The gateway continuously polls the HVAC network, storing in its memory the current status of every signal you want to track and serving this data to the installation when requested. When a signal status changes, the gateway communicates it to the installation, waits for the response, and performs the corresponding action.

A signal's lack of response activates a communication error, allowing you to determine which signal from which unit is not working correctly.

5. Setup Procedure

NOTE
This setup overview covers the BACnet application. For more information on the other applications, see the corresponding sections on Connection (page 12).

1. Install Intesis MAPS on your laptop. Use the setup program supplied and follow the instructions given by the installation wizard.
2. Install the gateway at the desired installation site. The gateway can be installed on a DIN rail or on a stable, non-vibrating surface. DIN rail mounted inside a metallic industrial cabinet connected to ground is recommended.
3. If using BACnet/IP, connect the communication cable coming from the BACnet/IP network to the port marked as **Ethernet** on the gateway. See more connection details in Gateway Connectors (page 12).
   If using BACnet MS/TP, connect the communication cables coming from the BACnet MS/TP network to the port marked as **EIA 485** on the gateway.
4. Connect the communication cable from the ductless indoor unit to the **AC-Port B** connector on the gateway.
5. Power up the gateway. The supply voltage can be from 12 to 36 VDC. Observe the polarity.

   WARNING
   To avoid earth loops that can damage the gateway and/or any other equipment connected to it, we strongly recommend the use of DC power supplies, floating or with the negative terminal connected to earth. **Never use a DC power supply with a positive terminal connected to earth**.

6. To connect over IP, connect an Ethernet cable from the laptop to the **Ethernet** port on the gateway.
   To connect via USB, connect a USB cable from the laptop to the **Console** port on the gateway.
7. Open Intesis MAPS and create a new project selecting the **IN-BAC-CAR** project template.
8. Modify the configuration as needed, save it, and send the configuration file to the gateway, as explained in the MAPS Configuration Guide.
9. Go to the Diagnostic section and check for communication activity and some TX and RX frames. If that is the case, the communication between the BACnet manager device and the ductless installation is OK. If there is no communication activity between the gateway and the BACnet or ductless units, check that those are operative, the cables used to connect all devices and any other communication parameters.

Figure 5. Intesis MAPS Diagnostic tab

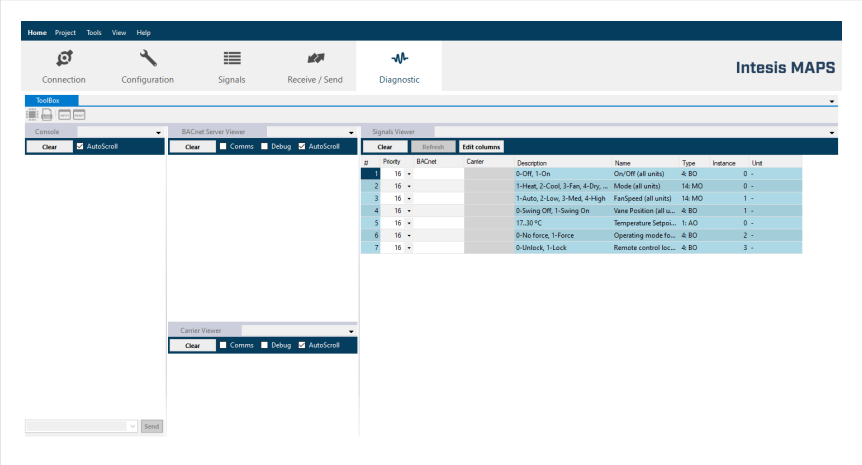

6. Ductless Compatibility

FOR MODEL COMPATIBILITY:

Please refer to current PMB titled **"Ductless BACnet 1:1 & 4:1 Gateway Compatibility for Bryant and Payne"**.

FOR MODEL COMPATIBILITY:

Please refer to current PMB titled **"Ductless BACnet 1:1 & 4:1 Gateway Compatibility for ICP"**.

7. Hardware

7.1. Mounting

IMPORTANT
Before mounting, please ensure that the chosen installation place preserves the gateway from direct solar radiation, water, high relative humidity, or dust.

NOTE
Mount the gateway on a wall or over a DIN rail. We recommend the DIN rail mounting option, preferably inside a grounded metallic industrial cabinet.

IMPORTANT
Ensure the gateway has sufficient clearances for all connections when mounted. See Dimensions (page 23).

WALL MOUNTING

IMPORTANT
For reasons of security, the maximum height for wall mounting is two meters (6.5 feet).

1. Press the top-side mobile clips in the rear panel until you hear a *click*.

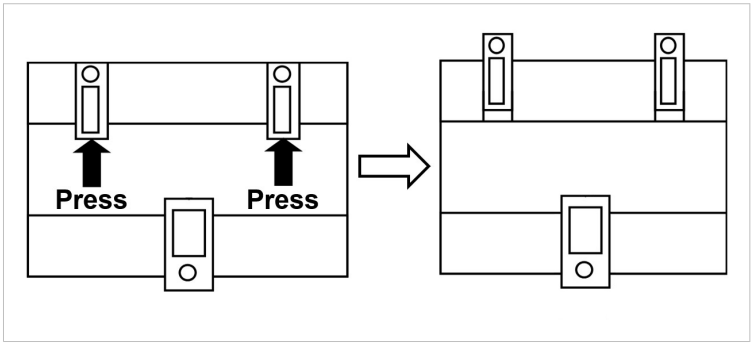

2. Use the clip holes to fix the gateway on the wall using screws.

   NOTE
   Use M3 screws, 25 mm (1") length.

3. Make sure the gateway is firmly fixed.

DIN RAIL MOUNTING

Keep the clips in their original position.

1. Fit the gateway's top-side clips in the upper edge of the DIN rail.
2. Press the low side of the gateway gently to lock it in the DIN rail.
3. Make sure the gateway is firmly fixed.

NOTE
For some DIN rails, to complete step 2, you may need a small screwdriver or similar to pull the bottom clip down.

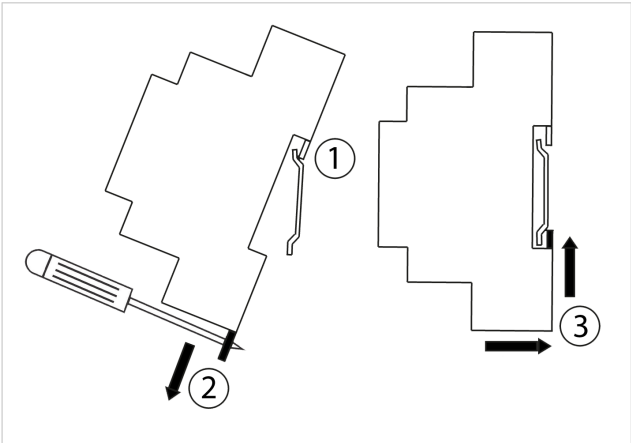

7.2. Connection

CAUTION
Disconnect all systems from power before manipulating and connecting them to the gateway.

IMPORTANT
Keep communication cables away from power and ground wires.

7.2.1. Gateway Connectors

Figure 6. Wiring diagram

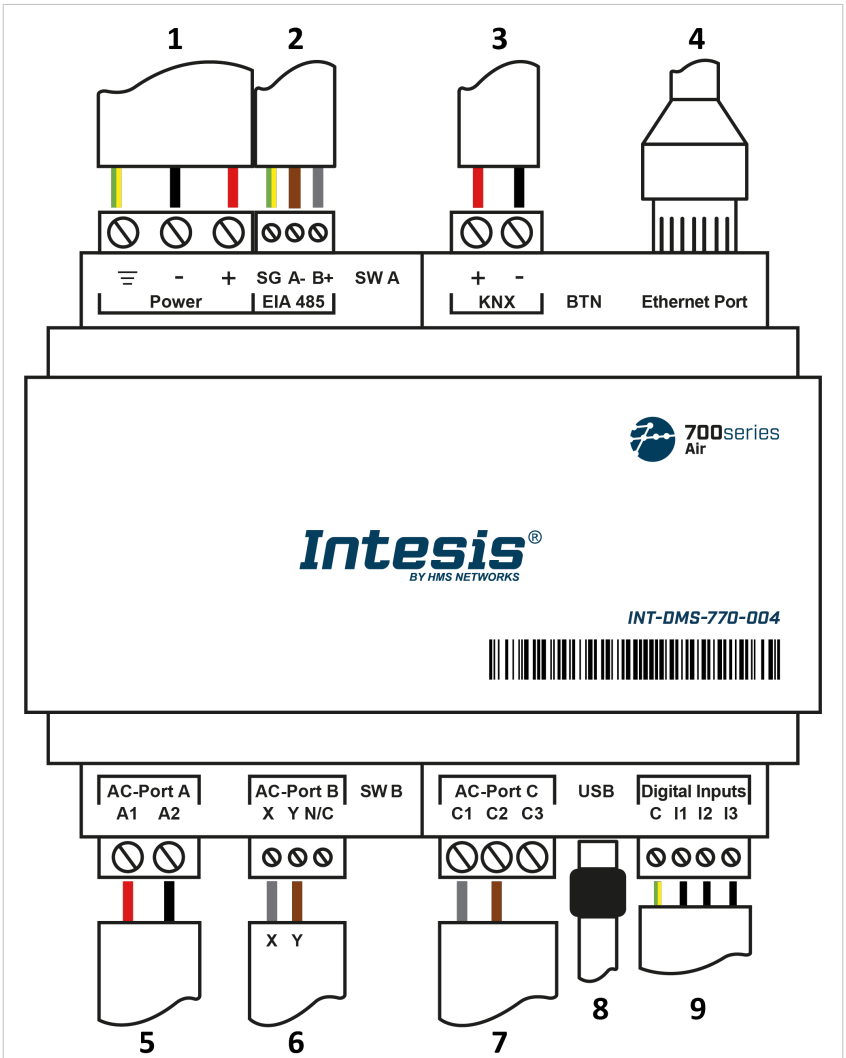

1. **Power Supply** (12-36 VDC)
2. **Port EIA-485**
3. **Port KNX**
4. **Ethernet**
5. **Not used**
6. **Ductless: X/Y**
7. **Not used**
8. **Console**
9. **Binary inputs (dry contact)** optional

WIRING THE CONNECTORS

IMPORTANT
For all connectors, use solid or stranded wires (twisted or with ferrule).

Cross-section/gauge per terminal:

- One core: 0.2 .. 2.5 mm^2 / 24 .. 11 AWG
- Two cores: 0.2 .. 1.5 mm^2 / 24 .. 15 AWG
- Three cores: Not permitted

NOTE
To know more about each port's specifications, see Technical Specifications (page 22).

TIP
- Mount the gateway in the desired place before wiring it.
- Terminal block connectors can be unplugged to facilitate the wiring process.

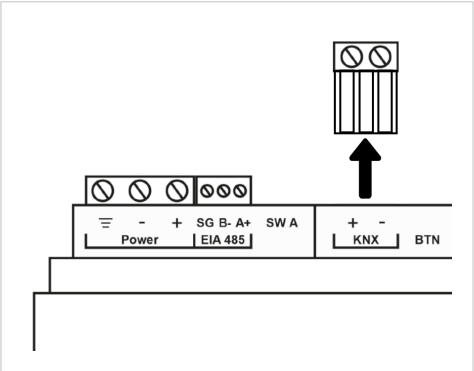

COMMUNICATION PORTS

PORT	USAGE	WIRING			
EIA-485	BACnet MS/TP and Modbus RTU	**SG**: Signal ground	**A-**	**B+**	
KNX	KNX bus	**+**		**-**	
Ethernet	**As an IP/TCP port**: BACnet/IP, Modbus TCP, and Home Automation **As a console port**: Connection to a PC for configuration purposes	Ethernet cable (CAT5 or higher) When using the building LAN, contact the network administrator and make sure traffic is allowed. When starting up the gateway for the first time, DHCP will be enabled for 30 seconds. After that time, the default IP 192.168.100.246 will be set.			
AC-Port A	*Not used*				
AC-Port B Observe polarity	Ductless bus	**X**:X	**Y**: Y	**N/C**: *Not used*	
AC Port-C	*Not used*				
USB	Connection to a PC for configuration purposes	USB Mini-B type			
Digital Inputs	Dry contact for metering devices	**C**: Common	**I1**: Input 1	**I2**: Input 2	**I3**: Input 3

7.2.2. Connection to the Power Supply

The power supply connector is a green pluggable terminal block (three poles) labeled as **Power**.

Apply the voltage within the admitted range and of enough power:

- **DC**: 12 .. 36 VDC (±10%), Max: 250 mA

NOTE
Recommended voltage: 24 VDC, Max: 127 mA

IMPORTANT
Use a circuit breaker between the gateway and the power supply. Rating: 250 V, 6 A.

IMPORTANT
Respect the polarity labeled on the power connector for the positive and negative wires.

IMPORTANT
- Use SELV-rated NEC class 2 or limited power source (LPS) power supply.
- Respect the polarity.
- Connect the gateway's ground terminal ⏚ to the installation grounding.

IMPORTANT
To avoid earth loops that can damage the gateway and/or any other equipment connected to it, we strongly recommend the use of DC power supplies, floating or with the negative terminal connected to earth.

CAUTION
Never use a DC power supply with a positive terminal connected to earth.

7.2.3. Connection to the AC Unit

Connect the ductless air conditioning network bus (XY) to the gateway using the **X** and **Y** poles of the **AC-Port B**.

IMPORTANT
Observe polarity:

- **X**: X
- **Y**: Y
- ***N/C***: *Not used*

NOTE
See the Wiring diagram (page 12).

7.2.4. Connection to BACnet

FOR BACNET/IP

Connect the BACnet/IP Ethernet cable to the gateway's **Ethernet Port**. The correct cable to use depends on where the gateway is connected:

- **Connecting directly to a BACnet/IP device:** use a crossover Ethernet UTP/FTP CAT5 or higher cable.
- **Connecting to a hub or switch of the LAN of the building:** use a straight Ethernet UTP/FTP CAT5 or higher cable.

NOTE
When commissioning the gateway for the first time, DHCP will be enabled for 30 seconds. During that time, if there is a DHCP server, an IP address will be automatically assigned to the gateway. After that time, the default IP address 192.168.100.246 will be automatically set.

IMPORTANT
If communicating through the LAN of the building, contact the network administrator and make sure traffic on the used port is allowed through all LAN paths.

FOR BACNET MS/TP

Connect the BACnet MS/TP communication cable to the gateway's **EIA-485** port.

The connector for the EIA-485 bus is a green pluggable terminal block labeled **SG** (signal ground), **A-**, and **B+**.

IMPORTANT
Observe polarity.

IMPORTANT
Observe the standard restrictions of the EIA-485 bus:

- Maximum distance of 1200 meters (0.75 miles).
- Maximum of 32 devices connected to the bus.
- A 120 ohms (Ω) termination resistor is needed at each end of the bus. The gateway has an internal bus biasing circuit incorporating the termination resistor. It can be enabled using the DIP switch block (**SW A**) dedicated to the **EIA-485** port:
  Position 1
  - ON: 120 Ω termination active.
  - OFF: 120 Ω termination inactive.

  Positions 2 and 3
  - ON: Polarization active.
  - OFF: Polarization inactive.

  For further details, see DIP Switches (page 21).

To know more, refer to the document Polarity Issues in RS485 Networks.

IMPORTANT
When installing the gateway at the end of the bus with the termination resistor enabled, do not install an additional termination resistor at that end.

NOTE
See the Wiring diagram (page 12).

7.2.5. Connection to Modbus

FOR MODBUS TCP

Connect the Modbus TCP Ethernet cable to the gateway's **Ethernet Port**. The correct cable to use depends on where the gateway is connected:

- **Connecting directly to a Modbus TCP device:** use a crossover Ethernet UTP/FTP CAT5 or higher cable.
- **Connecting to a hub or switch of the LAN of the building:** use a straight Ethernet UTP/FTP CAT5 or higher cable.

NOTE
When commissioning the gateway for the first time, DHCP will be enabled for 30 seconds. During that time, if there is a DHCP server, an IP address will be automatically assigned to the gateway. After that time, the default IP address 192.168.100.246 will be automatically set.

IMPORTANT
If communicating through the LAN of the building, contact the network administrator and make sure traffic on the used port is allowed through all LAN paths.

FOR MODBUS RTU

Connect the Modbus RTU communication cable to the gateway's **EIA-485** port.

The connector for the EIA-485 bus is a green pluggable terminal block labeled **SG** (signal ground), **A-**, and **B+**.

IMPORTANT
Observe polarity.

IMPORTANT
Observe the standard restrictions of the EIA-485 bus:

- Maximum distance of 1200 meters (0.75 miles).
- Maximum of 32 devices connected to the bus.
- A 120 ohms (Ω) termination resistor is needed at each end of the bus. The gateway has an internal bus biasing circuit incorporating the termination resistor. It can be enabled using the DIP switch block (**SW A**) dedicated to the **EIA-485** port:
  Position 1
  - ON: 120 Ω termination active.
  - OFF: 120 Ω termination inactive.

  Positions 2 and 3
  - ON: Polarization active.
  - OFF: Polarization inactive.

  For further details, see DIP Switches (page 21).

To know more, refer to the document Polarity Issues in RS485 Networks.

IMPORTANT
When installing the gateway at the end of the bus with the termination resistor enabled, do not install an additional termination resistor at that end.

NOTE
See the Wiring diagram (page 12).

7.2.6. Connection to KNX

Connect the KNX TP communication cable to the gateway's **KNX port**.

IMPORTANT
Observe polarity.

NOTE
See the Wiring diagram (page 12).

7.2.7. Connection to Home Automation

Connect the Home Automation Ethernet cable to the gateway's **Ethernet Port**. The correct cable to use depends on where the gateway is connected:

- **Connecting directly to a Home Automation device:** use a crossover Ethernet UTP/FTP CAT5 or higher cable.
- **Connecting to a hub or switch of the LAN of the building:** use a straight Ethernet UTP/FTP CAT5 or higher cable.

NOTE
When commissioning the gateway for the first time, DHCP will be enabled for 30 seconds. During that time, if there is a DHCP server, an IP address will be automatically assigned to the gateway. After that time, the default IP address 192.168.100.246 will be automatically set.

IMPORTANT
If communicating through the LAN of the building, contact the network administrator and make sure traffic on the used port is allowed through all LAN paths.

NOTE
See the Wiring diagram (page 12).

7.2.8. Connection to a PC for Configuration

Use the supplied USB Mini-B type to USB Type-A cable to connect the gateway through its **USB** port to a PC to configure it with Intesis MAPS.

NOTE
You can use the **Ethernet Port** to connect the gateway and the PC instead.

NOTE
To know more about the gateway configuration, consult the Intesis MAPS guide for INT-DMS-770-004.

NOTE
See the Wiring diagram (page 12).

7.2.9. Connection to Energy Meters (Digital Inputs)

The **Digital Inputs** connector is a green pluggable terminal block (four poles) placed at the bottom right side of the gateway.

IMPORTANT
The **Digital Inputs** connector is a potential-free contact for energy metering only. It does not support any other kind of third-party elements.

NOTE
See the Wiring diagram (page 12).

7.3. Gateway Layout

Figure 7. Disposition of hardware elements in the gateway

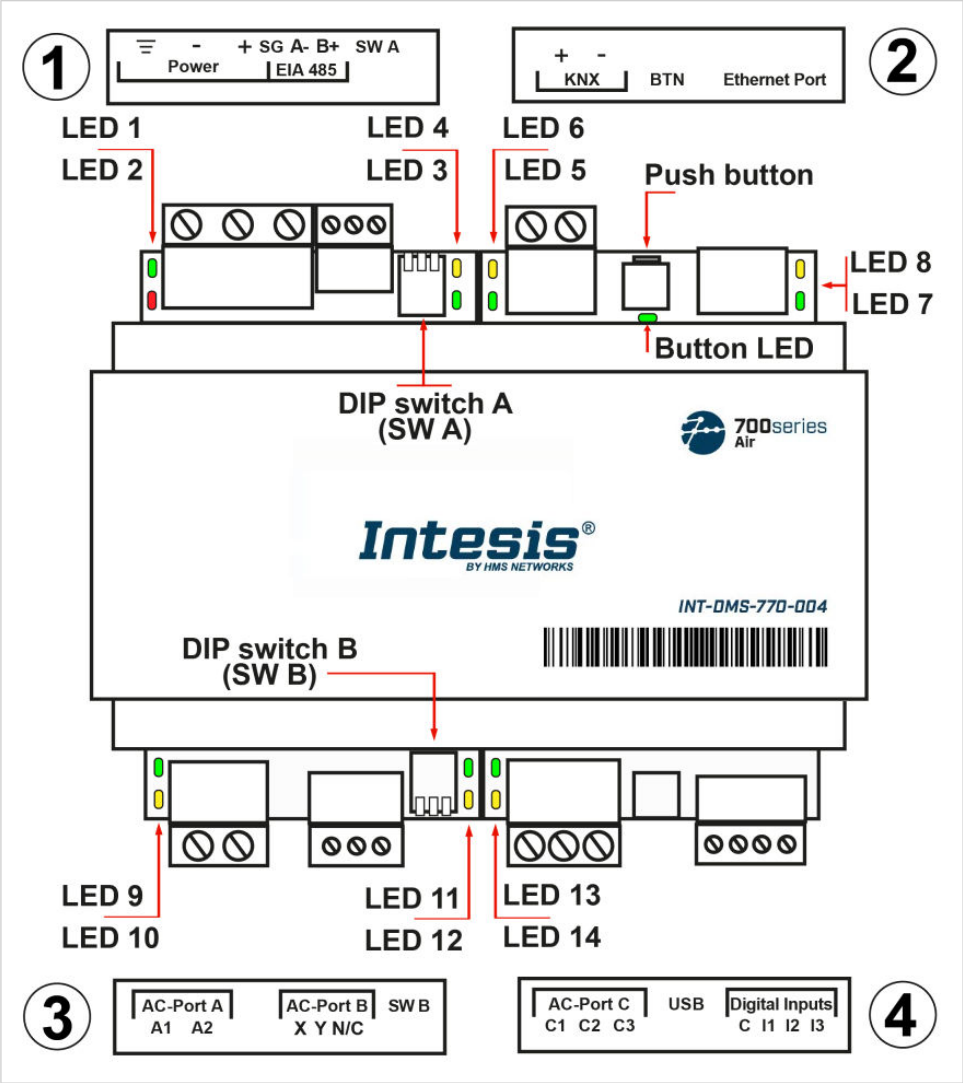

Plastic covers numbered in the image as ①, ②, ③, and ④ can be easily disassembled.

NOTE
LEDs and DIP switches are hidden behind the removable plastic covers and can only be accessed by disassembling the covers.

The following sections explain each element in more detail: LEDs, DIP switches, and the push button.

7.4. LED Indicators

Table 1. LEDs location and behavior

Cover	LED	Color	Description
Top side			
Under frontal cover ①	LED 1 (PWR)	Green	Power on (not programmable)
	LED 2 (ERR)	Red	Blinking: Hardware error
	LED 3	Green	485 Tx (RS485 for BACnet or Modbus)
	LED 4	Yellow	485 Rx (RS485 for BACnet or Modbus)
Under frontal cover ②	LED 5	Green	KNX Port Tx
	LED 6	Yellow	KNX Port Rx
	BUTTON LED	Green	**KNX**: Programming mode on **BACnet**: BACnet link established **Modbus** and **Home Automation**: Not used
	LED 7	Green	Ethernet link established
	LED 8	Yellow	Ethernet speed
Bottom side			
Under frontal cover ③	LED 9	Green	AC-Port A Tx (HBS)
	LED 10	Yellow	AC-Port A Rx (HBS)
	LED 11	Green	AC-Port B Tx (RS485)
	LED 12	Yellow	AC-Port B Rx (RS485)
Under frontal cover ④	LED 13	Green	AC-Port C Tx (UFO-SLQ)
	LED 14	Yellow	AC-Port C Rx (UFO-SLQ)

NOTE
LEDs are hidden behind the four frontal labeled covers (see the figure Disposition of hardware elements in the gateway (page 19)). These covers are assembled by pressure, so you just need to pull to remove them.

7.5. DIP Switches

The gateway has two DIP switches (see the figure Disposition of hardware elements in the gateway (page 19)):

- DIP switch A (SW A)
- DIP switch B (SW B)

Each DIP switch is dedicated to a 485 port, and its function is to activate or deactivate the termination resistor (position 1) and the polarization (positions 2 and 3) of each port.

Position			Description
1	2	3	
OFF	X	X	120 Ω termination inactive
ON	X	X	120 Ω Termination active
X	OFF	OFF	Polarization inactive
X	ON	ON	Polarization active

NOTE
Default positions are:

- DIP switch A (SW A): **OFF, OFF, OFF** (120 Ω termination and polarization inactive)
- DIP switch B (SW B): **OFF, OFF, OFF** (120 Ω termination and polarization inactive)

IMPORTANT
Observe the **ON** indicator on the DIP switch as a reference.

7.6. Push Button

Find the push button at the top side, between the KNX and the Ethernet connectors (see the figure Disposition of hardware elements in the gateway (page 19)).

NOTE
The button is hidden and only accessible using a thin object like a paper clip.

Common functionality:

RESET FACTORY SETTINGS

1. Push the button.
2. Power on the gateway.
3. Wait four seconds.
4. Release the button.

Functionalities depending on the current project:

- **BACnet**: Push the button to send an I-Am message to all BACnet ports.

- **KNX**: Push the button to switch between normal mode and programming mode.

7.7. Technical Specifications

Housing	Plastic, type PC (UL 94 V-0). Color: Light Grey. RAL 7035 Net dimensions (HxWxD): Millimeters: 90 x 106 x 58 mm / Inches: 3.5 x 4.2 x 2.3"	
Mounting	Wall: Use M3 25 mm (1") length screws. Secure mounting: below 2 meters (6 feet) DIN rail (recommended mounting) EN60715 TH35	
Wires (for power supply and low-voltage signals)	Wire cross-section/gauge per terminal: One core: 0.2 .. 2.5 mm^2 (24 .. 14 AWG) Two cores: 0.2 to 1.5 mm^2 (24 .. 16 AWG) Three cores: Not permitted Use solid or stranded wires (twisted or with ferrule). For distances longer than 3.05 meters (10 feet), use class 2 cables	
Power	1 x Green pluggable terminal block (3 poles) 12 to 36 VDC +/-10%, Max.: 250 mA Recommended: 24 VDC, Max.: 127 mA	
Ethernet	1 x Ethernet 10/100 Mbps RJ45	
Port EIA 485	1 x Green pluggable terminal block (3 poles) SGND (Reference ground or shield) 1500 VDC isolation from other ports	
Port KNX	1 x Orange pluggable terminal block (2 poles): A, B	
AC Ports	AC-Port A (serial, 2 poles): Not used AC-Port B (serial, 3 poles): AC bus connection (XY) AC-Port C: (serial, 3 poles): Not used	
LEDs	2 x Run (Power/Error) 2 x Port EIA-485 TX/RX 2 x Port KNX TX/TR 1 x Button indicator	2 x Ethernet Link/Speed 2 x AC-Port A TX/RX 2 x AC-Port B TX/RX 2 x AC-Port C TX/RX
Binary inputs	1 x Green pluggable terminal block (4 poles) I1, I2, I3, and Common 1500 VDC isolation from other ports	
Console port	USB Mini-B type 2.0 compliant 1500 VDC isolation	
DIP switches	**SW A** Position 1: On: 120 Ω termination active Off: 120 Ω termination inactive (default) Position 2 and 3: On: Polarization active Off: Polarization inactive (default)	**SW B** Position 1: On: 120 Ω termination active Off: 120 Ω termination inactive (default) Position 2 and 3: On: Polarization active Off: Polarization inactive (default)
Push button	1 x Push button Factory reset I-Am message (for BACnet only) Normal mode/programming mode switch (for KNX only)	
Operational temperature	Celsius: 0 .. 60°C Fahrenheit: 32 .. 140°F	
Operational humidity	5 to 95%. No condensation	
Protection	IP20 (IEC60529)	

7.8. Dimensions

NET DIMENSIONS (HxWxD)
Inches: 3.5 x 4.2 x 2.3"
Millimeters: 90 x 106 x 58 mm

IMPORTANT
Leave enough clear space to wire the gateway easily and for the subsequent manipulation of elements such as connectors, DIP switches, etc.

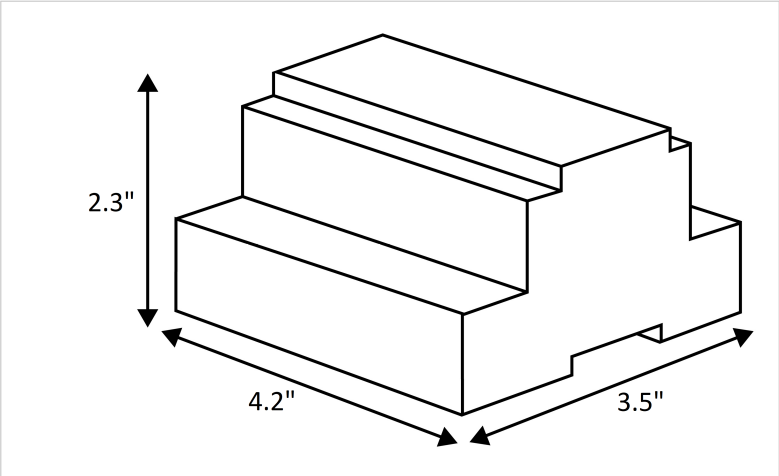

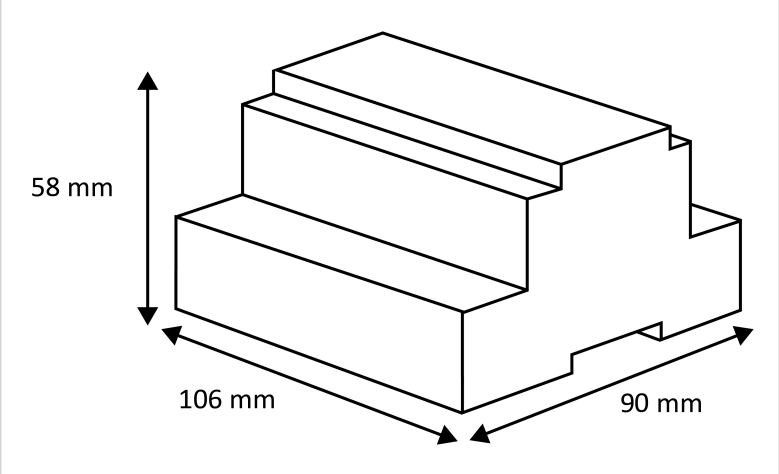

8. Available Protocol Combinations

8.1. Integration into BACnet Systems

NOTICE
You can consult the Protocol Implementation Conformance Statement (PICS) document here.

8.1.1. BACnet Objects

NOTICE
This part is common for BACnet MS/TP and BACnet/IP.

Input object types:

- Binary input

Output object types:

- Binary output
- Multistate output
- Analog output

The following tables list all available BACnet objects for this gateway.

Table 2. Global signals

Object name	Possible values	Object type	Object instance
On/Off (all units)	0: Off 1: On	4-Binary Output	0 + 0
Mode (all units)	1: Heat 2: Cool 3: Fan 4: Dry 5: Auto	14-Multistate Output	0 + 0
FanSpeed (all units)	1: Auto 2: Low 3: Med 4: High	14-Multistate Output	0 + 1
Vane Position Swing (all units)	0: Swing Off 1: Swing On	4-Binary Output	0 + 1
Temperature Setpoint (all units)	Celsius: 17 .. 30°C Fahrenheit: 62 .. 86°F	1-Analog Output	0 + 0
Operating mode force (all Units)	0: No force 1: Force	4-Binary Output	0 + 2
Remote control lock (all units)	0: Unlock 1: Lock	4-Binary Output	0 + 3

Table 3. Individual units signals

Object name	Possible values	Object type	Object instance
UXX_On/Off_S	0: Off 1: On	3-Binary Input	(IU[1..N] × 100) + 0
UXX_On/Off_C	0: Off 1: On	4-Binary Output	(IU[1..N] × 100) + 0
UXX_Mode_S	1: Heat 2: Cool 3: Fan 4: Dry 5: Auto 6: AutoHeat 7: AutoCool 8: AutoDry 9: AutoFan	13-Multistate Input	(IU[1..N] × 100) + 0
UXX_Mode_C	1: Heat 2: Cool 3: Fan 4: Dry 5: Auto	14-Multistate Output	(IU[1..N] × 100) + 0
UXX_Setpoint_S	Celsius: 17 .. 30°C Fahrenheit: 62 .. 86°F	0-Analog Input	(IU[1..N] × 100) + 0
UXX_Setpoint_C	Celsius: 17 .. 30°C Fahrenheit: 62 .. 86°F	1-Analog Output	(IU[1..N] × 100) + 0
UXX_FanSpeed_S	1: Auto 2: Low 3: Med 4: High	13-Multistate Input	(IU[1..N] × 100) + 1
UXX_FanSpeed_C	1: Auto 2: Low 3: Med 4: High	14-Multistate Output	(IU[1..N] × 100) + 1
UXX_Vane position swing_S	0: Swing Off 1: Swing On	3-Binary Input	(IU[1..N] × 100) + 1
UXX_Vane position swing_C	0: Swing Off 1: Swing On	4-Binary Output	(IU[1..N] × 100) + 1
UXX_Room Temperature	Celsius: -20 .. 100°C Fahrenheit: -4 .. 212°F	0-Analog Input	(IU[1..N] × 100) + 1
UXX_Unit Error Code	0: No error 1 .. 255: Error	0-Analog Input	(IU[1..N] × 100) + 2
UXX_Communication Error IU	0: No error 1: Error	3-Binary Input	(IU[1..N] × 100) + 2
UXX_Remote control lock_S	0: Unlock 1: Lock	3-Binary Input	(IU[1..N] × 100) + 3
UXX_Remote control lock_C	0: Unlock 1: Lock	4-Binary Output	(IU[1..N] × 100) + 2

Object name	Possible values	Object type	Object instance
UXX_Control lock_Mode Heat_S	0: Unlock 1: Lock	3-Binary Input	(IU[1..N] × 100) + 7
UXX_Control lock_Mode Heat_C	0: Unlock 1: Lock	4-Binary Output	(IU[1..N] × 100) + 6
UXX_Control lock_Mode Cool_S	0: Unlock 1: Lock	3-Binary Input	(IU[1..N] × 100) + 8
UXX_Control lock_Mode Cool_C	0: Unlock 1: Lock	4-Binary Output	(IU[1..N] × 100) + 7
UXX_Control lock_Mode Fan_S	0: Unlock 1: Lock	3-Binary Input	(IU[1..N] × 100) + 9
UXX_Control lock_Mode Fan_C	0: Unlock 1: Lock	4-Binary Output	(IU[1..N] × 100) + 8
UXX_Operating mode force_S	0: No force 1: Force	3-Binary Input	(IU[1..N] × 100) + 4
UXX_Operating mode force_C	0: No force 1: Force	4-Binary Output	(IU[1..N] × 100) + 3
UXX_Consumption_Yesterday_S	Wh/KWh	0-Analog Input	(IU[1..N] × 100) + 3
UXX_Consumption_Today_S	Wh/KWh	0-Analog Input	(IU[1..N] × 100) + 4
UXX_Consumption_Total_S	Wh/KWh	0-Analog Input	(IU[1..N] × 100) + 5
UXX_Consumption_Yesterday_Heat_S	Wh/KWh	0-Analog Input	(IU[1..N] × 100) + 6
UXX_Consumption_Today_Heat_S	Wh/KWh	0-Analog Input	(IU[1..N] × 100) + 7
UXX_Consumption_Total_Heat_S	Wh/KWh	0-Analog Input	(IU[1..N] × 100) + 8
UXX_Consumption_Yesterday_Cool_S	Wh/KWh	0-Analog Input	(IU[1..N] × 100) + 9
UXX_Consumption_Today_Cool_S	Wh/KWh	0-Analog Input	(IU[1..N] × 100) + 10
UXX_Consumption_Total_Cool_S	Wh/KWh	0-Analog Input	(IU[1..N] × 100) + 11

NOTE
[1..N] refers to the Unit index in Intesis MAPS, as shown in the **Unit** column on the Signals Tab.

8.2. Integration into Modbus Systems

8.2.1. Modbus Registers

NOTICE
This part is common for Modbus RTU and TCP.

Functions to read Modbus registers:

- 03 Read Holding Registers.
- 04 Read Input Registers.

Function to write Modbus registers:

- 06 Single Holding Registers.

Modbus register contents are expressed in most significant bit (MSB) .. less significant bit (LSB).

The following tables list all available Modbus registers for the gateway.

NOTICE
Read/write parameter terminology:

- **R**: Read-only register.
- **W**: Write-only register.
- **RW**: Read and write register.

Table 4. Global signals

Register name	Possible values	Modbus address	R/W
On (all units)	1: Set the units On	0	Trigger
Off (all units)	1: Set the units Off	1	Trigger
Operation Mode Auto (all units)	1: Set Auto Mode	2	Trigger
Operation Mode Heat (all units)	1: Set Heat Mode	3	Trigger
Operation Mode Dry (all units)	1: Set Dry Mode	4	Trigger
Operation Mode Fan (all units)	1: Set Fan Mode	5	Trigger
Operation Mode Cool (all units)	1: Set Cool Mode	6	Trigger
Fan Speed Auto (all units)	1: Set Fan Speed Auto	7	Trigger
Fan Speed Low (all units)	1: Set Fan Speed Low	8	Trigger
Fan Speed Mid (all units)	1: Set Fan Speed Mid	9	Trigger
Fan Speed High (all units)	1: Set Fan Speed High	10	Trigger
Swing On (all units)	1: Set Swing On	11	Trigger
Swing Off (all units)	1: Set Swing Off	12	Trigger
Temperature Setpoint (x10) (all units)	Celsius: 17 .. 30°C Fahrenheit: 62 .. 88°F	13	Trigger
Operating mode force On (all Units)	1: Force Operating mode	14	Trigger
Operating mode force Off (all Units)	1: Unforce Operating mode	15	Trigger
Remote control lock On (all units)	1: Lock remote control	16	Trigger
Remote control lock Off (all units)	1: Unlock remote control	17	Trigger

Table 5. Individual units signals

Register name	Possible values	Modbus address formula	R/W
On/Off	0: Off 1: On	(IU address[1..N] × 100) + 0	R, W
Operation Mode	0: Heat 1: Cool 2: Fan 3: Dry 4: Auto 5: AutoHeat 6: AutoCool 7: AutoDry 8: AutoFan[1]	(IU address[1..N] × 100) + 1	R, W
Temperature Setpoint (x10)	Celsius: 17 .. 30°C Fahrenheit: 62 .. 88°F	(IU address[1..N] × 100) + 2	R, W
Fan Speed	0: Auto 1: Low 2: Med 3: High	(IU address[1..N] × 100) + 3	R, W
Vane Position Swing	0: Swing Off 1: Swing On	(IU address[1..N] × 100) + 4	R, W
Room Temperature (x10)	Celsius: -20 .. 100°C Fahrenheit: -4 .. 212°F	(IU address[1..N] × 100) + 5	R
Unit Error Code	0: No error 1 .. 255: Error	(IU address[1..N] × 100) + 6	R
Communication Error IU	0: No error 1: Error	(IU address[1..N] × 100) + 7	R
Remote Control lock	0: Unlock 1: Lock	(IU address[1..N] × 100) + 8	R, W
Force Operating mode	0: No force 1: Force	(IU address[1..N] × 100) + 9	R, W
Consumption Yesterday	Wh/KWh	(IU address[1..N] × 100) + 10	R
Consumption Today	Wh/KWh	(IU address[1..N] × 100) + 12	R
Consumption Total	Wh/KWh	(IU address[1..N] × 100) + 14	R
Consumption Yesterday Heat	Wh/KWh	(IU address[1..N] × 100) + 16	R
Consumption Today Heat	Wh/KWh	(IU address[1..N] × 100) + 18	R
Consumption Total Heat	Wh/KWh	(IU address[1..N] × 100) + 20	R
Consumption Yesterday Cool	Wh/KWh	(IU address[1..N] × 100) + 22	R
Consumption Today Cool	Wh/KWh	(IU address[1..N] × 100) + 24	R
Consumption Total Cool	Wh/KWh	(IU address[1..N] × 100) + 26	R

[1]Operation Modes 5 to 8 are read-only.

NOTE
[1..N] refers to the Unit index in Intesis MAPS, as shown in the **Unit** column on the Signals Tab.

8.3. Integration into KNX Systems

8.3.1. KNX Signals

The following tables list all available KNX signals for this gateway.

NOTE
Physical Address: The gateway supports (P/S) and (P/I/S) format levels.

NOTICE
Communication object flags:

- **Ri (Read on initialization)**: The gateway requests this signal's updated data after an initialization instead of waiting for a change in the signal.
- **R**: The KNX system can read this signal.
- **W**: The KNX system can write this signal.
- **T**: The KNX system receives a telegram when this signal changes its value.
- **U**: This signal's data is updated after a reboot of either the gateway or the bus.

Table 6. Global signals

Object name	Possible values	DPT	Flags
Control_On/Off (all units)	0: Off, 1: On	1.001-DPT_Switch (1bit)	W
Control_Operating Mode (all units)	0: Auto 1: Heat 3: Cool 9: Fan 14: Dry	20.105-DPT_HVACContrMode (1byte)	W
Control_Operating Mode (all units)	0: Auto 1: Heat 2: Dry 3: Fan 4: Cool	5.x (1byte)	W
Control_Operating Mode (all units)	0: Cool 1: Heat 2: Fan 3: Dry 4: Auto	5.x (1byte)	W
Control_Fan Speed (all units)	0: Low 1: Mid 2: High	5.x (1byte)	W
Control_Fan Speed AUTO (all units)	1: Set auto fan 0: Stop auto fan	1.001-DPT_Switch (1bit)	W
Control_Setpoint (all the units)	Celsius: 17 .. 30°C Fahrenheit: 62 .. 86°F	9.001/9.027-DPT_Value_Temp (2byte)	W
Control_Operating Mode force (all the units)	0: No force 1: Force	1.002 DPT_Bool (1bit)	W
Control_Remote Lock/Unlock (all the units)	0: Unlock 1: Lock	1.002 DPT_Bool (1bit)	W

Table 7. Individual unit signals

Object name	Possible values	DPT	Flags
Status_CommError	0: No error 1: Error	1.005-DPT_Alarm (1bit)	R, T
Control_On/Off	0: Off 1: On	1.001-DPT_Switch (1bit)	W, U
Status_On/Off	0: Off 1: On	1.001-DPT_Switch (1bit)	R, T
Control_Operation mode	0: Auto 1: Heat 3: Cool 9: Fan 14: Dry	20.105-DPT_HVACContrMode (1byte)	W, U
Status_Operation mode	0: Auto 1: Heat 3: Cool 9: Fan 14: Dry	20.105-DPT_HVACContrMode (1byte)	R, T
Control_Operation mode	0: Auto 1: Heat 2: Dry 3: Fan 4: Cool	5.x (1byte)	W, U
Status_Operation mode	0: Auto 1: Heat 2: Dry 3: Fan 4: Cool 5: AutoCool 6: AutoHeat 7: AutoDry 8: AutoFan	5.x (1byte)	R, T
Control_Operation mode	0: Cool 1: Heat 2: Fan 3: Dry 4: Auto	5.x (1byte)	W, U
Status_Operation mode	0: Cool 1: Heat 2: Fan 3: Dry 4: Auto	5.x (1byte)	R, T
Control_Mode Cool/Heat	0: Cool 1: Heat	1.100-DPT_Heat/Cool (1bit)	W, U
Status_Mode Cool/Heat	0: Cool 1: Heat	1.100-DPT_Heat/Cool (1bit)	R, T
Control_Auto mode	1: Set auto mode	1.001-DPT_Switch (1bit)	W, U
Status_Auto mode	1: Auto mode active 0: Auto mode not active	1.001-DPT_Switch (1bit)	R, T
Control_Heat mode	1: Set heat mode	1.001-DPT_Switch (1bit)	W, U

Object name	Possible values	DPT	Flags
Status_Heat mode	1: Heat mode active 0: Heat mode not active	1.001-DPT_Switch (1bit)	R, T
Control_Cool mode	1: Set cool mode	1.001-DPT_Switch (1bit)	W, U
Status_Cool mode	1: Cool mode active 0: Cool mode not active	1.001-DPT_Switch (1bit)	R, T
Control_Fan mode	1: Set fan mode	1.001-DPT_Switch (1bit)	W, U
Status_Fan mode	1: Fan mode active 0: Fan mode not active	1.001-DPT_Switch (1bit)	R, T
Control_Dry mode	1: Set dry mode	1.001-DPT_Switch (1bit)	W, U
Status_Dry mode	1: Dry mode active 0: Dry mode not active	1.001-DPT_Switch (1bit)	R, T
Status_AutoHeat	1: AutoHeat mode active 0: AutoHeat mode not active	1.001-DPT_Switch (1bit)	R, T
Status_AutoCool	1: AutoCool mode active 0: AutoCool mode not active	1.001-DPT_Switch (1bit)	R, T
Status_AutoDry	1: AutoDry mode active 0: AutoDry mode not active	1.001-DPT_Switch (1bit)	R, T
Status_AutoFan	1: AutoFan mode active 0: AutoFan mode not active	1.001-DPT_Switch (1bit)	R, T
Control_Temperature setpoint	Celsius: 17 .. 30°C Fahrenheit: 62 .. 86°F	9.001/9.027-DPT_Value_Temp (2byte)	W, U
Status_Temperature setpoint	Celsius: 17 .. 30°C Fahrenheit: 62 .. 86°F	9.001/9.027-DPT_Value_Temp (2byte)	R, T
Control_Fan speed enumerated	0: Low 1: Medium 2: High	5.x (1byte)	W, U
Status_Fan speed enumerated	0: Low 1: Medium 2: High	5.x (1byte)	R, T
Control_Fan speed scaling	Thresholds: 0 .. 49% 50 .. 82 % 83 .. 100 %	5.001-DPT_Scaling (1byte)	W, U
Control_Fan speed scaling (V8)	Thresholds: 0 .. 15% 16 .. 30% 31 .. 45% 46 .. 60% 61 .. 75% 76 .. 90% 91 .. 100%	5.001-DPT_Scaling (1byte)	W, U
Status_Fan speed scaling	Thresholds: 33% 66% 100%	5.001-DPT_Scaling (1byte)	R, T

Object name	Possible values	DPT	Flags
Status_Fan speed scaling (V8)	Thresholds: 14% 28% 42% 56% 70% 84% 100%	5.001-DPT_Scaling (1byte)	R, T
Control_Fan speed low	1: Set fan speed low	1.001-DPT_Switch (1bit)	W, U
Status_Fan speed low	1: Speed low active 0: Speed low not active	1.001-DPT_Switch (1bit)	R, T
Control_Fan speed medium	1: Set fan speed medium	1.001-DPT_Switch (1bit)	W, U
Status_Fan speed medium	1: Speed medium active 0: Speed medium not active	1.001-DPT_Switch (1bit)	R, T
Control_Fan speed high	1: Set fan speed high	1.001-DPT_Switch (1bit)	W, U
Status_Fan speed high	1: Speed high active 0: Speed high not active	1.001-DPT_Switch (1bit)	R, T
Control_Fan speed Man/Auto	0: Manual 1: Auto	1.001-DPT_Switch (1bit)	W, U
Status_Fan speed Man/Auto	0: Manual 1: Auto	1.001-DPT_Switch (1bit)	R, T
Control_VanesUD position swing	0: Swing off 1: Swing on	1.001-DPT_Switch (1bit)	W, U
Status_VanesUD position swing	0: Swing off 1: Swing on	1.001-DPT_Switch (1bit)	R, T
Status_AC ambient temperature	Celsius: 0 .. 30°C Fahrenheit: 32 .. 86°F	9.001/9.027-DPT_Value_Temp (2byte)	R, T
Control_KNX ambient temperature	°C / °F	9.001/9.027-DPT_Value_Temp (2byte)	W, U
Status_Unit error code	0: No error 1 .. 255: Error	8.x (2 byte)	R, T
Control_Remote control lock	0: Unlock 1: Lock	1.002 DPT_Bool (1bit)	W, U
Status_Remote control lock	0: Unlock 1: Lock	1.002 DPT_Bool (1bit)	R, T
Control_Force operating mode	0: No force 1: Force	1.002 DPT_Bool (1bit)	W, U
Status_Force operating mode	0: No force 1: Force	1.002 DPT_Bool (1bit)	R, T
Status_Consumption Yesterday	Wh/KWh	13.010 active energy (Wh) (4byte)	R, T
Status_Consumption Today	Wh/KWh	13.010 active energy (Wh) (4byte)	R, T
Status_Consumption Total	Wh/KWh	13.010 active energy (Wh) (4byte)	R, T
Status_Consumption Yesterday Heat	Wh/KWh	13.010 active energy (Wh) (4byte)	R, T
Status_Consumption Today Heat	Wh/KWh	13.010 active energy (Wh) (4byte)	R, T
Status_Consumption Total Heat	Wh/KWh	13.010 active energy (Wh) (4byte)	R, T
Status_Consumption Yesterday Cool	Wh/KWh	13.010 active energy (Wh) (4byte)	R, T
Status_Consumption Today Cool	Wh/KWh	13.010 active energy (Wh) (4byte)	R, T

Object name	Possible values	DPT	Flags
Status_Consumption Total Cool	Wh/KWh	13.010 active energy (Wh) (4byte)	R, T

NOTE
The default unit for the consumption signals is Wh, but you can set it in KWh instead. If so, the DPT ID changes from 13.010 to 13.013.

8.4. Integration into Home Automation Systems

8.4.1. Home Automation Signals

The following tables list all available Home Automation signals for this gateway.

NOTE

- **SET**: Command used to control the indoor unit. It is sent by the client.
- **CHN**: Command used to get notifications of changes in the status of a specific function of the gateway. It is sent spontaneously by the gateway itself.
- **GET**: Command used to get the status of a specific function. It is sent by the client.

To know more about the Home Automation protocol, see the WMP protocol specifications manual.

Table 8. Indoor units signals

Name	Possible values	acNum[1]	Commands supported
On/Off	ON OFF	See the note below	SET/CHN/GET
Operation Mode	HEAT COOL FAN DRY AUTO		SET/CHN/GET
Fan Speed	1 2 3 4 5 AUTO		SET/CHN/GET
Vane Position	STOP SWING		SET/CHN/GET
Temperature Setpoint (x10)	°C / °F		SET/CHN/GET
AC Ambient Temperature (x10)	Celsius: -35 .. 92.5°C Fahrenheit: -31 .. 198.5°F		CHN/GET
Unit Error code	0: No Error X: Error		CHN/GET
Error IU	OK ERR		CHN/GET

NOTE

[1] This index must be set according to the Unit ID Index.

For outdoor units, the acNum value must be the same as the minimum indoor unit associated in the CONFIGURATION section.

9. Field Configuration: Change the Gateway's Protocol

Reconfiguring the gateway with a different protocol is very easy:

1. Connect the gateway to the PC and open the configuration tool Intesis MAPS.
2. Select the new template you need.
3. Click **Next** or double-click the template in the list.
4. A message will pop up, asking if you want to save the project currently loaded in the gateway.
5. Click **Yes** or **No**, depending on your needs.
6. Configure the needed parameters and signals for your new project.
7. Send the configuration to the gateway.

NOTE
To know more about the gateway configuration, consult the Intesis MAPS guide for INT-DMS-770-004.

10. Error Codes

NOTE
These error codes are the same for all applications.

Error code	Error in RC	Error description
-200	N/A	Overconsumption error in XYE bus
-100	N/A	License error / Indoor units not supported by current license
-1 (65535)	N/A	Communication error between the gateway and the AC unit
0	N/A	No active error
1	E0	Phase error or error in the phase sequence
2	E1	Communication error
3	E2	T1 sensor error
4	E3	T2A sensor error
5	E4	T2B sensor error
6	E5	T3 temperature and T4 temperature Compressor discharge temperature sensors error
7	E6	Zero cross error detection
8	E7	EEPROM memory error
9	E8	Indoor fan speed out of control
10	E9	Communication error between the main panel and the visualization panel
11	EA	Compressor's current overload error (4 times)
12	EB	Inverter module protection
13	EC	Cooling error
14	ED	Outdoor unit fault protection
15	EE	Water level fault detection
16	EF	Other errors
101	P0	Vaporizer temperature protection
102	P1	Thawing or cold air protection
103	P2	Condenser high temperatures protection
104	P3	Compressor temperature protection
105	P4	Evacuation duct temperature protection
106	P5	Discharge high pressure protection
107	P6	Discharge low pressure protection
108	P7	Current overload or underload protection
109	P8	Compressor's current overload protection
110	P9	Reserved
111	PA	Reserved
112	PB	Reserved
113	PC	Reserved
114	PD	Reserved
115	PE	Reserved
116	PF	Other protection measures

IMPORTANT
These error codes may differ depending on the specific AC unit model.

NOTE
If you detect a non-listed error code, please contact the AC manufacturer's technical support.