619PHB
High Wall Unit Ductless System
Sizes 09 to 18

Product Data

A221351

Fig. 1 —Sizes 09K-12K

A221229

Fig. 1 — 9K-12K Remote Controller

A221352

Fig. 2 —Size 18K

A221230

Fig. 3 — 18K Remote Controller

NOTE: Images are for illustration purposes only. Actual models may differ slightly.

TABLE OF CONTENTS

INDUSTRY LEADING FEATURES / BENEFITS 1
BENEFITS 2
MODEL NUMBER NOMENCLATURE 3
STANDARD FEATURES AND ACCESSORIES 4
DIMENSIONS 5
CLEARANCES 7
SPECIFICATIONS. 8
APPLICATION DATA 9
WIRING 10
CONTROL SYSTEM. 10
REMOTE CONTROLLERS 10
WIRING DIAGRAMS 12
GUIDE SPECIFICATIONS 14

INDUSTRY LEADING FEATURES / BENEFITS

A PERFECT BALANCE BETWEEN BUDGET LIMITS, ENERGY SAVINGS AND COMFORT.

The **619PHB** series ductless systems are a matched combination of an outdoor condensing unit and an indoor fan coil unit connected only by refrigerant tubing and wires.

The fan coil is mounted on the wall, near the ceiling. This selection of fan coils permits creative solutions to design problems such as:

- **Add-ons to current space (an office or family room addition)**
- **Special space requirements**
- **When changes in the load cannot be handled by the existing system**
- **When adding air conditioning to spaces that are heated by hydronic or electric heat and have no ductwork**
- **Historical renovations or any application where preserving the look of the original structure is essential.**

The ideal compliment to your ducted system when it is impractical or prohibitively expensive to use ductwork.

These compact indoor fan coil units take up very little space in the room and do not obstruct windows. The fan coils are attractively styled to blend with most room decors. Advanced system components incorporate innovative technology to provide reliable cooling performance at low sound levels.

BENEFITS

Low Sound Levels

When noise is a concern, the ductless systems are the answer. The indoor units are whisper quiet. There are no compressors indoors, either in the conditioned space or directly over it, and there is none of the noise usually generated by air being forced through ductwork.

Secure Operation

If security is an issue, outdoor and indoor units are connected only by refrigerant piping and wiring to prevent intruders from crawling through ductwork. In addition, since the outdoor units can be installed close to an outside wall, coils are protected from vandals and severe weather.

Fast Installation

This compact ductless system is simple to install. A mounting bracket is standard with the indoor units and only wire and piping need to be run between the indoor and outdoor units. These units are fast and easy to install ensuring minimal disruption to customers in the home or workplace. This makes the **619PHB** ductless systems the equipment of choice, especially in retrofit situations.

Simple Servicing and Maintenance

Removing the top panel on outdoor units provides immediate access to the control compartment, providing a service technician access to check unit operation. In addition, the draw-thru design of the outdoor section means that dirt accumulates on the outside surface of the coil. Coils can be cleaned quickly from the inside using a pressure hose and detergent.

On all indoor units, service and maintenance expense is reduced due to easy-to-use cleanable filters. In addition, these high wall systems have extensive self-diagnostics to assist in troubleshooting.

Built-in Reliability

Ductless system indoor and outdoor units are designed to provide years of trouble-free operation.

The high wall indoor units include protection against freeze-up and high evaporator temperatures on heat pumps.

The condensing units on heat pumps are protected by a three minute time delay before the compressor starts the over-current protection and the high temperature protection.

Individual Room Comfort

Maximum comfort is provided because each space can be controlled individually based on usage pattern. The air sweep feature provided permits optimal room air mixing to eliminate hot and cold spots for occupant comfort. In addition, year-round comfort can be provided with heat pumps.

Economical Operation

The ductless system design allows individual room heating or cooling when required. There is no need to run large supply-air fans or chilled water pumps to handle a few spaces with unique load patterns. In addition, because air is moved only in the space required, no energy is wasted while air moves through the ducts.

Easy-To Use Controls

The high wall units have microprocessor-based controls to provide the ultimate in comfort and efficiency. The user friendly wireless remote control provides the interface between the user and the unit.

Accessories

Customizing these ductless systems to your application is easily accomplished.

Adding a condensate pump accessory to the high wall fan coil provides installation flexibility.

Optional Wired Controller

Agency Listings

All systems are listed with AHRI (Air Conditioning, Heating & Refrigeration Institute), and UL.

Manufacturer reserves the right to change, at any time, specifications and designs without notice and without obligations.

MODEL NUMBER NOMENCLATURE

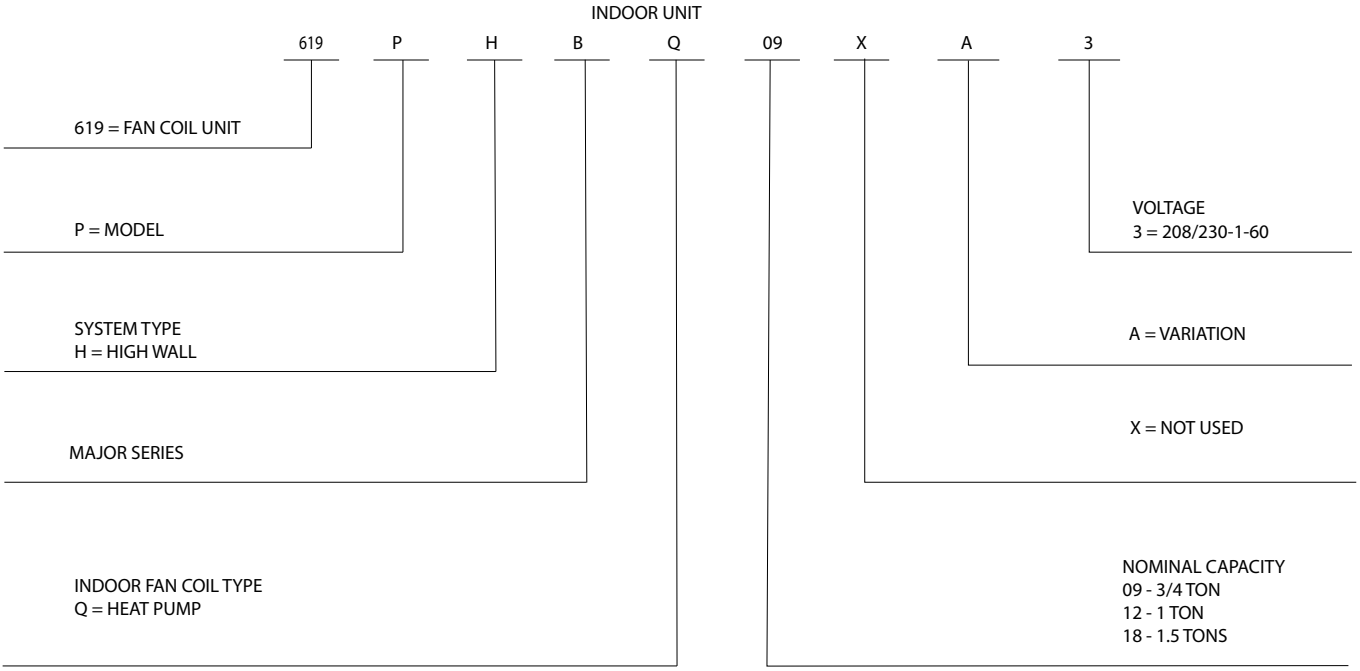

A221353

Use of the AHRI Certified TM Mark indicates a manufacturer's participation in the program For verification of certification for individual products, go to www.ahridirectory.org.

A221232

STANDARD FEATURES AND ACCESSORIES

Ease Of Installation	
Mounting Brackets	S
Stencil Template	S
Low Voltage Controls	S
Comfort Features	
Microprocessor Controls	S
Wired Remote Control	A
Wi-Fi Control	S
Wireless Remote Control	S
Automatic Up-Down Airflow Louver Swing	S
Automatic Right-Left Airflow Louver Swing	S
Air Direction Control	S
Auto Restart Function	S
Cold Blow Protection On Heat Pumps	S
Freeze Protection Mode On Heat Pumps	S
Turbo Mode	S
Silence Mode	S
Auto Changeover On Heat Pumps	S
Follow Me	S
Relative Humidity Sensor	S
Occupancy Sensor (only sizes 09-12)	S
ECO Mode	S
Energy Saving Features	
Sleep Mode	S
Stop/Start Timer	S
46° F Heating Mode (Heating Setback)	S
Safety And Reliability	
Indoor Coil Freeze Protection	S
Indoor Coil High Temp Protection in Heating Mode	S
Aluminum Golden Hydrophilic pre-coated fins	S
Ease Of Service And Maintenance	
Diagnostics	S
Cleanable Filters	S
Application Flexibility	
Condensate Pumps	A

Legend

S - Standard
A - Accessory

Accessories

ACCESSORY NO.	DESCRIPTION	FOR MODELS
53DS-900---118	CONDENSATE PUMP (208-230V)	208/230V MODELS
KSACN0601AAA	WIRED REMOTE CONTROL 7 DAY PROGRAMMABLE	ALL SIZES
KSAIC0301230	24V INTERFACE KIT 230V	208/230V MODELS
53DS-900---089	INSULATED 25’ LINE SET - 1/4” X 3/8”	SIZE 09
53DS-900---008	INSULATED 25’ LINE SET - 1/4“X 1/2”	SIZE 12

Indoor Units

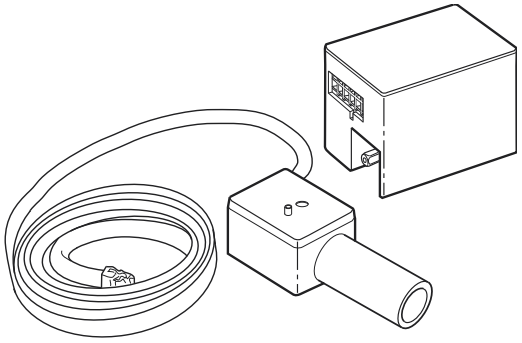

Fig. 4 —Condensate Pump Accessory

On high wall fan coils, the condensate pump has a lift capability of 12 ft. (3.6 m) on the discharge side with the pump mounted in the fan coil or 6 ft. (1.8 m) on the suction side if the pump is remote mounted. The pump is recommended when an adequate drain line pitch cannot be provided, or when the condensate must move up to exit.

NOTE: An external 115v power source is required to run the pump.

DIMENSIONS

Sizes 9K and 12K

HIGH WALL UNIT SIZE		9K	12K
Voltage		(208/230V)	(208/230V)
Height	In. (mm)	11.7 (298)	11.7 (298)
Width	In. (mm)	35.2 (895)	35.2 (895)
Depth	In. (mm)	9.8 (248)	9.8 (248)
Weight-Net	Lbs (kg)	37.48 (17)	37.48 (17)

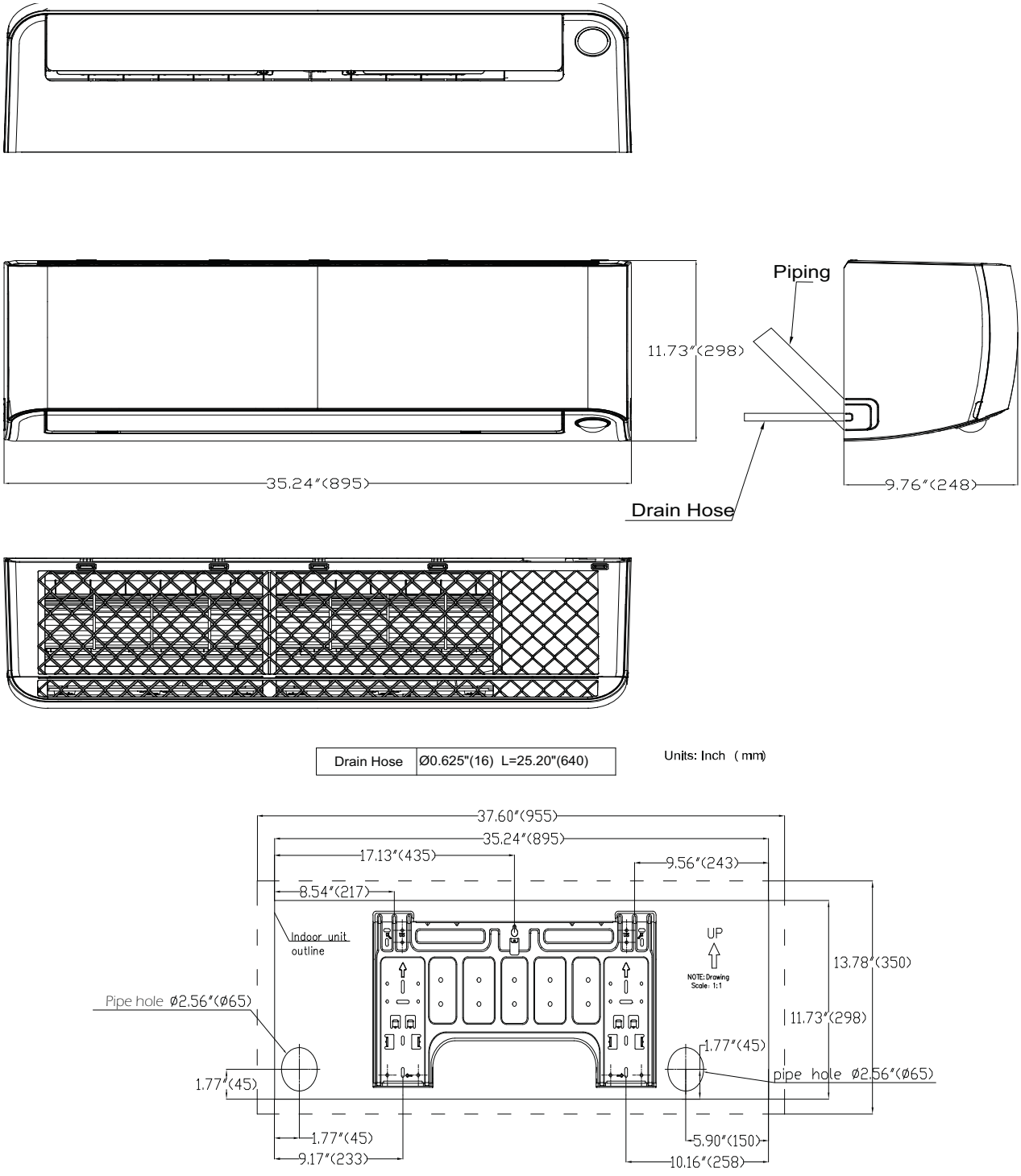

A221234

Fig. 5 —Sizes 9K and 12K

DIMENSIONS (CONT)

Size 18K

HIGH WALL UNIT SIZE		18K
Voltage		(208/230V)
Height	In. (mm)	14.57 (370)
Width	In. (mm)	44.88 (1140)
Depth	In. (mm)	10.83 (275)
Weight-Net	Lbs (kg)	43.65(19.8)

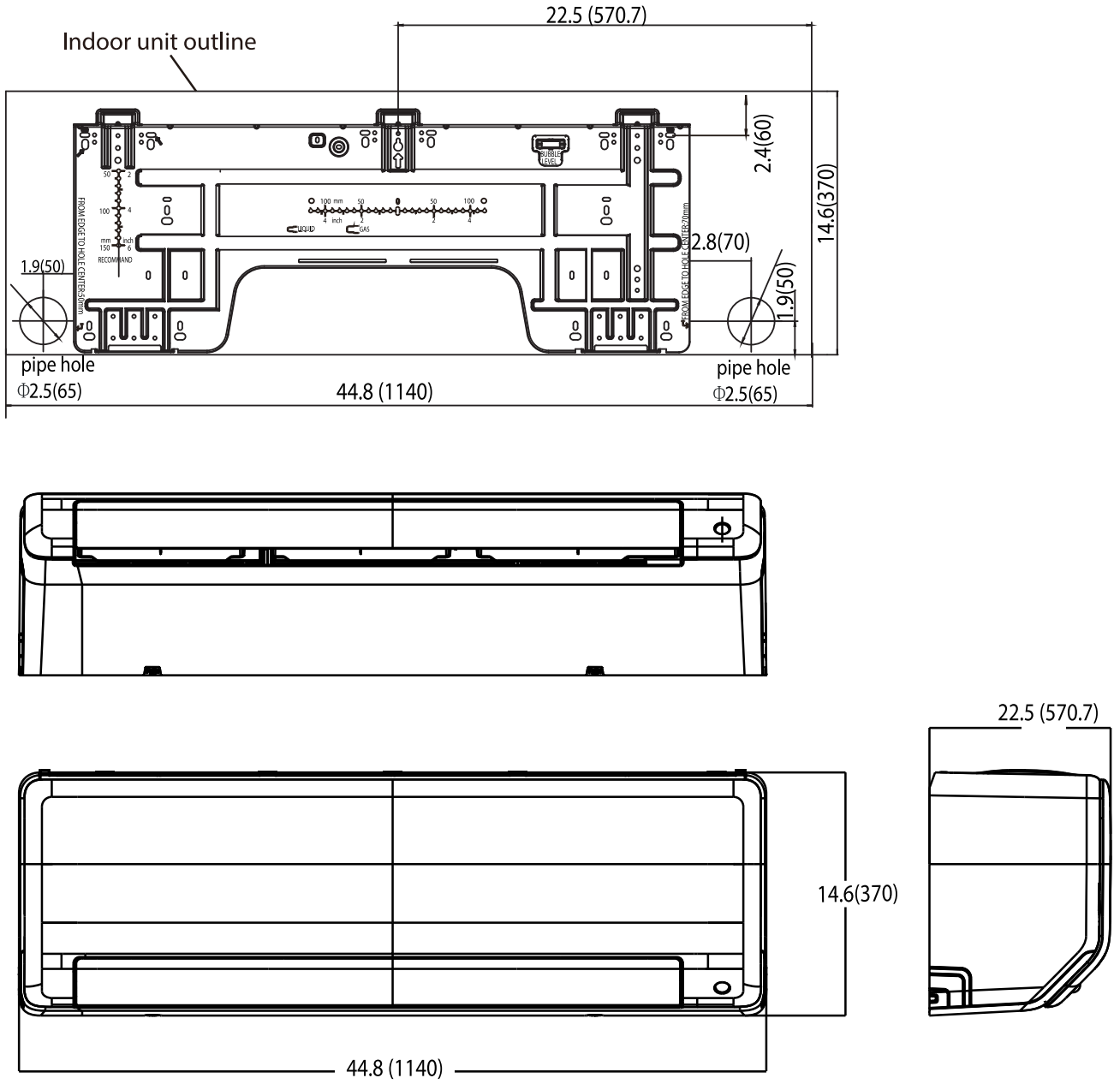

A221235

Fig. 6 — Size 18K

CLEARANCES

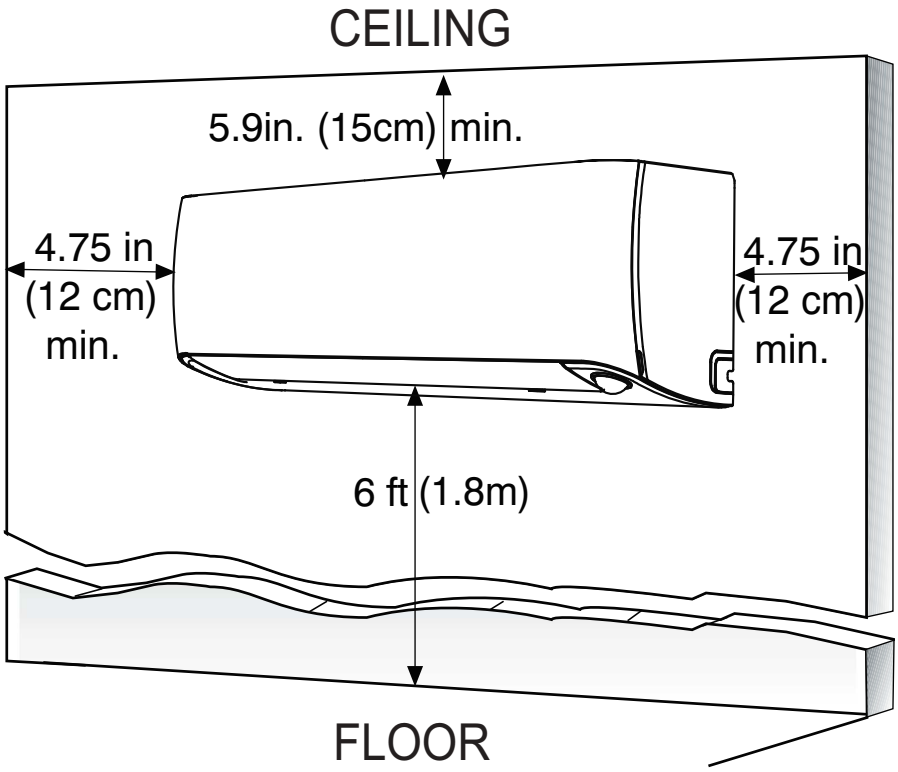

A221236

Fig. 7 — Indoor Unit Clearances

NOTE: The top clearance recommended for proper return airflow is 5.9in (15cm). Reduction of this clearance may decrease the performance of these units. This may be reduced to 3.2in (80mm) as long as the right and left clearances are achieved.

SPECIFICATIONS

SYSTEM	SIZE		9	12	18
	Indoor Model		**619PHBQ09XA3**	**619PHBQ12XA3**	**619PHBQ18XA3**
Electrical	Voltage, Phase, Cycle	V/Ph/Hz	208/230-1-60	208/230-1-60	208/230-1-60
	Power Supply		Indoor unit powered from outdoor unit		
	MCA	A.	0.3	0.3	0.625
Controls	Wireless Remote Controller (°F/°C Convertible)		Standard	Standard	Standard
	Wired Remote Controller (°F/°C Convertible)		Optional	Optional	Optional
Operating Range	Cooling Indoor DB Min - Max	°F (°C)	62~90 (17~32)	62~90 (17~32)	63~90 (17~32)
	Heating Indoor DB Min - Max	°F (°C)	32~86 (0~30)	32~86 (0~30)	32~86 (0~30)
Piping	Pipe Connection Size - Liquid	in (mm)	1/4” (6.35)	1/4” (6.35)	3/8” (9.52)
	Pipe Connection Size - Suction	in (mm)	1/2” (12.7)	1/2” (12.7)	5/8” (15.9)
Indoor Coil	Face Area (sq. ft.)	Sq. Ft.	2.18	2.18	3.6
	No. Rows		4	4	3
	Fins per inch		21	21	20
	Circuits		5	5	7
Indoor	Unit Width	in (mm)	35.2 (895)	35.2(895)	44.88 (1140)
	Unit Height	in (mm)	11.7 (298)	11.7 (298)	14.57 (370)
	Unit Depth	in (mm)	9.8(248)	9.8 (248)	10.83 (275)
	Net Weight	lbs (kg)	37.48 (17)	37.48 (17)	43.65(19.8)
	Number of Fan Speeds		4	4	4
	Airflow (lowest to highest)	CFM	144/245/295/345	168/252/306/357	319/414/611/719
	Sound Pressure (lowest to highest)	dB(A)	29/35.5/41.5/45.6	29/35.5/41.5/46.8	36.7/39.2/43.5/52.1
	Air throw Data	ft (m)	21.98 (6.7)	22.97 (7)	31.5 (9.6)
	Moisture removal	Pint/h (L/h)	2.11 (1.0)	2.53 (1.2)	5.5 (2.6)
	Field Drain Pipe Size O.D.	in (mm)	0.625 (16)	0.625 (16)	0.625 (16)

Performance may vary based on the compatible outdoor units. See respective pages for performance data.

NOTE: See the current compatibility charts for a list of the indoor unit and outdoor unit match ups.

APPLICATION DATA

Unit Selection

Select equipment that either matches or is supports slightly more than the anticipated peak load. This provides better humidity control, fewer unit cycles, and less part-load operation.

For units used in spaces with high sensible loads, base equipment selection on unit sensible load, not on total anticipated load. Adjust for anticipated room wet bulb temperature to avoid undersizing the equipment.

Unit Mounting (Indoor)

Refer to the unit's installation instructions for further details.

Unit leveling - For reliable operation, units should be level in all planes.

Clearance - Provide adequate clearance for airflow (See Fig. 7 — on page 7).

Unit location - Select a location which provides the best air circulation for the room. These units should be positioned as high as possible on the wall for the best air circulation. The unit return and discharge should not be obstructed by furniture, curtains, or anything which may cause unit short cycling or air recirculation.

Place the unit in the middle of the selected wall (if possible). Use an outside wall, if available, to make piping easier, and place the unit so it faces the normal location of room occupants.

Unit Mounting (Outdoor)

Refer to the unit's installation instructions for further details. Do not install the indoor or outdoor units in a location with special environmental conditions. For those applications, contact your Carrier representative.

Mounting Template

Refer to the unit's installation instructions for further details. The fan coil units are furnished with mounting to mark the location of the wiring, and the refrigeration line hole locations.

Support

Adequate support must be provided to support the weight of all the fan coils.

System Operating Conditions

OPERATING RANGE MIN / MAX °F (°C)		
	COOLING	HEATING
Indoor DB	62 / 90 (17 / 32)	32 / 86 (0 / 30)

NOTE: Reference the product installation instructions for more information.

Drain Connections

Install drains that meet the local sanitation codes. If adequate gravity drainage cannot be provided, the unit should be equipped with an accessory condensate pump. The high wall fan coil unit condensate pumps have a maximum lift of 10' (3.05 m) for 9k and 12k units. See the physical dimension tables for the drain sizes.

NOTE: High wall fan coil units have internal condensate traps. A trap is not required.

Drain connections may be routed through alternate locations on most fan coils (see Fig.).

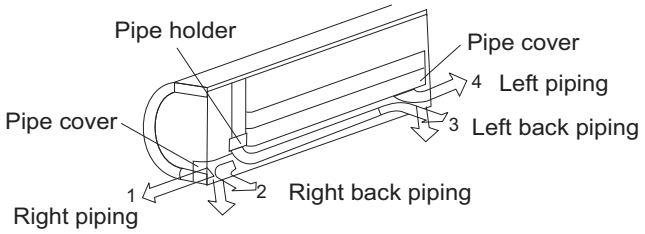

Fig. 8 —Piping Locations

WIRING

All wires must be sized per NEC (National Electrical Code) or CEC (Canadian Electrical Code) and local codes. Use Electrical Data table MCA (minimum circuit amps) and MOCP (maximum over current protection) to correctly size the wires and the disconnect fuse or breakers respectively.

Recommended Connection Method for Power and Communication Wiring:

The main power is supplied to the outdoor unit. The field supplied 14/3 stranded wire with ground with a 600 volt insulation rating, power/communication wiring from the outdoor unit to indoor unit consists of four (4) wires and provides the power for the indoor unit. Two wires are line voltage AC power, one is communication wiring (S) and the other is a ground wire. Wiring between indoor and outdoor unit is polarity sensitive. The use of BX wire is NOT recommended.

If installed in a high Electromagnetic field (EMF) area and communication issues exists, a 14/2 stranded shielded wire can be used to replace L2 and (S) between outdoor unit and indoor unit landing the shield onto ground in the outdoor unit **only**.

⚠ CAUTION

ELECTRICAL SHOCK HAZARD
Failure to follow this caution may result in equipment damage or improper operation.
Wires should be sized based on NEC and local codes.

⚠ CAUTION

EQUIPMENT DAMAGE HAZARD
Failure to follow this caution may result in equipment damage or improper operation.
Be sure to comply with local codes while running wire from the indoor unit to the outdoor unit.
Every wire must be connected firmly. Loose wiring may cause the terminal to overheat or result in unit malfunction. A fire hazard may also exist. Ensure all wiring is tightly connected.
No wire should touch the refrigerant tubing, compressor or any moving parts.
Disconnecting means must be provided and shall be located within sight and readily accessible from the air conditioner.
Connecting cable with conduit shall be routed through the hole in the conduit panel.

CONTROL SYSTEM

The indoor unit is equipped with a microprocessor control to perform two functions:

1. Provide safety for the system
2. Control the system and provide optimum levels of comfort and efficiency.

The main microprocessor is located on the control board of the fan coil unit (outdoor units also have a microprocessor) with thermistors located in the fan coil air inlet and on the indoor coil.

Heat pump units have a thermistor on the outdoor coil. These thermistors monitor the system operation to maintain the unit within acceptable parameters and controls the operating mode.

REMOTE CONTROLLERS

A221229

Fig. 9 — Wireless Remote Controller 9K-12K

A221230

Fig. 10 — Wireless Remote Controller 18K

1. A wireless remote control is supplied for system operation for system operation of all high wall units.
2. Each battery operated wireless (infrared) remote control may be used to control more than one unit.

WIRED REMOTE CONTROL (OPTIONAL)

P/N KSACN0601AAA (7 day programmable) - 9K-12K
P/N KSACN0801AAA (7 day programmable) - 18K

1. Optional wired remote controller used for system operation of all high wall units.
2. Kit includes a wired remote controller and a 19 ft (6m) connecting cable.

NOTE: Extension wire available through RCD (Part Number: 17401204000769).

3. Connect with wire terminal between remote controller and indoor unit.
4. Display in °F or °C and temperature increments every 1°F or every 1°C.

A220667

Fig. 11 —Wired Remote Control

24 Interface

P/N KSAIC0301230 for 208-230V models

Allows the Ductless System to be controlled using a third party thermostat.

Air Flow Data

System Size		9K	12K	18K
Indoor (CFM)	Turbo	357	357	718
	HIGH	306	306	611
	MEDIUM	252	252	414
	LOW	168	168	318

Air Throw Data

High Wall Unit Capacity	Max. Approximate Air Throw ft. (m)	Approximate Air Throw range ft.(m)
9K (208/230V)	22.97(7)	4.6~23.95 (1.4~7.3)
12K (208/230V)	22.97(7)	4.6~23.95 (1.4~7.3)
18K (208/230V)	31.5(9.6)	4.6~31.5 (1.4~9.6)

Moisture Removal

Size		9K	12K	18K
Voltage, Phase, Cycle	V/Ph/Hz	208/230/1/60	208/230/1/60	208/230/1/60
Dehumidifying Volume	L/h	1.2	1.2	2.6
	PINT/D	2.4	2.4	5.5

Sound Pressure

High Walls Indoor		9K	12K	18K
Cooling Operation Indoor	dBA at (Low/ Med/High/Turbo CFM)	29/35.5/41.5/45.6	29/35.5/41.5/46.8	52.1/43.5/39.2/36.7
Heating Operation Indoor	dBA at (Low/ Med/High/Turbo CFM)	30.5/36/40.5/44.5	30.5/36/40.5/46.1	52/44.1/38.2/36.5

Fan and Motor Specifications

High Wall Unit Size			9K	12K	18K
			(208/230V)	(208/230V)	(208/230V)
High Wall Fan	Material		glass fiber+AS	glass fiber+AS	glass fiber+AS
	Type		GL-108*670-IN	GL-108*670-IN	GL-121*883-IN
	Diameter	In (mm)	4.25(108)	4.25(108)	4.76(121)
	Height	In (mm)	26.38(670)	26.38(670)	34.76(883)
High Wall Fan Motor	Model		ZKFP-20-8-6-7	ZKFP-20-8-6-7	ZKFP-58-8-1-6
	Volts	V	208/230	208/230	208/230
	Phase		1	1	1
	Hertz		60	60	60
	FLA		0.034	0.034	0.5
	Type		DC	DC	DC
	Insulation class		E	E	E
	Safe class		IPX0	IPX0	IP20(Welling)/IP40(Dayang)
	Input	W	50	50	113.5(Welling)/125(Dayang)
	Output	W	20	20	58
	Range of current	Amps	0.023	0.023	0.364±10%(Welling)/ 0.4±10%(Dayang)
	Rated current	Amps	0.023±10%	0.023±10%	0.4+- 10%
	Capacitor	μF	No Capacitor		
	Rated HP	HP	0.027	0.027	0.077
	Speed	rev/min	1000/850/650	1050/900/650	1050/880/630
	Rated RPM	rev/min	1050	1050	1050
	Max. input	W	70	70	113.5

Manufacturer reserves the right to change, at any time, specifications and designs without notice and without obligations.

WIRING DIAGRAMS

Sizes 09K to 12K

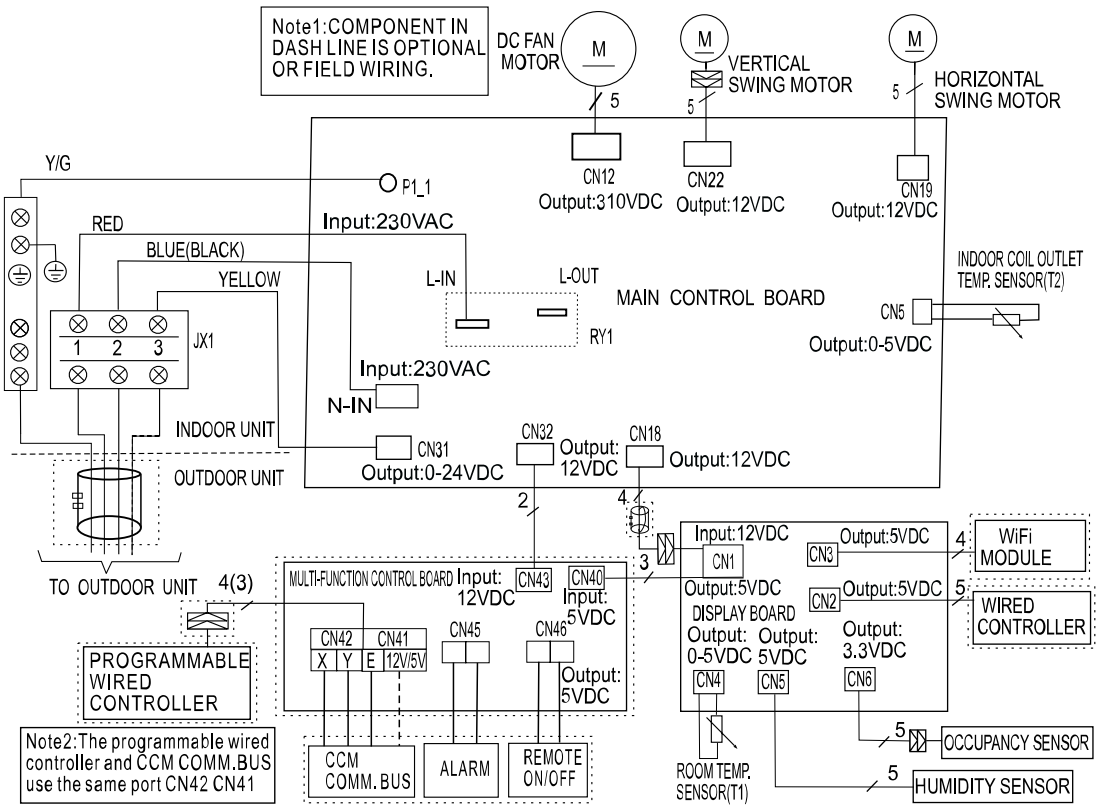

Fig. 12 —Wiring Diagram - Sizes 09K and 12K

WIRING DIAGRAMS (CONT)

Size 18K

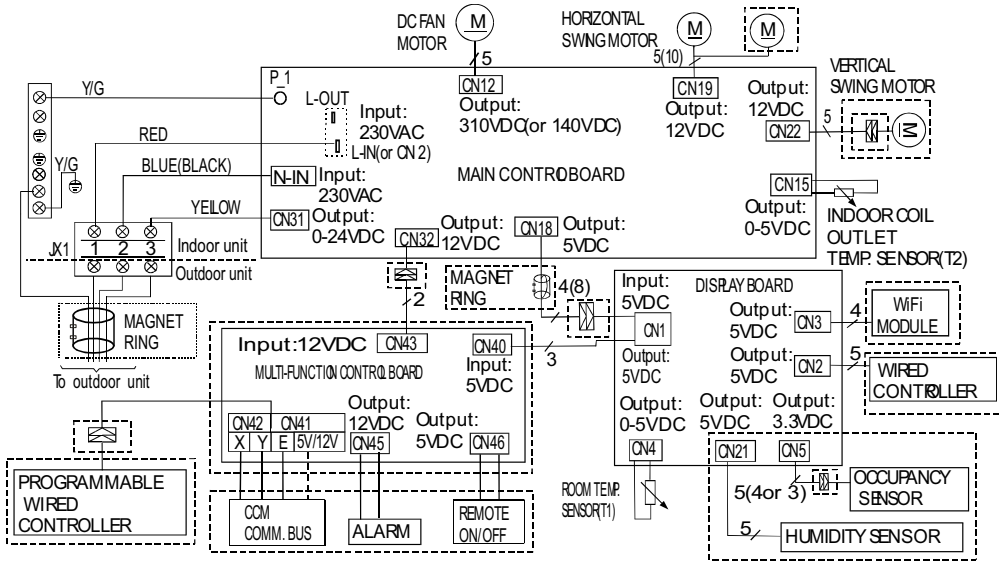

Note1: COMPONENT IN DASH LINE IS OPTIONAL OR FIELD WIRING.

Note2: The programmable wired controller and CCM COMM.BUS use the same port CN42 CN41

FOR SETTING NETADDRESS (CCM Comm.Bus)

ENC3+F1 (MULTI-FUNCTION CONTROL BOARD)				
CODE	0~F	0~F	0~F	0~F
NETADDRESS	0~15	16~31	32~47	48~63
FACTORY SETTING	✓			

A221254

Fig. 13 —Wiring Diagram - Size 18K

GUIDE SPECIFICATIONS

INDOOR WALL-MOUNTED DUCTLESS UNITS

Size Range: 3/4 to 1.5 Ton Nominal Cooling and Heating Capacity

Model Number: **619PHB**

Part 1 - GENERAL

1.01 System Description

Indoor, wall-mounted, direct-expansion fan coils are matched with the heat pump outdoor unit.

1.02 Agency Listings

Unit is rated per AHRI Standards 210/240 and listed in the AHRI directory as a matched system.

1.03 Delivery, Storage, And Handling

Units is stored and handled per the unit manufacturer's recommendations.

1.04 Warranty (For Inclusion By Specifying Engineer)

Part 2 - PRODUCTS

2.01 Equipment

A. **General: Indoor, direct-expansion, wall-mounted fan coil**
Unit is complete with a cooling/heating coil, fan, fan motor, piping connectors, electrical controls, microprocessor control system, and integral temperature sensing. Unit is furnished with an integral wall mounting bracket and mounting hardware.

B. **Unit Cabinet:**
Cabinet discharge and inlet grilles are attractively styled, high-impact polystyrene. Cabinet is fully insulated for improved thermal and acoustic performance.

C. **Fans:**

1. Fan is the tangential direct-drive blower type with air intake at the top of the unit and discharge at the bottom front. An automatic, motor-driven vertical air sweep is provided as standard equipment.
2. The air sweep operation is user selectable. The Up-Down and Right-Left sweep may be adjusted (using the remote control).

D. Coil:
The coil is a copper tube with aluminum fins and galvanized steel tube sheets. The fins are bonded to the tubes by mechanical expansion and golden hydrophilic pre-coated. A drip pan under the coil has a drain connection for the hose attachment to remove condensate. The condensate pan has an internal trap.

E. Motors:
Motors are open drip-proof, with a permanently lubricated ball bearing. The fan motors are 4-speed.

F. Controls:
Controls consist of a microprocessor-based control system which shall control space temperature, determine optimum fan speed, and run self diagnostics. The temperature control range is from 62°F to 86°F (17°C to 30°C) in increments of 1°F or 1°C, and have 46°F Heating Mode (Heating Setback).
The wireless remote controller has the ability to act as the temperature sensing location for room comfort.

The unit shall have the following functions as a minimum:

1. An automatic restart after a power failure at the same operating conditions as at the failure
2. A timer function to provide a minimum 24-hour timer cycle for system Auto Start/Stop.
3. Temperature-sensing controls shall sense return air temperature.
4. Indoor coil freeze protection.
5. Wireless infrared remote control to enter set points and operating conditions.
6. Automatic air sweep control to provide on or off activation of air sweep louvers.
7. Dehumidification mode shall provide increased latent removal capability by modulating the system operation and the set point temperature.
8. Fan-only operation to provide room air circulation when no cooling is required.
9. Diagnostics shall provide continuous checks of unit operation and warn of possible malfunctions. Error messages appear on the unit.
10. Fan speed control is user-selectable: turbo, high, medium, low, or microprocessor controlled automatic operation during all operating modes.
11. Automatic heating-to-cooling changeover in the heat pump mode. Control shall include deadband to prevent rapid mode cycling between heating and cooling.
12. Indoor coil high temperature protection shall be provided to detect excessive indoor discharge temperature when the unit is in the heat pump mode.

G. Filters:
Unit shall have filter track with factory-supplied cleanable filters.

H. Electrical Requirements:
Indoor fan motor to operate on 208-230V, as specified. Power is supplied by the outdoor unit.

I. Operating Characteristics:
The system shall have a minimum SEER (Seasonal Energy Efficiency Ratio) and HSPF at AHRI conditions, as listed on the specifications table.

J. Refrigerant Lines:
All units should have refrigerant lines that can be oriented to connect from the left, right or back of unit. Both refrigerant lines need to be insulated.

K. Special Features (Field Installed): Condensate Pump
The condensate pump shall remove condensate from the drain pan when gravity drainage cannot be used. The pump shall be designed for quiet operation. The pump shall consist of two parts: an internal reservoir/sensor assembly, and a remote sound-shielded pump assembly. A liquid level sensor in the reservoir shall stop the cooling operation if the liquid level in the reservoir is unacceptable.

© 2022 Carrier. All rights reserved.

Manufacturer reserves the right to change, at any time, specifications and designs without notice and without obligations.