**619PHA**
**High Wall Ductless System**
**Sizes 09 to 12**

bryant®

# Service Manual

**TABLE OF CONTENTS**


PAGE

SAFETY CONSIDERATIONS . . . . . 1
INTRODUCTION . . . . . 1
MODEL/SERIAL NUMBER NOMENCLATURES . . . . . 2
SPECIFICATIONS . . . . . 3
COMPATIBILITY . . . . . 3
DIMENSIONS . . . . . 4
CLEARANCES . . . . . 5
ELECTRICAL DATA . . . . . 6
WIRING . . . . . 6
CONNECTION DIAGRAM . . . . . 6
WIRING DIAGRAM . . . . . 7
FAN AND MOTOR SPECIFICATIONS . . . . . 7
REFRIGERATION CYCLE DIAGRAM . . . . . 8
REFRIGERANT LINES . . . . . 9
SYSTEM EVACUATION AND CHARGING . . . . . 9
OPERATION MODES AND FUNCTIONS . . . . . 10
TROUBLESHOOTING . . . . . 15
ERROR DIAGNOSIS AND TROUBLESHOOTING . . . . . 17
QUICK MAINTENANCE BY ERROR CODE . . . . . 21
TROUBLESHOOTING BY ERROR CODE . . . . . 22
DIAGNOSIS AND SOLUTION . . . . . 23
DISASSEMBLY INSTRUCTIONS . . . . . 36
APPENDICES . . . . . 46


## SAFETY CONSIDERATIONS

Installing, starting up, and servicing air−conditioning equipment can be hazardous due to system pressures, electrical components, and equipment location (roofs, elevated structures, etc.).

Only trained, qualified installers and service mechanics should install, start−up, and service this equipment.

Untrained personnel can perform basic maintenance functions such as cleaning coils. All other operations should be performed by trained service personnel.

When working on the equipment, observe precautions in the literature and on tags, stickers, and labels attached to the equipment.

Follow all safety codes. Wear safety glasses and work gloves. Keep quenching cloth and fire extinguisher nearby when brazing. Use care in handling, rigging, and setting bulky equipment.

Read this manual thoroughly and follow all warnings or cautions included in literature and attached to the unit. Consult local building codes and National Electrical Code (NEC) for special requirements.

Recognize safety information. This is the safety−alert symbol ⚠. When you see this symbol on the unit and in instructions or manuals, be alert to the potential for personal injury. Understand these signal words: **DANGER**, **WARNING**, and **CAUTION**.

These words are used with the safety−alert symbol. **DANGER** identifies the most serious hazards which **will** result in severe personal injury or death. **WARNING** signifies hazards which **could** result in personal injury or death. **CAUTION** is used to identify unsafe practices which **may** result in minor personal injury or product and property damage. **NOTE** is used to highlight suggestions which **will** result in enhanced installation, reliability, or operation.

**⚠ WARNING**

**ELECTRICAL SHOCK HAZARD**

Failure to follow this warning could result in personal injury or death.

Before installing, modifying, or servicing system, main electrical disconnect switch must be in the OFF position. There may be more than 1 disconnect switch. Lock out and tag switch with a suitable warning label.

**⚠ WARNING**

**EXPLOSION HAZARD**

Failure to follow this warning could result in death, serious personal injury, and/or property damage.

Never use air or gases containing oxygen for leak testing or operating refrigerant compressors. Pressurized mixtures of air or gases containing oxygen can lead to an explosion.

**⚠ CAUTION**

**EQUIPMENT DAMAGE HAZARD**

Failure to follow this caution may result in equipment damage or improper operation.

Do not bury more than 36 in. (914 mm) of refrigerant pipe in the ground. If any section of pipe is buried, there must be a 6 in. (152 mm) vertical rise to the valve connections on the outdoor units. If more than the recommended length is buried, refrigerant may migrate to the cooler buried section during extended periods of system shutdown. This causes refrigerant slugging and could possibly damage the compressor at start−up.

## INTRODUCTION

This service manual provides the necessary information to service, repair, and maintain the indoor units. Section 2 of this manual has an appendix with data required to perform troubleshooting. Use the Table of Contents to locate a desired topic.

# MODEL/SERIAL NUMBER NOMENCLATURES

**Table 1—Unit Sizes**

| SYSTEM TONS | VOLTAGE/PH/HZ | INDOOR MODEL |
|---|---|---|
| 9 | 208−230/1/60 | 619PHAQ09XA3 |
| 12 | | 619PHAQ12XA3 |

## INDOOR UNIT

**619 P H A Q 09 X A 3**

**619** = FAN COIL UNIT

**P** = MODEL

**VOLTAGE**
**3** = 208/230−1−60

**SYSTEM TYPE**
**H** = HIGH WALL

**INDOOR FAN COIL TYPE**
**Q** = HEAT PUMP

**MAJOR SERIES**

**A = VARIATION**

**X = NOT USED**

**NOMINAL CAPACITY**
**09** – 3/4 TON
**12** – 1 TON

**01 17 V 10001**

**Week of Manufacture**

**Year of Manufacture**

**V = ALL MODELS**

**Sequential Serial Number**

Use of the AHRI Certified TM Mark indicates a manufacturer's participation in the program For verification of certification for individual products, go to www.ahridirectory.org.

# SPECIFICATIONS

**Table 2—Specifications**

| HEAT PUMP | | | | |
|---|---|---|---|---|
| **System** | **SIZE** | | **9** | **12** |
| | Indoor Model | | 619PHAQ09XA3 | 619PHAQ12XA3 |
| **Electrical** | Voltage, Phase, Cycle | V/Ph/Hz | 208/230–1–60 | 208/230–1–60 |
| | Power Supply | | Indoor unit powered from outdoor unit | |
| | MCA | A. | 0.2 | 0.2 |
| **Controls** | Wireless Remote Controller (°F/°C Convertible) | | Standard | Standard |
| | Wired Remote Controller (°F/°C Convertible) | | Optional | Optional |
| **Operating Range** | Cooling Indoor DB Min – Max | °F(°C) | 63~86 (17~30) | 63~86 (17~30) |
| | Heating Indoor DB Min – Max | °F(°C) | 32~86 (0~30) | 32~86 (0~30) |
| **Piping** | Pipe Connection Size – Liquid | in (mm) | 1/4 (6.35) | 1/4 (6.35) |
| | Pipe Connection Size – Suction | in (mm) | 3/8 (9.52) | 1/2 (12.7) |
| **Indoor Coil** | Face Area (sq. ft.) | Sq. Ft. | 2.2 | 2.2 |
| | No. Rows | | 4 | 4 |
| | Fins per inch | | 21 | 21 |
| | Circuits | | 5 | 5 |
| **Indoor** | Unit Width | in (mm) | 35.2 (895) | 35.2 (895) |
| | Unit Height | in (mm) | 11.7 (298) | 11.7 (298) |
| | Unit Depth | in (mm) | 9.8 (248) | 9.8 (248) |
| | Net Weight | lbs (kg) | 29 (13) | 29 (13) |
| | Fan Speeds | | 4 | 4 |
| | Airflow (lowest to highest) | CFM | 144/245/295/345 | 168/252/306/357 |
| | Sound Pressure (lowest to highest) | dB(A) | 29/46 | 31/47 |
| | Air Throw Data | ft (m) | 22 (6.7) | 23 (7) |

Performance may vary based on the outdoor unit matched to. See Table 3 for compatible outdoor units.

# COMPATIBILITY

**Table 3—Compatibility**

| **Indoor Unit** | **619PHAQ09XA3** | **619PHAQ12XA3** |
|---|---|---|
| **Outdoor Unit Single Zone** | 38MPRAQ09AA3 | 38MPRAQ12AA3 |
| **Outdoor Unit Multi–zone** | 38MGRQ18B––3 | |
| | 38MGRQ24C––3 | |
| | 38MGRQ30D––3 | |
| | 38MGRQ36D––3 | |
| | 38MGRQ48E––3 | |

# DIMENSIONS

**Table 4—Indoor Unit Dimensions**

| HIGH WALL UNIT SIZE | | 9K | 12K |
|---|---|---|---|
| Voltage | | (208/230V) | (208/230V) |
| Height | In. (mm) | 11.7 (298) | 11.7 (298) |
| Width | In. (mm) | 35.2 (895) | 35.2 (895) |
| Depth | In. (mm) | 9.8 (248) | 9.8 (248) |
| Weight−Net | Lbs (kg) | 37.48 (17) | 37.48 (17) |

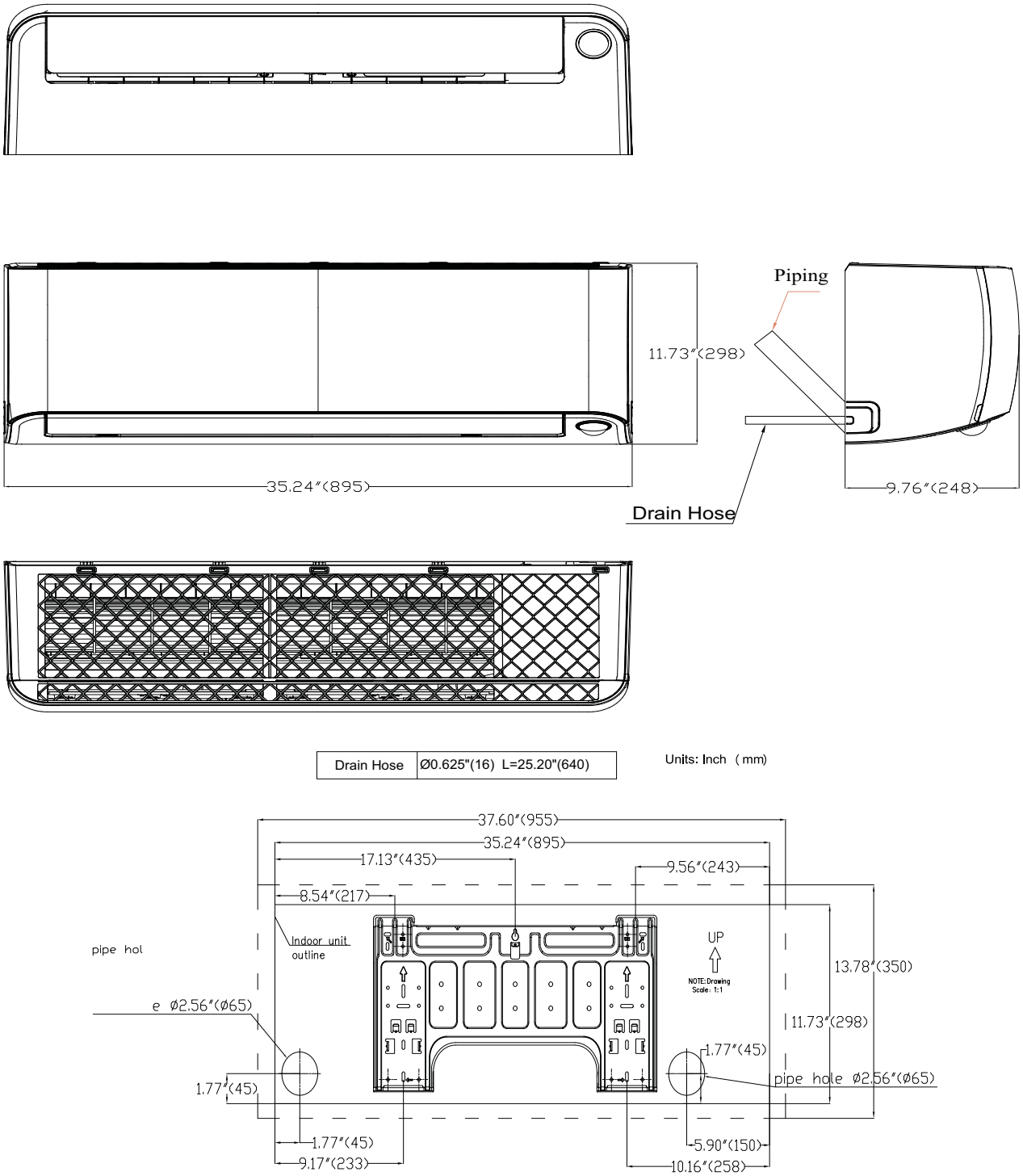


**Fig. 1 – Sizes 9K and 12K**

**NOTE**: Drain adaptor included with the indoor unit to allow the use of a 3/4 in. PVC Schedule 40 where the actual outside diameter is 1.05 in.

## CLEARANCES

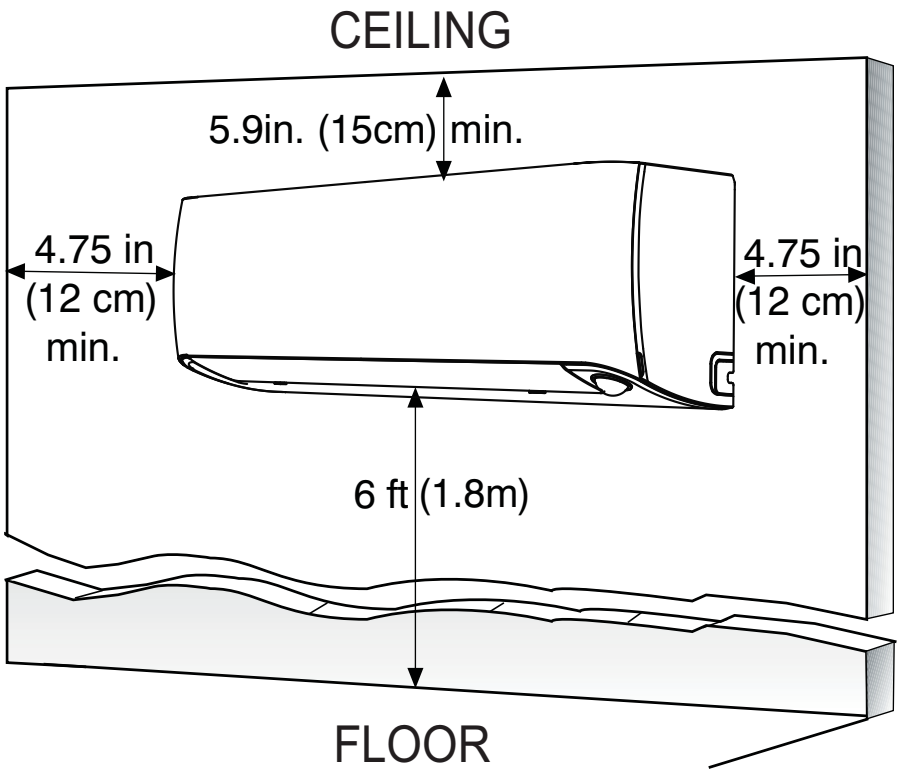


**Fig. 2 – Indoor Unit Clearance**

**NOTE**: The top clearance recommended for proper return airflow is 5.9in (15cm). Reduction of this clearance may decrease the performance of these units. This may be reduced to 3.2in (80mm) as long as the right and left clearances are achieved.

# ELECTRICAL DATA

**Table 5—Electrical Data Indoor High Wall**

| HIGH WALL UNIT SIZE | INDOOR FAN | | | MAX FUSE CB AMP |
|---|---|---|---|---|
| | V−Ph−Hz | FLA | HP | |
| 9K | 208/230−1−60 | 0.23 | 0.027 | Refer to outdoor unit installation instructions – Indoor unit powered by the outdoor unit |
| 12K | | 0.23 | 0.027 | |

*Permissible limits of the voltage range at which the unit will operate satisfactorily.

**LEGEND**

FLA - Full Load Amps

# WIRING

All wires must be sized per NEC (National Electrical Code) or CEC (Canadian Electrical Code) and local codes. Use Electrical Data table MCA (minimum circuit amps) and MOCP (maximum over current protection) to correctly size the wires and the disconnect fuse or breakers respectively.

Per the caution note, only stranded copper conductors with a 600 volt insulation rating wire must be used.

**Recommended Connection Method for Power and Communication Wiring:**

The main power is supplied to the outdoor unit. The field supplied 14/3 stranded wire with ground with a 600 volt insulation rating, power/communication wiring from the outdoor unit to indoor unit consists of four (4) wires and provides the power for the indoor unit. Two wires are line voltage AC power, one is communication wiring (S) and the other is a ground wire. Wiring between indoor and outdoor unit is polarity sensitive. The use of BX wire is NOT recommended.

If installed in a high Electromagnetic field (EMF) area and communication issues exists, a 14/2 stranded shielded wire can be used to replace L2 and (S) between outdoor unit and indoor unit landing the shield onto ground in the outdoor unit only.

**⚠ CAUTION**

**EQUIPMENT DAMAGE HAZARD**

Failure to follow this caution may result in equipment damage or improper operation.

Wires should be sized based on NEC and local codes.

Use copper conductors only with a 600 volt insulation rating wire.

**⚠ CAUTION**

**EQUIPMENT DAMAGE HAZARD**

Failure to follow this caution may result in equipment damage or improper operation.

Be sure to comply with local codes while running wire from the indoor unit to the outdoor unit.

Every wire must be connected firmly. Loose wiring may cause the terminal to overheat or result in unit malfunction. A fire hazard may also exist. Ensure all wiring is tightly connected.

No wire should touch the refrigerant tubing, compressor or any moving parts.

Disconnecting means must be provided and shall be located within sight and readily accessible from the air conditioner.

Connecting cable with conduit shall be routed through the hole in the conduit panel.

# CONNECTION DIAGRAM

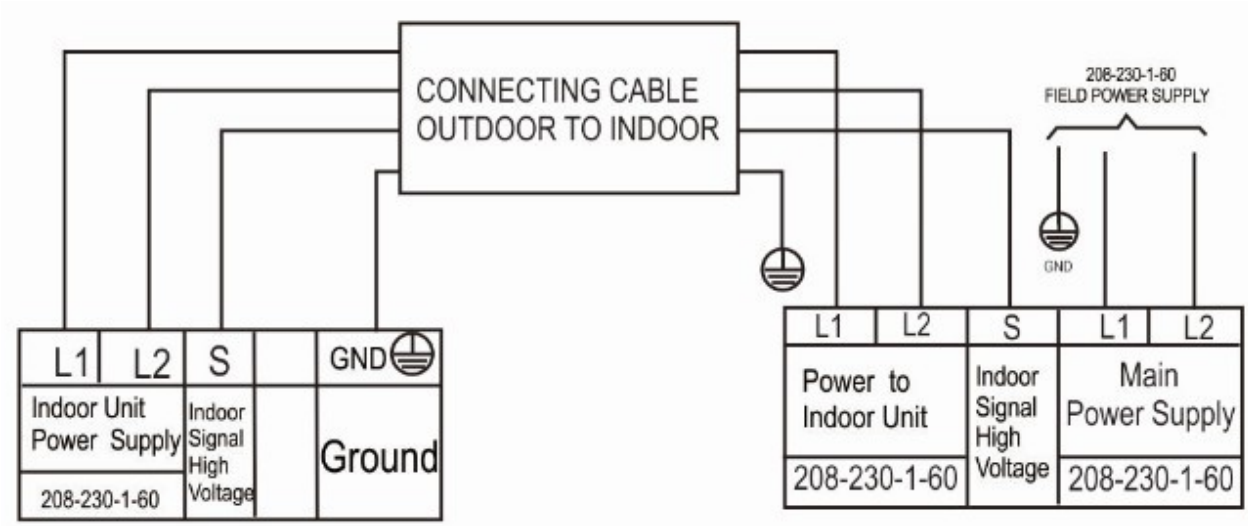


**Fig. 3 – 208−230V**

**Notes**:

1. Do not use thermostat wire for any connection between indoor and outdoor units.
2. All connections between indoor and outdoor units must be as shown. **The connections are polarity sensitive and improper wiring will result in a fault code.**

# WIRING DIAGRAM

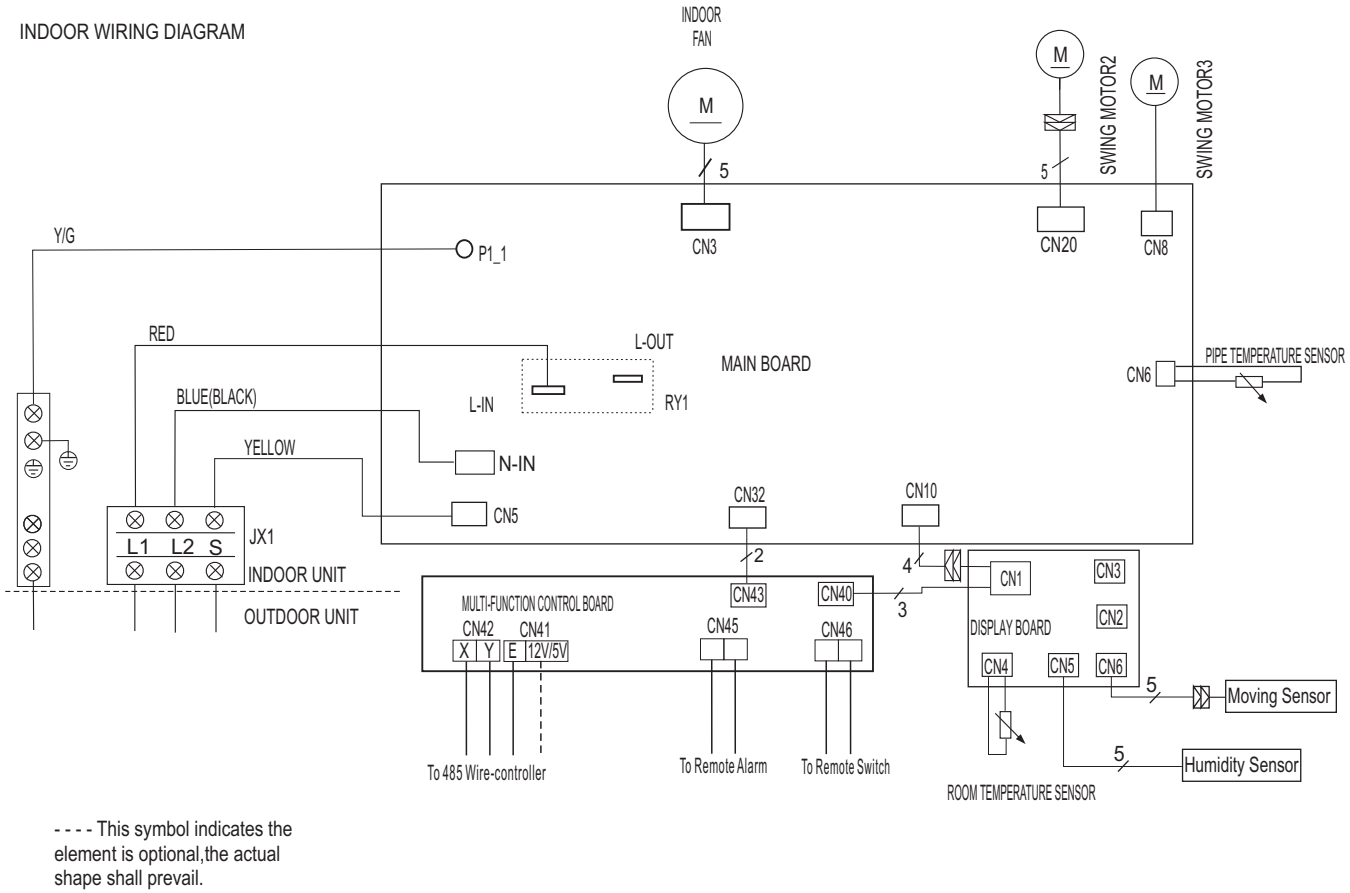


- - - - This symbol indicates the element is optional,the actual shape shall prevail.

**Fig. 4 – Wiring Diagram Sizes 09−12 (208−230V)**

# FAN AND MOTOR SPECIFICATIONS

**Table 6—Fan and Motor Specifications**

| High Wall Unit Size | | | 9K (208/230V) | 12K (208/230V) |
|---|---|---|---|---|
| High Wall Fan | Material | | glass fiber+AS | glass fiber+AS |
| | Type | | GL−108*670−IN | GL−108*670−IN |
| | Diameter | In (mm) | 4.25(108) | 4.25(108) |
| | Height | In (mm) | 26.38(670) | 26.38(670) |
| High Wall Fan Motor | Model | | ZKFP−20−8−6−7 | ZKFP−20−8−6−7 |
| | Volts | V | 208/230 | 208/230 |
| | Phase | | 1 | 1 |
| | Hertz | | 60 | 60 |
| | FLA | | 0.034 | 0.034 |
| | Type | | DC | DC |
| | Insulation class | | E | E |
| | Safe class | | IPX0 | IPX0 |
| | Input | W | 50 | 50 |
| | Output | W | 20 | 20 |
| | Range of current | Amps | 0.023 | 0.023 |
| | Rated current | Amps | 0.023±10% | 0.023±10% |
| | Capacitor | μF | No Capacitor | |
| | Rated HP | HP | 0.027 | 0.027 |
| | Speed | rev/min | 1000/850/650 | 1050/900/650 |
| | Rated RPM | rev/min | 1000 | 1050 |
| | Max. input | W | 70 | 70 |

# REFRIGERATION CYCLE DIAGRAM

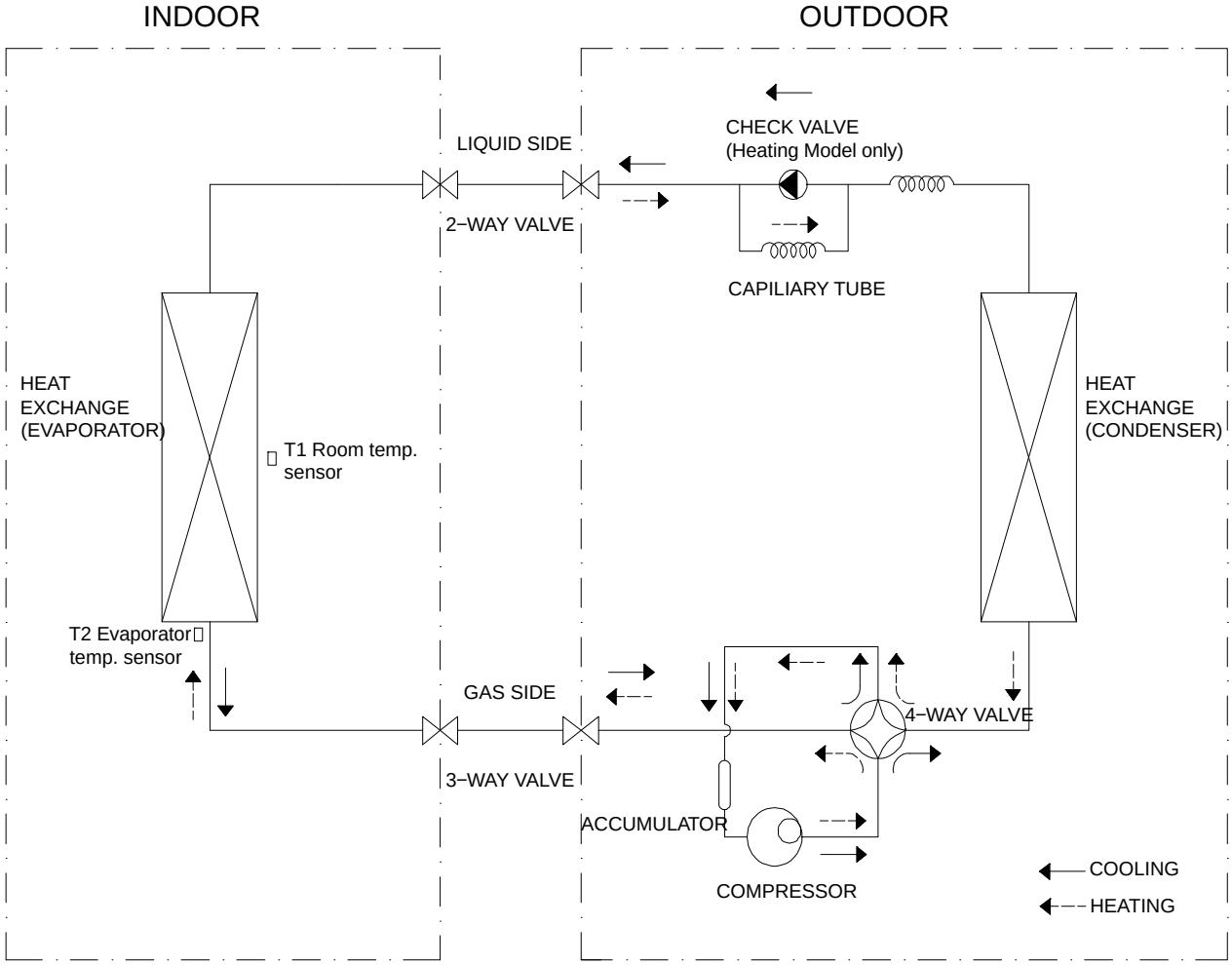


**Fig. 5 – Heat Pumps**

# REFRIGERANT LINES

**IMPORTANT: Both refrigerant lines must be insulated separately.**

Table 2 lists the pipe sizes for the indoor unit. Refer to the outdoor unit installation instructions for other allowed piping lengths and refrigerant information.

# SYSTEM EVACUATION AND CHARGING

**⚠ CAUTION**

**UNIT DAMAGE HAZARD**

Failure to follow this caution may result in equipment damage or improper operation.

Never use the system compressor as a vacuum pump.

Refrigerant tubes and indoor coil should be evacuated using the recommended deep vacuum method of 500 microns. The alternate triple evacuation method may be used if the following procedure is followed. Always break a vacuum with dry nitrogen.

## System Vacuum and Charge

**Using Vacuum Pump**

1 Completely tighten flare nuts on the line set at both the indoor and outdoor units. **DO NOT** open the service valves on the outdoor unit for the new installation or the replacement unit. Open the service valves on the outdoor unit if repairs have been made to the refrigerant sealed system. Connect the manifold gauge low pressure hose to the charge port of the gas side service valve (see Fig. 6).

2 Connect the charge hose to the vacuum pump.

3 Fully open the low pressure valve of manifold gage (see Fig. 7).

4 Start the vacuum pump.

5 Evacuate using deep vacuum or triple evacuation method.

6 After evacuation is complete, fully close the pressure valve side of manifold gage and stop the vacuum pump operation.

7 The factory charge contained in the outdoor unit is good for up to 25ft. (8 m) of line length. If vacuum is complete per Fig. 10 or 11, open service valves to release factory charge into the system.

8 Disconnect the charge hose from the charge connection of the gas side service valve.

9 Securely tighten the service valve caps.

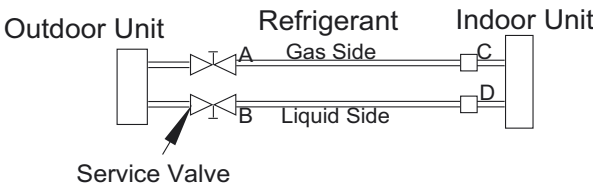


**Fig. 6 – Service Valve**

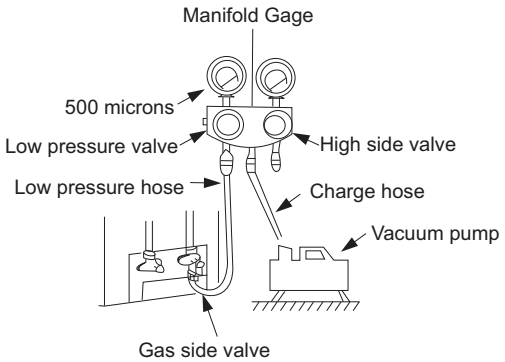


**Fig. 7 – Manifold**

**Deep Vacuum Method**

The deep vacuum method requires a vacuum pump capable of pulling a vacuum of 500 microns and a vacuum gage capable of accurately measuring this vacuum depth. The deep vacuum method is the most positive way of assuring a system is free of air and liquid water (see Fig. 8).

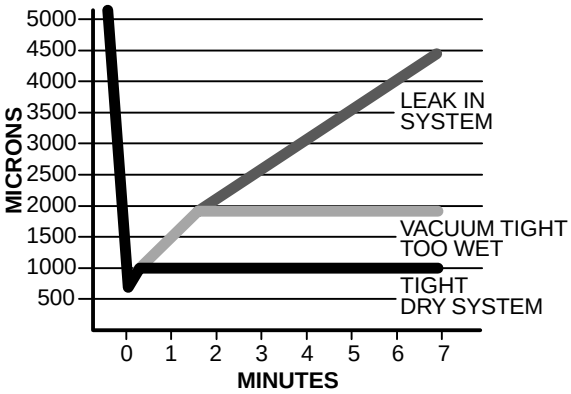


**Fig. 8 – Deep Vacuum Graph**

**Triple Evacuation Method**

The triple evacuation method should be used. Refer to Fig. 9 and proceed as follows:

1 Pump the system down to 1500 microns and allow the pump to continue operating for an additional 15 minutes.

2 Close the service valves and shut off the vacuum pump.

3 Connect a dry nitrogen cylinder and regulator to the system and break vacuum until the system reaches 2 psig.

4 Close the service valve and allow the system to stand for 1hr. During this time, the dry nitrogen can diffuse throughout the system absorbing moisture.

5 Pump the system down to 1000 microns.

6 Break the vacuum with dry nitrogen (2 psig).

7 Pump the system down to 500 microns.

8 Perform the hold test for 30 minutes.

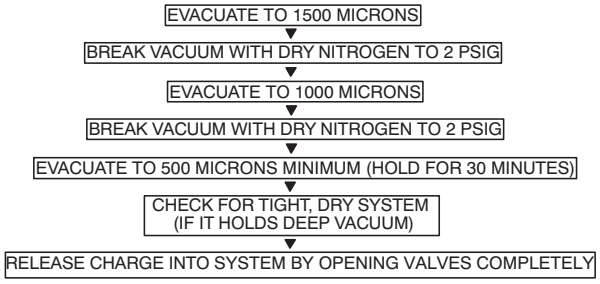


**Fig. 9 – Triple Evacuation Method**

**Final Tubing Check**

**IMPORTANT: Check to be certain factory tubing on both indoor and outdoor unit has not shifted during shipment. Ensure tubes are not rubbing against each other or any sheet metal. Pay close attention to feeder tubes, making sure wire ties on feeder tubes are secure and tight.**

# OPERATION MODES AND FUNCTIONS

## Abbreviation

**Table 7—Unit Element Abbreviations**

| Abbreviation | Element |
|---|---|
| T1 | Indoor room temperature |
| T2 | Evaporator Coil temperature |
| T3 | Condenser Coil temperature |
| T4 | Outdoor ambient temperature |
| Tsc | Adjusted setting temperature |
| TP | Compressor discharge temperature |

## Safety Features

**Compressor Three−Minute Delay at Restart**

Compressor functions are delayed for up to ten seconds upon the first start−up of the unit, and are delayed for up to three minutes upon subsequent unit restarts.

**Automatic shutoff based on discharge temperature**

If the compressor discharge temperature exceeds 226°F (108°C) for nine seconds, the compressor ceases operation.

**Automatic shutoff based on fan speed**

If the indoor fan speed registers below 300RPM or over 1500RPM for an extended period of time, the unit ceases operation and the corresponding error code is displayed on the indoor unit.

**Inverter module protection**

The inverter module has an automatic shutoff mechanism based on the unit's current, voltage, and temperature. If automatic shutoff is initiated, the corresponding error code is displayed on the indoor unit and the unit ceases operation.

**Indoor fan delayed operation**

- When the unit starts, the louver is automaticallyactivated and the indoor fan will operate after a period of setting time or when the louver is in place.
- If the unit is in **HEATING** mode, the indoor fan is regulated by the anti−cold wind function.

**Compressor Preheating**

Preheating is automatically activated when the T4 sensor is lower than setting temperature.

**Sensor redundancy and automatic shutoff**

- If one temperature sensor malfunctions, the air conditioner continues operation and displays the corresponding error code, allowing for emergency use.
- When more than one temperature sensor malfunctions, the air conditioner ceases operation.

## Display Function

**Unit Display Functions**

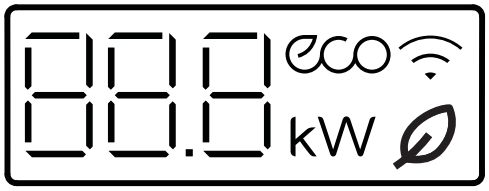


**Fig. 10 – Unit Display Functions**

**Table 8—Unit Function Displays**

| Function | Display |
|---|---|
| Temperature | Set temperature value |
| Temperature (FAN and DRYING mode) | Room temperature |
| Activation of Timer ON, Fresh, Swing, Turbo, or Silent | ON (3s) |
| Cancellation of Timer OFF, Fresh, Swing, Turbo, or Silent | OF (3s) |
| Defrost | dF |
| Warming in heating mode | cF |
| Self-clean | SC |
| Heating in room temp under 46°F (8°C) or 54°F (12°C) | FP |
| Fresh (Not available on these systems) | |
| ECO function | eco |
| WiFi control (Not available on these systems) | |
| The current operation power (Not available on these systems) | kW |

## FAN Mode

When the **FAN** mode is activated:

- The outdoor fan and compressor stop.
- Temperature control is disabled and the indoor room temperature is displayed.
- The indoor fan speed can be set to 1%~100%, or **AUTO**.
- The louver operations are identical to those in **COOLING** mode.
- Auto fan: In **FAN−ONLY** mode, the AC operates the same as auto fan in the **COOLING** mode with the temperature set at 75°F 24°C (Tsc =75°F (24°C).

## COOLING Mode

**Compressor Control**

Reach the configured temperature:

1 When the compressor runs continuously for less than 120 minutes.

- If the following conditions are satisfied, the compressor ceases operation.
  - While the calculated frequency(fb) is less than the minimum limit frequency(FminC).
  - While protective time is more than or equal to ten minutes.
  - While T1 is lower than or equal to (Tsc−CDIFTEMP 31°F (−0.5°C)

**NOTE**: CDIFTEMP is the EEPROM setting parameter. It is 35.6°F (2°C) usually.

2 When the compressor runs continuously for more than 120 minutes.

- If the following conditions are satisfied, the compressor ceases operation.
  - When calculated frequency(fb) is less than minimum limit frequency(FminC).
  - When protective time is more than or equal to ten minutes.
  - When T1 is lower than or equal to (Tsc−CDIFTEMP).

**NOTE**: CDIFTEMP is the EEPROM setting parameter. It is 35.6°F (2°C) usually.

3 If one of the following conditions is satisfied, regardless of time.

- Compressor running frequency is more than the test frequency.
- When the compressor running frequency is equal to the test frequency, T4 is more than 59°F (15°C) or no T4 or T4 fault.
- Change setting temperature
- Turbo or sleep function on/off
- Various frequency limit shutdown occurs

**NOTE**: CDIFTEMP is EEPROM setting parameter. It is 35.6°F (2°C) usually.

**Indoor Fan Control**

1 In the **COOLING** mode, the indoor fan operates continuously. The fan speed can be set to 1%−100%, or **AUTO**.

2 **AUTO** fan

- Descent Curve
  - When T1−Tsc is lower than or equal to 38°F (3.5°C), fan speed reduces to 80%;
  - When T1−Tsc is lower than or equal to 34°F (1°C), fan speed reduces to 60%;
  - When T1−Tsc is lower than or equal to 33°F (0.5°C), fan speed reduces to 40%;
  - When T1−Tsc is lower than or equal to 32°F (0°C), fan speed reduces to 20%;
  - When T1−Tsc is lower than or equal to 31°F (−0.5°C), fan speed reduces to 1%.
- Rise Curve
  - When T1−Tsc is higher than 32°F (0°C), fan speed increases to 20%;
  - When T1−Tsc is higher than 33°F (0.5°C), fan speed increases to 40%;
  - When T1−Tsc is higher than 34°F (1°C), fan speed increases to 60%;
  - When T1−Tsc is higher than 35°F (1.5°C), fan speed increases to 80%;
  - When T1−Tsc is higher than 39°F (4°C), fan speed increases to 100%.

**Outdoor Fan Control**

- The outdoor unit runs at a different fan speed according to T4 and the compressor running frequency.
- For different outdoor units, the fan speeds are different.

**Condenser Temperature Protection**

When the condenser temperature exceeds a configured value, the compressor ceases operations.

**Evaporator Temperature Protection**

When the evaporator temperature drops below a configured value, the compressor and outdoor fan ceases operations.

## HEATING Mode

**Compressor Control**

1 Reach the configured temperature:

- If the following conditions are satisfied, the compressor ceases operation.
  - While the calculated frequency(fb) is less than the minimum limit frequency(FminC).
  - When the protective time is more than or equal to ten minutes.
  - When T1 is higher than or equal to Tsc+HDIFTEMP2.

**NOTE**: HDIFTEMP2 is the EEPROM setting parameter. It is 35.6°F (2°C) usually.

- If one of the following conditions is satisfied, regardless of time.
  - Compressor running frequency is more than test frequency.
  - When the compressor running frequency is equal to the test frequency, T4 is more than 59°F (15°C) or no T4 or T4 fault.
  - Change the setting temperature.
  - Turbo or sleep function on or off.

2 When the current is higher than the predefined safe value, the surge protection is activated, causing the compressor to cease operations.

**Indoor Fan Control**

1 In the **HEATING** mode, the indoor fan operates continuously. The fan speed can be set to 1%−100%, or muted.

2 **AUTO** fan

- Rise curve
  - When T1−Tsc is higher than 29°F (−1.5°C), fan speed reduces to 80%;
  - When T1−Tsc is higher than 32°F (0°C), fan speed reduces to 60%;
  - When T1−Tsc is higher than 33°F (0.5°C), fan speed reduces to 40%;
  - When T1−Tsc is higher than 34°F (1°C), fan speed reduces to 20%.
- Descent curve
  - When T1−Tsc is lower than or equal to 33°F (0.5°C), fan speed increases to 20%;
  - When T1−Tsc is lower than or equal to 32°F (0°C), fan speed increases to 60%;
  - When T1−Tsc is lower than or equal to 29°F (−1.5°C), fan speed increases to 80%;
  - When T1−Tsc is lower than or equal to 27°F (−3°C), fan speed increases to 100%.

**Outdoor Fan Control**

- The outdoor unit runs at a different fan speed according to T4 and compressor running frequency.
- For different outdoor units, the fan speeds differ.

**DEFROSTING Mode**

- The unit enters defrosting mode according to changes in the temperature value of T3, T4 as well as the compressor running time.
- In defrosting mode, the compressor continues to run, the indoor and outdoor motor will cease operation, the defrost light of the indoor unit will turn on, and the "dF" symbol appears.
- If any one of the following conditions is satisfied, defrosting ends and the machine switches to the normal **HEATING** mode:
  - T3 rises above TCDE1°C.
  - T3 maintained above TCDE2°C for 80 seconds.
  - Unit runs for 15 minutes consecutively in the **DEFROSTING** mode.

**Evaporator Temperature Protection**

- **Off:** Compressor stops.
- **Decrease:** Decrease the running frequency to the lower level per 20 seconds.
- **Hold:** Keep the current frequency.
- **Resume:** No limitation for frequency.

## AUTO Mode

- This mode can be selected with the remote controller and the setting temperature can be changed between 61°F~86°F (16°C~30°C).
- In the **AUTO** mode, the machine selects the **COOLING**, **HEATING**, **AUTO−DRYING** or **FAN−ONY** mode on the basis of T1,Ts, T4 and relative humidity.
- If the setting temperature is modified, the machine selects a new running function.

## DRY Mode

In the **DRY** mode, the air conditioner operates the same as auto fan in the **COOLING** mode.

1 Mute function is active.

- All protections are activated and operate the same as they do that in **COOLING** mode.

2 Low Room Temperature Protection

- If the room temperature is lower than 10°C, the compressor ceases operations and does not resume until the room temperature exceeds 12°C.

## Forced Operation Function

- Forced **COOLING** Mode:

The compressor and outdoor fan continue to run and the indoor fan runs at rated speed. After running for 30 minutes, the air conditioner switches to **AUTO** mode with a preset temperature of 24°C.

- Forced **AUTO** Mode:

Forced auto mode operates the same as normal **AUTO** mode with a preset temperature of 24°C.

- The unit exits the forced operation when it receives the following signals:
  - Switch on
  - Switch off
  - Timer on
  - Timer off
  - Changes in:
    - Mode
    - Fan Speed
    - Setting Temperature

## Timer Function

- The Timing range is 24 hours.
- Timer on. The machine will turn on automatically when reaching the setting time.
- Timer off. The machine will turn off automatically when reaching the setting time.
- Timer on/off. The machine will turn on automatically when reaching the setting “on” time, and then turn off automatically when reaching the setting “off” time.
- Timer off/on. The machine will turn off automatically when reaching the setting “off” time, and then turn on automatically when reaching the setting “on” time.
- The timer function will not change the AC current operation mode. Suppose AC is off now, it will not start up firstly after setting the “timer off” function. And when reaching the setting time, the timer LED will be off and the AC running mode has not been changed.
- The setting time is relative time.
- The AC will quit the timer function when it has malfunction

## SLEEP Function

- The **SLEEP** function is available in **COOLING**, **HEATING**, or **AUTO** modes.
- The operational process for sleep mode is as follows:
  - When cooling, the temperature rises 34°F (1°C) (to not higher than 86°F (30°C) every hour. After 2 hours, the temperature stops rising and the indoor fan is fixed at low speed.
  - When heating, the temperature decreases 34°F (1°C) (to not lower than 61°F (16°C)) every hour. After 2 hours, the temperature stops decreasing and the indoor fan is fixed at low speed. Anti−cold wind function takes priority.
- The operating time for the **SLEEP** mode is 8 hours, after which, the unit exits this mode and turns off.
- The timer setting is available in this mode.

## Auto−Restart Function

- The indoor unit has an auto−restart module that allows the unit to restart automatically. The module automatically stores the current settings and, in the case of a sudden power failure, will restore those setting automatically within 3 minutes after power returns.
- If there is a power failure while the unit is running, the compressor starts 3 minutes after the unit restarts. If the unit was already off before the power failure, the unit stands by.

## 46F (8°C) Heating

In the **HEATING** mode, the temperature can be set to as low as 46°F (8°C), preventing the indoor area from freezing if unoccupied during severe cold weather.

## ECO Function

- Used to enter the energy efficient mode.
  - Under the **COOLING** mode, press **ECO**, the remote controller adjusts the temperature automatically to 75°F (24°C), **AUTO** fan speed to save energy (however only if the set temperature is less than 75°F (24°C). If the set temperature is more than 75°F (24°C) and 86°F (30°C), press **ECO**, the fan speed will change to **AUTO**, the set temperature will remain unchanged.
- When AC receives signals, such as switch off, Turbo operation, Silence operation, Self clean operation, Forced **COOLING** operation, mode setting, Sleeping mode, or adjusting the set temperature to less than 75°F (24°C), it will exit the **ECO** operation.
- Operation time in ECO mode is 8 hours. After 8 hours the air conditioner exits this mode.
- If there is a malfunctioning temperature sensor in, the air conditioner will exit **ECO** mode.
- The indoor fan runs at auto fan when it enters the **ECO** mode. The setting temperature and setting fan speed can be changed with the remote controller.

## Self Clean

- Press “Self Clean” when the unit is in the **COOLING** or **DRYING** mode, the indoor unit will run at the low fan speed for 16 minutes then turn off.
- **Self Clean** keeps the indoor unit dry and prevents mold growth.

## Follow Me

- If you press “Follow Me” on the remote controller, the indoor unit will beep. This indicates the “Follow Me” function is active.
- Once active, the remote controller will send a signal every 3 minutes, with no beeps. The unit automatically sets the temperature according to the measurements from the remote controller.
- The unit will only change modes if the information from the remote controller makes it necessary, not from the unit’s temperature setting.
- If the unit does not receive a signal for 7 minutes or you press “Follow Me,” the function turns off. The unit regulates temperature based on its own sensor and settings.

## Silence

Press **SILENCE** on the remote controller to enable the **SILENCE** function. While this function is active, the indoor unit will run at faint breeze (1% fan speed), which reduces noise to the lowest possible level.

## Intelligent Eye

With the built−in infrared sensor, the indoor unit detects human movement. The compressor operates in a low frequency if you leave the room for 30 minutes. The compressor operates in a lower frequency if you leave the room for 120 minutes, and resumes automatically when you come back, which helps save energy.

## Information Inquiry

To enter information inquiry status, complete the following procedure within ten seconds:

- Press **LED** 3 times.
- Press **SWING** 3 times.
- If successful, you will hear beeps for two seconds.
- Use **LED** and **SWING** to cycle through the information displayed.
- Press **LED** to display the next code in the sequence. Press **SWING** to display the previous code.

Table 9 displays the information codes. The screen displays the code for two seconds, then the information for 25 seconds.

**Table 9—Information Codes**

| Displayed Code | Explanation | Additional Notes |
|---|---|---|
| T1 | T1 | T1 temperature |
| T2 | T2 | T2 temperature |
| T3 | T3 | T3 temperature |
| T4 | T4 | T4 temperature |
| TP | TP | TP temperature |
| Targeted Frequency | FT | Targeted Frequency |
| Actual Frequency | TR | Actual Frequency |
| Compressor Current | dL | N/A |
| Outdoor AC Voltage | UO | N/A |
| Indoor capacity test | Sn | N/A |
| Reserve | −− | Running mode |
| Outdoor Fan Speed | Pr | Outdoor fan speed |
| EXV opening angle | LR | EXV opening angle |
| Indoor fan speed | IR | Indoor fan speed |
| Indoor humidity | HU | N/A |
| Adjusted setting temperature | TT | N/A |
| Indoor dust concentrations | DT | N/A |
| WIFI signal strength | IF | N/A |
| GA algorithm frequency | OT | N/A |

# TROUBLESHOOTING

## Safety

**⚠ WARNING**

**UNIT DAMAGE HAZARD**

Electricity remains in capacitors even when the power supply is off. Ensure the capacitors are fully discharged before troubleshooting.

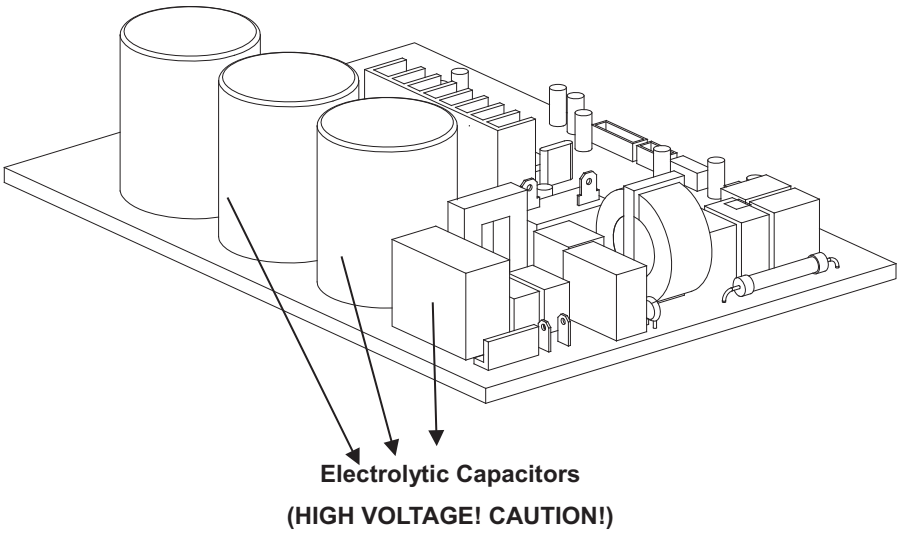


**Fig. 11 – Electrolytic Capacitors**

For other models, please connect discharge resistance (approximately 100Ω 40W) or a soldering iron (plug) between the +, − terminals of the electrolytic capacitor on the contrary side of the outdoor PCB.

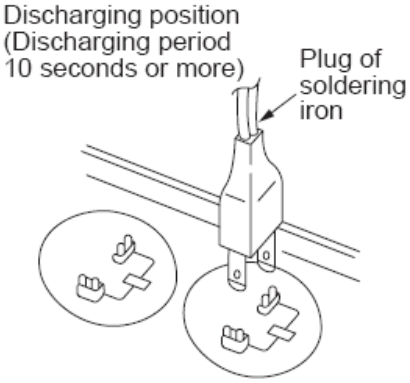


**Fig. 12 – Discharge Position**

**NOTE**: Fig. 12 is for reference only. Actual appearances may vary.

# TROUBLESHOOTING (CONT)

## Error Display (Indoor Unit)

When the indoor unit encounters a recognized error, the indicator light flashes in a corresponding series, the timer display may turn on or begin flashing, and an error code displays. These error codes are described in Table 10.

**Table 10—Error Codes**

| Display | Error Information | Solution |
|---|---|---|
| E0/EA | Indoor unit EEPROM parameter error | Page 23 |
| E1 | Indoor / outdoor units communication error | Pages 24 – 25 |
| E3 | The indoor fan speed is operating outside of the normal range | Page 26 |
| E4 | Indoor room temperature sensor T1 is in open circuit or has short circuited | Pages 23 and 32 |
| E5 | Evaporator coil temperature sensor T2 is in open circuit or has short circuited | Page 32 |
| EB | Communication error between the indoor PCB and display board | Page 33 |
| EF | Intelligent eye module error | Page 28 |
| F0 | Overload current protection | Page 34 |
| F1 | Outdoor ambient temperature sensor T4 open circuit or short circuit | Page 32 |
| F2 | Condenser coil temperature sensor T3 is in open circuit or has short circuited | Page 32 |
| F3 | Compressor discharge temperature sensor TP open circuit or short circuit | Page 32 |
| F4 | Outdoor unit EEPROM parameter error | Page 23 |
| F5 | The outdoor fan speed is operating outside of the normal range | Page 26 |
| P0 | IPM malfunction or IGBT over–strong current protection | Page 35 |
| P1 | Over voltage or over low voltage protection | Page 29 |
| P2 | High temperature protection of IPM module | Page 30 |
| P4 | Inverter compressor drive error | Page 31 |

**For other codes**

The display board may show a garbled code or a code undefined by the service manual. Ensure that this code is not a temperature reading.

**Troubleshooting**

Test the indoor unit using the remote controller. If the unit display is working however will not respond to the remote, the indoor PCB requires replacement. If there is no display after pressing the “LED” button and the unit responds, the display board requires replacement.

# ERROR DIAGNOSIS AND TROUBLESHOOTING WITHOUT ERROR CODE

**⚠ WARNING**

**UNIT DAMAGE HAZARD**

Be sure to turn off unit before any maintenance to prevent damage or injury.

**Table 11—Remote Maintenance**

| Remote Maintenance | Electrical Circuit | | | | | | | Refrigerant Circuit | | | | | | | Others | | | | | |
|---|---|---|---|---|---|---|---|---|---|---|---|---|---|---|---|---|---|---|---|---|
| **Possible causes of trouble** | **Power failure** | **The main power tripped** | **Loose connections** | **Faulty transformer** | **The voltage is too high or too low** | **The remote control is powered off** | **Broken remote control** | **Dirty air filter** | **Dirty condenser fins** | **The setting temp is higher/lower than the room's (cooling/heating)** | **The ambient temp. is too high/low when the mode is cooling/heating** | **Fan mode** | **SILENCE function is activated (optional function)** | **Frosting and defrosting frequently** | **Heavy load condition** | **Loose hold down bolts and/or screws** | **Not air tight** | **Air inlet or outlet of either unit is blocked** | **Interference from cell phones towers and remote boosters** | **Shipping plates remained attached** |
| Unit will not start | ☆ | ☆ | ☆ | ☆ | | | | | | | | | | | | | | | | |
| Operation is erratic, unpredictable or unit is unresponsive | | | | | | | | | | | | | | | | | | | ☆ | |
| Cannot set desired temp. | | | | | | ☆ | ☆ | | | | | | | | | | | | | |
| Unit is on but the wind is not cold (hot) | | | | | | | | | | ☆ | ☆ | ☆ | | | | | | | | |
| Unit runs, but shortly stops | | | | | ☆ | | | | | ☆ | ☆ | | | | | | | | | |
| The unit starts up and stops often | | | | | ☆ | | | | | | ☆ | | | ☆ | | | | ☆ | | |
| Unit runs continuously however insufficient cooling (heating) | | | | | | | | ☆ | ☆ | ☆ | ☆ | | ☆ | | ☆ | | ☆ | ☆ | | |
| Cool can not change to heat | | | | | | | | | | | | | | | | | | | | |
| Unit is noisy | | | | | | | | | | | | | | | | ☆ | | | | ☆ |
| Unit emits bad odor | | | | | | | | ☆ | | | | | | | | | | | | |
| **Test method/ remedy** | Test voltage | Close the power switch | Inspect connections – tighten | Change the transformer | Test voltage | Replace the battery of the remote control | Replace the remote control | Clean or replace | Clean | Adjust the setting temp. | Turn the AC later | Adjust to cool mode | Turn off SILENCE function. | Turn the AC later | Check the heat load | Tighten bolts or screws | Close all windows and doors | Remove the obstacles | Reconnect the power or press ON/OFF button on remote control to restart | Remove them |

# ERROR DIAGNOSIS AND TROUBLESHOOTING WITHOUT ERROR CODE (CONT)

**Table 12—Field Maintenance**

| Field Maintenance | Electrical Circuit | | | | | | | | | | | | | | |
|---|---|---|---|---|---|---|---|---|---|---|---|---|---|---|---|
| **Possible causes of trouble** | **Power failure** | **Blown fuse or varistor** | **Loose connections** | **Shorted or broken wires** | **Safety device opens** | **Faulty thermostat/ room temp sensor** | **Wrong setting place of temp sensor** | **Faulty transformer** | **Shorted or open capacitor** | **Faulty magnetic contact for compressor** | **Faulty magnetic contact for fan** | **Low voltage** | **Faulty stepping motor** | **Shorted or grounded compressor** | **Shorted or grounded fan motor** |
| Unit will not start | ☆ | ☆ | ☆ | ☆ | ☆ | | | ☆ | | | | | | | |
| Compressor will not start however the fan runs | | | | ☆ | | ☆ | | | ☆ | ☆ | | | | ☆ | |
| Compressor and condenser (outdoor) fan will not start | | | | ☆ | | ☆ | | | | ☆ | | | | | |
| Evaporator (indoor) fan will not start | | | | ☆ | | | | | ☆ | | ☆ | | | | ☆ |
| Condenser (out-door) fan will not start | | | | ☆ | | ☆ | | | ☆ | | ☆ | | | | ☆ |
| Unit runs but shortly stops | | | | | | | | | | ☆ | | ☆ | | | |
| Compress or short cycles due to overload | | | | | | | | | | ☆ | | ☆ | | | |
| High discharge pressure | | | | | | | | | | | | | | | |
| Low discharge pressure | | | | | | | | | | | | | | | |
| High suction pressure | | | | | | | | | | | | | | | |
| Low suction pressure | | | | | | | | | | | | | | | |
| Unit runs continuously but insufficient cooling | | | | | | | | | | | | | | | |
| Too cool | | | | | | ☆ | ☆ | | | | | | | | |
| Compressor is noisy | | | | | | | | | | | | | | | |
| Horizontal louver can not revolve | | | ☆ | ☆ | | | | | | | | | ☆ | | |
| **Test method / remedy** | Test voltage | Inspect fuse type & size | Inspect connections - tighten | Test circuits with tester | Test continuity of safety device | Test continuity of thermostat / sensor & wiring | Place the temp. sensor at the central of air in-let grille | Check control circuit with tester | Check capacitor with tester | Test continuity of coil & contacts | Test continuity of coil & contacts | Test voltage | Replace the stepping motor | Check resistance with Megger tester | Check resistance with Megger tester |

# ERROR DIAGNOSIS AND TROUBLESHOOTING WITHOUT ERROR CODE (CONT)

**Table 13—Field Maintenance (Con't)**

| Field Maintenance | Refrigerant Circuit | | | | | | | | | | | | | | | | | |
|---|---|---|---|---|---|---|---|---|---|---|---|---|---|---|---|---|---|---|
| **Possible causes of trouble** | **Compressor stuck** | **Refrigerant Shortage** | **Restricted liquid line** | **Dry air filter** | **Dirty evaporator coil** | **Insufficient air through evaporator coil** | **Refrigerant overcharge** | **Dirty or partially blocked condenser** | **Air or non-condensable gas in refrigerant cycle** | **Short cycling of condensing air** | **High temp. condensing medium** | **Insufficient condensing medium** | **Broken compressor internal parts** | **Insufficient compressor** | **Expansion valve obstructed** | **Expansion valve or capillary tube closed completely** | **Leaking power element on expansion valve** | **Power installation of feeler bulb** |
| Unit will not start | | | | | | | | | | | | | | | | | | |
| Compressor will not start however the fan runs | ☆ | | | | | | | | | | | | | | | | | |
| Compressor and condenser (outdoor) fan will not start | | | | | | | | | | | | | | | | | | |
| Evaporator (indoor) fan will not start | | | | | | | | | | | | | | | | | | |
| Condenser (out-door) fan will not start | | | | | | | | | | | | | | | | | | |
| Unit runs but shortly stops | | ☆ | ☆ | | | | ☆ | ☆ | | | | | | | | ☆ | ☆ | |
| Compress or short cycles due to overload | | ☆ | | | | | ☆ | ☆ | | | | | | | | | | |
| High discharge pressure | | | | | | | ☆ | ☆ | ☆ | ☆ | ☆ | ☆ | | | | | | |
| Low discharge pressure | | ☆ | | | | | | | | | | | | ☆ | | | | |
| High suction pressure | | | | | | | ☆ | | | | | | | ☆ | | | | ☆ |
| Low suction pressure | | ☆ | ☆ | ☆ | ☆ | ☆ | | | | | | | | | ☆ | ☆ | ☆ | |
| Unit runs continuously but insufficient cooling | | ☆ | ☆ | ☆ | ☆ | ☆ | | ☆ | ☆ | ☆ | | | | ☆ | | | | |
| Too cool | | | | | | | | | | | | | | | | | | |
| Compressor is noisy | | | | | | | ☆ | | | | | | ☆ | | | | | |
| Horizontal louver can not revolve | | | | | | | | | | | | | | | | | | |
| **Test method / remedy** | Replace the compressor | Leak test | Replace the restricted part | Clean or replace | Clean coil | Check fan | Change charged refrigerant volume | Clean condenser or remove obstacle | Purge, evacuate and recharge | Remove obstruction to air flow | Remove obstruction in air or water flow | Remove obstruction in air or water flow | Replace compressor | Test compressor efficiency | Replace valve | Replace valve | Replace valve | Fix feeler bulb |

# ERROR DIAGNOSIS AND TROUBLESHOOTING WITHOUT ERROR CODE (CONT)

**Table 14—Field Maintenance (Con't)**

| Field Maintenance | Others | | | | |
|---|---|---|---|---|---|
| **Possible causes of trouble** | **Heavy load condition** | **Loosen hold down bolts and/or screws** | **Shipping plates remain attached** | **Poor choices of capacity** | **Contact of piping with other piping or external plate** |
| Unit will not start | | | | | |
| Compressor will not start however the fan runs | | | | | |
| Compressor and condenser (outdoor) fan will not start | | | | | |
| Evaporator (indoor) fan will not start | | | | | |
| Condenser (outdoor) fan will not start | | | | | |
| Unit runs but shortly stops | | | | | |
| Compress or short cycles due to overload | | | | | |
| High discharge pressure | | | | | |
| Low discharge pressure | | | | | |
| High suction pressure | ☆ | | | | |
| Low suction pressure | | | | | |
| Unit runs continuously but insufficient cooling | ☆ | | | ☆ | |
| Too cool | | | | | |
| Compressor is noisy | | ☆ | ☆ | | ☆ |
| Horizontal louver can not revolve | | | | | |
| **Test method / remedy** | Check heat load | Tighten bolts or screws | Remove them | Choose AC of larger capacity or add the number of units | Fix piping as as not to touch each other or external pipe |

# QUICK MAINTENANCE BY ERROR CODE

If you do not have the time to test whether specific parts are faulty, you can directly change the required parts according the error code. You can find the parts to replace by error code in Tables 15 and 16.

**Table 15—Error Codes**

| Part Requiring Replacement | Error Code | | | | | | | | |
|---|---|---|---|---|---|---|---|---|---|
| | E0 | EA | E1 | E3 | E4 | E5 | EB | EF | F0 |
| Indoor PCB | ✓ | ✓ | ✓ | ✓ | ✓ | ✓ | ✓ | x | x |
| Outdoor PCB | x | x | ✓ | x | x | x | x | x | ✓ |
| Display Board | x | x | x | x | x | x | ✓ | x | x |
| Reactor | x | x | ✓ | x | x | x | x | x | x |
| Indoor fan motor | x | x | x | ✓ | x | x | x | x | x |
| Outdoor fan motor | x | x | x | X | x | x | x | x | x |
| Temperature sensor | x | x | x | x | ✓ | ✓ | x | x | x |
| T2 Sensor | x | x | x | x | x | x | x | x | x |
| Additional refrigerant | x | x | x | x | x | x | x | x | x |
| Compressor | x | x | x | x | x | x | x | x | ✓ |
| IPM board | x | x | x | x | x | x | x | x | x |
| Outdoor unit | x | x | x | x | x | x | x | x | ✓ |
| Intelligent Eye | x | x | x | x | x | x | x | ✓ | x |

**Table 16—Error Codes**

| Part Requiring Replacement | Error Code | | | | | | | | |
|---|---|---|---|---|---|---|---|---|---|
| | F1 | F2 | F3 | F4 | F5 | P0 | P1 | P2 | P4 |
| Indoor PCB | x | x | x | x | x | x | x | x | x |
| Outdoor PCB | ✓ | ✓ | ✓ | ✓ | ✓ | ✓ | ✓ | ✓ | ✓ |
| Display Board | x | x | x | x | x | x | x | x | x |
| Reactor | x | x | x | x | x | x | ✓ | x | x |
| Indoor fan motor | x | x | x | x | x | x | x | x | x |
| Outdoor fan motor | x | x | x | x | ✓ | x | x | x | x |
| Temperature sensor | ✓ | ✓ | ✓ | x | x | x | X | x | x |
| T2 Sensor | x | x | x | x | x | x | x | x | x |
| Additional refrigerant | x | x | x | x | x | x | x | x | x |
| Compressor | x | x | x | x | x | ✓ | x | x | ✓ |
| IPM board | x | x | x | x | x | ✓ | ✓ | x | ✓ |
| Outdoor unit | x | x | x | x | x | x | x | x | x |
| Intelligent Eye | x | x | x | x | x | x | x | x | x |

# TROUBLESHOOTING BY ERROR CODE

## Common Check Procedures

**Temperature Sensor Check**

Disconnect the temperature sensor from PCB, measure the resistance value with a tester.

Temperature Sensors.

Room temp. (T1) sensor,

Indoor coil temp. (T2) sensor,

Outdoor coil temp.(T3) sensor,

Outdoor ambient temp.(T4) sensor,

Compressor discharge temp.(Tp) sensor.

Measure the resistance value of each winding by using the multi−meter.

**Compressor Checking**

Measure the resistance value of each winding by using the tester.

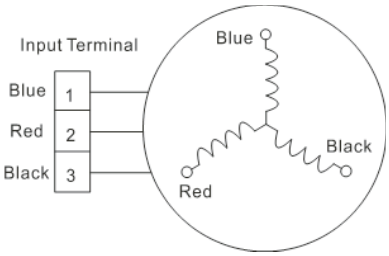


**Fig. 13 – Compressor Checking**

**Table 17—Compressor Checking**

| Position | Resistance Value |
|---|---|
| | ATM115D43UFZ2 |
| Blue – Red | 1.87Ω(20°C/68°F) |
| Blue – Black | |
| Red – Blue | |

**Fig. 14 – Compressor Checking**

**IPM Continuity Check**

Turn off the power, let the large capacity electrolytic capacitors discharge completely, and dismount the IPM. Use a digital tester to measure the resistance between P and UVWN; UVW and N.

**Table 18—IPM Continuity Check**

| Digital Tester | | Normal Resistance Value | Digital Tester | | Normal Resistance Value |
|---|---|---|---|---|---|
| (+) Red | (–) Black | | (+) Red | (–) Black | |
| P | N | ∞ (Several MΩ) | U | N | ∞ (Several MΩ) |
| | U | | V | | |
| | V | | W | | |
| | W | | (+) Red | | |

# DIAGNOSIS AND SOLUTION

## E0/F4/EA (EEPROM Parameter Error)

**Description:** Indoor or outdoor PCB main chip does not receive feedback from EEPROM chip.

**Recommended parts to prepare:**

- Indoor PCB
- Outdoor PCB

**Troubleshooting and Repair:**

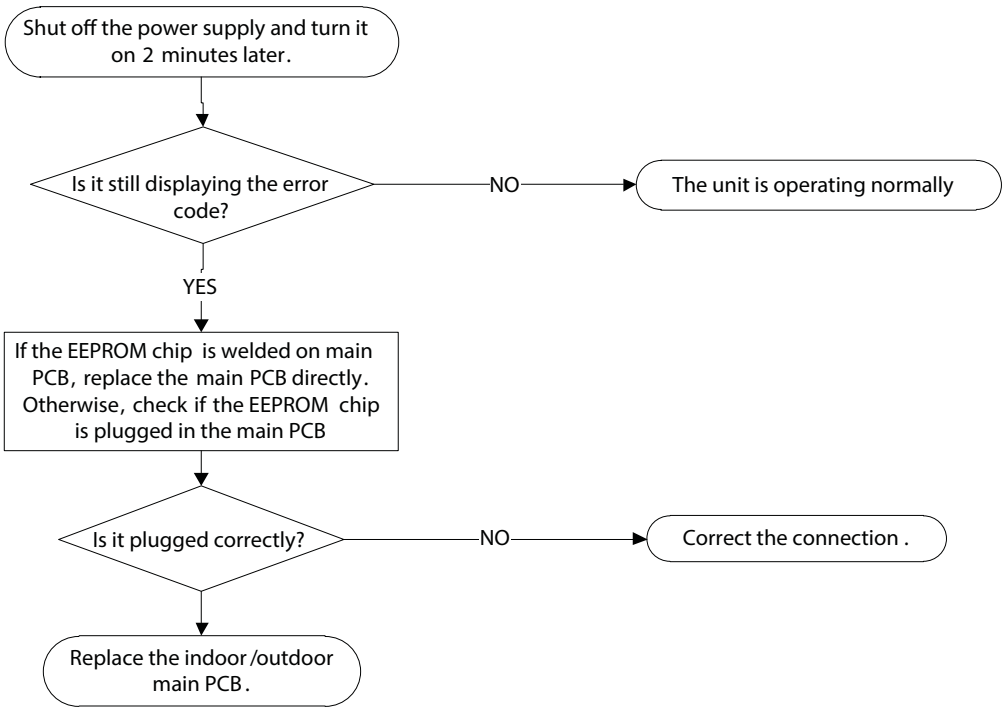


**Remarks:**

The location of the EEPROM chip on the indoor and outdoor PCB is shown in Figures 15 and 16:

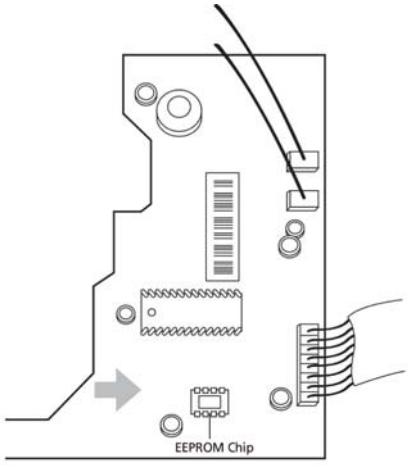


**Fig. 15 – EEPROM Chip (Indoor Unit)**

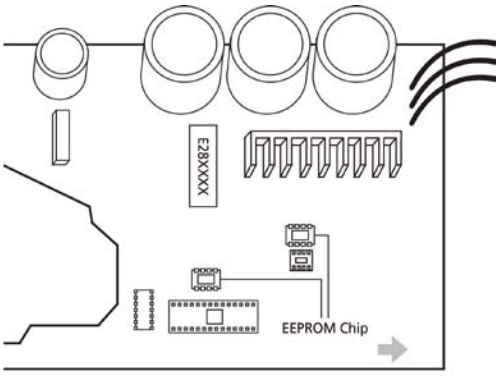


**Fig. 16 – EEPROM Chip (Outdoor Unit)**

**NOTE**: These images are for reference only.

# DIAGNOSIS AND SOLUTION (CONT)

## E1 (Indoor and Outdoor Unit Communication Error)

**Description:** The indoor unit has not received feedback from the outdoor unit for 150 seconds, four consecutive times.

**Recommended parts to prepare:**

- Indoor PCB
- Outdoor PCB
- Reactor

**Troubleshooting and Repair:**

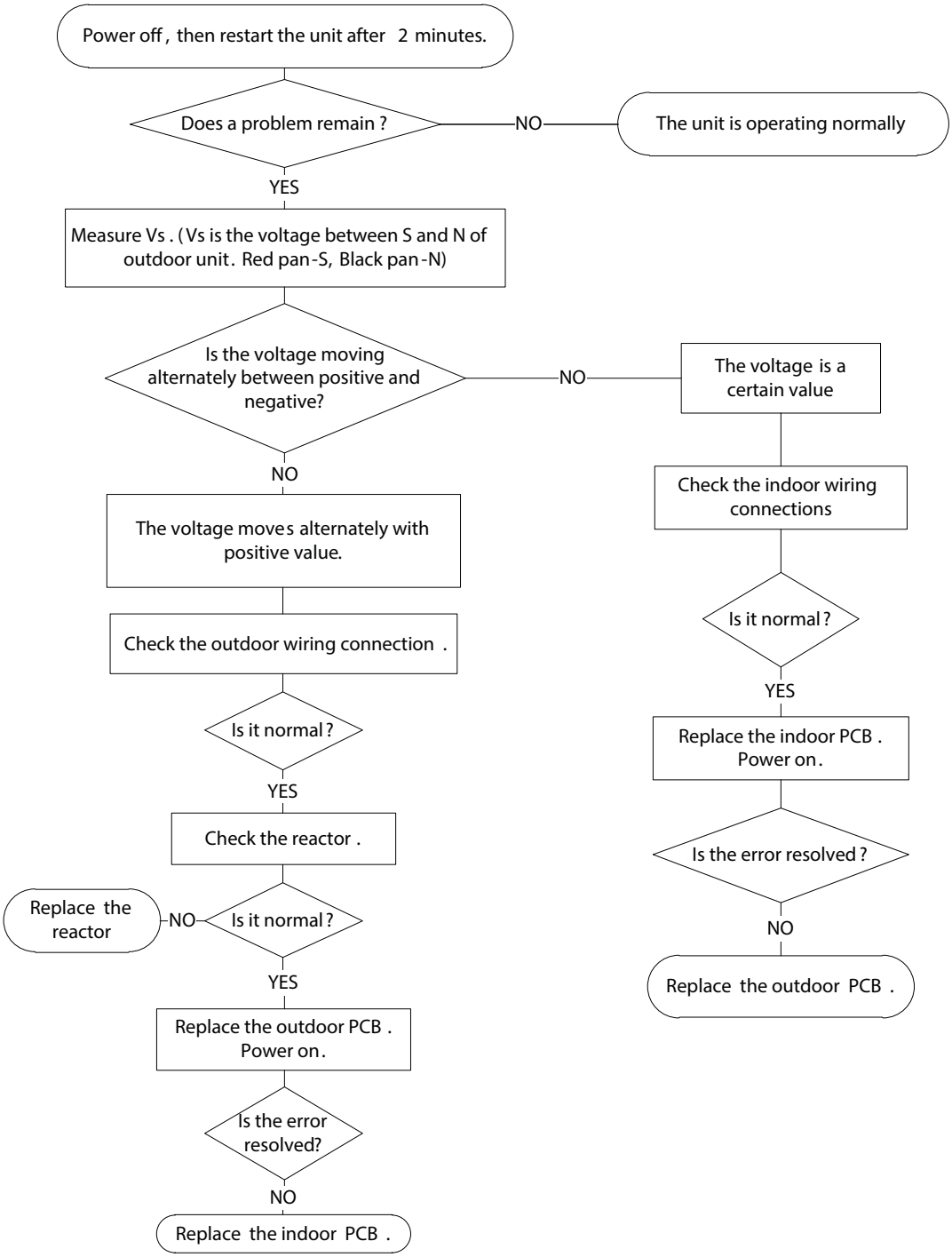

# DIAGNOSIS AND SOLUTION (CONT)

## E1 (Indoor and Outdoor Unit Communication Error) (Cont)

**Remarks:**

- Use a multimeter to test the DC voltage between the outdoor unit's 2 port and 3 port. The red pin of multimeter connects with the 2 port while the black pin is for 3 port.
- When the air conditioner is normal running, the voltage is moving alternately as positive values and negative values.
- If the outdoor unit has a malfunction, the voltage has always been the positive value.
- If the indoor unit has malfunction, the voltage is a fixed value.

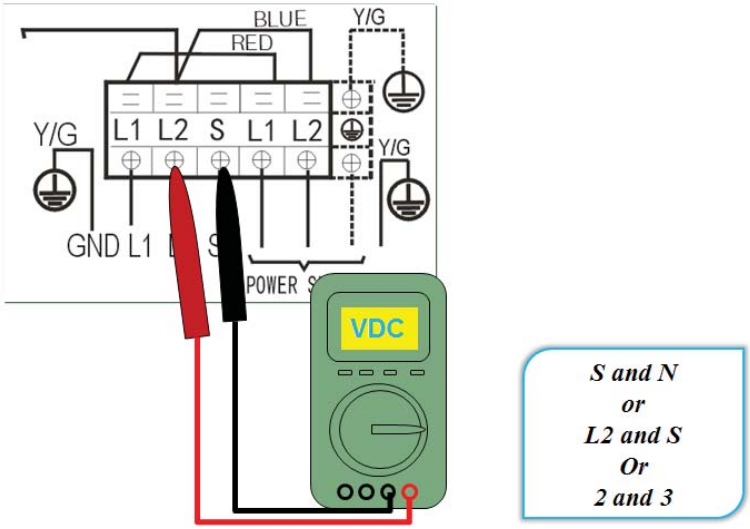


**Fig. 17 – Multimeter**

- Use a multimeter to test the resistance of the reactor that does not connect with the capacitor.
- The normal value should be around zero ohm. Otherwise, the reactor must have malfunction.

**Fig. 18 – Multimeter**

# DIAGNOSIS AND SOLUTION (CONT)

## E3/F5 (Fan speed is operating outside of the Normal Range)

**Description:** When the indoor fan speed maintains a low speed (ex. 300RPM) or a speed that's too high (ex.1500RPM) for a certain time, the unit stops and the LED displays the failure (E3). When the outdoor fan speed registers below 200RPM or over 1500RPM for an extended period of time, the unit stops and the LED displays the failure (F5).

**Recommended parts to prepare:**

- Wiring
- Faulty fan assembly
- Faulty fan motor
- Faulty PCB

**Troubleshooting and Repair:**

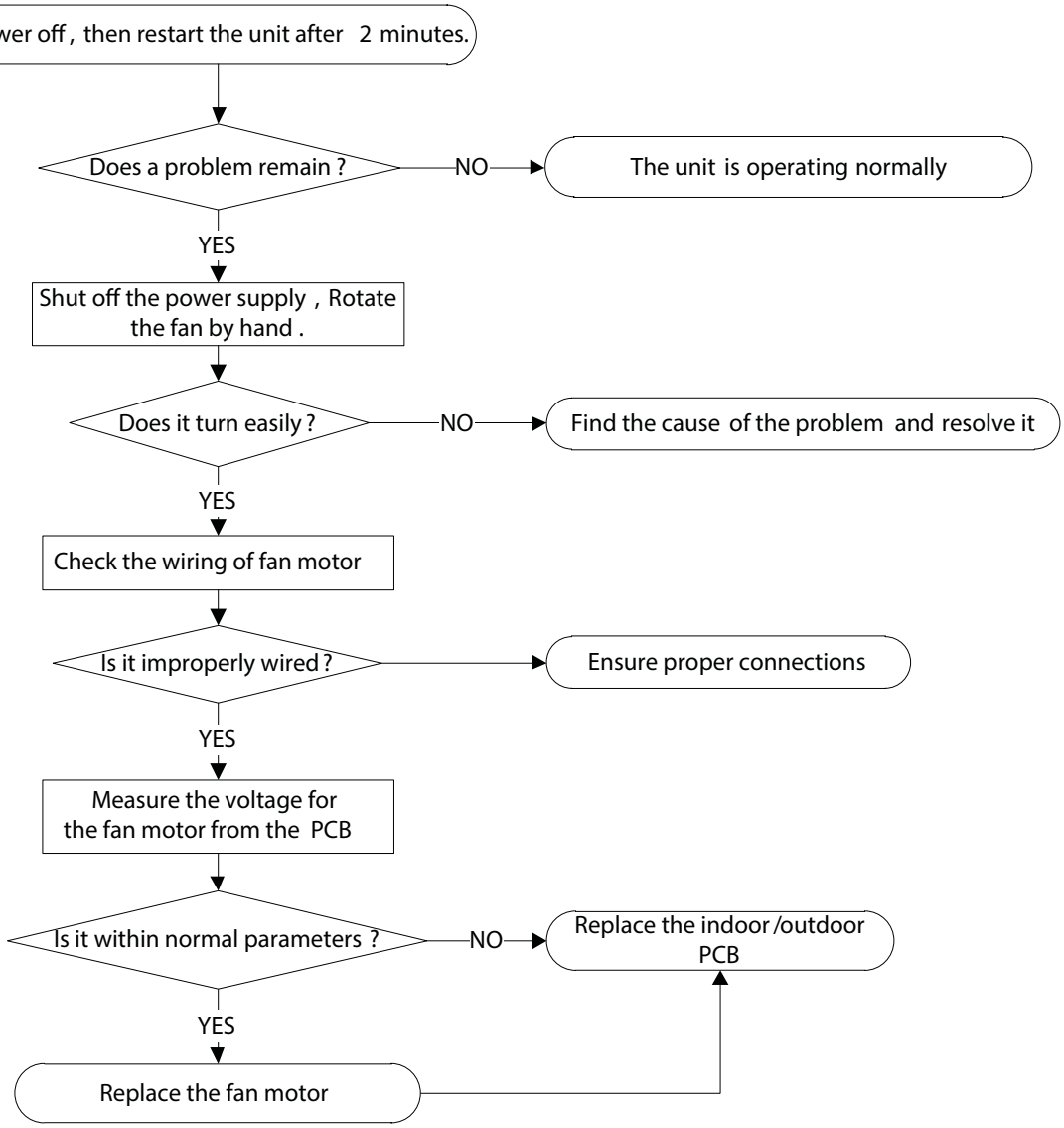

## Index

1. Indoor or Outdoor DC Fan Motor (control chip is in fan motor)

   Power on and when the unit is in standby, measure the voltage of pin1−pin3, pin4−pin3 in the fan motor connector. If the value of the voltage is not in the range shown in Table 19, the PCB must has problems and need to be replaced.

- DC motor voltage input and output (voltage: 220−240V~):

**Table 19—Voltage**

| No. | Color | Signal | Voltage |
|---|---|---|---|
| 1 | Red | Vs/Vm | 280V~380V |
| 2 | −−− | −−− | −−− |
| 3 | Black | GND | 0V |
| 4 | White | Vcc | 14−18.5V |
| 5 | Yellow | Vsp | 0~5.6V |
| 6 | Blue | FG | 14−18.5V |

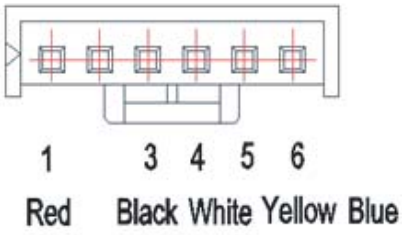


**Fig. 19 – Indoor DC Fan Motor**

2. Outdoor DC Fan Motor (control chip is in outdoor PCB)

   Power on and check if the fan can run normally, if the fan can run normally, the PCB must have a problem and needs to be replaced, If the fan can not run normally, measure the resistance of each pin (two). If the resistance is not equal to each other, the fan motor must have a problem and needs to be replaced, otherwise the PCB must has problems and needs to be replaced.

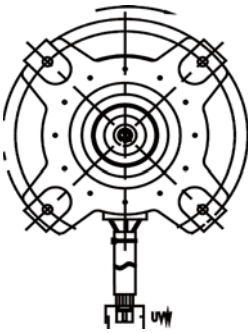

**Fig. 20 – Outdoor DC Fan Motor**

3. Indoor AC Fan Motor

   Power on and set the unit running in FAN mode at the high fan speed. After running for 15 seconds, measure the voltage of pin1 and pin2. If the value of the voltage is less than 100V(208~240V power supply) or 50V(115V power supply), the PCB must has problems and needs to be replaced.

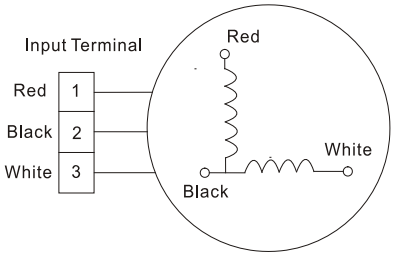


**Fig. 21 – Indoor AC Fan Motor**

# DIAGNOSIS AND SOLUTION (CONT)

## EF (Intelligent Eye Module Error Diagnosis and Solution)

**Description:** If the intelligent eye module malfunctions, the LED displays the failure.

**Recommended parts to prepare:**

- Intelligent Eye

**Troubleshooting and Repair:**

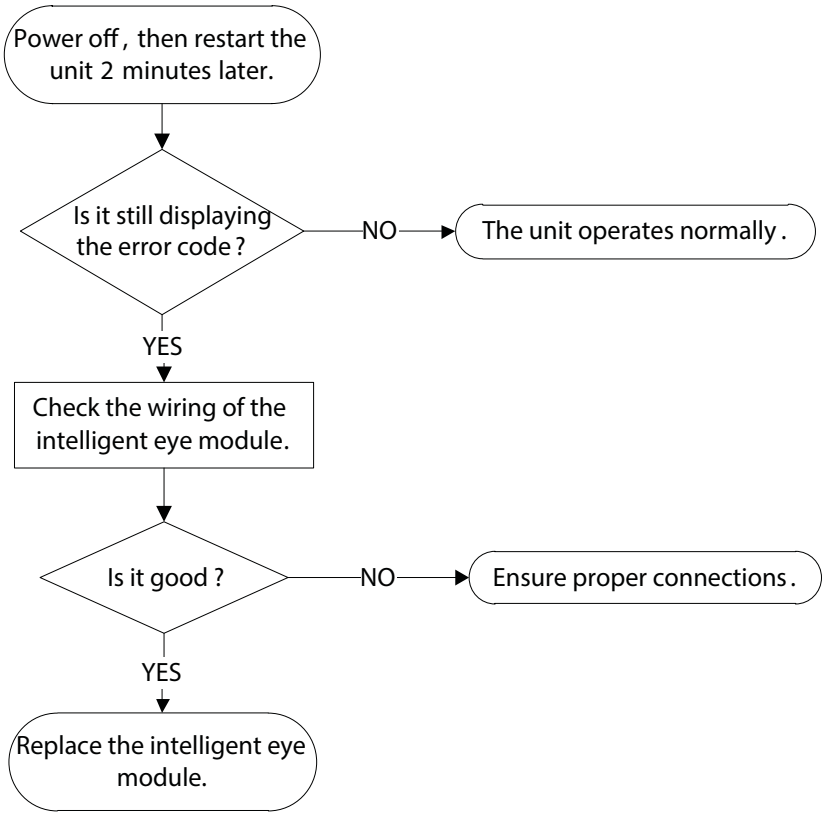

# DIAGNOSIS AND SOLUTION (CONT)

## P1 (Over voltage or too low voltage protection diagnosis and solution)

**Description:** Abnormal increases or decreases in voltage are detected by checking the specified voltage detection circuit.

**Recommended parts to prepare:**

- Power supply issues
- System leakage or blockage
- Faulty PCB

**Troubleshooting and Repair:**

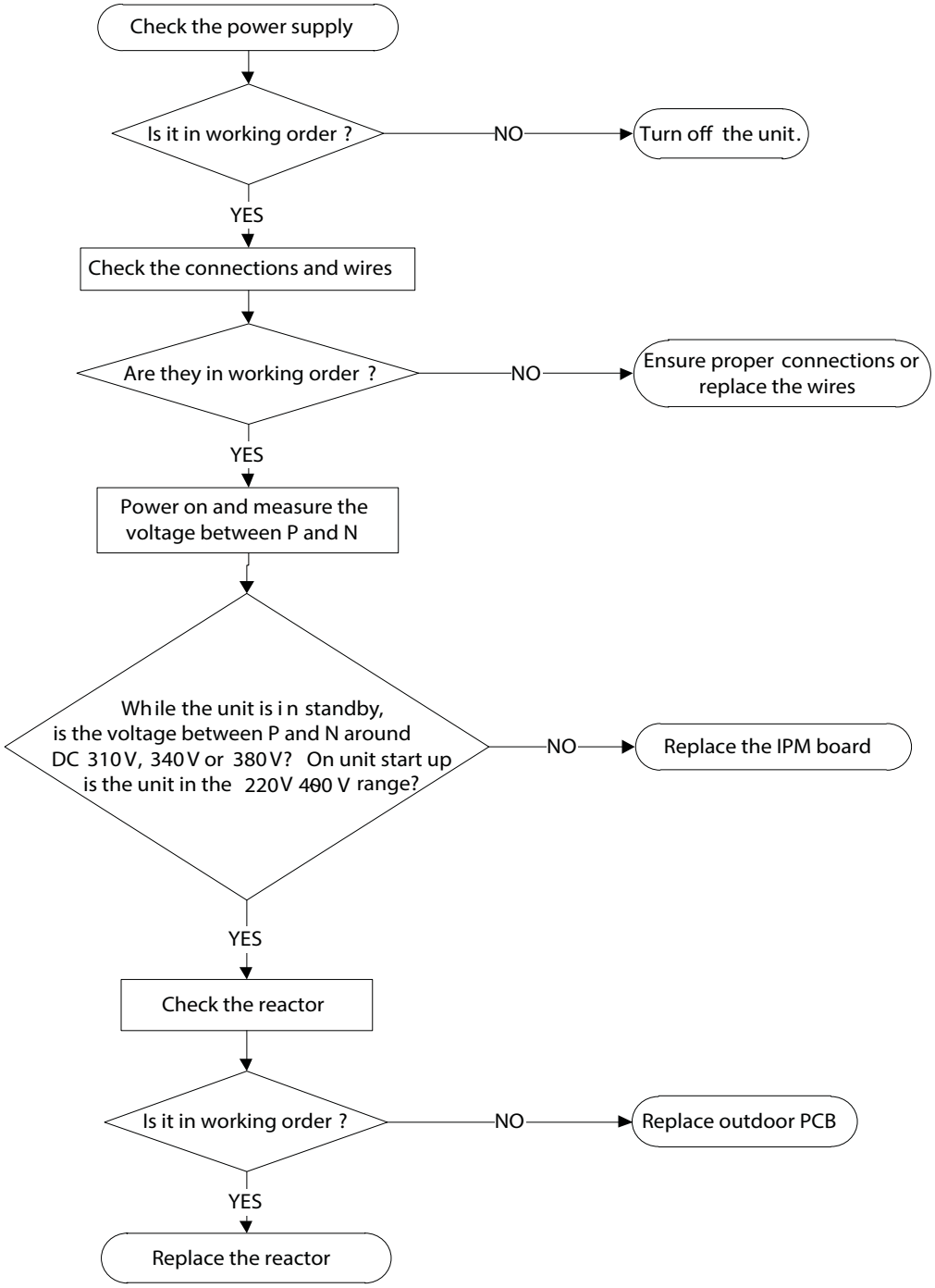

# DIAGNOSIS AND SOLUTION (CONT)

## P2 (High temperature protection of IPM module diagnosis and solution)

**Description:** If the temperature of IPM module is higher than limited value, the LED displays this failure code.

**Recommended parts to prepare:**

- Faulty PCB
- Connection problems

**Troubleshooting and Repair:**

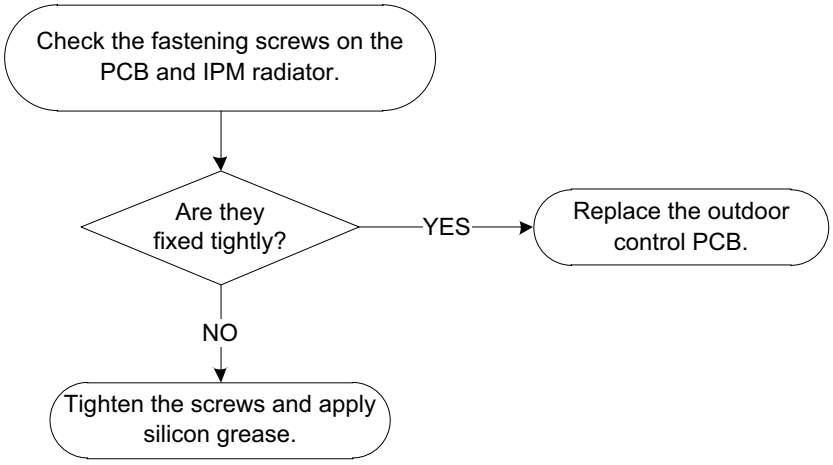

# DIAGNOSIS AND SOLUTION (CONT)

## P4 (Inverter compressor drive error diagnosis and solution)

**Description:** If the temperature of IPM module is higher than limited value, the LED displays this failure code.

**Recommended parts to prepare:**

- Wiring mistake
- PM malfunction
- Outdoor fan assembly faulty
- Compressor malfunction
- Outdoor PCB faulty

**Troubleshooting and Repair:**

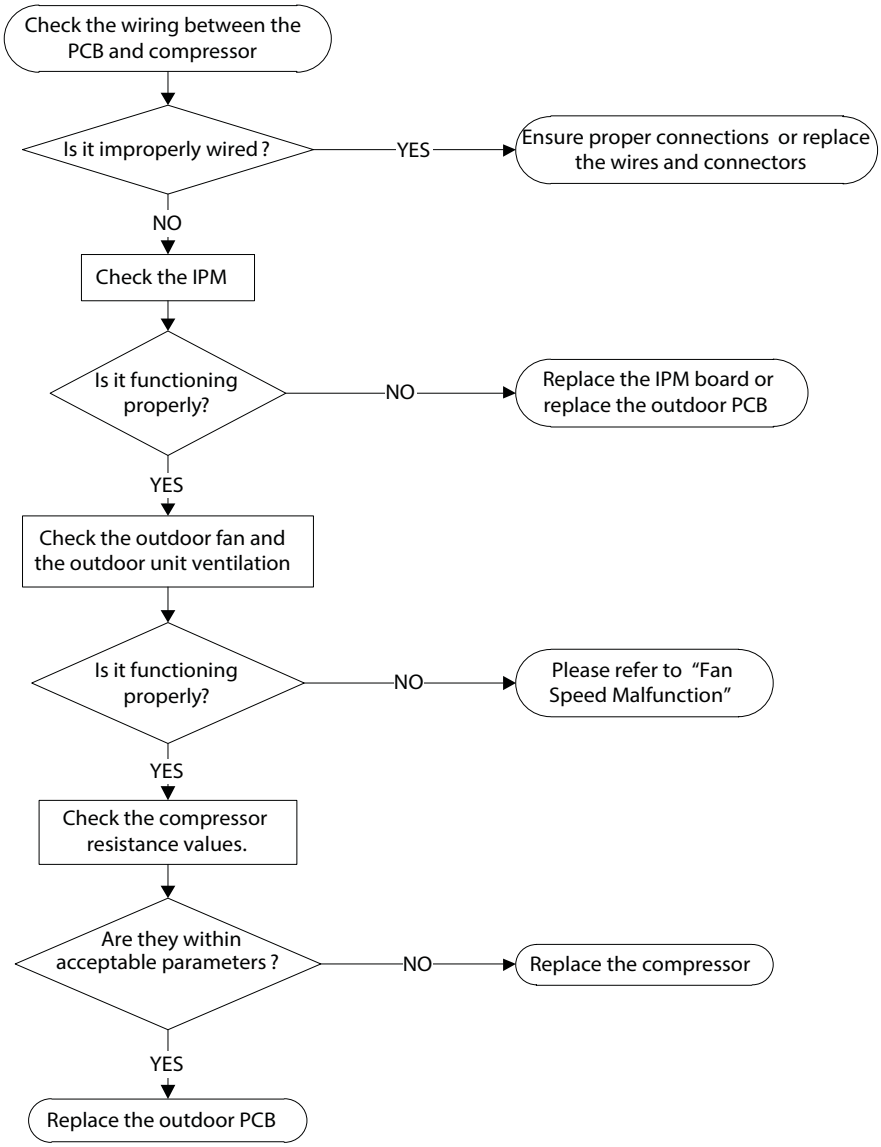

# DIAGNOSIS AND SOLUTION (CONT)

## E4/E5/F1/F2/F3 (Open circuit or short circuit of temperature sensor diagnosis and solution)

**Description:** If the sampling voltage is lower than 0.06V or higher than 4.94V, the LED displays the failure.

**Recommended parts to prepare:**

- Wiring mistake
- Faulty sensor
- Faulty PCB

**Troubleshooting and Repair:**

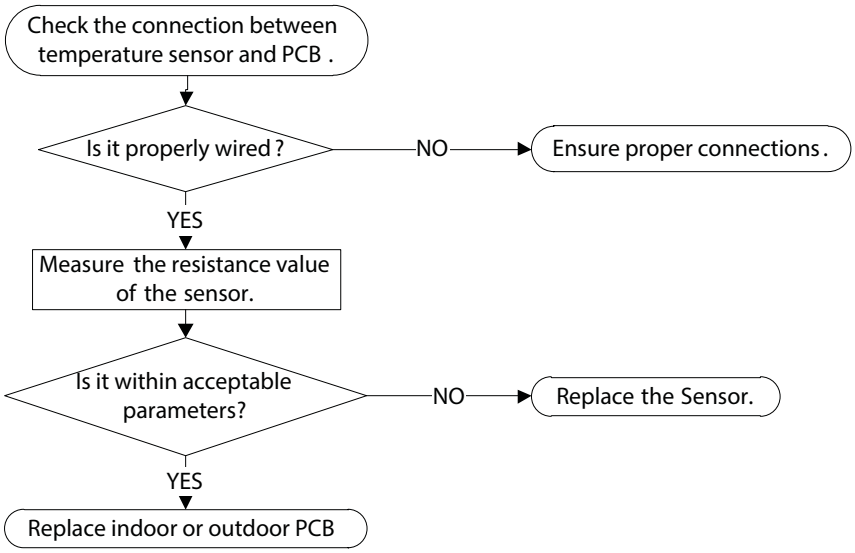

**Fig. 22 – Multimeter**

# DIAGNOSIS AND SOLUTION (CONT)

## Eb (Communication error between the Indoor PCB and Display Board)

**Description:** Indoor PCB does not receive feedback from the display board.

**Recommended parts to prepare:**

- Wiring mistake
- PCB faulty
- Display board malfunction

**Troubleshooting and Repair:**

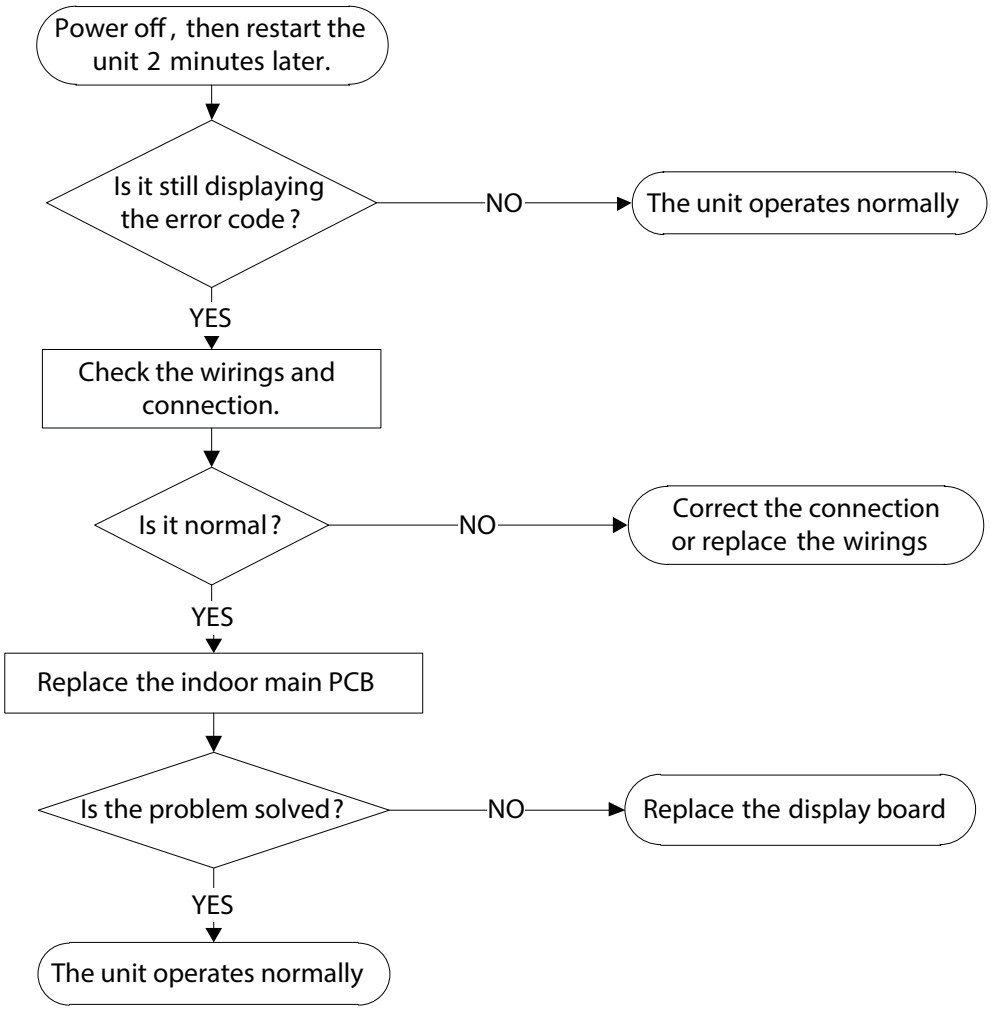

# DIAGNOSIS AND SOLUTION (CONT)

## F0 (Overload current protection diagnosis and solution)

**Description:** An abnormal current rise is detected by checking the specified current detection circuit.

**Recommended parts to prepare:**

- Power supply problems
- System blockage
- Faulty PCB
- Wiring mistake
- Compressor malfunction

**Troubleshooting and Repair:**

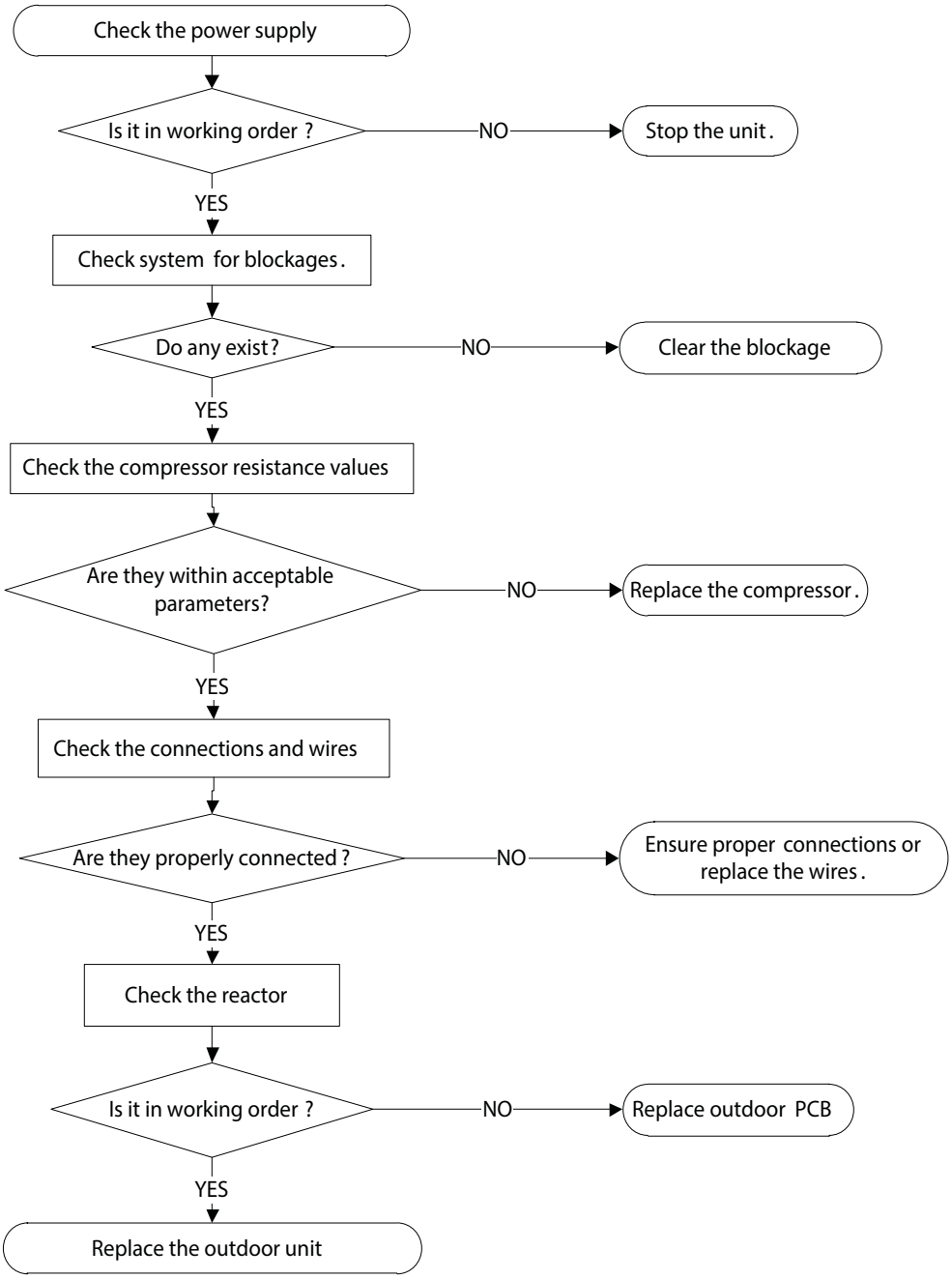

# DIAGNOSIS AND SOLUTION (CONT)

## P0 (IPM malfunction or IGBT over−strong current protection diagnosis and solution)

**Description:** When the voltage signal the IPM sends to the compressor drive chip is abnormal, the display LED displays “P0” and the air conditioner turns off.

**Recommended parts to prepare:**

- Wiring mistake
- IPM malfunction
- Faulty outdoor fan assembly
- Compressor malfunction
- Faulty outdoor PCB

**Troubleshooting and Repair:**

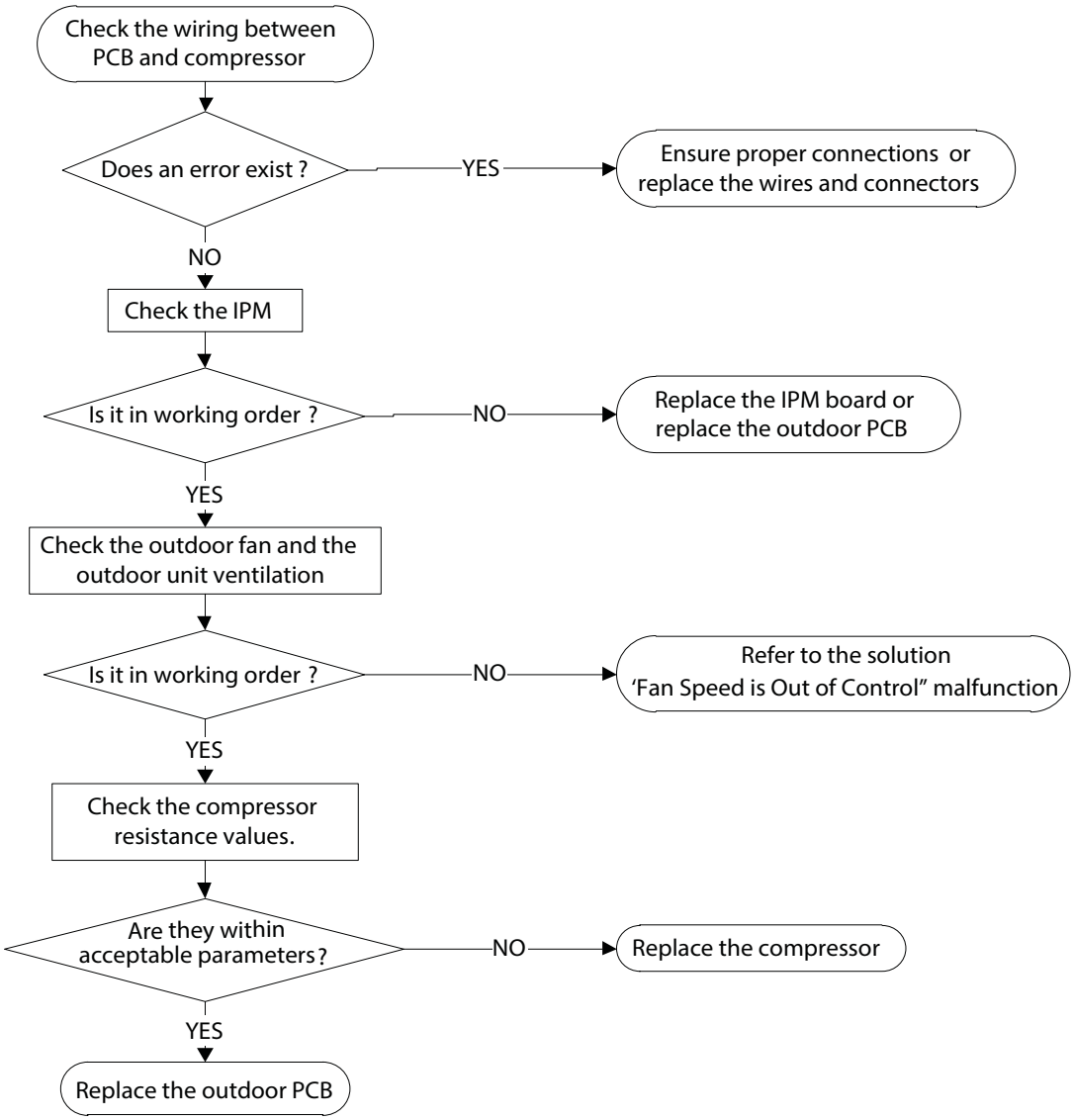

# DISASSEMBLY INSTRUCTIONS

## Indoor Unit (Front Panel)

| Procedure | Illustration |
|---|---|
| 1) Hold the front panel by the tabs on both sides and lift it (see CJ_OP_INV_001). | 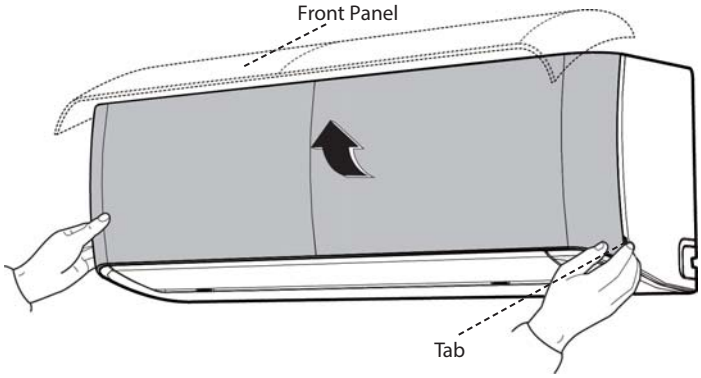 <br>CJ_OP_INV_001 |
| 2) Push up the bottom of the air filter while pressing the buttom of the middle parts, and then pull the air filter out (downwards) (see CJ_OP_INV_002). | 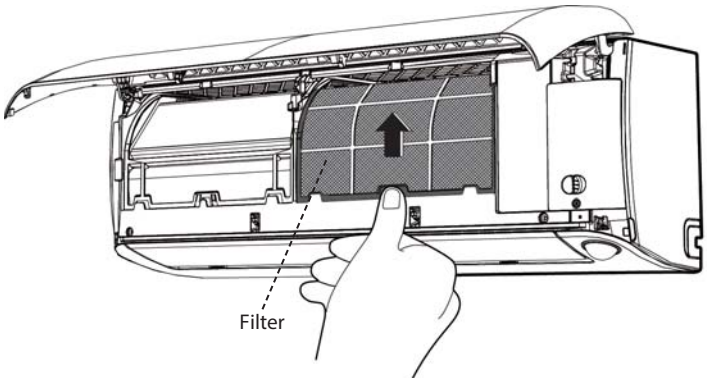 <br>CJ_OP_INV_002 |

# DISASSEMBLY INSTRUCTIONS (CONT)

## Indoor Unit (Front Panel) (Cont)

| Procedure | Illustration |
|---|---|
| 3) Open the horizontal louver and push the hook towards the right to open (see CJ_OP_INV_003). | 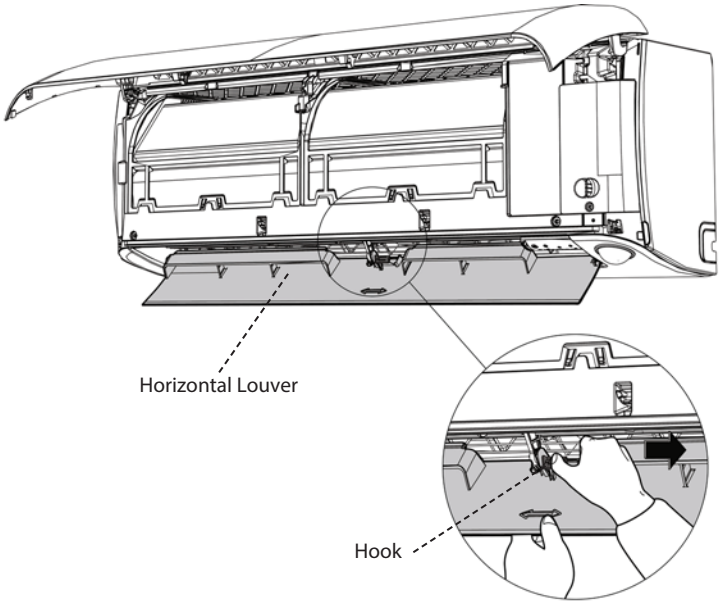 <br>CJ_OP_INV_003 |
| 4) Bend the horizontal louver lightly with both hands to loosen the hooks, then remove the horizontal louver (see CJ_OP_INV_004). | 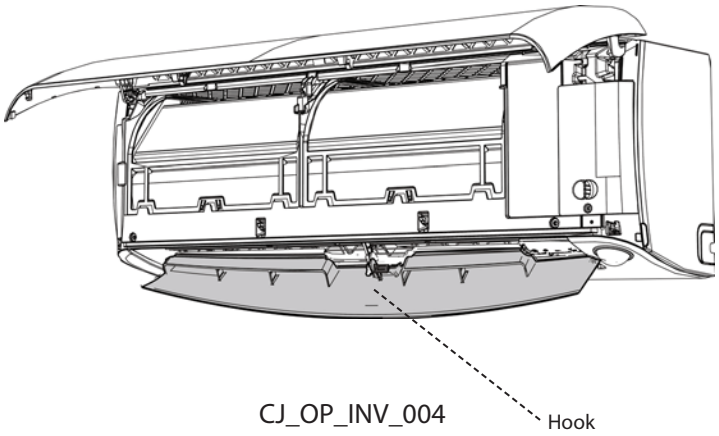 <br>CJ_OP_INV_004 |

# DISASSEMBLY INSTRUCTIONS (CONT)

## Indoor Unit (Front Panel) (Cont)

| Procedure | Illustration |
|---|---|
| 5) Remove 1 screw and then remove the electrical cover (see CJ_OP_INV_005).<br>6) Disconnect the two connectors for the display board (see CJ_OP_INV_005) . | 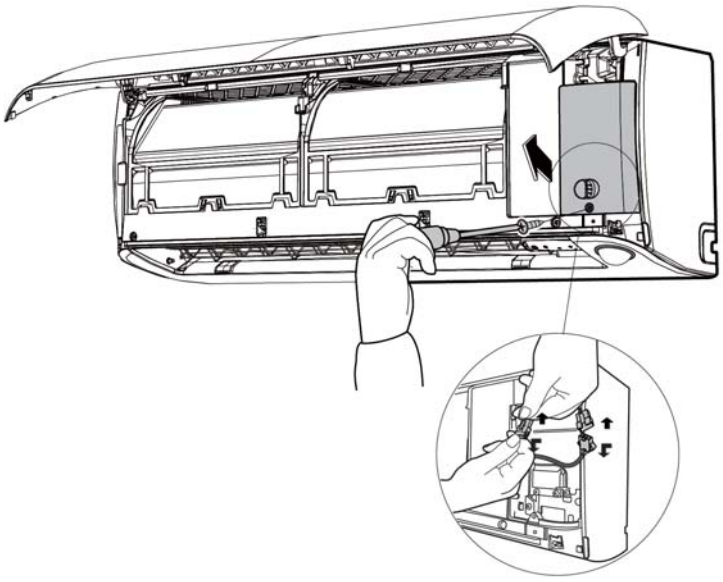 <br>CJ_OP_INV_005 |
| 7) Slid the front panel side to side to release each axis (see CJ_OP_INV_006 ) | 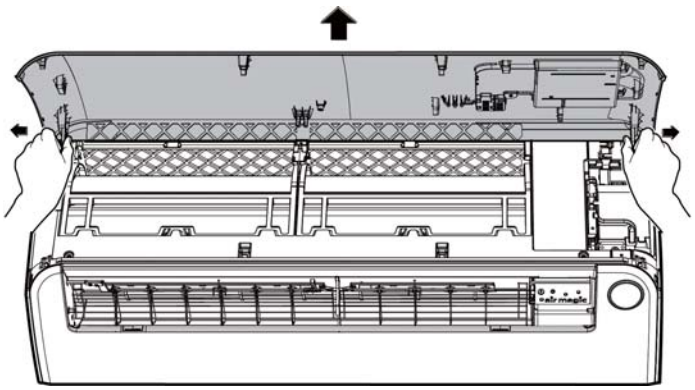 <br>CJ_OP_INV_006 |
| 8) Remove one screw and rotate the display board clockwise. Next, remove the clips. (see CJ_OP_INV_007). | 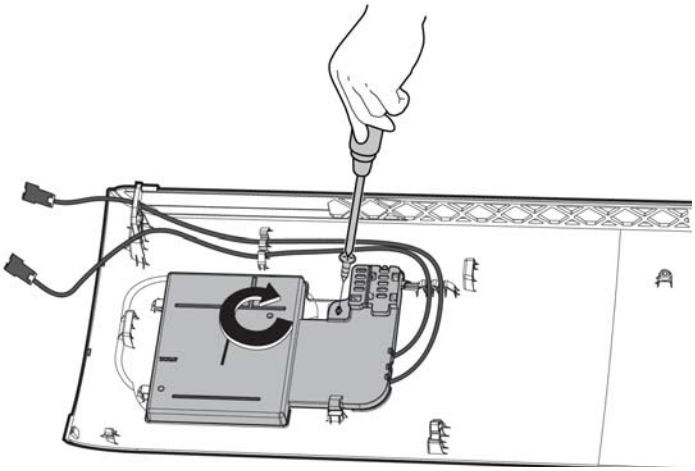 <br>CJ_OP_INV_007 |

# DISASSEMBLY INSTRUCTIONS (CONT)

## Electrical Parts

**NOTE**: Remove the front panel (refer front panel removal steps) before disassembling electrical parts.

| Procedure | Illustration |
|---|---|
| 1) Cut the ribbon with a shear, then pull out the coil temperature sensor (T2) (see CJ_OP_INV_010).<br>2) Remove the two screws used for the ground connection (see CJ_OP_INV_010). | 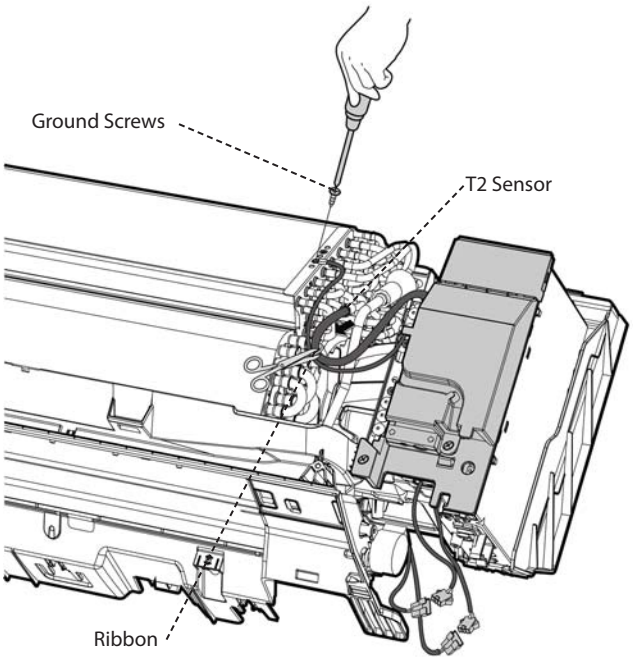 <br>CJ_OP_INV_010 |
| 3) Remove the screws (1 for the electronic cover and 1 for the terminal cover). Next, remove the electronic box cover and the terminal cover along the direction indicated in image (on the right side) to remove it.<br>4) Disconnect the fan motor connector and the step motor (see CJ_OP_INV_011). | 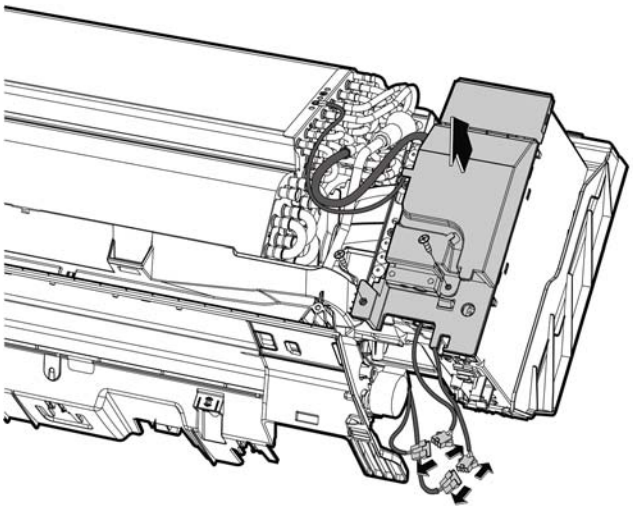 <br>CJ_OP_INV_011 |

# DISASSEMBLY INSTRUCTIONS (CONT)

## Electrical Parts (Cont)

| Procedure | Illustration |
|---|---|
| 5) Disconnect the wires. Then remove the electronic main box (CJ_OP_INV_011-2).<br>6) Pull out the Electrical control box along the direction indicated in the image. to remove it (CJ_OP_INV_011-2). | 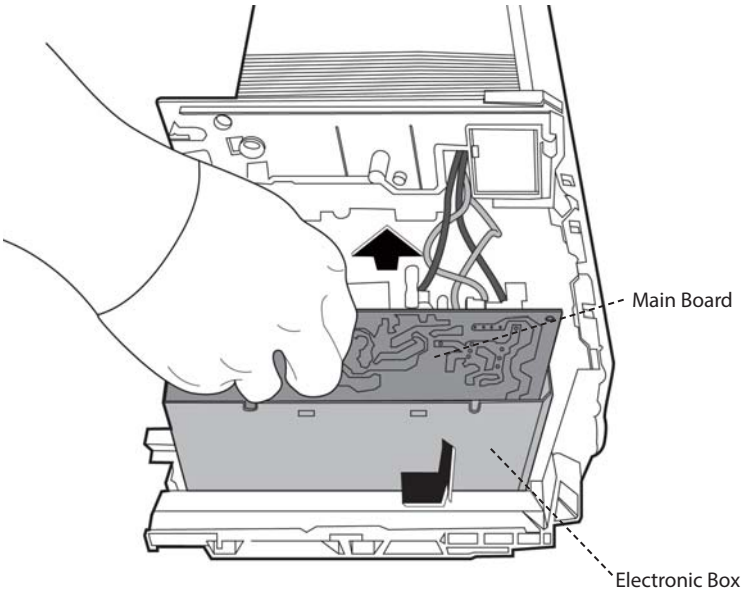 <br>CJ_OP_INV_012 |
| 7) The connector of each port is indicated in right image. (CJ_OP_INV_013). | 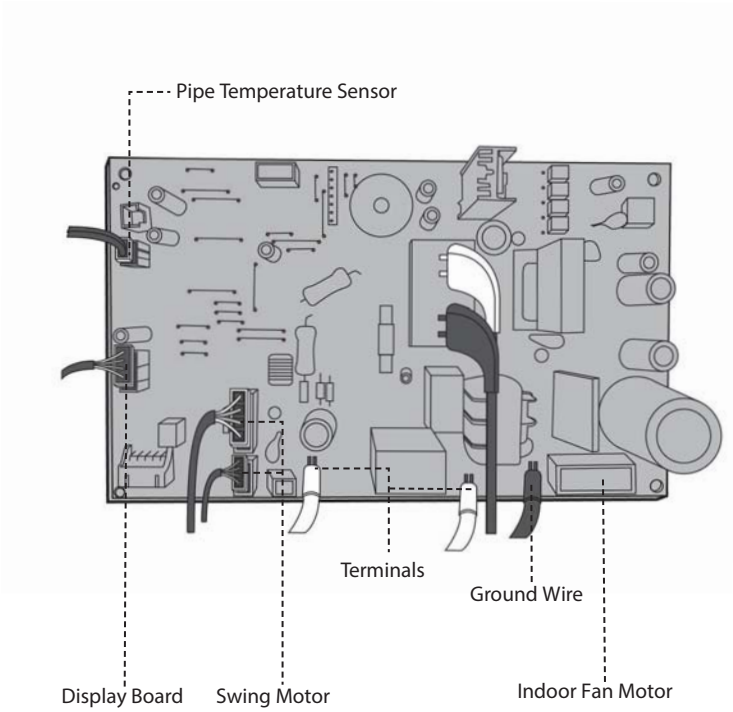 <br>CJ_OP_INV_013 |

# DISASSEMBLY INSTRUCTIONS (CONT)

## Evaporator

**NOTE**: Remove the front panel and electrical parts (refer to front panel and electrical parts removal steps) before disassembling evaporator.

| Procedure | Illustration |
|---|---|
| 1) Disassemble the pipe holder located at the rear of the unit (see CJ_OP_INV_014). | 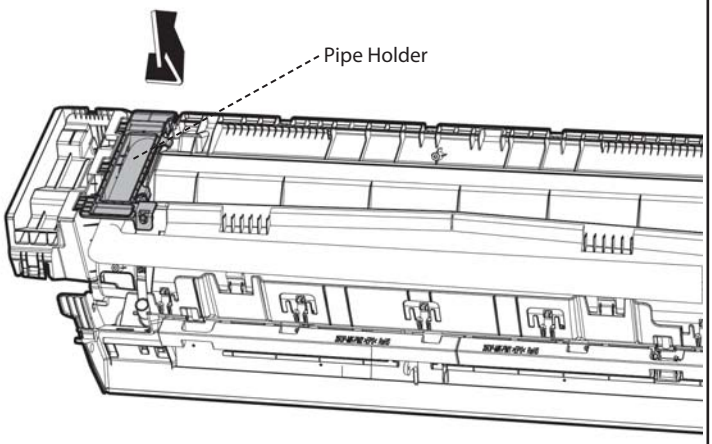  CJ_OP_INV_014 |
| 2) Remove the 3 screws on the evaporator located on the fixed plate (see CJ_OP_INV_015). | 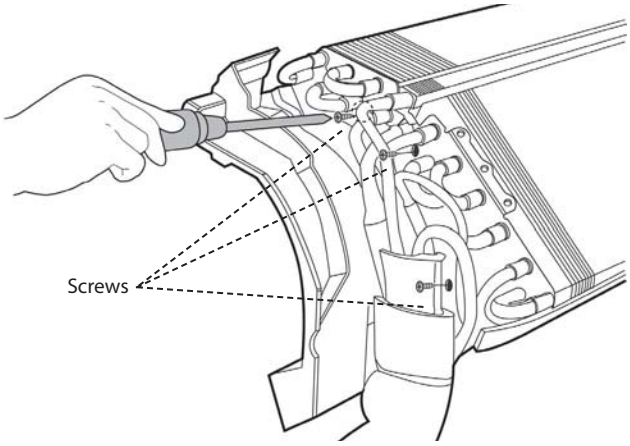  CJ_OP_INV_015 |
| 3) Remove the 2 screws on the evaporator located at the base of the bearing side (see CJ_OP_INV_016). | 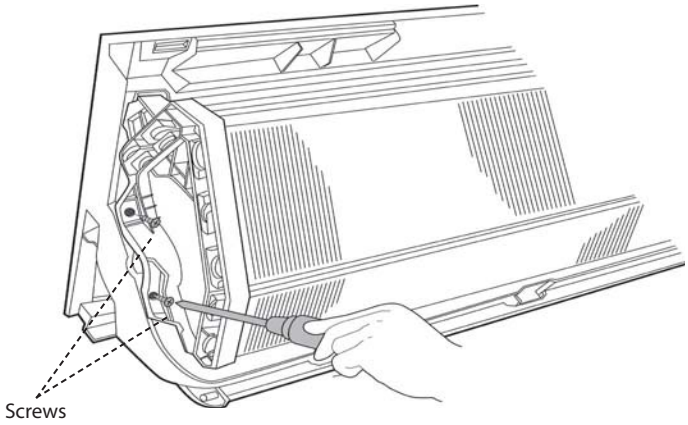  CJ_OP_INV_016 |

# DISASSEMBLY INSTRUCTIONS (CONT)

**Evaporator (Cont)**

| Procedure | Illustration |
|---|---|
| 4) Remove 1 screw on the evaporator located at the top of the evaporator. (see CJ_OP_INV_017). | 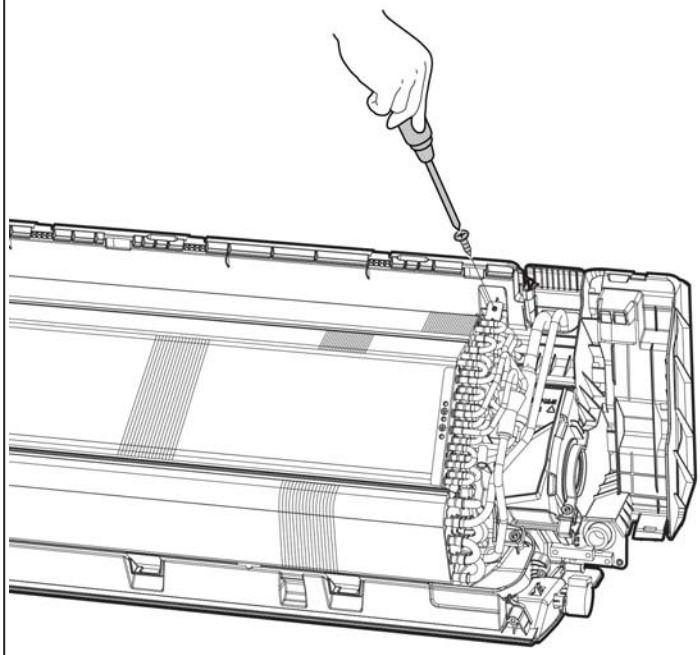 CJ_OP_INV_017 |
| 5) Pull out the evaporator (see CJ_OP_INV_017). | 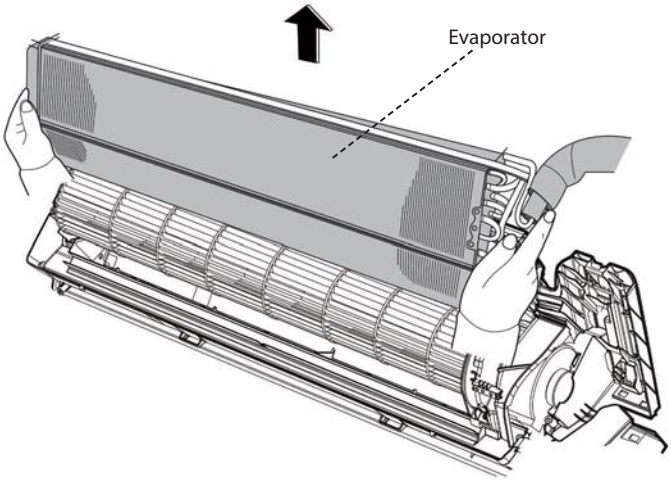  CJ_OP_INV_017 |

# DISASSEMBLY INSTRUCTIONS (CONT)

## Fan Motor and Fan

**NOTE**: Remove the front panel, electrical parts and evaporator (refer to front panel, electrical parts, and evaporator removal steps) before disassembling fan motor and fan.

| Procedure | Illustration |
|---|---|
| 1) Remove the two screws and remove the fixing board of the fan motor (see CJ_OP_INV_018). | 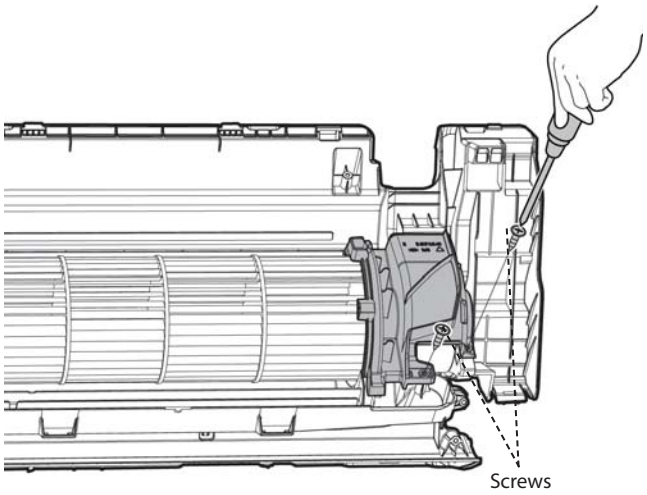 <br>CJ_OP_INV_018 |
| 2) Remove the bearing sleeve (see CJ_OP_INV_019). | 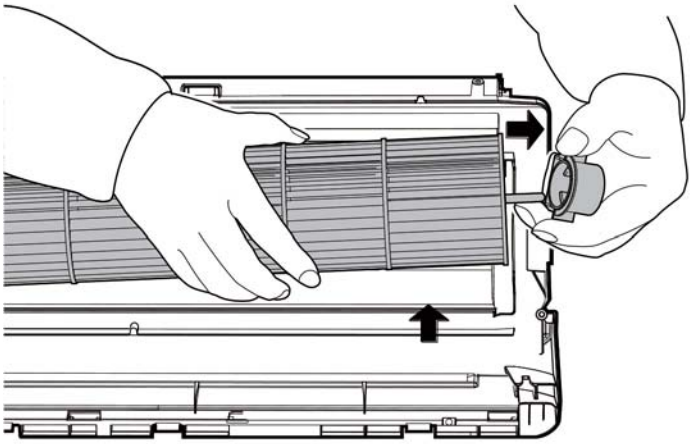 <br>CJ_OP_INV_019 |

# DISASSEMBLY INSTRUCTIONS (CONT)

## Fan Motor and Fan (Cont)

| Procedure | Illustration |
|---|---|
| 3) Remove the fixing screw (see CJ_OP_INV_020).<br>4) Pull out the fan motor and fan assembly from the side. | 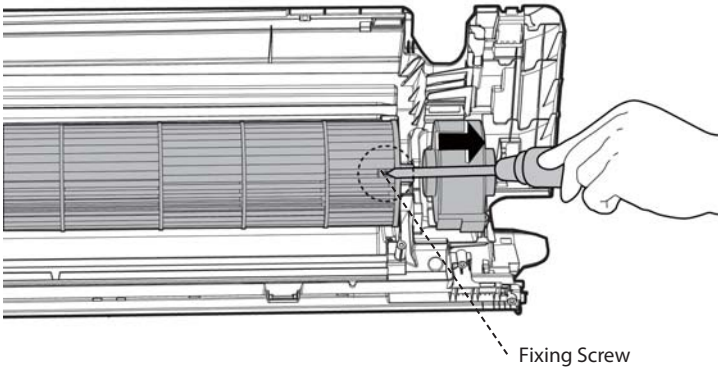 <br>CJ_OP_INV_021 |

## Step Motor

**NOTE**: Remove the front panel and electrical parts (refer to the front panel, electrical parts removal steps) before disassembling step motor.

| Procedure | Illustration |
|---|---|
| 1) Remove the two screws, then remove the stepping motor (see CJ_OP_INV_021). | 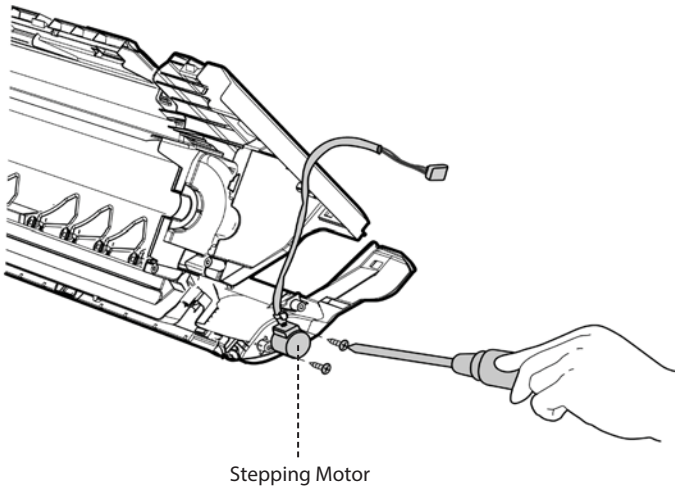 <br>CJ_OP_INV_021 |

# DISASSEMBLY INSTRUCTIONS (CONT)

## Intelligent Eye

**NOTE**: Remove the front panel and electrical parts (refer to the front panel, electrical parts, evaporator and fan motor and fan removal steps) before disassembling the step motor.

| Procedure | Illustration |
|---|---|
| 1) Remove the 1 screw, then remove the intelligent eye. (see CJ_OP_INV_021). | 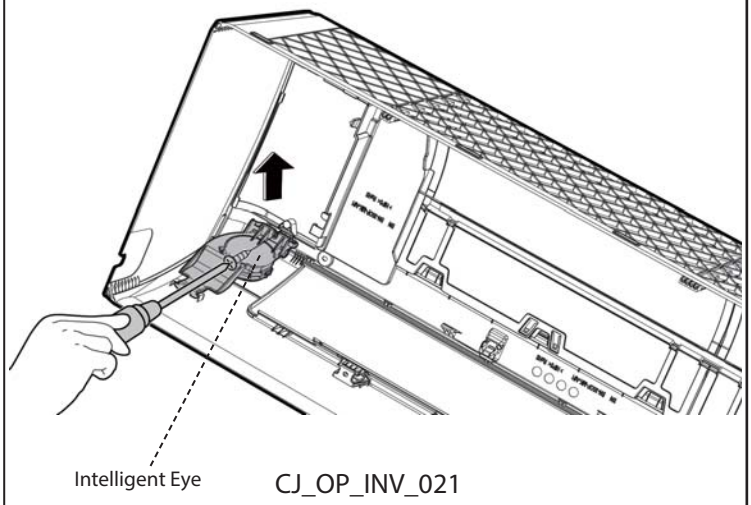 CJ_OP_INV_021 |

# APPENDICES

## Appendix 1

**Table 20—Temperature Sensor Resistance Value Table for T1, T2, T3, T4 (°C−−K)**

| °C | °F | K Ohm | °C | °F | K Ohm | °C | °F | K Ohm | °C | °F | K Ohm |
|---|---|---|---|---|---|---|---|---|---|---|---|
| −20 | −4 | 115.266 | 20 | 68 | 12.6431 | 60 | 140 | 2.35774 | 100 | 212 | 0.62973 |
| −19 | −2 | 108.146 | 21 | 70 | 12.0561 | 61 | 142 | 2.27249 | 101 | 214 | 0.61148 |
| −18 | 0 | 101.517 | 22 | 72 | 11.5 | 62 | 144 | 2.19073 | 102 | 216 | 0.59386 |
| −17 | 1 | 96.3423 | 23 | 73 | 10.9731 | 63 | 145 | 2.11241 | 103 | 217 | 0.57683 |
| −16 | 3 | 89.5865 | 24 | 75 | 10.4736 | 64 | 147 | 2.03732 | 104 | 219 | 0.56038 |
| −15 | 5 | 84.219 | 25 | 77 | 10 | 65 | 149 | 1.96532 | 105 | 221 | 0.54448 |
| −14 | 7 | 79.311 | 26 | 79 | 9.55074 | 66 | 151 | 1.89627 | 106 | 223 | 0.52912 |
| −13 | 9 | 74.536 | 27 | 81 | 9.12445 | 67 | 153 | 1.83003 | 107 | 225 | 0.51426 |
| −12 | 10 | 70.1698 | 28 | 82 | 8.71983 | 68 | 154 | 1.76647 | 108 | 226 | 0.49989 |
| −11 | 12 | 66.0898 | 29 | 84 | 8.33566 | 69 | 156 | 1.70547 | 109 | 228 | 0.486 |
| −10 | 14 | 62.2756 | 30 | 86 | 7.97078 | 70 | 158 | 1.64691 | 110 | 230 | 0.47256 |
| −9 | 16 | 58.7079 | 31 | 88 | 7.62411 | 71 | 160 | 1.59068 | 111 | 232 | 0.45957 |
| −8 | 18 | 56.3694 | 32 | 90 | 7.29464 | 72 | 162 | 1.53668 | 112 | 234 | 0.44699 |
| −7 | 19 | 52.2438 | 33 | 91 | 6.98142 | 73 | 163 | 1.48481 | 113 | 235 | 0.43482 |
| −6 | 21 | 49.3161 | 34 | 93 | 6.68355 | 74 | 165 | 1.43498 | 114 | 237 | 0.42304 |
| −5 | 23 | 46.5725 | 35 | 95 | 6.40021 | 75 | 167 | 1.38703 | 115 | 239 | 0.41164 |
| −4 | 25 | 44 | 36 | 97 | 6.13059 | 76 | 169 | 1.34105 | 116 | 241 | 0.4006 |
| −3 | 27 | 41.5878 | 37 | 99 | 5.87359 | 77 | 171 | 1.29078 | 117 | 243 | 0.38991 |
| −2 | 28 | 39.8239 | 38 | 100 | 5.62961 | 78 | 172 | 1.25423 | 118 | 244 | 0.37956 |
| −1 | 30 | 37.1988 | 39 | 102 | 5.39689 | 79 | 174 | 1.2133 | 119 | 246 | 0.36954 |
| 0 | 32 | 35.2024 | 40 | 104 | 5.17519 | 80 | 176 | 1.17393 | 120 | 248 | 0.35982 |
| 1 | 34 | 33.3269 | 41 | 106 | 4.96392 | 81 | 178 | 1.13604 | 121 | 250 | 0.35042 |
| 2 | 36 | 31.5635 | 42 | 108 | 4.76253 | 82 | 180 | 1.09958 | 122 | 252 | 0.3413 |
| 3 | 37 | 29.9058 | 43 | 109 | 4.5705 | 83 | 181 | 1.06448 | 123 | 253 | 0.33246 |
| 4 | 39 | 28.3459 | 44 | 111 | 4.38736 | 84 | 183 | 1.03069 | 124 | 255 | 0.3239 |
| 5 | 41 | 26.8778 | 45 | 113 | 4.21263 | 85 | 185 | 0.99815 | 125 | 257 | 0.31559 |
| 6 | 43 | 25.4954 | 46 | 115 | 4.04589 | 86 | 187 | 0.96681 | 126 | 259 | 0.30754 |
| 7 | 45 | 24.1932 | 47 | 117 | 3.88673 | 87 | 189 | 0.93662 | 127 | 261 | 0.29974 |
| 8 | 46 | 22.5662 | 48 | 118 | 3.73476 | 88 | 190 | 0.90753 | 128 | 262 | 0.29216 |
| 9 | 48 | 21.8094 | 49 | 120 | 3.58962 | 89 | 192 | 0.8795 | 129 | 264 | 0.28482 |
| 10 | 50 | 20.7184 | 50 | 122 | 3.45097 | 90 | 194 | 0.85248 | 130 | 266 | 0.2777 |
| 11 | 52 | 19.6891 | 51 | 124 | 3.31847 | 91 | 196 | 0.82643 | 131 | 268 | 0.27078 |
| 12 | 54 | 18.7177 | 52 | 126 | 3.19183 | 92 | 198 | 0.80132 | 132 | 270 | 0.26408 |
| 13 | 55 | 17.8005 | 53 | 127 | 3.07075 | 93 | 199 | 0.77709 | 133 | 271 | 0.25757 |
| 14 | 57 | 16.9341 | 54 | 129 | 2.95896 | 94 | 201 | 0.75373 | 134 | 273 | 0.25125 |
| 15 | 59 | 16.1156 | 55 | 131 | 2.84421 | 95 | 203 | 0.73119 | 135 | 275 | 0.24512 |
| 16 | 61 | 15.3418 | 56 | 133 | 2.73823 | 96 | 205 | 0.70944 | 136 | 277 | 0.23916 |
| 17 | 63 | 14.6181 | 57 | 135 | 2.63682 | 97 | 207 | 0.68844 | 137 | 279 | 0.23338 |
| 18 | 64 | 13.918 | 58 | 136 | 2.53973 | 98 | 208 | 0.66818 | 138 | 280 | 0.22776 |
| 19 | 66 | 13.2631 | 59 | 138 | 2.44677 | 99 | 210 | 0.64862 | 139 | 282 | 0.22231 |

# APPENDICES (CONT)

## Appendix 2

**Table 21—Temperature Sensor Resistance Value Table for T1,T2,T3,T4 (°C−−K)**

| °C | °F | K Ohm | °C | °F | K Ohm | °C | °F | K Ohm | °C | °F | K Ohm |
|---|---|---|---|---|---|---|---|---|---|---|---|
| −20 | −4 | 542.7 | 20 | 68 | 68.66 | 60 | 140 | 13.59 | 100 | 212 | 3.702 |
| −19 | −2 | 511.9 | 21 | 70 | 65.62 | 61 | 142 | 13.11 | 101 | 214 | 3.595 |
| −18 | 0 | 483 | 22 | 72 | 62.73 | 62 | 144 | 12.65 | 102 | 216 | 3.492 |
| −17 | 1 | 455.9 | 23 | 73 | 59.98 | 63 | 145 | 12.21 | 103 | 217 | 3.392 |
| −16 | 3 | 430.5 | 24 | 75 | 57.37 | 64 | 147 | 11.79 | 104 | 219 | 3.296 |
| −15 | 5 | 406.7 | 25 | 77 | 54.89 | 65 | 149 | 11.38 | 105 | 221 | 3.203 |
| −14 | 7 | 384.3 | 26 | 79 | 52.53 | 66 | 151 | 10.99 | 106 | 223 | 3.113 |
| −13 | 9 | 363.3 | 27 | 81 | 50.28 | 67 | 153 | 10.61 | 107 | 225 | 3.025 |
| −12 | 10 | 343.6 | 28 | 82 | 48.14 | 68 | 154 | 10.25 | 108 | 226 | 2.941 |
| −11 | 12 | 325.1 | 29 | 84 | 46.11 | 69 | 156 | 9.902 | 109 | 228 | 2.86 |
| −10 | 14 | 307.7 | 30 | 86 | 44.17 | 70 | 158 | 9.569 | 110 | 230 | 2.781 |
| −9 | 16 | 291.3 | 31 | 88 | 42.33 | 71 | 160 | 9.248 | 111 | 232 | 2.704 |
| −8 | 18 | 275.9 | 32 | 90 | 40.57 | 72 | 162 | 8.94 | 112 | 234 | 2.63 |
| −7 | 19 | 261.4 | 33 | 91 | 38.89 | 73 | 163 | 8.643 | 113 | 235 | 2.559 |
| −6 | 21 | 247.8 | 34 | 93 | 37.3 | 74 | 165 | 8.358 | 114 | 237 | 2.489 |
| −5 | 23 | 234.9 | 35 | 95 | 35.78 | 75 | 167 | 8.084 | 115 | 239 | 2.422 |
| −4 | 25 | 222.8 | 36 | 97 | 34.32 | 76 | 169 | 7.82 | 116 | 241 | 2.357 |
| −3 | 27 | 211.4 | 37 | 99 | 32.94 | 77 | 171 | 7.566 | 117 | 243 | 2.294 |
| −2 | 28 | 200.7 | 38 | 100 | 31.62 | 78 | 172 | 7.321 | 118 | 244 | 2.233 |
| −1 | 30 | 190.5 | 39 | 102 | 30.36 | 79 | 174 | 7.086 | 119 | 246 | 2.174 |
| 0 | 32 | 180.9 | 40 | 104 | 29.15 | 80 | 176 | 6.859 | 120 | 248 | 2.117 |
| 1 | 34 | 171.9 | 41 | 106 | 28 | 81 | 178 | 6.641 | 121 | 250 | 2.061 |
| 2 | 36 | 163.3 | 42 | 108 | 26.9 | 82 | 180 | 6.43 | 122 | 252 | 2.007 |
| 3 | 37 | 155.2 | 43 | 109 | 25.86 | 83 | 181 | 6.228 | 123 | 253 | 1.955 |
| 4 | 39 | 147.6 | 44 | 111 | 24.85 | 84 | 183 | 6.033 | 124 | 255 | 1.905 |
| 5 | 41 | 140.4 | 45 | 113 | 23.89 | 85 | 185 | 5.844 | 125 | 257 | 1.856 |
| 6 | 43 | 133.5 | 46 | 115 | 22.89 | 86 | 187 | 5.663 | 126 | 259 | 1.808 |
| 7 | 45 | 127.1 | 47 | 117 | 22.1 | 87 | 189 | 5.488 | 127 | 261 | 1.762 |
| 8 | 46 | 121 | 48 | 118 | 21.26 | 88 | 190 | 5.32 | 128 | 262 | 1.717 |
| 9 | 48 | 115.2 | 49 | 120 | 20.46 | 89 | 192 | 5.157 | 129 | 264 | 1.674 |
| 10 | 50 | 109.8 | 50 | 122 | 19.69 | 90 | 194 | 5 | 130 | 266 | 1.632 |
| 11 | 52 | 104.6 | 51 | 124 | 18.96 | 91 | 196 | 4.849 | | | |
| 12 | 54 | 99.69 | 52 | 126 | 18.26 | 92 | 198 | 4.703 | | | |
| 13 | 55 | 95.05 | 53 | 127 | 17.58 | 93 | 199 | 4.562 | | | |
| 14 | 57 | 90.66 | 54 | 129 | 16.94 | 94 | 201 | 4.426 | | | |
| 15 | 59 | 86.49 | 55 | 131 | 16.32 | 95 | 203 | 4.294 | | | |
| 16 | 61 | 82.54 | 56 | 133 | 15.73 | 96 | 205 | 4.167 | | | |
| 17 | 63 | 78.79 | 57 | 135 | 15.16 | 97 | 207 | 4.045 | | | |
| 18 | 64 | 75.24 | 58 | 136 | 14.62 | 98 | 208 | 3.927 | | | |
| 19 | 66 | 71.86 | 59 | 138 | 14.09 | 99 | 210 | 3.812 | | | |

## Appendix 3

**Table 22—ΔT(° F)=9ΔT(° C)/5**

| ° C | ° F | ° C | ° F | ° C | ° F | ° C | ° F | ° C | ° F |
|---|---|---|---|---|---|---|---|---|---|
| –5 | 23 | 21 | 69.8 | 51 | 123.8 | 82 | 179.6 | 113 | 235.4 |
| –4 | 24.8 | 22 | 71.6 | 52 | 125.6 | 83 | 181.4 | 114 | 237.2 |
| –3 | 26.6 | 23 | 73.4 | 53 | 127.4 | 84 | 183.2 | 115 | 239 |
| –2 | 28.4 | 24 | 75.2 | 54 | 129.2 | 85 | 185 | 116 | 240.8 |
| –1 | 30.2 | 25 | 77 | 55 | 131 | 86 | 186.8 | 117 | 242.6 |
| 0 | 32 | 25.5 | 77.9 | 56 | 132.8 | 87 | 188.6 | 118 | 244.4 |
| 0.5 | 32.9 | 26 | 78.8 | 57 | 134.6 | 88 | 190.4 | 119 | 246.2 |
| 1 | 33.8 | 27 | 80.6 | 58 | 136.4 | 89 | 192.2 | 120 | 248 |
| 1.5 | 34.7 | 28 | 82.4 | 59 | 138.2 | 90 | 194 | 121 | 249.8 |
| 2 | 35.6 | 29 | 84.2 | 60 | 140 | 91 | 195.8 | 122 | 251.6 |
| 2.5 | 36.5 | 30 | 86 | 61 | 141.8 | 92 | 197.6 | 123 | 253.4 |
| 3 | 37.4 | 31 | 87.8 | 62 | 143.6 | 93 | 199.4 | 124 | 255.2 |
| 3.5 | 38.3 | 32 | 89.6 | 63 | 145.4 | 94 | 201.2 | 125 | 257 |
| 4 | 39.2 | 33 | 91.4 | 64 | 147.2 | 95 | 203 | 126 | 258.8 |
| 4.5 | 40.1 | 34 | 93.2 | 65 | 149 | 96 | 204.8 | 127 | 260.6 |
| 5 | 41 | 35 | 95 | 66 | 150.8 | 97 | 206.6 | 128 | 262.4 |
| 6 | 42.8 | 36 | 96.8 | 67 | 152.6 | 98 | 208.4 | 129 | 264.2 |
| 7 | 44.6 | 37 | 98.6 | 68 | 154.4 | 99 | 210.2 | 130 | 266 |
| 8 | 46.4 | 38 | 100.4 | 69 | 156.2 | 100 | 212 | 131 | 267.8 |
| 9 | 48.2 | 39 | 102.2 | 70 | 158 | 101 | 213.8 | 132 | 269.6 |
| 10 | 50 | 40 | 104 | 71 | 159.8 | 102 | 215.6 | 133 | 271.4 |
| 11 | 51.8 | 41 | 105.8 | 72 | 161.6 | 103 | 217.4 | 134 | 273.2 |
| 12 | 53.6 | 42 | 107.6 | 73 | 163.4 | 104 | 219.2 | 135 | 275 |
| 13 | 55.4 | 43 | 109.4 | 74 | 165.2 | 105 | 221 | 136 | 276.8 |
| 14 | 57.2 | 44 | 111.2 | 75 | 167 | 106 | 222.8 | 137 | 278.6 |
| 15 | 59 | 45 | 113 | 76 | 168.8 | 107 | 224.6 | 138 | 280.4 |
| 16 | 60.8 | 46 | 114.8 | 77 | 170.6 | 108 | 226.4 | 139 | 282.2 |
| 17 | 62.6 | 47 | 116.6 | 78 | 172.4 | 109 | 228.2 | 140 | 284 |
| 18 | 64.4 | 48 | 118.4 | 79 | 174.2 | 110 | 230 | 141 | 285.8 |
| 19 | 66.2 | 49 | 120.2 | 80 | 176 | 111 | 231.8 | 142 | 287.6 |
| 20 | 68 | 50 | 122 | 81 | 177.8 | 112 | 233.6 | 143 | 289.4 |

©2017 Bryant Heating & Cooling Systems ● 7310 W. Morris St. ● Indianapolis, IN 46231
Edition Date: 10/17

**Catalog No. SM619PHA–01**

**Manufacturer reserves the right to discontinue, or change at any time, specifications or designs without notice and without incurring obligations.**
Replaces: NEW