40MBCAQ
CASSETTE DUCTLESS SYSTEM
SIZES 24 TO 48

Product Data

A221005

Fig. 1 — Cassette and Remote Controller

NOTE: Images are for illustration purposes only. Actual models may differ slightly.

TABLE OF CONTENTS

	PAGE
INDUSTRY LEADING FEATURES / BENEFITS	1
MODEL NUMBER NOMENCLATURE	3
STANDARD FEATURES AND ACCESSORIES	4
SPECIFICATIONS	5
DIMENSIONS	6
APPLICATION DATA	7
WIRING	8
WIRELESS REMOTE CONTROL	8
AIR FLOW DATA	9
AIR THROW DATA	9
SOUND PRESSURE	9
SOUND PRESSURE TESTING METHOD	9
FAN AND MOTOR SPECIFICATIONS	10
WIRING DIAGRAMS	11
GUIDE SPECIFICATIONS	13

INDUSTRY LEADING FEATURES / BENEFITS

A PERFECT BALANCE BETWEEN BUDGET LIMITS, ENERGY SAVINGS AND COMFORT.

The **40MBCAQ** ductless series systems are a matched combination of an outdoor condensing unit and an indoor fan coil unit connected only by refrigerant tubing and wires.

The in-ceiling cassette fan coils are ideal for retrofit or modernization projects where a false ceiling is available. This selection of fan coils permits inexpensive and creative solutions to design problems such as:

- **Add-ons to current space (an office or family room addition)**
- **Special space requirements**
- **When changes in the load cannot be handled by the existing system**
- **When adding air conditioning to spaces that are heated by hydronic or electric heat and have no ductwork**
- **Historical renovations or any application where preserving the look of the original structure is essential.**

The ideal compliment to your ducted system when it is impractical or prohibitively expensive to use ductwork. These compact indoor fan coil units take up very little space in the room and do not obstruct windows. The fan coils are attractively styled to blend with most room decors.

Advanced system components incorporate innovative technology to provide reliable cooling performance at low sound levels.

LOW SOUND LEVELS

When noise is a concern, the ductless systems are the answer. The indoor units are whisper quiet. There are no compressors indoors, either in the conditioned space or directly over it, and there is none of the noise usually generated by air being forced through ductwork.

SECURE OPERATION

If security is an issue, outdoor and indoor units are connected only by refrigerant piping and wiring to prevent intruders from crawling through ductwork. In addition, since the outdoor units can be installed close to an outside wall, coils are protected from vandals and severe weather.

FAST INSTALLATION

This compact ductless system is simple to install. A mounting bracket is standard with the indoor units and only wire and piping need to be run between the indoor and outdoor units. These units are fast and easy to install ensuring minimal disruption to customers in the home or workplace. This makes ductless systems the equipment of choice, especially in retrofit situations.

SIMPLE SERVICING AND MAINTENANCE

Removing the top panel on outdoor units provides immediate access to the control compartment, providing a service technician access to check unit operation. In addition, the draw−thru design of the outdoor section means that dirt accumulates on the outside surface of the coil. Coils can be cleaned quickly from the inside using a pressure hose and detergent.

On all indoor units, service and maintenance expense is reduced due to easy−to−use cleanable filters. In addition, these cassette systems have extensive self−diagnostics to assist in troubleshooting.

BUILT-IN RELIABILITY

Ductless system indoor and outdoor units are designed to provide years of trouble-free operation. The in-ceiling cassette units include protection against freeze-up and high evaporator temperatures on heat pumps. The condensing units on heat pumps are protected by a three minute time delay before the compressor starts the over-current protection and the high temperature protection.

INDIVIDUAL ROOM COMFORT

Maximum comfort is provided because each space can be controlled individually based on usage pattern. The air sweep feature provided permits optimal room air mixing to eliminate hot and cold spots for occupant comfort. In addition, year-round comfort can be provided with heat pumps.

ECONOMICAL OPERATION

The ductless system design allows individual room heating or cooling when required. There is no need to run large supply-air fans or chilled water pumps to handle a few spaces with unique load patterns. In addition, because air is moved only in the space required, no energy is wasted moving air through ducts.

EASY-TO-USE CONTROLS

The in-ceiling cassette has microprocessor-based controls to provide the ultimate in comfort and efficiency. The user friendly wireless remote control provides the interface between user and the unit.

FACTORY INSTALLED CONDENSATE LIFT PUMP

Customizing these ductless systems to your application is easily accomplished. The factory installed condensate lift pump on the cassette fan coil unit provides installation flexibility.

OPTIONAL WIRED CONTROLLER

AGENCY LISTINGS

All systems are listed with AHRI (Air Conditioning, Heating & Refrigeration Institute), and UL/ETL under UL 60335-2-40.

Manufacturer reserves the right to change, at any time, specifications and designs without notice and without obligations.

MODEL NUMBER NOMENCLATURE

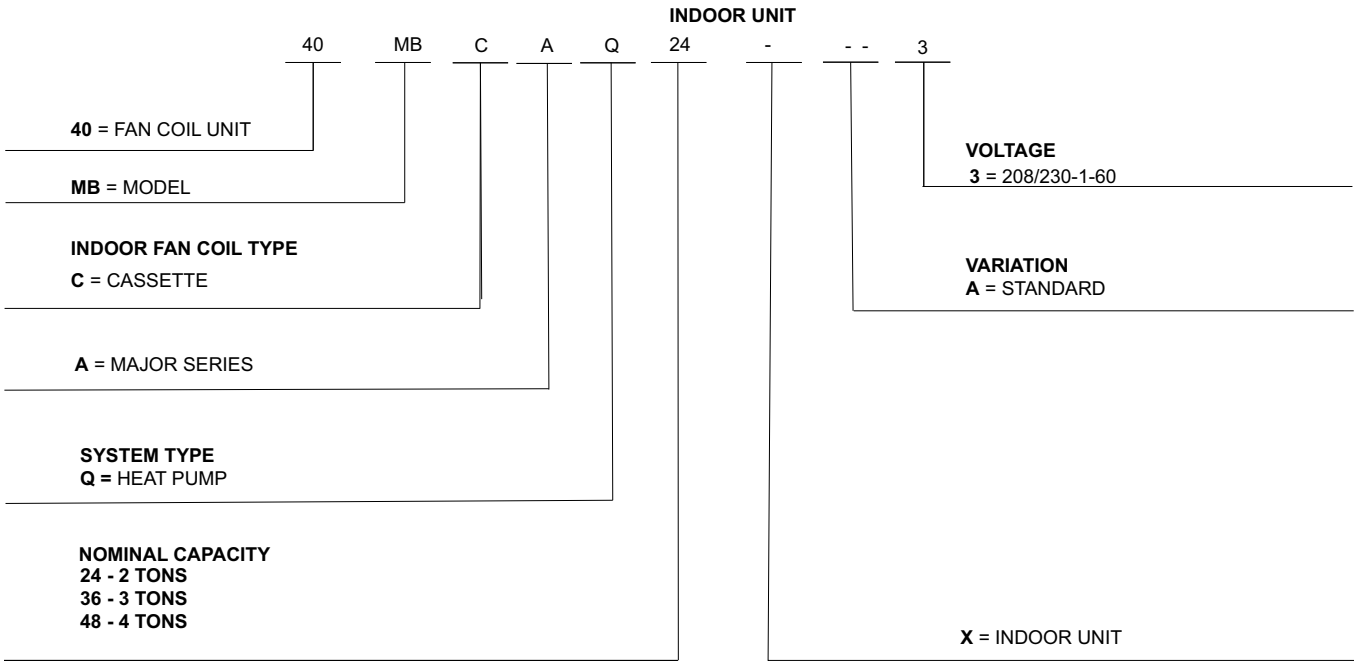

A221006

Use of the AHRI Certified TM Mark indicates a manufacturer's participation in the program For verification of certification for individual products, go to www.ahridirectory.org.

A221007

STANDARD FEATURES AND ACCESSORIES

Ease Of Installation	
Mounting Brackets	S
Low Voltage Controls	S
Comfort Features	
Microprocessor Controls	S
Wired Remote Controller	A
Wireless Remote Controller	S
Automatic Horizontal Air Sweep	S
Wi-Fi Remote Control	A
Air Direction Control	S
Auto Restart Function	S
Cold Blow Protection On Heat Pumps	S
Freeze Protection Mode on Heat Pumps	S
Turbo Mode	S
Silence Mode	S
Auto Changeover on Heat Pumps	S
Follow Me	S
Energy Saving Features	
Sleep Mode	S
Stop/Start Timer	S
46° F Heating Mode (Heating Setback)	S
Safety And Reliability	
Indoor Coil Freeze Protection	S
Indoor Coil High Temp Protection in Heating Mode	S
Anti-corrosive fin coating	S
Ease Of Service And Maintenance	
Cleanable Filters	S
Diagnostics	S
Liquid Line Pressure Taps	S
Application Flexibility	
Condensate Lift Pump	S

Legend
S - Standard
A - Accessory

ACCESSORIES

Accessory No.	Description	For Models
KSACN0101AAA	Wired Remote Control with Timer Function	All Sizes
KSACN0701AAA	Wired Remote Control 7 Day Programmable	All Sizes
40MBCQ02XXX4	Grille/Ceiling Panel 3ft x 3 ft	Sizes 24 - 48
KSAIF0601AAA	Wi-Fi Kit	All Sizes

INDOOR UNIT ACCESSORIES

Grille

To maximize shipping efficiency, the grille for the in-ceiling cassette is set up as an accessory.

NOTE: Grille is required.

SPECIFICATIONS

HEAT PUMP					
SYSTEM	**INDOOR SIZE**		**24K**	**36K**	**48K**
Electrical	Voltage, Phase, Cycle	V/Ph/Hz	208/230-1-60	208/230-1-60	208/230-1-60
	Power Supply		Powered by Outdoor Unit	Powered by Outdoor Unit	Powered by Outdoor Unit
	Running Current, Rated Input	A.	1	1	1.5
Controls	Wireless Remote Controller (°F/°C Convertible)		Standard	Standard	Standard
	Wired Remote Controller (°F/°C Convertible)		Optional	Optional	Optional
	24V Interface for 3rd Party Thermostat Control		Optional	Optional	Optional
Operating Range	Cooling Indoor DB Min - Max	°F(°C)	60.8~90 (16~32)	60.8~90 (16~32)	60.8~90 (16~32)
	Heating Indoor DB Min - Max	°F(°C)	32~86 (0~30)	32~86 (0~30)	32~86 (0~30)
Piping	Pipe Connection Size - Liquid	in (mm)	3/8 (9.52)	3/8 (9.52)	3/8 (9.52)
	Pipe Connection Size - Suction	in (mm)	5/8 (15.9)	5/8 (15.9)	5/8 (15.9)
Indoor Coil	Face Area	Sq. Ft.	3.86	5.79	5.32
	No. Rows		2	3	3
	Fins per inch		20	20	20
	Circuits		4	10	10
Airflow, Sound & Moisture	Number of Fan Speeds (Low/Med/High/Turbo)		4	4	4
	Airflow (Low to Turbo)	CFM	547/635/706/764	753/853/947/1041	935/1059/1171/1288
	Sound Pressure (lowest to highest)	dB(A)	42/44/47/49	46/49/51/53	49/52/54/56
	Air throw Data	ft (m)	14.7 (4.5)	16.4 (5)	16.4 (5)
	Moisture removal	Pint/h (L/h)	5.6 (2.6)	8.5 (4.0)	12.3 (5.8)
	Field Drain Pipe Size O.D.	in (mm)	1 (25.4)	1 (25.4)	1 (25.4)

Manufacturer reserves the right to change, at any time, specifications and designs without notice and without obligations.

DIMENSIONS

SIZE			24K	36K	48K
INDOOR	Body Unit Width	In/ (mm)	32.68 (830)	32.68 (830)	32.68 (830)
	Body Unit Height (C)	In/ (mm)	8.07 (205)	9.65 (245)	11.3 (287)
	Body Unit Depth	In/ (mm)	32.68 (830)	32.68 (830)	32.68 (830)
	Air Intake Inlet: Width (A)	In/ (mm)	6.5 (165)	6.5 (165)	6.5 (165)
	Air Intake Inlet: Height (B)	In/ (mm)	3.15 (80)	3.94 (100)	3.94 (100)
	Relative Drain Hole Position (D)	In/ (mm)	1.97 (50)	2.36 (60)	2.36 (60)
	Body Net Weight	lbs (kg)	47.18 (21.4)	59.97 (27.2)	64.59 (29.3)
	PACKAGING				
	Height	In/ (mm)	9.84 (250)	11.42 (290)	12.99 (330)
	Width	In/ (mm)	35.83 (910)	35.83 (910)	35.83 (910)
	Depth	In/ (mm)	35.83 (910)	35.83 (910)	35.83 (910)
	Thickness	In/ (mm)	0.298 (7.5)	0.298 (7.5)	0.298 (7.5)

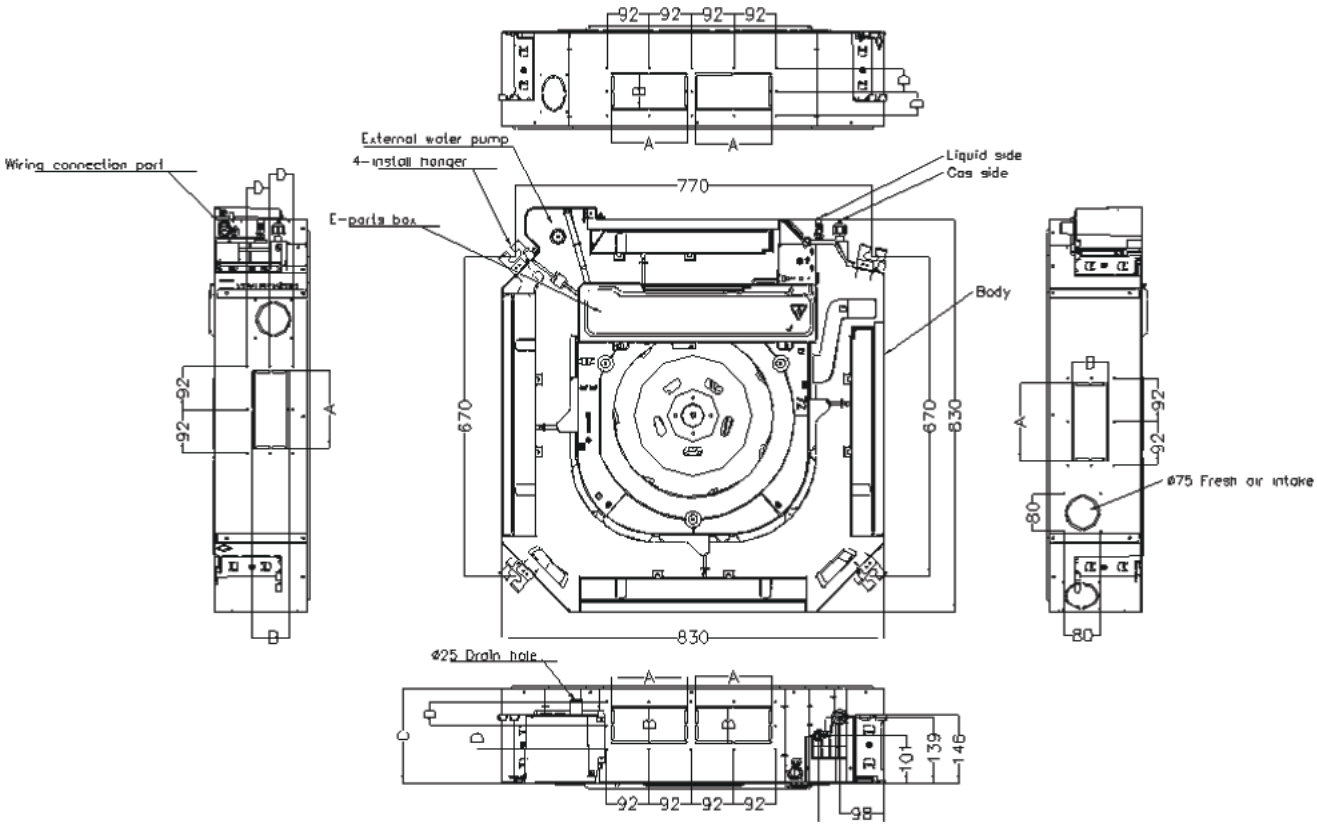

A221008

Fig. 2 —Dimensions

NOTE: Refer to the unit's installation instructions for further details.

* Performance may vary based on the outdoor unit it is matched to. See the compatible outdoor units pages for performance data.

APPLICATION DATA

UNIT SELECTION

Select equipment to either match or handle slightly less than the anticipated peak load. This provides better humidity control, fewer unit cycles, and less part-load operation.

For units used in spaces with high sensible loads, base equipment selection on the unit sensible load, not on the total anticipated load.

Adjust for the anticipated room wet bulb temperature to avoid undersizing the equipment.

UNIT MOUNTING (INDOOR)

Refer to the unit's installation instructions for further details.

UNIT MOUNTING (OUTDOOR)

Refer to the unit's installation instructions for further details.

Do not install the indoor or outdoor units in a location with special environmental conditions. For those applications, contact your ductless representative.

SUPPORT

Adequate support must be provided to support the weight of all fan coils. For fan coil weights, and the base unit dimensional drawings for the location of the mounting brackets, refer to the see "SPECIFICATIONS" on page 5.

SYSTEM OPERATING CONDITIONS

OPERATING RANGE MIN/ MAX F°/C°		
	Cooling	Heating
Indoor DB	61/90/(16/32)	32/86(0/30)
Indoor WB	57/68 (14/20)	

DRAIN CONNECTIONS

Install drains to meet the local sanitation codes. The in-ceiling cassette is supplied with a condensate lift pump that is capable of lifting the water 29.5in (750mm) above the top of the unit. A downward sloped condensate drain pipe can be used to dispose of water.

REFRIGERANT LINES

General refrigerant line sizing:

1. The outdoor units are shipped with a full charge of R410A refrigerant.
2. Refrigerant lines should not be buried in the ground. If it is necessary to bury the lines, not more than 36in (914mm) should be buried. Provide a minimum 6in (152mm) vertical rise to the service valves to prevent refrigerant migration.
3. Both lines must be insulated. Use a minimum of 1/2in (12.7mm) thick insulation. Closed-cell insulation is recommended in all long-line applications.
4. Special consideration should be given to isolating interconnecting tubing from the building structure. Isolate the tubing so that vibration or noise is not transmitted into the structure.

Manufacturer reserves the right to change, at any time, specifications and designs without notice and without obligations.

WIRING

All wires must be sized per NEC (National Electrical Code) or CEC (Canadian Electrical Code) and local codes. Use Electrical Data table MCA (minimum circuit amps) and MOCP (maximum over current protection) to correctly size the wires and the disconnect fuse or breakers respectively.

Recommended Connection Method for Power and Communication Wiring:

The main power is supplied to the outdoor unit. The field supplied 14/3 stranded wire with ground with a 600 volt insulation rating, power/communication wiring from the outdoor unit to indoor unit consists of four (4) wires and provides the power for the indoor unit. Two wires are line voltage AC power, one is communication wiring (S) and the other is a ground wire. Wiring between indoor and outdoor unit is polarity sensitive. The use of BX wire is NOT recommended.

If installed in a high Electromagnetic field (EMF) area and communication issues exists, a 14/2 stranded shielded wire can be used to replace L2 and (S) between outdoor unit and indoor unit landing the shield onto ground in the outdoor unit only.

CAUTION

EQUIPMENT DAMAGE HAZARD

Failure to follow this caution may result in equipment damage or improper operation.

CAUTION

EQUIPMENT DAMAGE HAZARD

Failure to follow this caution may result in equipment damage or improper operation.

Be sure to comply with local codes while running wire from the indoor unit to the outdoor unit.

Every wire must be connected firmly. Loose wiring may cause the terminal to overheat or result in unit malfunction. A fire hazard may also exist. Ensure all wiring is tightly connected.

No wire should touch the refrigerant tubing, compressor or any moving parts.

Disconnecting means must be provided and shall be located within sight and readily accessible from the air conditioner.

CONTROL SYSTEM

The indoor unit is equipped with a microprocessor control to perform two functions:

1. Provide safety for the system
2. Control the system and provide optimum levels of comfort and efficiency.

The main microprocessor is located on the control board of the fan coil unit (outdoor units have a microprocessor too) with thermistors located in the fan coil air inlet and on the indoor coil. Heat pump units have a thermistor on the outdoor coil. These thermistors monitor the system operation to maintain the unit within acceptable parameters and control the operating mode.

WIRELESS REMOTE CONTROL

A221009

Fig. 3 —Remote Controller

1. A wireless remote control is supplied for system operation of all in-ceiling cassette units.
2. Each battery operated wireless (infrared) remote control may be used to control more than one unit.

WIRED REMOTE CONTROL (OPTIONAL)

Part Numbers (P/N)

- **KSACN0101AAA (Timer Function)**
- **KSACN0701AAA (7 Day Programmable)**

1. Optional wired remote controller used for system operation of all in-ceiling cassette units.

NOTE: Extension wire available through RCD (KSACN0101AAA) Part Number: 17401204001601

2. Kit includes a wired remote controller and a connecting cable.
3. Connect the wire terminal between the remote controller and the indoor unit.
4. Display in °F or °C and temperature increments every 1°F or every 1°C.

A221010

Fig. 4 —KSACN0101AAA (Timer Function)

A221011

Fig. 5 —KSACN0701AAA (7 Day Programmable)

AIR FLOW DATA

SYSTEM SIZE		24K	36K	48K
		(208/230V)	(208/230V)	(208/230V)
Indoor (CFM)	Turbo	764.71	1041.18	1288.24
	High	705.88	947.06	1170.59
	Medium	635.29	852.94	1058.82
	Low	547.06	752.94	935.29

AIR THROW DATA

CASSETTE UNIT CAPACITY	MAX. APPROXIMATE AIR THROW FT. (M)	APPROXIMATE AIR THROW RANGE FT.(M)
24K	14.7(4.5)	1.64~14.7(0.5~4.5)
36K	16.4(5)	1.64~16.4(0.5~5)
48K	16.4(5)	1.64~16.4(0.5~5)

SOUND PRESSURE

CASSETTE INDOOR		24K (208/230V)	36K (208/230V)	48K (208/230V)
Cooling Operation Indoor	Dba at (High / Med /Low CFM)	49.1/46.9/44.4/41.9	53.1/51.0/48.6/45.6	56.1/53.9/51.8/49.2
Heating Operation Indoor	Dba at (High / Med /Low CFM)	48.0/46.4/43.7/41.1	52.6/50.3/47.7/45.0	55.0/52.5/50.1/47.3

SOUND PRESSURE TESTING METHOD

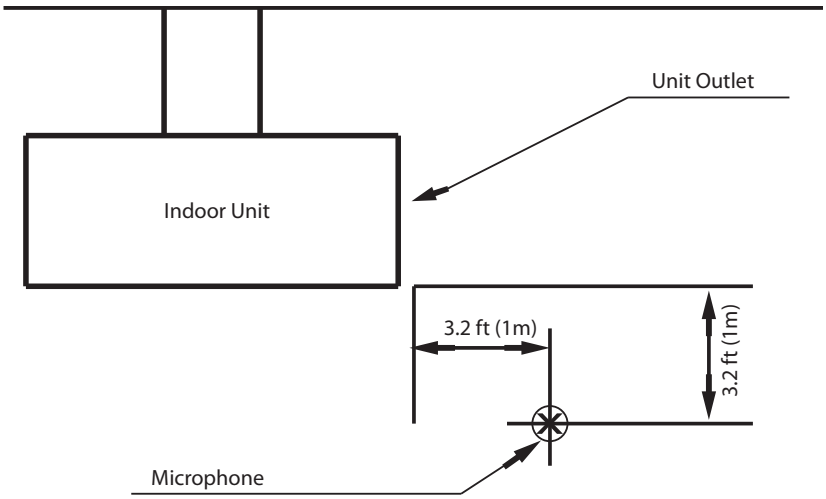

Fig. 6 — Sound Pressure Testing Method

FAN AND MOTOR SPECIFICATIONS

			(208/230 V)	(208/230 V)	(208/230 V)
CASSETTE FAN	Material		Acrylontrile Styrene +30%GF	Acrylontrile Styrene +30%GF	Acrylontrile Styrene +30%GF
	Type		LX-476*125*12-7	LX-476*148*12-7N	LX-476*170*12-7N
	Diameter	In (mm)	18.74(476)	18.74(476)	18.74(476)
	Height	In (mm)	4.92(125)	5.83(148)	6.69(170)
CASSETTE FAN MOTOR	Model		ZKFN-45-8-1	ZKFN-125-8-1	ZKFN-125-8-1
	Volts	V	310		
	Phase		3		
	FLA		1	1	1.5
	Type		DC		
	Insulation class		B (Welling)/ E(Tongda)		
	Safe class		IP20		
	Input	W	199(Welling)/200(Tongda)		
	Output	W	45	125	125
	Range of current	Amps	1.732±10%(Welling)/1.814±10% (Tongda)		
	Rated current	Amps	1.732(Welling)/1.814(Tongda)		
	Capacitor	μF	NA		
	Rated HP	HP	0.06	0.168	0.168
	Speed	rev/min	680/624/568/512/400	760/696/632/568/440	800/730/660/590/456
	Rated RPM	rev/min	700	850	850
	Max. input	W	240(Welling)/248(Tongda)		

Manufacturer reserves the right to change, at any time, specifications and designs without notice and without obligations.

WIRING DIAGRAMS

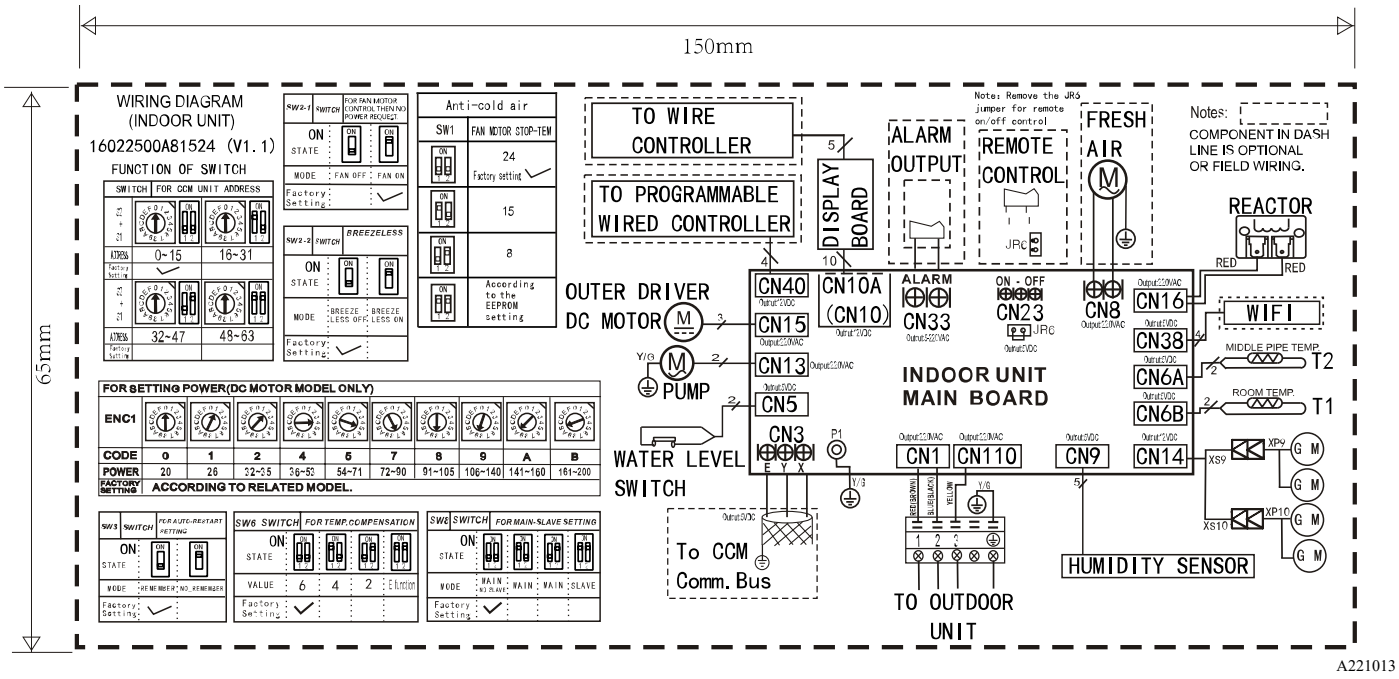

Fig. 7 —Wiring Diagram (Size 24K)

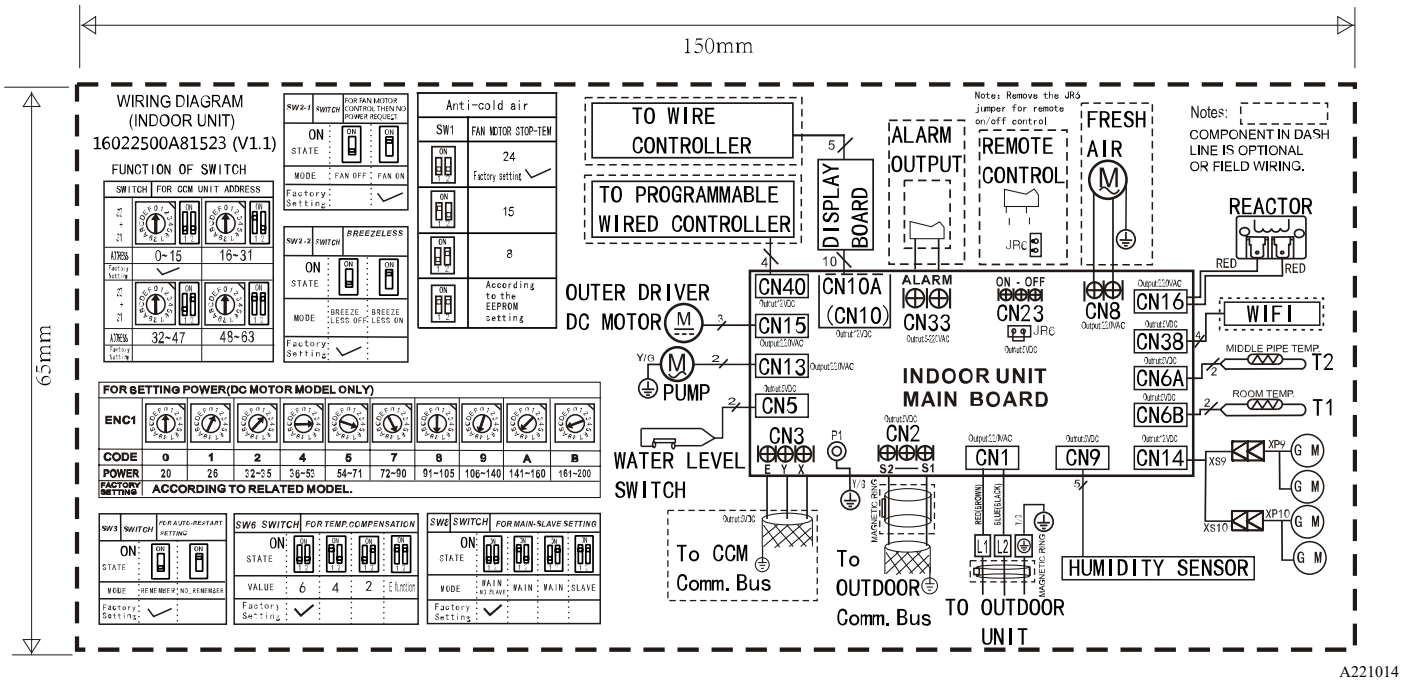

Fig. 8 —(Sizes 36K-48K)

WIRING DIAGRAMS (CONT)

CODE	PART NAME
CN1	Input: 230VAC High voltage Connection of the terminal
CN3	Output: 0-5VDC Connection of the CCM
P1	Output: 0V Connection of the earth
CN5	Output: 1-5VDC Connection of the Water level switch
CN6	Output: 5VDC Connection of the Room and Pipe temperature
CN10A	Output: 12VDC Connection of the Display board
CN13	Output: 220VAC High voltage Connection of the Pump
CN14	Output: 12VDC Connection of the Swing motor
CN15	Output: 320VDC High voltage Connection of the DC Fan
CN16	Output: 320VDC High voltage Connection of the Reactor
CN23	Output: 1-12VDC Connection of the Remote switch
CN33	Output: 0V Connection of the Alarm
CN40	Output: 12VDC Connection of the Wire controller
CN110	Output: 24VDC between Pin2 of CN1 connection of the S signal

Manufacturer reserves the right to change, at any time, specifications and designs without notice and without obligations.

GUIDE SPECIFICATIONS

INDOOR IN-CEILING CASSETTE DUCTLESS UNITS

Size Range: 2 to 4 Ton Nominal Cooling and Heating Capacity

Model Number: 40MBCAQ

Part 1 - GENERAL

1.01 System Description

Indoor, in-ceiling cassette, direct-expansion fan coils are matched with a heat pump outdoor unit.

1.02 Agency Listings

Units are rated per AHRI Standards 210/240 and listed in the AHRI directory as a matched system.

1.03 Delivery, Storage, And Handling

Units are stored and handled per the unit manufacturer's recommendations.

1.04 Warranty (For Inclusion By Specifying Engineer)

Part 2 - PRODUCTS

2.01 Equipment

A. General:

Indoor, direct-expansion, ceiling-mounted fan coil. Unit is complete with a cooling/heating coil, fan, fan motor, piping connectors, electrical controls, microprocessor control system, and an integral temperature sensor.

B. **Unit Cabinet:**

Cabinet is constructed of zinc-coated steel. Fully insulated discharge and inlet grilles are attractively styled, high-impact polystyrene. Grille has hinges and can be opened to obtain access to the cleanable filters, indoor fan motor and control box.

C. **Fans**:

1. The fan is a centrifugal direct-drive blower type with an air intake in the center of the unit and a discharge at the perimeter. An automatic, motor-driven vertical air sweep is provided standard. Automatic motor-driven louvers are provided standard and are adjustable for a 2, 3 or 4-way discharge.
2. The air sweep operation is user selectable.

D. **Coil**:

The coil is a copper tube with aluminum fins and galvanized steel tube sheets. Fins are bonded to the tubes by mechanical expansion and specially hydrophilic pre-coated for enhanced wet-ability. A drip pan under the coil has a factory installed condensate lift pump and a drain connection for a hose attachment to remove condensate.

E. **Motors**:

Motors are open drip−proof, with a permanently lubricated ball bearing. The fan motors is 7−speed.

F. **Controls**:

Controls consist of a microprocessor-based control system which controls the space temperature, determines the optimum fan speed, and runs self diagnostics. The temperature control range is 61°F to 90°F (16°C to 32°C) in increments of 1°F or 1°C, and has a 46°F Heating Mode (Heating Setback). The wireless remote controller, has the ability to act as the temperature sensing location for room comfort.

The unit has the following functions as a minimum:

1. An automatic restart after a power failure at the same operating conditions as at the failure.
2. A timer function to provide a minimum 24−hour timer cycle for system Auto Start/Stop.
3. Temperature−sensing controls sense return air temperature.
4. Indoor coil freeze protection.
5. Wireless infrared remote control to enter set points and operating conditions.
6. Automatic air sweep control to provide on or off activation of air sweep louvers.
7. Dehumidification mode, which provides increased latent removal capability by modulating system operation and set point temperature.
8. Fan−only operation to provide room air circulation when no cooling is required.
9. Diagnostics provide continuous checks of unit operation and warn of possible malfunctions. Error messages appear on the unit.
10. The fan speed control is user-selectable: high, medium, low, or microprocessor controlled automatic operation during all operating modes.
11. Automatic heating−to−cooling changeover in the heat pump mode. Control includes deadband to prevent rapid mode cycling between heating and cooling.
12. Indoor coil high temperature protection detects excessive indoor discharge temperature when the unit is in the heat pump mode.

G. Filters:

Unit has a filter track located at the top of the unit with factory-supplied cleanable filters for easy cleaning.

H. Electrical Requirements:

The indoor fan motor operates on 208-230V on model sizes 24-48, as specified. Power is supplied from the outdoor unit.

I. Operating Characteristics:

The system has a minimum SEER (Seasonal Energy Efficiency Ratio) and HSPF at AHRI conditions, as listed on the specifications table.

J. Refrigerant Lines:

All units should have refrigerant lines that can be oriented to connect from the left, right or back of unit. Both refrigerant lines must be insulated.

Manufacturer reserves the right to change, at any time, specifications and designs without notice and without obligations.

© 2022 Carrier. All rights reserved.

Manufacturer reserves the right to change, at any time, specifications and designs without notice and without obligations.