PG92MSAA

Up to 92.1% AFUE, Single-Stage, Multi 18-Speed ECM, Condensing Gas Furnace

Product Data

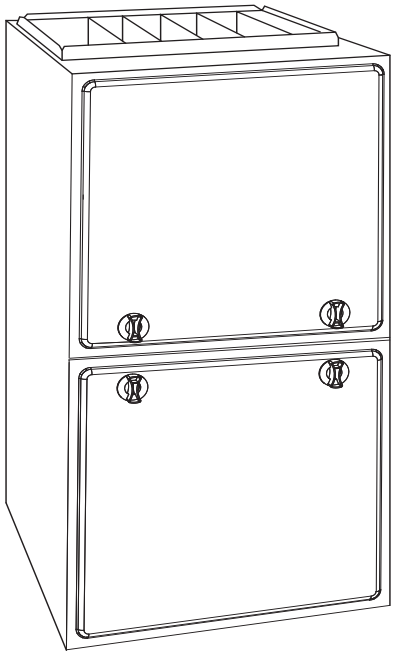

Representative drawing only. Some product models may vary.

The PG92MSAA Multipoise 92 Condensing Gas Furnace features single-stage gas valve and ECM blower motor. This furnace provides electrical efficiency with a fixed-speeds, constant torque (MCT) ECM blower motor. With an Annual Fuel Utilization Efficiency (AFUE) of 92.1% AFUE, the single-stage gas furnace provides added savings over standard, non-condensing gas furnaces. Improved serviceability with the 3 digit status display and NFC enabled board allowing setup via the service tech app. This Gas Furnace features 4-way multipoise installation flexibility, and is available in eight model sizes. The PG92MSAA can be vented for direct vent/two-pipe, ventilated combustion air, or single-pipe applications. All sizes are design certified in Canada. All sizes are design certified for use in Manufactured Housing (Mobile Home) applications when used with factory-approved MH accessory kit.

⚠ WARNING

CARBON MONOXIDE POISONING AND FIRE HAZARD

Failure to follow this warning could result in personal injury, death, and/or property damage.

This furnace is not designed for use in recreation vehicles or outdoors. This furnace is designed for use in manufactured (Mobile) homes when an optional Mobile Home accessory kit is installed.

Failure to follow this warning could result in personal injury, death, and/or property damage.

PERFORMANCE

- Multi 18-speed, constant torque (MCT) ECM blower motor for electrically efficient operation all year long in heating, cooling and continuous fan operation.
- Single-speed inducer motor, and single-stage gas valve.
- Silicon Nitride Robust Hot Surface Igniter.
- Adjustable blower speed for heating and cooling.
- Enhanced diagnostics with easy to read 3 digit display for faults and status
- Aluminized-steel primary heat exchanger.
- Stainless-steel condensing secondary heat exchanger.

INSTALLATION FLEXIBILITY

- 4-way multipoise design for upflow, downflow or horizontal installation, with unique vent elbow for 12 different venting options, including optional venting through-the-cabinet downflow venting capability.
- On-board NFC antenna makes setup a tap away when using the service technician app
- Factory-configured ready for upflow applications.
- Ideal height 35" (889 mm) cabinet: short enough for taller coils, but still allows enough room for service.
- Direct-vent/sealed combustion, single-pipe venting or ventilated combustion air.

APPLICATIONS

- Approved for Twinning applications with accessory kit (42060B, 48080B, 60080C, 60100C, 60120D models, only).
- Approved for Manufactured Housing/Mobile Home applications with MH accessory kit.
- Convertible to propane with gas conversion accessory kit.

CERTIFICATIONS

- All sizes meet ENERGY STAR® South regional standards.
- Cabinet air leakage less than 2.0% at 1.0 in. w.c. and cabinet air leakage less than 1.4% at 0.5 in. w.c. when tested in accordance with ASHRAE standard 193.
- All sizes can be installed in California air quality management districts with a 40 ng/J NOx emissions limit.

LIMITED WARRANTY*

- 20 year heat exchanger limited warranty
- 5 year parts limited warranty
  - With timely registration, an additional 5 year parts limited warranty

See Warranty certificate for complete details and restrictions.

*For residential applications only. See warranty certificate for complete details and restrictions, including warranty coverage for other applications.

ENERGY STAR · DESIGN CERTIFIED · CERTIFIED · AHRI CERTIFIED · FACTORY AUTHORIZED PARTS

DIMENSIONAL DATA

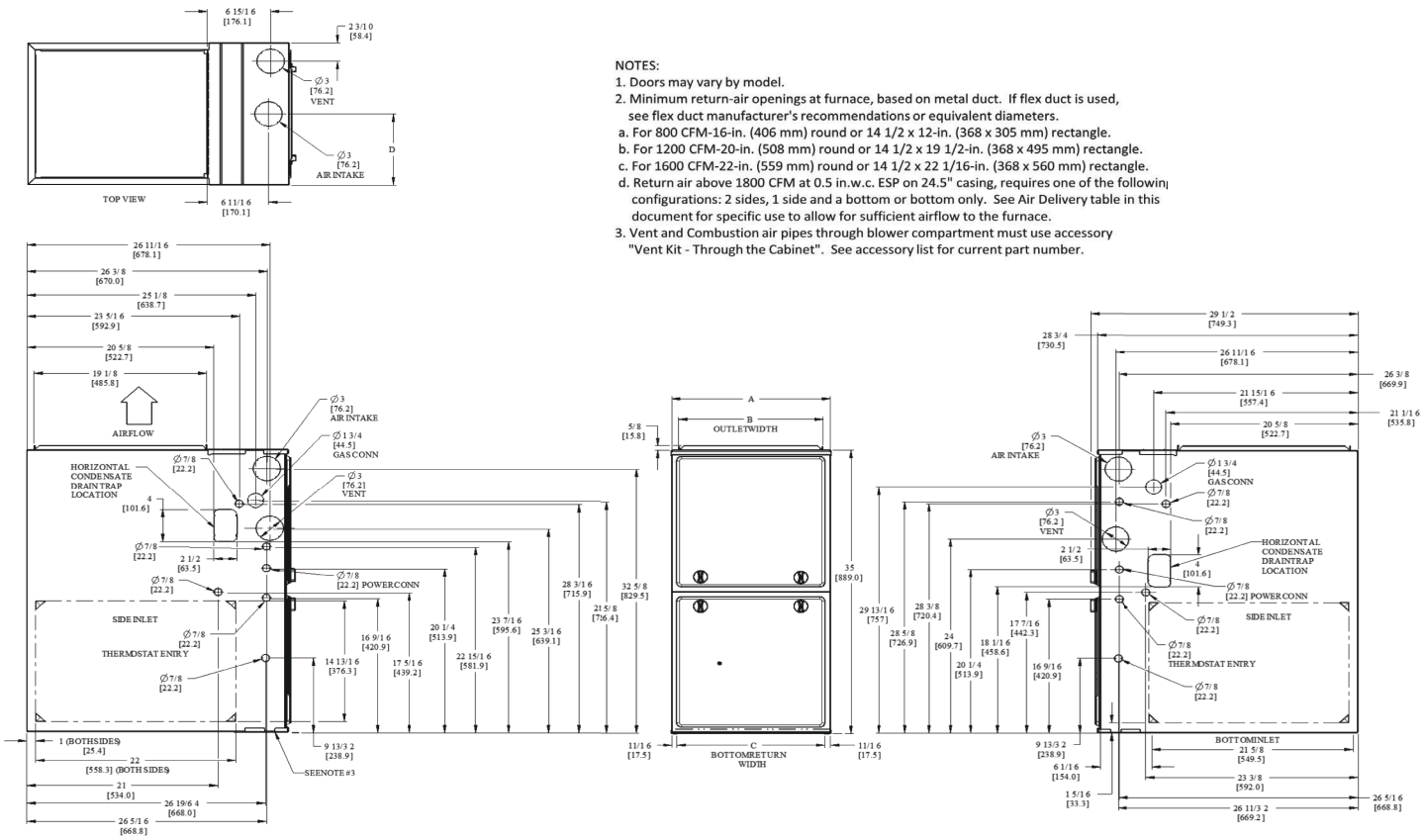

NOTES:
1. Doors may vary by model.
2. Minimum return-air openings at furnace, based on metal duct. If flex duct is used, see flex duct manufacturer's recommendations or equivalent diameters.
   a. For 800 CFM-16-in. (406 mm) round or 14 1/2 x 12-in. (368 x 305 mm) rectangle.
   b. For 1200 CFM-20-in. (508 mm) round or 14 1/2 x 19 1/2-in. (368 x 495 mm) rectangle.
   c. For 1600 CFM-22-in. (559 mm) round or 14 1/2 x 22 1/16-in. (368 x 560 mm) rectangle.
   d. Return air above 1800 CFM at 0.5 in.w.c. ESP on 24.5" casing, requires one of the following configurations: 2 sides, 1 side and a bottom or bottom only. See Air Delivery table in this document for specific use to allow for sufficient airflow to the furnace.
3. Vent and Combustion air pipes through blower compartment must use accessory "Vent Kit - Through the Cabinet". See accessory list for current part number.

Dimensions

Unit Size	A	B	C	D	SHIP WT. LB (KG)
	CABINET WIDTH	OUTLET WIDTH	BOTTOM INLET WIDTH	AIR INTAKE	
36040A	14-3/16 (361)	12-1/2 (319)	12-9/16 (322)	7-1/8 (181)	122 (55)
36040B	17-1/2 (445)	15-7/8 (403)	16 (406)	8-3/4 (222)	123 (56)
36060A	14-3/16 (361)	12-1/2 (319)	12-9/16 (322)	7-1/8 (181)	128 (58)
42060B	17-1/2 (445)	15-7/8 (403)	16 (406)	8-3/4 (222)	136 (62)
48080B	17-1/2 (445)	15-7/8 (403)	16 (406)	8-3/4 (222)	144 (65)
60080C	21 (533)	19-3/8 (492)	19-1/2 (495)	10-1/2 (267)	153 (69)
60100C	21 (533)	19-3/8 (492)	19-1/2 (495)	10-1/2 (267)	160 (73)
60120D	24-1/2 (622)	22-7/8 (581)	23 (584)	12-1/4 (311)	180 (82)

Manufacturer reserves the right to change, at any time, specifications and designs without notice and without obligations.

MODEL NUMBER NOMENCLATURE

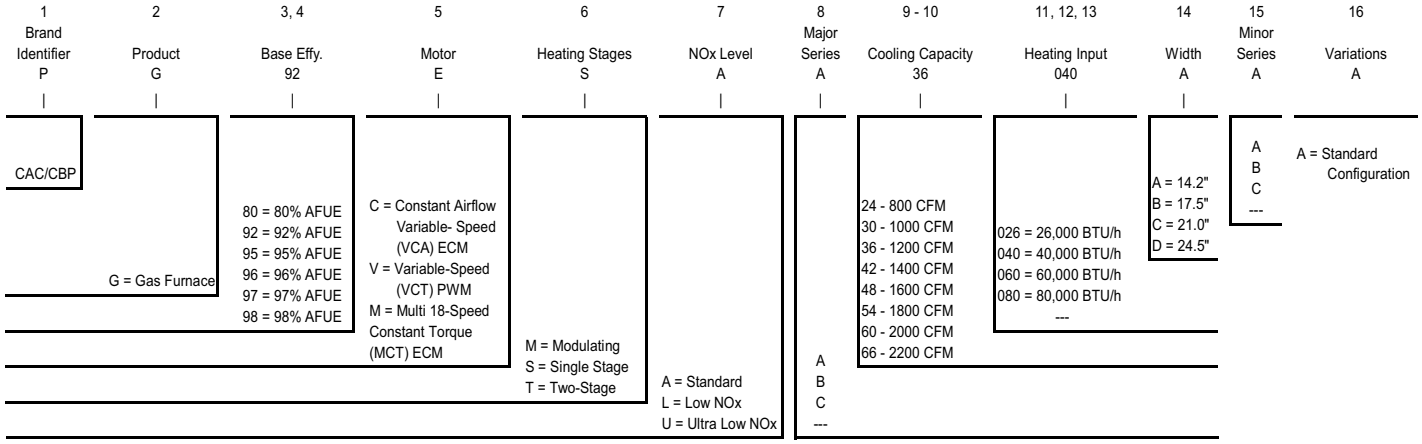

A220583

FURNACE COMPONENTS

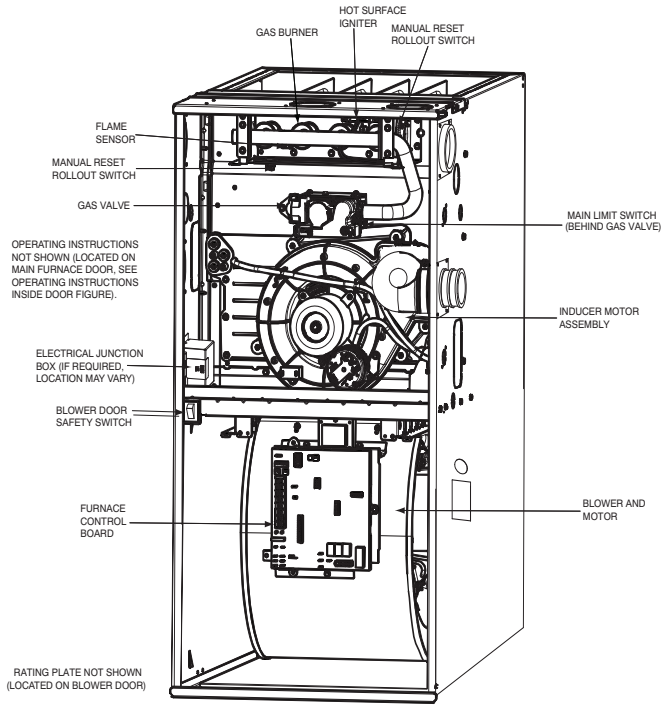

A190145

For California Residents:

If installed with a manufactured (mobile) home conversion kit in SCAQMD: This furnace does not meet the SCAQMD Rule 1111 14 ng/J NOx emission limit, and thus is subject to a mitigation fee of up to $450. This furnace is not eligible for the Clean Air Furnace Rebate Program: www.CleanAirFurnaceRebate.com

MINIMUM CLEARANCES TO COMBUSTIBLE MATERIALS

POSITION	CLEARANCE
Rear	0 (0 mm)
Front (Combustion air openings in furnace and in structure)	1 in. (25 mm)
Required for service*	24 in. (610 mm)†
All Sides of Supply Plenum*	1 in. (25 mm)
Sides	0 (0 mm)
Vent	0 (0 mm)
Top of Furnace	1 in. (25 mm)

*. Consult your local building codes
†. Recommended

The furnace should be sized to provide 100 percent of the design heating load requirement plus any margin that occurs because of furnace model size capacity increments. None of the furnace model sizes can be used if the heating load is 20,000 BTU or lower. Use Air Conditioning Contractors of America (Manual J and S); American Society of Heating, Refrigerating, and Air-Conditioning Engineers; or other approved engineering method to calculate heating load estimates and select the furnace. Excessive oversizing of the furnace may cause the furnace and/or vent to fail prematurely, customer discomfort and/or vent freezing.

Failure to follow these guidelines is considered faulty installation and/or misapplication of the furnace; and resulting failure, damage, or repairs may impact warranty coverage.

SPECIFICATIONS

UNIT SIZE		30040A	36040B	36060A	42060B	48080B	60080C	60100C	60120D
HEATING AND CAPACITY AND EFFICIENCY									
Input BTUh*		40,000	40,000	60,000	60,000	80,000	80,000	100,000	120,000
Output Capacity (BTUh)†)		37,000	37,000	56,000	56,000	75,000	75,000	93,000	112,000
Certified Temperature Rise Range - °F (°C)		35-65 (19-36)	35-65 (19-36)	35-65 (19-36)	40-70 (22-39)	40-70 (22-39)	35-65 (19-36)	40-70 (22-39)	45-75 (25-42)
AFUE		92.1%							
AIRFLOW CAPACITY AND BLOWER DATA									
Rated Certified External Static Pressure	Heating	0.10	0.10	0.12	0.12	0.15	0.15	0.20	0.20
	Cooling	0.50	0.50	0.50	0.50	0.50	0.50	0.50	0.50
Airflow CFM @ Rated ESP (CFM)‡	Heating	730	760	1090	935	1320	1390	1620	1830
	Cooling	195-1090	140-1100	320-1285	200-1340	270-1790	275-1890	295-1870	355-1930
Direct Drive Motor HP		1/2	1/2	1/2	1/2	3/4	3/4	3/4	3/4
Motor Full Load Amps		6.7	6.7	6.7	6.7	8.8	8.8	8.8	8.8
Heating Blower Control (Htg OFF-Delay)		Adjustable: 90, 120 (factory-set), 150, 180 seconds							
Cooling Blower Control (Clg OFF-Delay)		Adjustable: 90 (factory-set), 5, 30 seconds							
Blower Wheel Diameter x Width - In. (mm)		11x7 (279x178)	11x8 (279x203)	11x7 (279x178)	11x8 (279x203)	11x8 (279x203)	11x10 (279x254	11x10 (279x254	11x11 (279x279
Air Filtration System		Field Supplied Filter							
Filter used for Certified Watt Data		325531-40**							
ELECTRICAL DATA									
Unit Volts-Hertz-Phase		115-60-1							
Operating Voltage Range	Min-Max	104-127							
Maximum Unit Amps		7.4	7.4	7.5	7.5	11.0	11.0	11.1	11.1
Unit Ampacity		10.2	10.2	10.3	10.3	14.7	14.7	14.8	14.8
Maximum Wire Length (Measure 1 way in Ft/M)		36/11.1	36/11.1	36/11.0	36/11.0	25/7.7	25/7.7	25/7.6	25/7.6
Minimum Wire Size	AWG	14	14	14	14	14	14	14	14
Max. Fuse/Ckt Bkr Size (Time-Delay Type Recommended)	Amps	15	15	15	15	15	15	15	15
Transformer Capacity (24 VAC output)		40VA							
External Control Power Available	Heating	12VA							
	Cooling	35VA							
GAS CONTROLS									
Burners		2	2	3	3	4	4	5	6
Gas Connection Size		1/2 in. NPT							
Gas Valve (Redundant)	Mfr	White Rodgers™							
Min. inlet pressure	(in.w.c.)	4.5 (Natural Gas)							
Max. inlet pressure	(in.w.c.)	13.6 (Natural Gas)							
Ignition Device		Silicon Nitride							
Factory installed orifice		Size 44							
CONNECTIONS									
Communication System		None							
Thermostat Connections		G, C, W, Y, R							
Accessory Connections		EAC-1 (115 VAC); HUM (24 VAC); 1-STG AC (via Y)							

*. Gas input ratings are certified for elevations to 2000 ft. (610 M). In USA, For elevations above 2000 ft (610 M), reduce ratings 4 percent for each 1000 ft (305 M) above sea level. Refer to National Fuel Gas Code NFPA 54/ANSI Z223.1 Table F.4 or furnace installation instructions.

†. Capacity in accordance with U.S. Government DOE test procedures.

‡. Airflow shown is for bottom only return-air supply for the as-shipped speed tap. For air delivery above 1800 CFM, see Air Delivery table for other options. A filter is required for each return-air supply. An airflow reduction of up to 7 percent may occur when using the factory-specified 4-5/16-in. (110 mm) wide, high efficiency media filter.

**. See Accessory List for part numbers available.

Manufacturer reserves the right to change, at any time, specifications and designs without notice and without obligations.

AIR DELIVERY - CFM

Air Delivery - CFM (with filter)

Unit Size	Airflow Setting	Default Setting	External Static Pressure (in. w.c.)									
			0.1	0.2	0.3	0.4	0.5	0.6	0.7	0.8	0.9	1
36040A	1	Cont. Fan	435	370	310	255	195	120	-	-	-	-
	2		480	420	365	310	260	200	135	-	-	-
	3		525	470	415	365	315	265	210	145	-	-
	4		550	500	445	395	350	305	255	200	135	-
	5		615	570	520	470	425	385	345	300	245	195
	6		665	620	575	525	480	440	400	365	320	275
	7		705	665	625	580	535	495	455	420	380	345
	8	Heat	730	690	650	600	560	520	480	445	405	370
	9		775	735	695	655	610	570	535	495	460	425
	10		800	765	725	690	645	605	565	535	495	465
	11		850	815	775	740	700	660	625	590	555	525
	12		900	870	835	800	765	725	690	655	620	590
	13		955	920	890	855	825	785	750	715	685	650
	14		995	965	930	900	865	835	800	765	730	700
	15		1040	1010	980	950	920	890	855	825	790	760
	16		1085	1055	1025	1000	970	940	910	875	845	810
	17		1135	1110	1080	1050	1025	990	965	935	905	870
	18	Cooling	1215	1190	1160	1130	1090	1055	1020	985	940	900
36040B	1	Cont. Fan	400	335	270	210	140	-	-	-	-	-
	2		485	425	365	310	265	200	140	-	-	-
	3		530	475	415	360	320	270	210	150	-	-
	4		585	530	480	425	375	340	295	235	185	145
	5		620	570	520	470	420	380	345	295	245	195
	6		660	610	565	515	470	420	385	350	300	255
	7		705	660	615	570	525	480	435	405	370	325
	8		730	685	640	595	550	505	460	430	400	360
	9	Heat	760	720	675	630	590	550	500	465	435	405
	10		800	760	720	680	635	595	555	510	480	450
	11		850	810	770	730	695	655	615	575	535	505
	12		900	865	830	795	755	720	680	645	605	570
	13		960	930	895	860	825	790	755	720	685	650
	14		1010	980	945	910	875	840	810	780	745	710
	15		1060	1025	995	965	930	895	865	835	800	765
	16		1110	1080	1050	1020	985	955	925	895	865	835
	17		1165	1135	1105	1080	1045	1020	990	960	930	900
	18	Cooling	1225	1195	1165	1135	1100	1060	1020	985	945	910
36060A	1	Cont. Fan	585	515	445	380	320	260	195	145	-	-
	2		630	570	510	440	380	330	270	205	160	-
	3		695	635	580	520	460	405	355	300	240	180
	4		735	685	630	575	510	460	410	360	310	250
	5		780	725	675	620	565	510	455	410	365	315
	6		800	755	700	650	600	540	490	440	400	355
	7		875	830	785	735	690	640	585	540	495	450
	8		935	890	845	805	760	715	665	615	570	525
	9		990	950	910	865	820	780	735	690	640	600
	10		1025	980	940	900	860	820	775	730	685	640
	11		1045	1005	965	925	880	840	800	760	710	670
	12	Heat	1100	1065	1025	990	950	910	870	835	790	745
	13		1160	1120	1085	1050	1010	975	935	900	860	820
	14		1195	1160	1120	1085	1050	1015	975	940	905	870
	15		1215	1180	1150	1115	1080	1045	1005	970	935	900
	16		1285	1250	1220	1185	1150	1120	1085	1050	1015	980
	17		1345	1315	1285	1255	1220	1190	1155	1125	1090	1060
	18	Cooling	1405	1375	1345	1315	1285	1255	1220	1190	1160	1125
42060B	1	Cont. Fan	530	440	350	270	200	125	-	-	-	-
	2		610	530	450	365	295	235	170	-	-	-
	3		645	570	495	410	335	280	220	155	-	-
	4		680	610	530	455	380	320	265	205	140	-
	5		730	665	590	520	440	375	325	270	215	150
	6		790	725	660	595	520	455	390	345	290	240
	7		845	785	725	665	600	530	465	410	365	320
	8		900	840	785	725	665	600	535	480	425	385
	9	Heat	965	910	860	805	750	690	620	565	505	460
	10		1010	960	910	860	805	750	695	625	570	520
	11		1065	1015	970	920	870	820	765	710	650	595
	12		1135	1085	1040	995	950	900	850	795	740	685
	13		1195	1150	1105	1060	1015	970	925	880	825	770
	14		1250	1205	1160	1120	1080	1035	995	950	905	850
	15		1320	1275	1235	1195	1155	1110	1070	1030	985	940
	16		1380	1335	1295	1260	1220	1180	1140	1100	1060	1020
	17		1440	1400	1360	1325	1290	1250	1215	1175	1135	1100
	18	Cooling	1485	1450	1410	1375	1340	1300	1265	1230	1190	1155

Manufacturer reserves the right to change, at any time, specifications and designs without notice and without obligations.

Air Delivery - CFM (with filter) (Continued)

Unit Size	Airflow Setting	Default Setting	External Static Pressure (in. w.c.)									
			0.1	0.2	0.3	0.4	0.5	0.6	0.7	0.8	0.9	1
48080B	1	Cont. Fan	595	510	425	345	270	195	125	-	-	-
	2		655	580	500	425	345	280	215	145	-	-
	3		740	670	600	525	460	390	325	265	205	145
	4		810	750	685	620	555	495	425	365	310	255
	5		880	820	765	705	640	580	525	460	400	350
	6		945	890	835	780	720	660	605	555	490	435
	7		1005	950	900	845	795	735	680	630	580	520
	8		1080	1030	980	930	880	830	780	725	680	630
	9		1150	1105	1055	1010	965	915	870	820	770	725
	10		1235	1190	1145	1100	1060	1015	970	925	880	835
	11	Heat	1345	1300	1260	1220	1180	1140	1100	1060	1020	975
	12		1390	1345	1305	1265	1230	1190	1150	1115	1075	1030
	13		1475	1435	1395	1360	1320	1285	1250	1215	1175	1140
	14		1560	1520	1485	1445	1410	1380	1345	1310	1275	1240
	15		1630	1595	1560	1525	1495	1460	1425	1400	1365	1335
	16		1720	1685	1655	1620	1585	1555	1525	1500	1470	1440
	17	Cooling	1805	1770	1740	1710	1680	1650	1620	1595	1570	1545
	18		1910	1885	1850	1820	1790	1750	1710	1670	1630	1590
60080C	1	Cont. Fan	660	555	460	370	275	190	-	-	-	-
	2		720	630	535	450	360	275	195	120	-	-
	3		780	690	605	520	440	355	275	200	125	-
	4		860	780	695	615	535	460	385	315	240	170
	5		940	860	780	705	630	560	490	415	350	280
	6		1025	955	880	810	740	670	600	540	470	405
	7		1110	1040	975	905	840	770	710	645	590	525
	8		1190	1125	1060	995	935	870	810	745	685	635
	9		1285	1220	1160	1100	1045	985	920	865	805	750
	10		1355	1295	1235	1180	1120	1065	1010	955	895	840
	11	Heat	1420	1365	1310	1255	1200	1145	1090	1040	985	930
	12		1530	1480	1425	1375	1325	1275	1220	1170	1120	1070
	13		1610	1555	1505	1460	1410	1360	1310	1265	1215	1165
	14		1695	1645	1595	1550	1505	1460	1410	1365	1320	1275
	15		1780	1730	1685	1640	1595	1550	1510	1465	1425	1380
	16		1860	1815	1770	1730	1685	1645	1600	1560	1520	1480
	17		1945	1905	1865	1820	1780	1745	1710	1670	1635	1595
	18	Cooling	2050	2010	1970	1930	1890	1845	1795	1745	1690	1635
60100C	1	Cont. Fan	740	640	545	455	375	295	215	140	-	-
	2		830	740	650	565	480	410	335	260	190	-
	3		905	825	740	655	575	505	440	375	300	235
	4		975	900	820	740	665	585	525	465	400	335
	5		1045	975	900	820	750	675	605	550	490	430
	6		1130	1065	995	925	850	780	715	650	595	540
	7		1210	1145	1080	1015	945	880	815	750	690	640
	8		1285	1225	1165	1105	1040	975	910	850	790	730
	9		1355	1300	1240	1185	1125	1060	1000	940	880	820
	10		1435	1380	1330	1275	1225	1165	1105	1045	990	935
	11		1535	1480	1430	1380	1330	1280	1225	1170	1115	1060
	12		1610	1560	1510	1460	1415	1365	1315	1260	1210	1160
	13	Heat	1665	1620	1570	1525	1480	1430	1385	1335	1280	1235
	14		1695	1650	1600	1555	1510	1465	1420	1370	1320	1270
	15		1780	1735	1690	1650	1605	1560	1515	1470	1425	1380
	16		1870	1830	1790	1745	1705	1665	1625	1585	1540	1500
	17		1965	1925	1880	1845	1805	1770	1730	1695	1655	1615
	18	Cooling	2060	2020	1980	1945	1905	1870	1820	1765	1710	1655
60120D	1	Cont. Fan	770	665	545	445	355	275	185	-	-	-
	2		830	725	615	515	425	345	265	180	130	-
	3		915	815	725	615	525	445	370	295	220	165
	4		990	895	810	710	620	540	465	395	325	255
	5		1085	1000	915	835	740	655	580	510	445	380
	6		1170	1095	1010	935	855	765	690	620	555	490
	7		1235	1160	1080	1005	935	850	770	700	635	570
	8		1330	1260	1190	1115	1050	980	900	820	755	695
	9		1405	1335	1270	1200	1135	1070	1000	920	850	790
	10		1490	1425	1365	1295	1235	1170	1110	1040	965	900
	11		1585	1525	1470	1405	1340	1285	1230	1170	1105	1030
	12		1665	1605	1550	1495	1435	1375	1320	1270	1210	1145
	13		1750	1700	1645	1595	1535	1480	1425	1375	1320	1270
	14		1835	1785	1740	1685	1630	1575	1525	1475	1430	1385
	15	Heat	1880	1830	1780	1730	1680	1625	1575	1530	1480	1435
	16		1920	1875	1825	1775	1730	1675	1625	1580	1535	1490
	17		1995	1945	1900	1855	1810	1760	1715	1670	1625	1585
	18	Cooling	2115	2065	2020	1975	1930	1875	1815	1750	1690	1630

Manufacturer reserves the right to change, at any time, specifications and designs without notice and without obligations.

NOTE:

1. A filter is required for each return-air inlet. Airflow performance included 3/4" (19 mm) washable filter media such as contained in a factory - authorized accessory filter rack. See accessory list. To determine airflow performance without this filter, assume an additional 0.1 in. w.c. available external static pressure.
2. **Adjust the blower airflow settings as necessary for the proper air temperature rise for each installation.**
3. Airflows over 1800 CFM require bottom return, two-side return, or bottom and side return. A minimum filter size of 20" x 25" (508 x 635 mm) is required.
4. For upflow applications, air entering from one side into both the side of the furnace and a return air base counts as a side and bottom return
5. The -- entry indicates unstable operating conditions

Airflow Settings

	Default Airflow Settings*		Designated Airflow Settings	
Unit Size	**Heating**	**Cooling**	**Heating**	**Const. Fan**
36040A	8	18	(5-8)	(1-4)
36040B	9	18	(4-9)	(1-1)
36060A	12	18	(6-14)	(1-6)
42060B	9	18	(7-14)	(1-8)
48080B	11	17	(8-14)	(1-8)
60080C	11	18	(7-14)	(1-8)
60100C	13	18	(7-16)	(1-7)
60120D	15	18	(12-16)	(1-1)

*. Setting #1 is the default setting for Constant Fan

TYPICAL WIRING SCHEMATIC

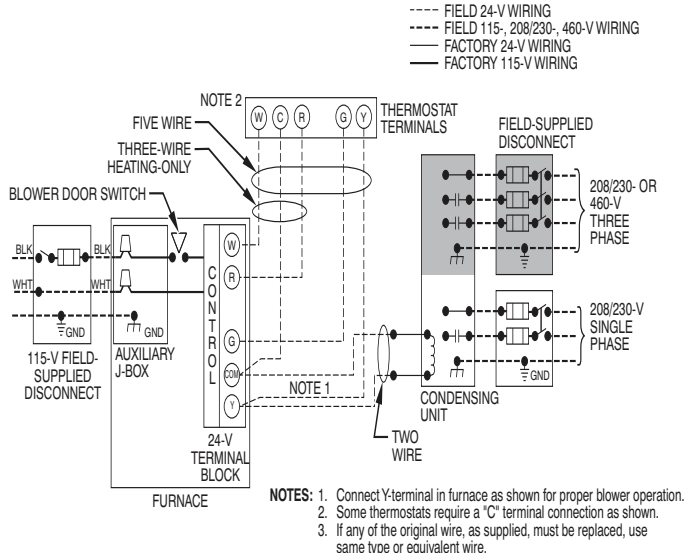

A190079

FURNACE CONTROL BOARD

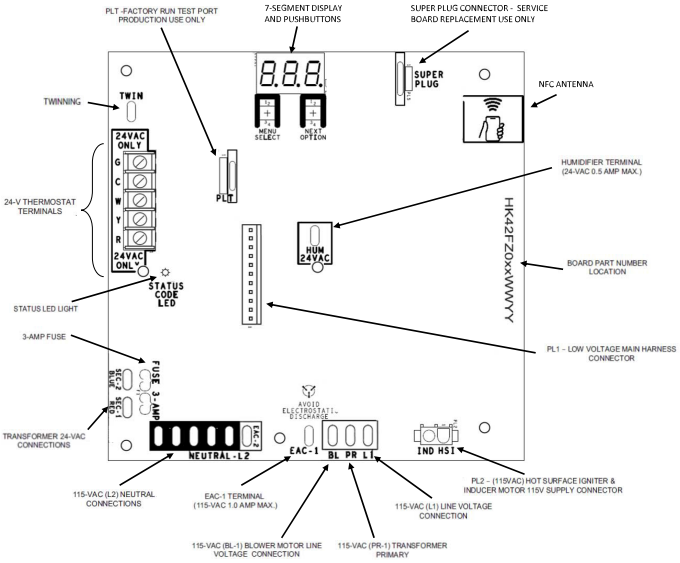

A210192

MAXIMUM ALLOWABLE EXPOSED VENT LENGTH

Maximum Allowable Exposed Vent Lengths in Unconditioned Space Insulation Table - Ft.

	Unit Size	40,000* BTUH									60,000 BTUH											
		Uninsulated			3/8-in. Insulation			1/2-in. Insulation			Uninsulated				3/8-in. Insulation				1/2-in. Insulation			
Winter Design Temp °F	**Pipe Dia. in.**	**1 ½**	**2**	**2 ½**	**1 ½**	**2**	**2 ½**	**1 ½**	**2**	**2 ½**	**1 ½**	**2**	**2 ½**	**3**	**1 ½**	**2**	**2 ½**	**3**	**1 ½**	**2**	**2 ½**	**3**
	20	20	20	20	20	50	45	20	60	50	20	30	30	25	20	75	65	60	20	85	75	65
	0	10	5	5	20	25	20	20	30	25	15	15	10	10	20	40	30	25	20	45	40	30
	-20	5			20	15	10	20	20	15	10	5			20	25	20	15	20	30	25	20
	-40				15	10	5	15	15	10	5				20	15	15	10	20	20	15	10

*. Not all model families have this size.

	Unit Size	80,000 BTUH														
		Uninsulated					3/8-in. Insulation					1/2-in. Insulation				
Winter Design Temp °F	**Pipe Dia. in.**	**1 ½**	**2**	**2 ½**	**3**	**4**	**1 ½**	**2**	**2 ½**	**3**	**4**	**1 ½**	**2**	**2 ½**	**3**	**4**
	20	15	40	40	35	30	15	50	90	75	65	15	50	70	70	70
	0	15	20	15	10	5	15	50	45	35	30	15	50	50	40	35
	-20	15	10	5			15	35	30	20	15	15	40	30	25	15
	-40	10	5				15	25	20	15	5	15	30	25	20	10

Manufacturer reserves the right to change, at any time, specifications and designs without notice and without obligations.

Winter Design Temp °F	Unit Size	100,000 BTUH												120,000 BTUH								
		Uninsulated				3/8-in. Insulation				1/2-in. Insulation				Uninsulated			3/8-in. Insulation			1/2-in. Insulation		
	Pipe Dia. in.	2	2 ½	3	4	2	2½	3	4	2	2½	3	4	2 ½	3	4	2 ½	3	4	2 ½	3	4
	20	20	50	40	35	20	80	95	80	20	80	105	90	10	50	40	10	75	95	10	75	105
	0	20	20	15	10	20	55	45	35	20	65	55	45	10	20	15	10	55	45	10	65	50
	-20	15	10	5		20	35	30	20	20	45	35	25	10	10		10	35	25	10	45	30
	-40	10	5			20	25	20	10	20	30	25	15	10	5		10	25	15	10	30	20

Maximum Allowable Exposed Vent Length in Unconditioned Space - Meters

Winter Design Temp °C	Unit Size	40,000* BTUH									60,000 BTUH											
		Uninsulated			3/8-in. Insulation			1/2-in. Insulation			Uninsulated				3/8-in. Insulation				1/2-in. Insulation			
	Pipe Dia. mm	38	51	64	38	51	64	38	51	64	38	51	64	76	38	51	64	76	38	51	64	76
	-7	6.1	6.1	6.1	6.1	15.2	13.7	6.1	18.3	15.2	6.1	9.1	9.1	7.6	6.1	22.9	19.8	18.3	6.1	25.9	22.9	19.8
	-18	3.0	1.5	1.5	6.1	7.6	6.1	6.1	9.1	7.6	4.6	4.6	3.0	3.0	6.1	12.2	9.1	7.6	6.1	13.7	12.2	9.1
	-29	1.5			6.1	4.6	3.0	6.1	6.1	4.6	3.0	1.5			6.1	7.6	6.1	4.6	6.1	9.1	7.6	6.1
	-40				4.6	3.0	1.5	4.6	4.6	3.0	1.5				6.1	4.6	4.6	3.0	6.1	6.1	4.6	3.0

*. Not all model families have this size.

Winter Design Temp °C	Unit Size	80,000 BTUH														
		Uninsulated					3/8-in. Insulation					1/2-in. Insulation				
	Pipe Dia. mm	38	51	64	76	102	38	51	64	76	102	38	51	64	76	102
	-7	4.6	12.2	12.2	10.7	9.1	4.6	15.2	27.4	22.9	19.8	4.6	15.2	21.3	21.3	21.3
	-18	4.6	6.1	4.6	3.0	1.5	4.6	15.2	13.7	10.7	9.1	4.6	15.2	15.2	12.2	10.7
	-29	4.6	3.0	1.5			4.6	10.7	9.1	6.1	4.6	4.6	12.2	9.1	7.6	4.6
	-40	3.0	1.5				4.6	7.6	6.1	4.6	1.5	4.6	9.1	7.6	6.1	3.0

Winter Design Temp °C	Unit Size	100,000 BTUH												120,000 BTUH								
		Uninsulated				3/8-in. Insulation				1/2-in. Insulation				Uninsulated			3/8-in. Insulation			1/2-in. Insulation		
	Pipe Dia. mm	51	64	76	102	51	64	76	102	51	64	76	102	64	76	102	64	76	102	64	76	102
	-7	6.1	15.2	12.2	10.7	6.1	24.4	28.9	24.4	6.1	24.4	32.0	27.4	3.0	15.2	12.2	3.0	22.9	28.9	3.0	22.9	32.0
	-18	6.1	6.1	4.6	3.0	6.1	16.8	13.7	10.7	6.1	19.8	16.7	13.7	3.0	6.1	4.6	3.0	16.8	13.7	3.0	19.8	15.2
	-29	4.6	3.0	1.5		6.1	10.7	9.1	6.1	6.1	13.7	10.7	7.6	3.0	3.0		3.0	10.7	7.6	3.0	13.7	9.1
	-40	3.0	1.5			6.1	7.6	6.1	3.0	6.1	9.1	7.6	4.6	3.0	1.5		3.0	7.6	4.6	3.0	9.1	6.1

Maximum Equivalent Vent Length - Ft.

NOTE: Maximum Equivalent Vent Length (MEVL) includes standard and concentric vent termination and does NOT include elbows. Use Deductions from Maximum Equivalent Vent Length to determine allowable vent length for each application.

Single Stage 92% - Feet

Unit Size		40,000 *			60,000 †				80,000					100,000 ‡				120,000 ‡		
	Pipe Dia. (in)	1 ½	2	2 ½	1 ½	2	2 ½	3	1 ½	2	2 ½	3	4	2	2 ½	3	4	2 ½	3	4
	0-2000	20	85	185	20	100	175	200	15	55	130	175	200	20	80	175	200	10	75	185
	2001-3000	15	80	175		95	165	185	10	49	125	165	185	15	75	165	185		70	175
	3001-4000		70	160	16	90	155	175			115	155	175			155	175	5	65	165
Altitude (feet)	4001-4500	10		155	15	85	150	170		44	110	150	165	10	70		170	N/A	60	160
	4501-5000			145		80		165				145	160		65	150	165			
	5001-6000		60	130		75	140	155		41	100	135	150			140	155			155
	6001-7000	5	55	120	13	70	130	145	N/A	38	90	125	140		60	135	145		50	140
	7001-8000		50	110	10	65	120	135		36		120	125	N/A	55	125	135		46	130
	8001-9000	N/A	30	95	5	60	115	125		33	80	110	115		50	115	125		43	120
	9001-10000		25	85	N/A	55	105	115		30	75	100	105		45	100	115		39	115

Single Stage 92% - Meters

Unit Size		40,000 *			60,000 †				80,000					100,000 ‡				120,000 ‡		
	Pipe Dia. (mm)	38	51	64	38	5	64	76	38	51	64	76	102	51	64	76	102	64	76	102
	0-610	6.0	25.9	56.3	6.0	30.4	53.3	60.9	4.5	16.7	39.6	53.3	60.9	6.0	24.3	53.3	60.9	3.0	22.8	56.3
	611-914	4.5	24.3	53.3		28.9	50.2	56.3	3.0	14.9	38.1	50.2	56.3	4.5	22.8	50.2	56.3		21.3	53.3
	915-1219		21.3	48.7	4.8	27.4	47.2	53.3			35.0	47.2	53.3		0.0	47.2	53.3	1.5	19.8	50.2
	1220-1370	3.0		47.2	4.5	25.9	45.7	51.8		13.4	33.5	45.7	50.2	3.0	21.3		51.8	N/A	18.2	48.7
Altitude (meters)	1371-1524			44.1		24.3		50.2			0.0	44.1	48.7		19.8	45.7	50.2			
	1525-1829		18.2	39.6		22.8	42.6	47.2		12.4	30.4	41.1	45.7		0.0	42.6	47.2			47.2
	1830-2134	1.5	16.7	36.5	3.9	21.3	39.6	44.1	N/A	11.5	27.4	.1	42.6		18.2	41.1	44.1		15.2	42.6
	2135-2438		15.2	33.5	3.0	19.8	36.5	41.1		10.9	0.0	36.5	38.1	N/A	16.7	38.1	41.1		14.0	39.6
	2439-2743	N/A	9.1	28.9	1.5	18.2	35.0	38.1		10.0	24.3	33.5	35.0		15.2	35.0	38.1		13.1	36.5
	2744-3048		7.6	25.9	N/A	16.7	32.0	35.0		9.1	22.8	30.4	32.0		13.7	30.4	35.0		11.8	35.0

*. 40K Inducer Outlet Restrictor disk (P/N 337683-401; 1.25-in. (32 mm) Dia.) shipped in the loose parts bag or available through Replacement Components is required for all orientations for installations from 0–2000 ft. (0–610 M) above sea level and where TEVL is no greater than 10 ft. (3 M). Failure to use an outlet restrictor may result in flame disturbances or flame sense lockout.

†. 60K Inducer Outlet Restrictor disk (P/N 337683-401; 1.25-in. (32 mm) Dia.) available through Replacement Components is required in downflow orientations for installations from 0–2000 ft. (0–610 M) above sea level and where TEVL is no greater than 5 ft. (1.5 M).

‡. 100K / 120K Inducer Outlet Restrictor disk (P/N 337683-402; 1.50-in. (38 mm) Dia.) available through Replacement Components is required in downflow orientations for installations from 0–2000 ft. (0–610 M) above sea level and where TEVL is no greater than 5 ft. (1.5 M).

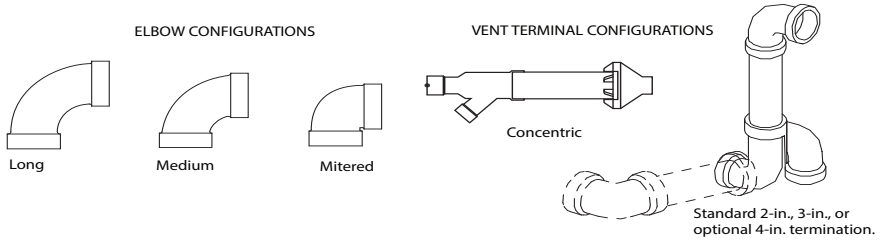

A13110

Deductions from Maximum Equivalent Vent Length - Ft. (M)

Pipe Diameter (in):	1-1/2		2		2-1/2		3		4	
Mitered 90º Elbow	8	(2.4)	8	(2.4)	8	(2.4)	8	(2.4)	8	(2.4)
Medium Radius 90º Elbow	5	(1.5)	5	(1.5)	5	(1.5)	5	(1.5)	5	(1.5)
Long Radius 90º Elbow	3	(0.9)	3	(0.9)	3	(0.9)	3	(0.9)	3	(0.9)
Mitered 45º Elbow	4	(1.2)	4	(1.2)	4	(1.2)	4	(1.2)	4	(1.2)
Medium Radius 45º Elbow	2.5	(0.8)	2.5	(0.8)	2.5	(0.8)	2.5	(0.8)	2.5	(0.8)
Long Radius 45º Elbow	1.5	(0.5)	1.5	(0.5)	1.5	(0.5)	1.5	(0.5)	1.5	(0.5)
Tee	16	(4.9)	16	(4.9)	16	(4.9)	16	(4.9)	16	(4.9)
Concentric Vent Termination	NA		0	(0.0)	NA		0	(0.0)	NA	
Standard Vent Termination	0	(0.0)	0	(0.0)	0	(0.0)	0	(0.0)	0	(0.0)

NOTE:

1. Use only the smallest diameter pipe possible for venting. Over-sizing may cause flame disturbance or excessive vent terminal icing or freeze-up.
2. NA - Not allowed. Pressure switch will not close, or flame disturbance may result.
3. Vent sizing for Canadian installations over 4500 ft (1370 M) above sea level are subject to acceptance by local authorities having jurisdiction.
4. Size both the combustion air and vent pipe independently, then use the larger size for both pipes.
5. Assume the two 45° elbows equal one 90° elbow. Wide radius elbows are desirable and may be required in some cases.
6. Elbow and pipe sections within the furnace casing and at the vent termination should not be included in vent length or elbow count.
7. The minimum pipe length is 5 ft. (2 M) linear feet (meters) for all applications.
8. Use 3-in. (76 mm) diameter vent termination kit for installations requiring 4-in. (102 mm) diameter pipe

Venting System Length Calculations

The Total Equivalent Vent Length (TEVL) for **EACH** combustion air or vent pipe equals the length of the venting system, plus the equivalent length of elbows used in the venting system from Deductions from Maximum Equivalent Vent Length - Ft. (M) Table.

Standard vent terminations or factory accessory concentric vent terminations count for zero deduction.

See vent system manufacturer's data for equivalent lengths of flexible vent pipe or other termination systems. **DO NOT ASSUME** that one foot of flexible vent pipe equals one foot of straight PVC/ABS DWV vent pipe.

Compare the Total Equivalent Vent Length to the Maximum Equivalent Vent Lengths in Maximum Equivalent Vent Length Table.

Example 1

A direct-vent 60,000 BTUH furnace installed at 2100 ft. (640M). Venting system includes **FOR EACH PIPE:**
70 feet (22 M) of vent pipe, 65 feet (20 M) of combustion air inlet pipe, (3) 90º long-radius elbows, (2) 45º long-radius elbows, and a factory accessory concentric vent kit.

Can this application use 2" (50 mm ND) PVC/ABS DWV vent piping?

Measure the required linear length of air inlet and vent pipe; insert the longest of the two here					70 ft. (22 M)	Use length of the longer of the vent or air inlet piping system
Add equiv length of (3) 90º long-radius elbows (use the highest number of elbows for either the vent or inlet pipe)	3	x	3 ft. (0.9 M)	=	9 ft. (2.7 M)	From Deductions from Maximum Equivalent Vent Length - Ft. (M) Table.
Add equiv length of (2) 45º long-radius elbows (use the highest number of elbows for either the vent or inlet pipe)	2	x	1.5 ft. (0.5 M)	=	3 ft. (0.9 M)	From Deductions from Maximum Equivalent Vent Length - Ft. (M) Table.
Add equiv length of factory concentric vent term					0 ft.	From Deductions from Maximum Equivalent Vent Length - Ft. (M) Table.
Add correction for flexible vent pipe, if any					0 ft.	From Vent Manufacturer's instructions; zero for PVC/ABS DWV
Total Equivalent Vent Length (TEVL)					82 ft. (25 M)	Add all of the above lines
Maximum Equivalent Vent Length (MEVL)					95 ft. (29 M)	For 2" pipe from Maximum Equivalent Vent Length Table.
Is TEVL less than MEVL?					YES	Therefore, 2" pipe MAY be used

Example 2

A direct-vent 60,000 BTUH furnace installed at 2100 ft. (640M). Venting system includes **FOR EACH PIPE:**
100 feet (30 M) of vent pipe, 95 feet (29 M) of combustion air inlet pipe, (3) 90º long-radius elbows, and a polypropylene concentric vent kit. Also includes 20 feet (6.1 M) of flexible polypropylene vent pipe, included within the 100 feet (30 M) of vent pipe.

VERIFY FROM POLYPROPYLENE VENT MANUFACTURER'S INSTRUCTIONS for the multiplier correction for flexible vent pipe.

Can this application use 60mm o.d. (2") polypropylene vent piping? If not, what size piping can be used?

Measure the required linear length of **RIGID** air inlet and vent pipe; insert the longest of the two here: 100 ft. Of rigid pipe - 20 ft. Of flexible pipe				=	80 ft. (24 M)	Use length of the longer of the vent or air inlet piping system
Add equiv length of (3) 90º long-radius elbows (use the highest number of elbows for either the vent or inlet pipe)	3	x	5 ft. (1.5 M)	=	15 ft. (4.6 M)	Example from polypropylene vent manufacturer's instructions, Verify from vent manufacturer's instructions.
Add equiv length of 45º long-radius elbows (use the highest number of elbows for either the vent or inlet pipe)	0	x		=	0 ft. (0 M)	
Add equiv length of factory concentric vent term	9	x	3.3 ft (0.9 M)	=	30 ft. (9 M)	
Add correction for flexible vent pipe, if any	2*	x	20 ft. (6.1 M)	=	40 ft. (12.2 M)	
* VERIFY FROM VENT MANUFACTURER'S INSTRUCTIONS; For example only, assume 1 meter of flexible 60mm (2") or 80mm (3") polypropylene pipe equals 2.0 meters (6.5 ft.) of PVC/ABS pipe.						
Total Equivalent Vent Length (TEVL)					165 ft. (50 M)	Add all of the above lines
Maximum Equivalent Vent Length (MEVL)					95 ft. (29 M)	For 2" pipe from Maximum Equivalent Vent Length Table.
Is TEVL less than MEVL?					NO	Therefore, 60mm (2") pipe may NOT be used; try 80mm (3")
Maximum Equivalent Vent Length (MEVL)					185 ft. (57 M)	For 3" pipe from Maximum Equivalent Vent Length Table.
Is TEVL less than MEVL?					YES	Therefore, 80mm (3") pipe MAY be used

RETURN AIR TEMPERATURE

This furnace is designed for continuous return-air minimum temperature of 60°F (15°C) db or intermittent operation down to 55°F (13°C) db such as when used with a night setback thermometer. Return-air temperature must not exceed 80°F (27°C) db. Failure to follow these return air limits may affect reliability of heat exchangers, motors and controls.

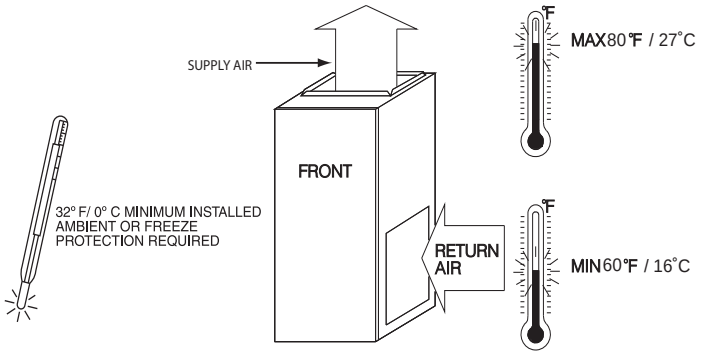

A10490

COMBUSTION-AIR PIPE FOR NON-DIRECT (1-PIPE) VENT APPLICATION

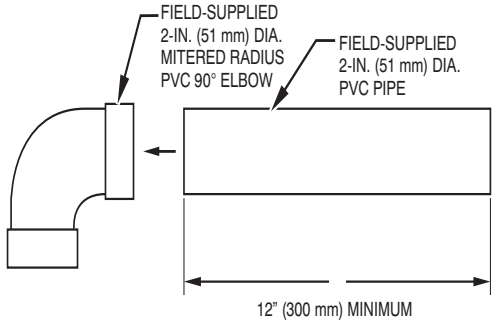

A12376

NOTE: See Installation Instructions for specific venting configurations.

DOWNFLOW SUBBASE

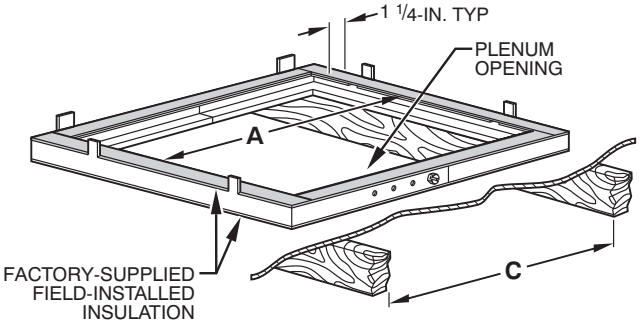

A97427

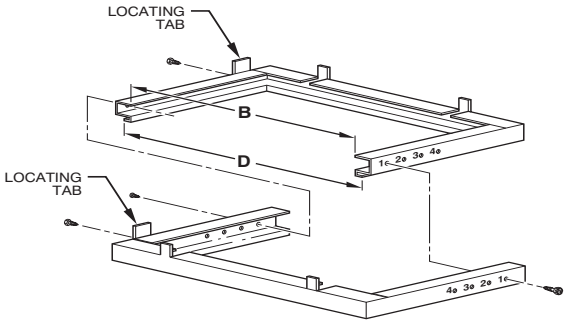

A88207

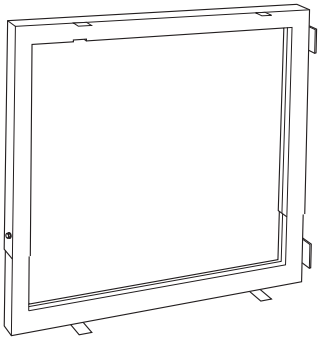

Downflow Subbase

A88202

One base fits all furnace sizes. The base is designed to be installed between the furnace and a combustible floor when no coil box is used or when a coil box other than a cased coil is used. It is CSA design certified for use with branded furnaces when installed in downflow applications.

DIMENSIONS (IN. / MM)						
FURNACE CASING WIDTH	FURNACE IN DOWNFLOW APPLICATION	PLENUM OPENING*		FLOOR OPENING		HOLE NO. FOR WIDTH ADJUSTMENT
		A	B	C	D	
14-3/16 (360)	Furnace with or without Cased Coil Assembly or Coil Box	11-3/16 (322)	19 (483)	13-7/16 (341)	20-5/8 (600)	4
17-1/2 (445)	Furnace with or without Cased Coil Assembly or Coil Box	15-1/8 (384)	19 (483)	16-3/4 (426)	20-5/8 (600)	3
21 (533)	Furnace with or without Cased Coil Assembly or Coil Box	18-5/8 (396)	19 (483)	20-1/4 (514)	20-5/8 (600)	2
24-1/2 (622)	Furnace with or without Cased Coil Assembly or Coil Box	22-1/8 (562)	19 (483)	23-3/4 (603)	20-5/8 (600)	1

*. The plenum should be constructed 1/4-in. (6 mm) smaller in width and depth than the plenum dimensions shown above.

Manufacturer reserves the right to change, at any time, specifications and designs without notice and without obligations.

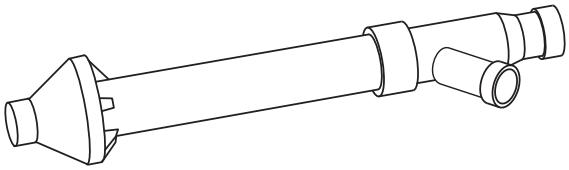

Concentric Vent Kit

A93086

A concentric vent kit allows vent and combustion-air pipes to terminate through a single exit in a roof or side wall. One pipe runs inside the other allowing venting through the inner pipe and combustion air to be drawn in through the outer pipe.

MEDIA FILTER CABINET (OPTIONAL ACCESSORY)

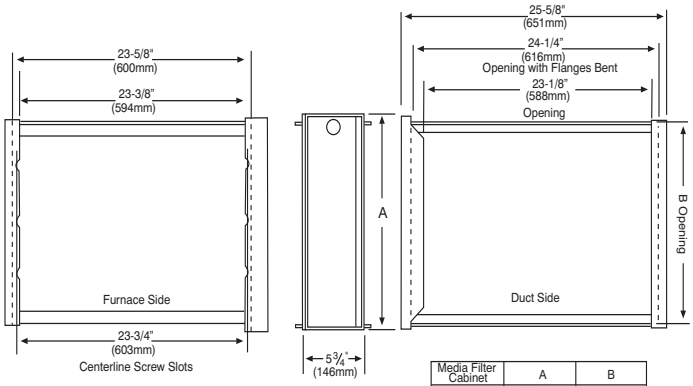

Media Filter Cabinet	A	B
16" (406mm)	17" (432mm)	16" (406mm)
20" (508mm)	21" (533mm)	20" (508mm)
24" (610mm)	25" (635mm)	24" (610mm)

NOTE: Media cabinet is matched to the bottom opening on furnace. May also be used for side return.

A12428

ACCESSORIES

PART NUMBER	DESCRIPTION	36040A	60040B	36060A	42060B
P908-0001*	Condensate Neutralizer Kit	X	X	X	X
92-1003*	Gas Valve Tower Port Adapter Kit	X	X	X	X
ACG1425NCB*	External Filter Rack, 14-1/2 x 25”	X	-	X	-
ACG1625NCF*	External Filter Rack, 16 x 25”	-	X	-	X
325531-402*	Washable filter, 3/4” x 16” x 25”	X	X	X	X
KGADA0101ALL	Coil Adapter Kits - No Offset	X	X	X	X
KGADA0201ALL	Coil Adapter Kits - Single Offset	X	X	X	X
KGADA0301ALL	Coil Adapter Kits - Double Offset	X	X	X	X
KGARP0301B14	Return Air Base (Upflow Applications) 14” wide	X	-	X	-
KGARP0301B17	Return Air Base (Upflow Applications) 17-1/2” wide	-	X	-	X
KGADC0101BVC	Vent Kit - Through the Cabinet	X	X	X	X
KGAVT0701CVT	Vent Terminal - Concentric - 2” (51 mm)	See Venting Tables			
KGAVT0801CVT	Vent Terminal - Concentric - 3” (76 mm)				
KGAVT0101BRA	Vent Terminal Bracket - 2” (51 mm)				
KGAVT0201BRA	Vent Terminal Bracket - 3” (76 mm)				
KGAAC0101RVC	Vent Kit - Rubber Coupling				
KGAHT0101CFP	Freeze Protect Kit - Condensate Drain Line Tape	X	X	X	X
KGAHT0201CFP	Freeze Protect Kit - Condensate Trap with Heat Pad	X	X	X	X
KGAAD0110PVC	CPVC to PVC Drain Adapters - 1/2” CPVC to 3/4” PVC	X	X	X	X
KGACK0101HCK	Horizontal Trap Grommet - Direct Vent	All 2-Pipe Horizontal			
KGAET0201ETK	External Trap Kit	X	X	X	X
KGASB0201ALL	Downflow Furnace Base Kit for Combustible Floors	X	X	X	X
KGAAD0101MEC	IAQ Device Duct Adapters 20.0-in. IAQ to 16 in. Side Return	20”x25” IAQ Devices			
KGAAD0201MEC	IAQ Device Duct Adapters 24.0-in. IAQ to 16 in. Side Return	24”x25” IAQ Devices			
AGAGC9NPS01C*	Gas Conversion Kit - Nat to LP†	X	X	X	X
AGAGC9PNS01C*	Gas Conversion Kit - LP to Nat†	X	X	X	X
AGAGCAMHC01A	Manufactured Home Kit - Gas Conversion†	X	X	X	X
AGATWNPUA01A	Twinning Kit	-	-	-	X

*. Purchased through Replacement Components
†. Factory-authorized and field installed. Fuel conversion kits are CSA recognized.
X = Accessory

ACCESSORIES (continued)

PART NUMBER	DESCRIPTION	48080B	60080C	60100C	60120D
P908-0001*	Condensate Neutralizer Kit	X	X	X	X
92-1003*	Gas Valve Tower Port Adapter Kit	X	X	X	X
ACG1625NCF*	External Filter Rack, 16 x 25”	X	-	-	-
ACG2025NCJ*	External Filter Rack, 20 x 25”	-	X	X	-
ACG2424NCL*	External Filter Rack, 24-1/2 x 24”	-	-	-	X
325531-402*	Washable filter, 3/4” x 16” x 25”	X	-	-	-
325531-403*	Washable filter, 3/4” x 21” x 25”	-	X	X	-
325531-404*	Washable filter, 3/4” x 24” x 25”	-	-	-	X
KGADA0101ALL	Coil Adapter Kits - No Offset	X	X	X	X
KGADA0201ALL	Coil Adapter Kits - Single Offset	X	X	X	X
KGADA0301ALL	Coil Adapter Kits - Double Offset	X	X	X	X
KGARP0301B17	Return Air Base (Upflow Applications) 17-1/2” wide	X	-	-	-
KGARP0301B21	Return Air Base (Upflow Applications) 21” wide	-	X	X	-
KGARP0301B24	Return Air Base (Upflow Applications) 24-1/2 wide	-	-	-	X
KGADC0101BVC	Vent Kit - Through the Cabinet	X	X	X	X
KGAVT0701CVT	Vent Terminal - Concentric - 2” (51 mm)	See Venting Tables			
KGAVT0801CVT	Vent Terminal - Concentric - 3” (76 mm)				
KGAVT0101BRA	Vent Terminal Bracket - 2” (51 mm)				
KGAVT0201BRA	Vent Terminal Bracket - 3” (76 mm)				
KGAAC0101RVC	Polypropylene Inlet Air Pipe Coupling	X	X	X	X
KGAHT0101CFP	Freeze Protect Kit - Condensate Drain Line Tape	X	X	X	X
KGAHT0201CFP	Freeze Protect Kit - Condensate Trap with Heat Pad	X	X	X	X
KGAAD0110PVC	CPVC to PVC Drain Adapters - 1/2” CPVC to 3/4” PVC	X	X	X	X
KGACK0101HCK	Horizontal Trap Grommet - Direct Vent	All 2-Pipe Horizontal			
KGAET0201ETK	External Trap Kit	X	X	X	X
KGASB0201ALL	Downflow Furnace Base Kit for Combustible Floors	X	X	X	X
KGAAD0101MEC	IAQ Device Duct Adapters 20.0-in. IAQ to 16 in. Side Return	20”x25” IAQ Devices			
KGAAD0201MEC	IAQ Device Duct Adapters 24.0-in. IAQ to 16 in. Side Return	24”x25” IAQ Devices			
AGAGC9NPS01C*	Gas Conversion Kit - Nat to LP†	X	X	X	X
AGAGC9PNS01C*	Gas Conversion Kit - LP to Nat†	X	X	X	X
AGAGCAMHC01A	Manufactured Home Kit - Gas Conversion†	X	X	X	X
AGATWNPUA01A	Twinning Kit	X	X	X	X
KGAPC0101ECM	Lower Amp Kit	-	X	X	-

*. Purchased through Replacement Components
†. Factory-authorized and field installed. Fuel conversion kits are CSA recognized.
X = Accessory

DESCRIPTION		
Gas Orifice Kit - #42 (Nat Gas)	LH32DB207	See Installation Instructions for model, altitude, and heat value usages.
Gas Orifice Kit - #43 (Nat Gas)	LH32DB202	
Gas Orifice Kit - #44 (Nat Gas)	LH32DB200	
Gas Orifice Kit - #45 (Nat Gas)	LH32DB205	
Gas Orifice Kit - #46 (Nat Gas)	LH32DB208	
Gas Orifice Kit - #47 (Nat Gas)	LH32DB078	
Gas Orifice Kit - #48 (Nat Gas)	LH32DB076	
Gas Orifice Kit - #54 (LP)	LH32DB203	
Gas Orifice Kit - #55 (LP)	LH32DB201	
Gas Orifice Kit - #56 (LP)	LH32DB206	
Gas Orifice Kit - 1.25mm (LP)	LH32DB209	
Gas Orifice Kit - 1.30mm (LP)	LH32DB210	

DESCRIPTION	ACCESSORY
HUMIDIFIER	Model HUM
HEAT RECOVERY VENTILATOR	Model HRV
ENERGY RECOVERY VENTILATOR	Model ERV
UV LIGHTS	Model UVL

ACCESSORIES (continued)

DESCRIPTION	ACCESSORY	14”	17”	21”	24”
Cartridge Media Filter - 16" (407 mm) (MERV 11)	FILXXCAR0116	X	X	-	-
Cartridge Media Filter - 16" (407 mm) (MERV 8)	FILXXCAR0016	X	X	-	-
Cartridge Media Filter - 20" (508 mm) (MERV 8)	FILXXCAR0020	-	-	X	-
Cartridge Media Filter - 20" (508 mm) (MERV11)	FILXXCAR0120	-	-	X	-
Cartridge Media Filter - 24" (610 mm) (MERV 8)	FILXXCAR0024	-	-	-	X
Cartridge Media Filter - 24" (610 mm) (MERV11)	FILXXCAR0124	-	-	-	X
EZ Flex Cabinet Side or Bottom - 16"	EZXCAB--0016	X	X	-	-
EZ Flex Cabinet Side or Bottom - 20"	EZXCAB--0020	-	-	X	X
EZ Flex Replacement Filters 16" MERV 10	EXPXXFIL0016	X	X	-	-
EZ Flex Replacement Filters 16" MERV 13	EXPXXFIL0316	X	X	-	-
EZ Flex Replacement Filters 20" MERV 10	EXPXXFIL0020	-	-	X	-
EZ Flex Replacement Filters 20" MERV 13	EXPXXFIL0320	-	-	X	-
EZ Flex Replacement Filters 24" MERV 10	EXPXXFIL0024	-	-	-	X
EZ Flex Replacement Filters 24" MERV 13	EXPXXFIL0324	-	-	-	X
EZ-Flex Filter with End Caps - 16" (407 mm) (MERV 10)	EXPXXUNV0016	X	X	-	-
EZ-Flex Filter with End Caps - 16" (407 mm) (MERV 13)	EXPXXUNV0316	X	X	-	-
EZ-Flex Filter with End Caps - 20" (508 mm) (MERV 10)	EXPXXUNV0020	-	-	X	-
EZ-Flex Filter with End Caps - 20" (508 mm) (MERV 13)	EXPXXUNV0320	-	-	X	-
EZ-Flex Filter with End Caps - 24" (610 mm) (MERV 10)	EXPXXUNV0024	-	-	-	X
EZ-Flex Filter with End Caps - 24" (610 mm) (MERV 13)	EXPXXUNV0324	-	-	-	X
Media Filter Cabinet - 20"	FILCABXL0020	-	-	X	-
Media Filter Cabinet - 24"	FILCABXL0024	-	-	-	X
Media Filter Cabinet - 16"	FILCABXL0016	X	X	-	-

© 2025 Carrier. All rights reserved.

Manufacturer reserves the right to change, at any time, specifications and designs without notice and without obligations.