25HNB6
Infinity® 2–Stage Heat Pump
with Puron® Refrigerant
2 to 5 Nominal Tons

Carrier
turn to the experts™

Product Data

INFINITY® SERIES

Carrier's heat pumps with Puron® refrigerant provide a collection of features unmatched by any other family of equipment. The 25HNB6 has been designed utilizing Carrier's Puron refrigerant. The environmentally sound refrigerant allows consumers to make a responsible decision in the protection of the earth's ozone layer.

This product has been designed and manufactured to meet Energy Star® criteria for energy efficiency when matched with appropriate coil components. Refer to the combination ratings in the Product Data for system combinations that meet Energy Star® guidelines.

NOTE: **Ratings contained in this document are subject to change at any time. Always refer to the AHRI directory (www.ahridirectory.org) for the most up-to-date ratings information.**

INDUSTRY LEADING FEATURES / BENEFITS

Energy Efficiency

- 13.7 - 17.2 SEER/11.2 - 13.3 EER/8.0 - 9.5 HSPF
- Microtube Technology™ refrigeration system
- Indoor air quality accessories available

Sound

- Sound level as low as 67 dBA
- Quiet mount split post compressor grommets
- Forward-swept condenser fan blade
- Compressor sound hood
- Laminated steel compressor mounting plate
- 8 pole PSC ball bearing outdoor condenser fan motor

Comfort

- System supports Infinity Control™ or standard 2-stage thermostat controls

Reliability

- Puron® refrigerant - environmentally sound, won't deplete the ozone layer and low lifetime service cost.
- Front-seating service valves
- 2-stage scroll compressor
- Internal pressure relief valve
- Internal thermal overload
- High pressure switch
- Loss of charge switch
- Filter drier
- Balanced refrigeration system for maximum reliability
- Crankcase heater standard

Durability

WeatherArmor Ultra™ protection package:

- Solid, Durable sheet metal construction
- Steel louver coil guard
- Baked-on, complete outer coverage, powder paint

Controls and Diagnostics

- Infinity™ Control or Thermostat
- 2 control wires to outdoor unit with Infinity Control (serial numbers 3112E and newer).
- Utility Interface Connection
- Enhanced diagnostics capability with Infinity™ Control

Applications

- Long-line - up to 250 feet (76.2 m) total equivalent length, up to 200 feet (60.96 m) condenser above evaporator, or up to 80 ft. (24.38 m) evaporator above condenser (See Longline Guide for more information.)

MODEL NUMBER NOMENCLATURE

1	2	3	4	5	6	7	8	9	10	11	12	13
N	N	A	A	A/N	N	N	N	A/N	A/N	A/N	N	N
2	5	H	N	B	6	3	6	A	0	0	3	0
Product Series		Product Family	Tier	Major Series	SEER	Cooling Capacity		Variations	Open	Open	Voltage	Minor Series
25 = HP		H = RES HP	N= Infinity Series	B = Puron	6=16 SEER	1,000 Btuh (nominal)		A = Standard	0=Not Defined	0=Not Defined	3=208/230–1	0, 1, 2...

Puron™
the environmentally sound refrigerant

AHRI CERTIFIED™ www.ahridirectory.org

Use of the AHRI Certified TM Mark indicates a manufacturer's participation in the program For verification of certification for individual products, go to www.ahridirectory.org.

Certified System™

ISO 9001
QMI-SAI Global

c UL US

ENERGY STAR

This product has been designed and manufactured to meet Energy Star® criteria for energy efficiency when matched with appropriate coil components. However, proper refrigerant charge and proper air flow are critical to achieve rated capacity and efficiency. Installation of this product should follow all manufacturing refrigerant charging and air flow instructions. **Failure to confirm proper charge and air flow may reduce energy efficiency and shorten equipment life.**

IdealHumidity

Comfort HEAT PUMP SYSTEM

STANDARD FEATURES

FEATURES	Unit Size – Voltage, Series			
	24–31	36–31	48–31	60–32
Puron Refrigerant	X	X	X	X
2 control wires to outdoor unit with Infinity Control (serial numbers 3112E and newer).	X	X	X	X
Maximum SEER Rating*	17.2	17.0	16.5	16.0
2–Stage Scroll Compressor	X	X	X	X
Louvered Coil Guard	X	X	X	X
Field Installed Filter Drier	X	X	X	X
Front Seating Service Valves	X	X	X	X
Internal Pressure Relief Valve	X	X	X	X
Long Line capability	X	X	X	X
Loss of Charge Switch	X	X	X	X
High Pressure Switch	X	X	X	X
Crankcase Heater	X	X	X	X
Low ambient cooling down to 0°F capability with Infinity Control	X	X	X	X
Utility Interface Connections	X	X	X	X
Enhanced Diagnostics with Infinity Control	X	X	X	X
Sound Blanket	X	X	X	X

X = Standard
* With approved combinations

PHYSICAL DATA

UNIT SIZE SERIES	24–31	36–31	48–31	60–32
Operating Weight lb (kg)	275 (125)	296 (134)	328 (149)	350 (159)
Shipping Weight lb (kg)	318 (144)	339 (154)	371 (168)	395 (179)
Compressor Type	Ultratech® Scroll			
REFRIGERANT	Puron® (R–410A)			
Control	TXV (Puron Hard Shutoff)			
Charge lb (kg)	13.07 (5.93)	13.70 (6.21)	13.73 (6.23)	14.78 (6.70)
Outdoor Htg Piston #	46	55	61	67
COND FAN	Propeller Type, Direct Drive			
Air Discharge	Vertical			
Air Qty (CFM)	3200	3200	4350	5000
Motor HP	1/12	1/12	1/4	1/4
Motor RPM	800	800	825	825
COND COIL				
Face Area (Sq ft)	25.2	25.2	25.2	30.18
Fins per In.	20	20	20	20
Rows	2	2	2	2
Circuits	8	8	8	10
VALVE CONNECT. (In. ID)				
Vapor	3/4	7/8	7/8	7/8
Liquid	3/8			
REFRIGERANT TUBES (In. OD)				
Rated Vapor*	3/4	7/8	1–1/8	1–1/8
Max Liquid Line	3/8			

* Units are rated with 25 ft (7.6 m) of lineset length. See Vapor Line Sizing and Cooling Capacity Loss table when using other sizes and lengths of lineset.

Note: See unit Installation Instruction for proper installation.

25HNB6

VAPOR LINE SIZING AND COOLING CAPACITY LOSS

Acceptable vapor line diameters provide adequate oil return to the compressor while avoiding excessive capacity loss. The suction line diameters shown in the chart below are acceptable for AC systems with Puron refrigerant:

Unit Nominal Size (Btuh)	Maximum Liquid Line Diameters (In. OD)	Vapor Line Diameters (In.) OD	Cooling Capacity Loss (%) Total Equivalent Line Length ft. (m)								
			Standard Application		Long Line Application Requires Accessories						
			26–50 (7.9–15.2)	51–80 (15.5–24.4)	81–100 (24.7–30.5)	101–125 (30.8–38.1)	126–150 (38.4–45.7)	151–175 (46.0–50.3)	176–200 (53.6–60.0)	201–225 (61.3–68.6)	226–250 (68.9–76.2)
24,000 2–Stage HP with Puron	3/8	5/8	0	1	1	2	3	3	4	4	5
		3/4	0	1	1	1	1	1	1	1	1
36,000 2–Stage HP with Puron	3/8	5/8	1	2	4	5	6	7	9	10	11
		3/4	0	0	1	1	2	2	3	3	4
		7/8	0	0	—	—	—	—	—	—	—
48,000 2–Stage HP with Puron	3/8	3/4	1	2	2	3	4	5	6	7	7
		7/8	0	1	1	2	2	2	3	3	4
		1–1/8	0	0	—	—	—	—	—	—	—
60,000 2–Stage HP with Puron	3/8	3/4	1	2	4	5	6	8	9	10	11
		7/8	0	1	2	2	3	4	4	5	5
		1–1/8	0	0	—	—	—	—	—	—	—

Standard Length = 80 ft. (24.4 m) or less total equivalent length

Applications in this area are long line. Accessories are required as shown recommended on Long Line Application Guidelines

Applications in this area may have height restrictions that limit allowable total equivalent length, when outdoor unit is below indoor unit.

— Applications in this area are not recommended due to insufficient oil return.

REFRIGERANT PIPING LENGTH LIMITATIONS

Maximum Line Lengths:

The maximum allowable total equivalent length for heat pumps varies depending on the vertical separation. See the tables below for allowable lengths depending on whether the outdoor unit is on the same level, above or below the outdoor unit.

Maximum Line Lengths for Heat Pump Applications

	MAXIMUM ACTUAL LENGTH ft (m)	MAXIMUM EQUIVALENT LENGTH† ft (m)	MAXIMUM VERTICAL SEPARATION ft (m)
Units on equal level	200 (61)	250 (76.2)	N/A
Outdoor unit ABOVE indoor unit	200 (61)	250 (76.2)	200 (61)
Outdoor unit BELOW indoor unit	See Table *'Maximum Total Equivalent Length: Outdoor Unit BELOW Indoor Unit'*		

† Total equivalent length accounts for losses due to elbows or fitting. See the Long Line Guideline for details.

25HNB6

Maximum Total Equivalent Length† - Outdoor Unit BELOW Indoor Unit

Size	Liquid Line Diameter w/ TXV	HP with Puron® Refrigerant – Maximum Total Equivalent Length† Vertical Separation ft (m) Outdoor unit BELOW indoor unit;						
		0 – 20 (0 – 6.1)	21 – 30 (6.4 – 9.1)	31 – 40 (9.4 – 12.2)	41 – 50 (12.5 – 15.2)	51 – 60 (15.5 – 18.3)	61 – 70 (18.6 – 21.3)	71 – 80 (21.6 – 24.4)
024 HP with Puron	3/8	250*	250*	250*	250*	250*	250*	250*
036 HP with Puron	3/8	250*	250*	250*	250*	250*	250*	250*
048 HP with Puron	3/8	250*	250*	250*	250*	230	160	– –
060 HP with Puron	3/8	250*	225*	190	150	110	– –	– –

*** Maximum actual length not to exceed 200 ft (61 m)**

† Total equivalent length accounts for losses due to elbows or fitting. See the Long Line Guideline for details.

– – = outside acceptable range

LONG LINE APPLICATIONS

An application is considered Long Line when the refrigerant level in the system requires the use of accessories to maintain acceptable refrigerant management for systems reliability. Defining a system as long line depends on the liquid line diameter, actual length of the tubing, and vertical separation between the indoor and outdoor units.

For Heat Pump systems, the chart below shows when an application is considered Long Line. Beyond these lengths, long line accessories are required:

HP WITH PURON® REFRIGERANT LONG LINE DESCRIPTION ft (m)
Beyond these lengths, long line accessories are required

Liquid Line Size	Units On Same Level	Outdoor Below Indoor	Outdoor Above Indoor
3/8	80 (24.4)	20 (6.1) vertical or 80 (24.4) total	80 (24.4)

Note: See Long Line Guideline for details

ACCESSORIES

KIT NUMBER	KIT NAME	24–31	36–31	48–31	60–32
KHALS0401LLS	SOLENOID VALVE	X	X	X	X
KHASS0606MPK*	SNOW STAND	X	X	X	X
KSAHS2501AAA†	HARD START KIT	X	X		
KSAHS2801AAA†	HARD START KIT			X	X
KSASF0101AAA	SUPPORT FEET	X	X	X	X

x = Accessory S = Standard

* Available from RCD

† Not backward compatible to previous series.

ACCESSORY CONTROLS

PART NO.	DESCRIPTION
SYSTXCCUID01-V	Infinity Control Deluxe 7-Day Programmable (Wall-mounted system control.)
SYSTXCCUIZ01-V	Infinity Control Deluxe Zoning 7-Day Programmable (Wall-mounted control for a multi-zone system.)
SYSTXCC4ZC01	Infinity 4-Zone Damper Control Module (Wall-mounted control for a four-zone system.)
SYSTXCCSMS01	Infinity Smart Sensor (Optional wall control used to monitor temperature and/or fan control in an individual zone.)
SYSTXCCRRS01	Infinity Remote Room Sensor (Monitors temperature in an individual zone.)
SYSTXCCRCT01 or SYSTXCCRWF01	Infinity System Access Module (Hardware for wireless access and control via internet.)
SYSTXCCNIM01	Infinity Network Interface Module (Connects Heat Recovery and Energy Recovery Ventilators on Non-zoning applications.)
SYSTXXXBPU01	Decorative Back Plate for Infinity Control (Decorative wall plate.)

ACCESSORY USAGE GUIDELINE

ACCESSORY	REQUIRED FOR LOW–AMBIENT COOLING APPLICATIONS (Below 55°F/12.8°C)	REQUIRED FOR LONG LINE APPLICATIONS* (Over 80 ft/24.38 m)	REQUIRED FOR SEA COAST APPLICATIONS (Within 2 miles/3.22 km)
Crankcase Heater	Standard	Standard	Standard
Evaporator Freeze Protection	Standard with Infinity™ Control (Low Ambient not allowed with non–communicating thermostat)	No	No
Liquid–Line Solenoid Valve	No	Yes	No
Low–Ambient Control	Standard with Infinity Control (Low ambient not allowed with non–communicating thermostat)	No	No
Puron Refrigerant Balance Port Hard–ShutOff TXV	Yes†	Yes†	Yes†
Support Feet	Recommended	No	Recommended
Winter Start Control	Standard with Infinity Control (Low Ambient not allowed with non–communicating thermostat)	No	No

* For tubing set lengths between 80 and 200 ft. (24.38 and 60.96 m) horizontal or 20 ft. (6.10 m) vertical differential (total equivalent length), refer to the Long Line Guideline—Air Conditioners and Heat Pumps using Puron® Refrigerant.

† Required on all indoor units. Standard on all new Puron refrigerant fan coils and furnace coils.

Accessory Description and Usage (Listed Alphabetically)

1. Compressor Start Assist - Capacitor and Relay

Start capacitor and relay gives a “hard” boost to compressor motor at each start up.

Usage Guideline:

Available if required by local codes.

2. Crankcase Heater

An electric resistance heater which mounts to the base of the compressor to keep the lubricant warm during off cycles. Improves compressor lubrication on restart and minimizes the chance of liquid slugging.

Usage Guideline:

Required in low ambient cooling applications.

Required in long line applications.

Suggested in all commercial applications.

3. Liquid-Line Solenoid Valve (LLS)

An electrically operated shutoff valve which stops and starts refrigerant liquid flow in response to compressor operation. It is to be installed at the outdoor unit to control refrigerant off cycle migration in the heating mode.

Usage Guideline:

An LLS is required in all long line heat pump applications to control refrigerant off cycle migration in the heating mode. See Long Line Guideline.

Suggested for all commercial applications.

4. Outdoor Air Temperature Sensor

Designed for use with Carrier Thermostats listed in this publication. This device enables the thermostat to display the outdoor temperature. This device also is required to enable special thermostat features such as auxiliary heat lock out.

Usage Guideline:

Suggested for all Carrier thermostats listed in this publication.

5. Snow Stand

Coated wire rack which supports unit 18 in. (457.2 mm) above mounting pad to allow for drainage from unit base.

Usage Guideline:

Suggested in the following applications:

Heat pump installations in heavy snowfall areas.

Heat pump installations in snow drift locations.

Heat pump installations in areas of prolonged subfreezing temperatures.

All commercial installations.

6. Thermostatic Expansion Valve (TXV) Bi-Flow

A modulating flow-control valve which meters refrigerant liquid flow rate into the evaporator in response to the superheat of the refrigerant gas leaving the evaporator.

Usage Guideline:

Accessory required to meet AHRI rating and system reliability, where indoor not equipped.

Required in all heat pump applications designed with Puron refrigerant.

ELECTRICAL DATA

UNIT SIZE–VOLTAGE, SERIES	V/PH	OPER VOLTS*		COMPR		FAN	MCA	MIN WIRE SIZE†	MIN WIRE SIZE†	MAX LENGTH ft (m)‡	MAX LENGTH ft (m)‡	MAX FUSE** or CKT BRK AMPS
		MAX	MIN	LRA	RLA	FLA		60°C	75°C	60°C	75°C	
24–31	208–230/1	253	197	58.3	12.5	0.6	16.2	14	14	48 (14.8)	46 (14.1)	25
36–31				83.0	18.5	0.6	23.7	12	12	52 (16.0)	50 (15.3)	40
48–31				104.0	22.8	1.3	29.8	10	10	67 (20.4)	63 (19.4)	50
60–32				152.9	28.8	1.5	37.5	8	8	82 (25.2)	78 (24.0)	60

* Permissible limits of the voltage range at which the unit will operate satisfactorily

† If wire is applied at ambient greater than 30°C, consult table 310–16 of the NEC (NFPA 70). The ampacity of non–metallic–sheathed cable (NM), trade name ROMEX, shall be that of 60°C conditions, per the NEC (NFPA 70) Article 336–26. If other than uncoated (no–plated), 60 or 75°C insulation, copper wire (solid wire for 10 AWG or smaller, stranded wire for larger than 10 AWG) is used, consult applicable tables of the NEC (NFPA 70).

‡ Length shown is as measured 1 way along wire path between unit and service panel for voltage drop not to exceed 2%.

** Time–Delay fuse.

FLA – Full Load Amps

LRA – Locked Rotor Amps

MCA – Minimum Circuit Amps

RLA – Rated Load Amps

NOTE: Control circuit is 24–V on all units and requires external power source. Copper wire must be used from service disconnect to unit.
All motors/compressors contain internal overload protection.

Complies with 2010 requirements of ASHRAE Standards 90.1

SOUND POWER LEVEL (dBA)

Unit Size – Voltage, Series	Standard Rating dBA	TYPICAL OCTAVE BAND SPECTRUM (dBA, without tone adjustment)						
		125	250	500	1000	2000	4000	8000
24–31	**68 – High Stage**	50.5	56.0	60.0	62.5	60.0	58.0	51.0
	67 – Low Stage	50.0	56.5	61.0	61.5	60.0	58.5	49.0
36–31	**70 – High Stage**	50.5	56.0	60.0	66.0	60.0	56.5	50.0
	68 – Low Stage	51.5	56.5	59.5	63.0	59.5	57.0	49.0
48–31	**70 – High Stage**	52.0	59.5	63.5	65.0	59.5	56.5	49.5
	69 – Low Stage	53.0	60.5	63.5	63.5	59.0	56.5	50.0
60–32	**71 – High Stage**	49.5	59.0	63.0	63.5	59.5	58.0	54.5
	71 – Low Stage	51.5	60.0	63.5	65.5	59.5	59.5	55.0

NOTE: Tested in compliance with AHRI 270–2008 but not listed with AHRI.

CHARGING SUBCOOLING (TXV-TYPE EXPANSION DEVICE)

UNIT SIZE–VOLTAGE, SERIES	REQUIRED SUBCOOLING °F (°C)
24–31	10 (5.6)
36–31	13 (7.2)
48–31	12 (6.7)
60–32	11 (6.1)

DIMENSIONS - ENGLISH

UNIT	SERIES	ELECTRICAL CHARACTERISTICS				A	B	C	D	E	F	G	K	L	M	N	P	OPERATING WEIGHT (lbs)	SHIPPING WEIGHT (lbs)	SHIPPING DIMENSIONS (L x W x H)
		208-230-1-60	208/230-3-60	460-3-60	575-3-60															
25HNB624A	1	X	O	O	O	35"	40 5/8"	3 3/4"	3/4"	6 9/16"	28 7/16"	9 1/8"	2 13/16"	1/2"	17 1/4"	18"	18"	275	318	36 1/8" X 39 1/4" X 46 1/8"
25HNB636A	1	X	O	O	O	35"	40 5/8"	3 7/8"	7/8"	6 9/16"	28 7/16"	9 1/8"	2 15/16"	5/8"	17"	18 1/2"	18 3/4"	296	339	36 1/8" X 39 1/4" X 46 1/8"
25HNB648A	1	X	O	O	O	35"	40 5/8"	3 7/8"	7/8"	6 9/16"	28 7/16"	9 1/8"	2 15/16"	5/8"	17 1/2"	18 1/4"	20"	328	371	36 1/8" X 39 1/4" X 46 1/8"
25HNB660A	2	X	O	O	O	35"	47 7/16"	3 7/8"	7/8"	6 9/16"	28 7/16"	9 1/8"	2 15/16"	5/8"	16 1/2"	17 1/8"	21"	350	395	36 1/8" X 39 1/4" X 51 13/16"

X = YES
O = NO

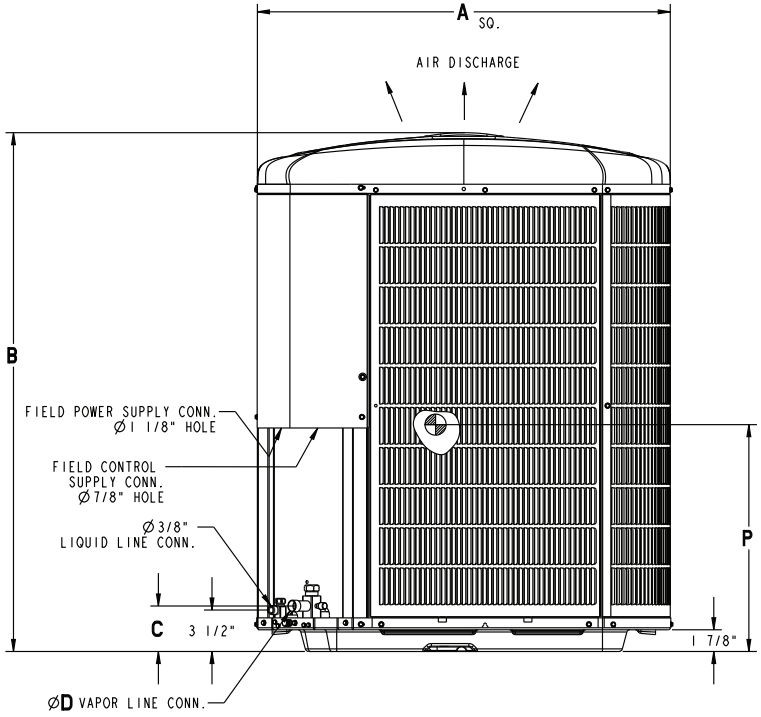

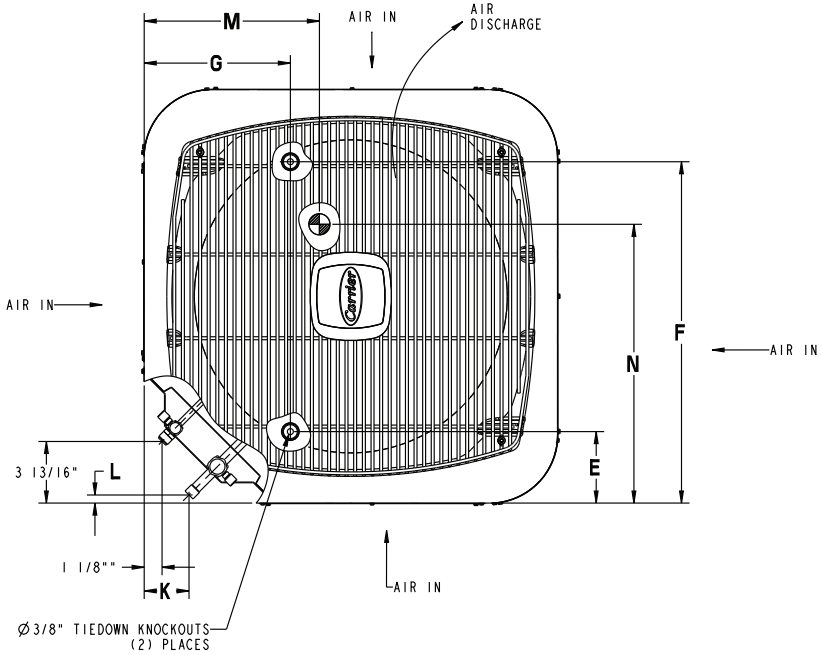

UNIT SIZE	MINIMUM MOUNTING PAD DIMENSIONS
-	31 1/2" X 31 1/2"
24,36,48,60	35" X 35"

DIMENSIONS - SI

UNIT	SERIES	ELECTRICAL CHARACTERISTICS				A	B	C	D	E	F	G	K	L	M	N	P	OPERATING WEIGHT (Kgs)	SHIPPING WEIGHT (Kgs)	SHIPPING DIMENSIONS (L x W x H)
25HNB624A	1	X	O	O	O	889.0	1032.6	95.6	19.1	166.1	722.8	231.3	70.9	12.8	438.2	457.2	457.2	124.7	144.2	917.7 X 997.7 X 1172.2
25HNB636A	1	X	O	O	O	889.0	1032.6	97.9	22.2	166.1	722.8	231.3	74.5	16.3	431.8	469.9	476.3	134.3	153.8	917.7 X 997.7 X 1172.2
25HNB648A	1	X	O	O	O	889.0	1032.6	97.9	22.2	166.1	722.8	231.3	74.5	16.3	444.5	463.6	508.0	148.8	168.3	917.7 X 997.7 X 1172.2
25HNB660A	2	X	O	O	O	889.0	1205.4	97.9	22.2	166.1	722.8	231.3	74.5	16.3	419.1	435.0	533.4	158.8	179.2	917.7 X 997.7 X 1315.7
		208-230-1-60	208/230-3-60	460-3-60	575-3-60															

X = YES
O = NO

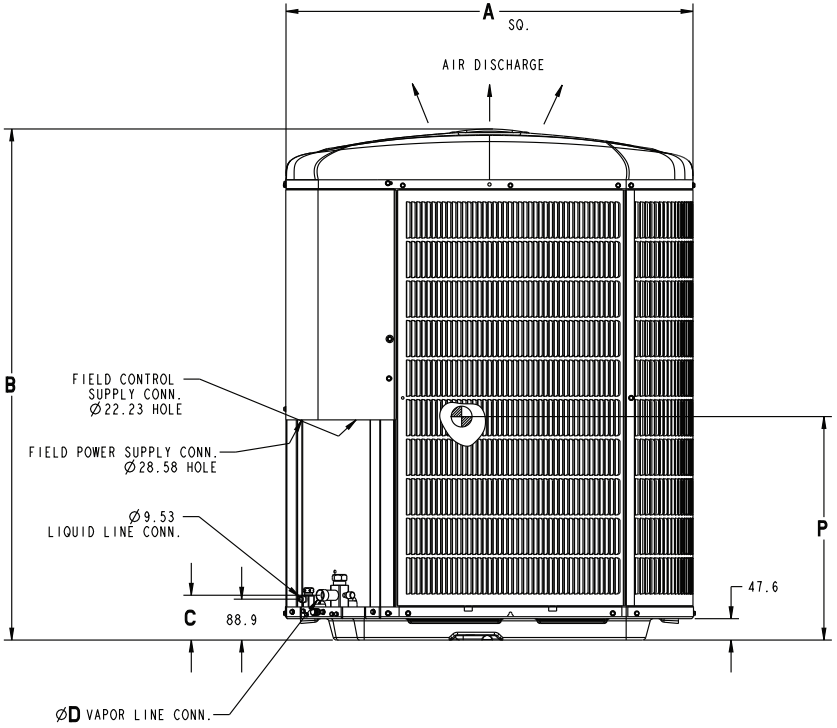

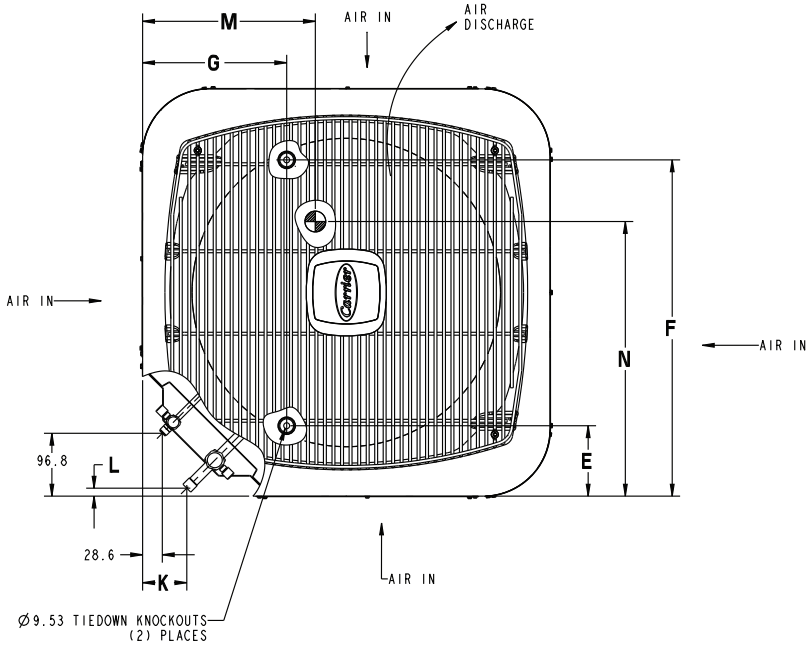

UNIT SIZE	MINIMUM MOUNTING PAD DIMENSIONS
-	800.1 X 800.1
24,36,48,60	889.0 X 889.0

25HNB6 BALANCE POINT WORKSHEET - HIGH STAGE

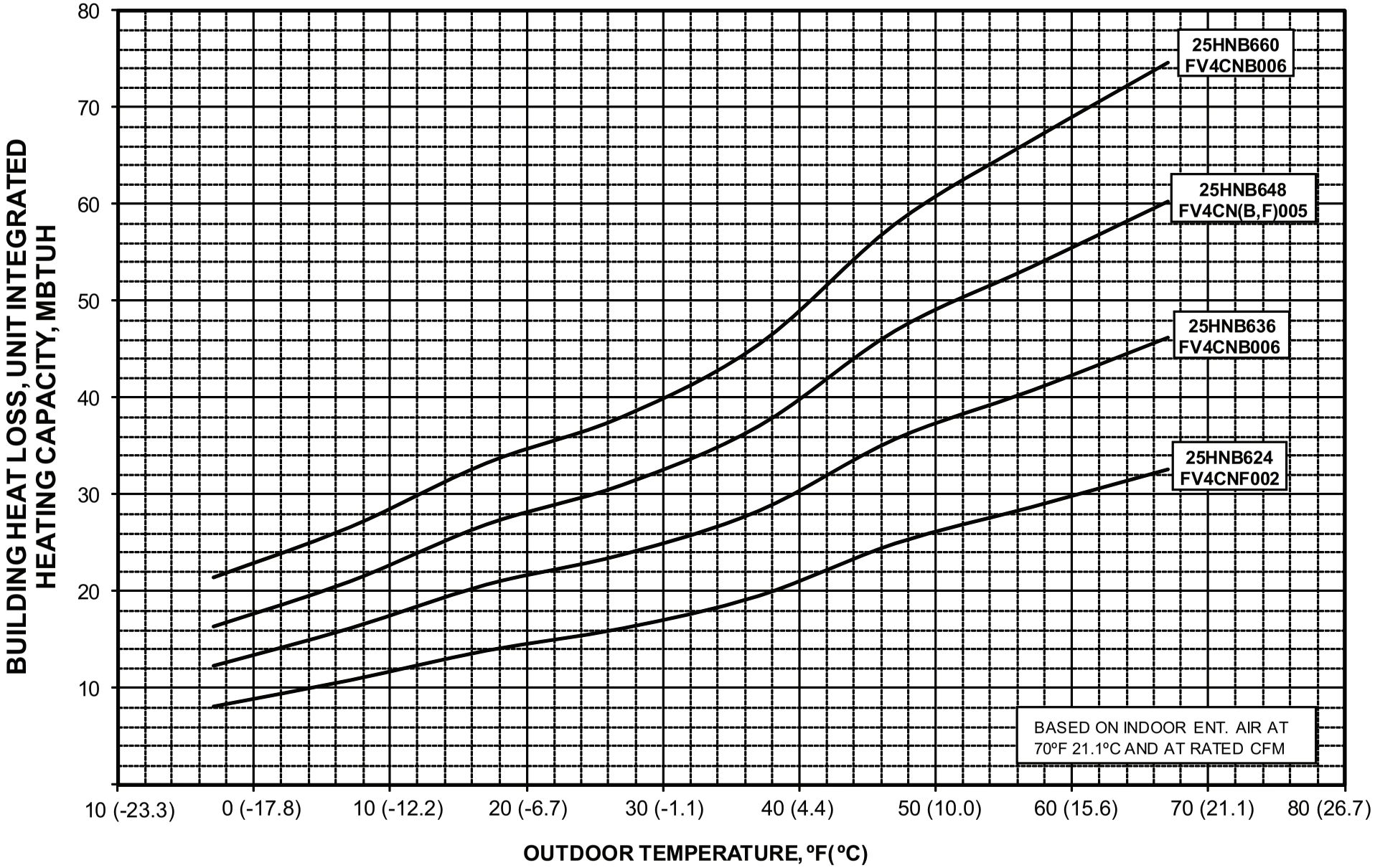

25HNB6 BALANCE POINT WORKSHEET - LOW STAGE

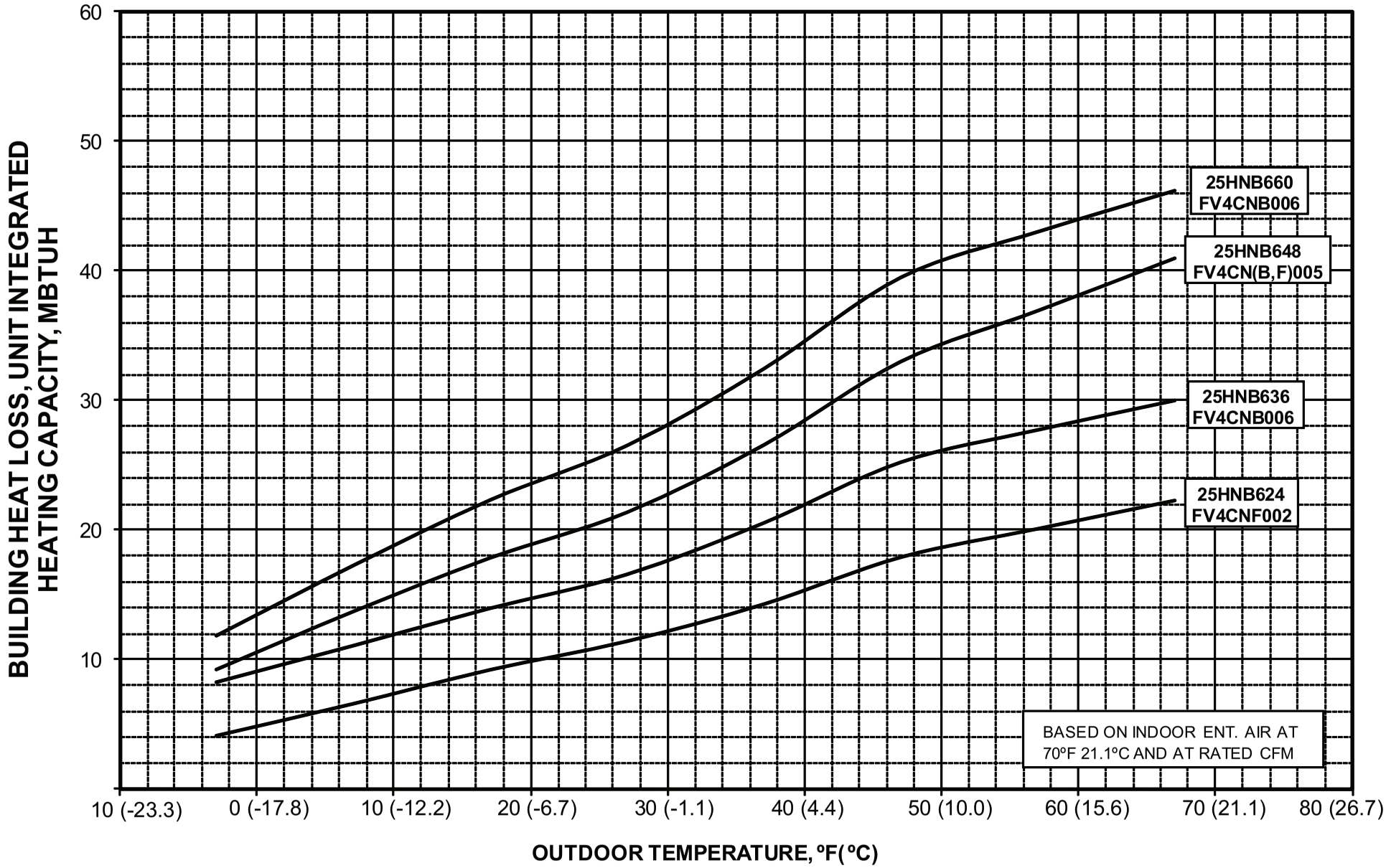

25HNB6

CLEARANCES

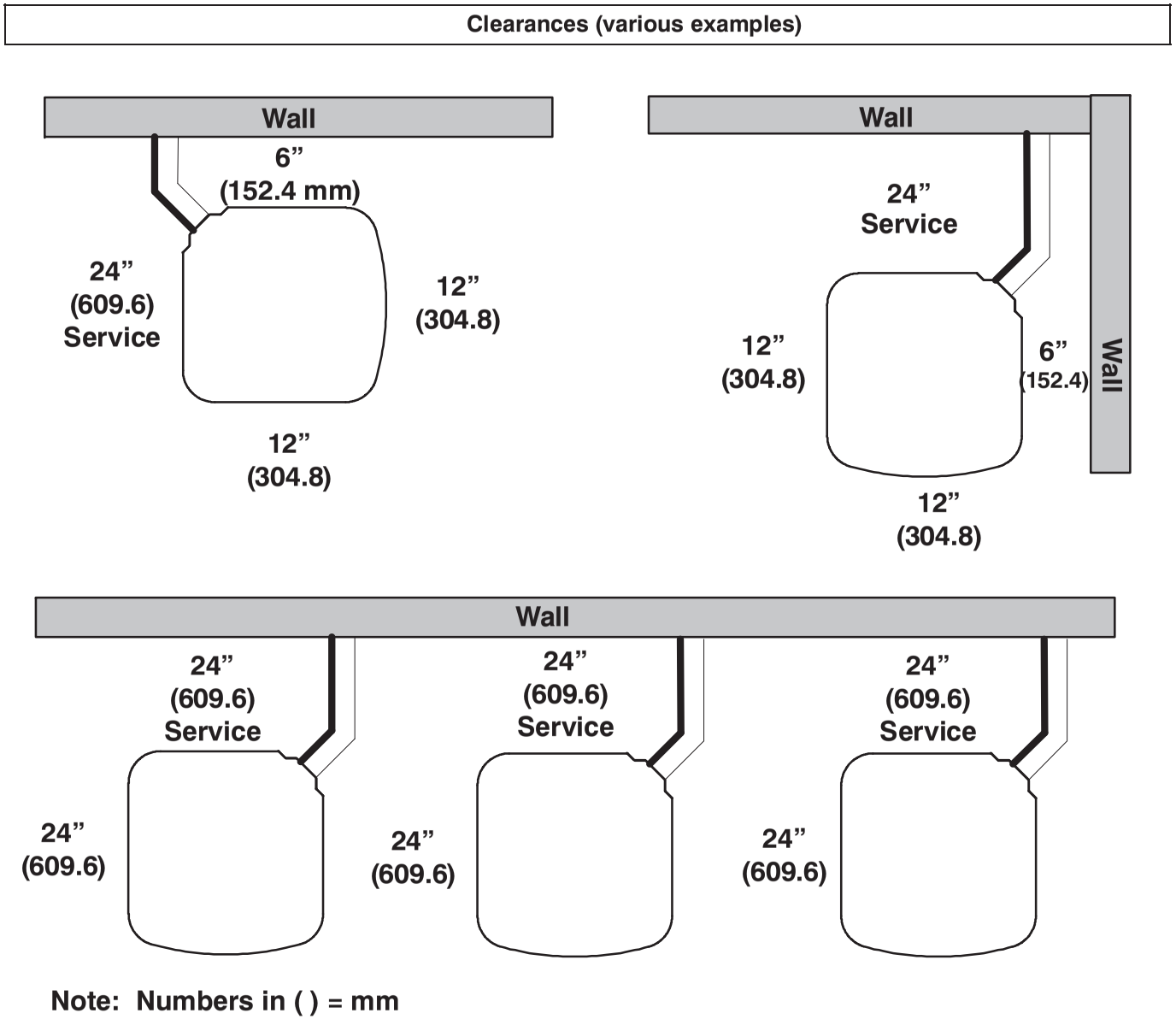

IMPORTANT: When installing multiple units in an alcove, roof well, or partially enclosed area, ensure there is adequate ventilation to prevent re-circulation of discharge air.

A07833

TESTED AHRI COMBINATION RATINGS*

NOTE: Ratings contained in this document are subject to change at any time.

For AHRI ratings certificates, please refer to the AHRI directory www.ahridirectory.org

Additional ratings and system combinations can be accessed via the Carrier database at: http://cactaxcredits.info/carrier-ratings/ac_ratings_srch.php

Equipment performance Calculator can be accessed at: http://rpmob.wrightsoft.com/

AHRI Ref. No.	Model Number	Coil Model Number	Furnace Model Number	Cooling Capacity	Cooling				Heating				
					EER	SEER	ID CFM		High Temp		HSPF	Low Temp	
							High	Low	Capacity 47°F (8°C)	COP		Capacity 17°F (−8°C)	COP
5476377	25HNB624A**31	FV4CNF002		24,000	13.0	17.0	700	560	25,000	3.90	9.0	15,300	2.74
5477252	25HNB636A**31	FV4CNB006		36,400	13.3	17.0	1050	840	35,800	4.06	9.5	22,600	3.00
5479354	25HNB648A**31	FV4CN(B,F)005		47,000	12.5	16.0	1400	1120	47,000	3.68	9.0	29,200	2.72
5481104	25HNB660A**32	FV4CNB006		56,500	12.5	16.0	1750	1400	58,000	3.72	9.0	36,000	2.76

* Ratings are net values reflecting the effects of circulating fan heat. Supplemental electric heat is not included. Ratings are based on:
Cooling Standard: 80°F (27°C) db 67°F (19°C) wb indoor entering air temperature and 95°F (35°C) db air entering outdoor unit.
High–Temp Heating Standard: 70°F (21°C) db indoor entering air temperature and 47°F (8°C) db 43°F (6°C) wb air entering outdoor unit.
Low–Temp Heating Standard: 70°F (21°C) db indoor entering air temperature and 17°F (–8°C) db 15°F (–9°C) wb air entering outdoor unit.
SEER — Seasonal Energy Efficiency Ratio
COP — Coefficient of Performance
HSPF — Heating Seasonal Performance Factor
EER — Energy Efficiency Ratio

DETAILED COOLING CAPACITIES#

EVAPORATOR AIR		CONDENSER ENTERING AIR TEMPERATURES °F (°C)																	
		75 (23.9)			85 (29.4)			95 (35)			105 (40.6)			115 (46.1)			125 (51.7)		
CFM	EWB °F (°C)	Capacity MBtuh†		Total System KW**	Capacity MBtuh†		Total System KW**	Capacity MBtuh†		Total System KW**	Capacity MBtuh†		Total System KW**	Capacity MBtuh†		Total System KW**	Capacity MBtuh†		Total System KW**
		Total	Sens‡		Total	Sens‡		Total	Sens‡		Total	Sens‡		Total	Sens‡		Total	Sens‡	
25HNB624A31 Outdoor Section With FV4CNF002 Indoor Section – HIGH**																			
600	57 (13.9)	22.47	22.47	1.42	21.26	21.26	1.60	20.00	20.00	1.81	18.69	18.69	2.06	17.34	17.34	2.35	15.96	15.96	2.72
	62 (16.7)	24.04	20.32	1.43	22.54	19.39	1.61	20.99	18.43	1.82	19.39	17.45	2.06	17.77	16.44	2.36	16.14	15.39	2.72
	63 (17.2)††	24.52	16.88	1.43	22.99	16.03	1.61	21.40	15.16	1.82	19.77	14.27	2.06	18.10	13.37	2.36	16.39	12.47	2.72
	67 (19.4)	26.60	17.58	1.44	24.94	16.71	1.62	23.23	15.82	1.83	21.47	14.92	2.07	19.68	14.02	2.37	17.86	13.10	2.73
	72 (22.2)	29.45	14.67	1.46	27.62	13.88	1.64	25.73	13.07	1.84	23.80	12.26	2.09	21.84	11.45	2.38	19.84	10.63	2.74
650	57 (13.9)	23.20	23.20	1.43	21.94	21.94	1.61	20.62	20.62	1.82	19.26	19.26	2.07	17.86	17.86	2.36	16.42	16.42	2.73
	62 (16.7)	24.52	21.24	1.44	22.98	20.27	1.62	21.39	19.27	1.82	19.75	18.25	2.07	18.11	17.18	2.37	16.46	16.46	2.73
	63 (17.2)††	25.01	17.53	1.44	23.43	16.66	1.62	21.79	15.76	1.83	20.11	14.85	2.07	18.40	13.93	2.37	16.65	13.00	2.73
	67 (19.4)	27.11	18.28	1.45	25.41	17.38	1.63	23.64	16.47	1.84	21.83	15.54	2.08	20.00	14.61	2.38	18.13	13.67	2.74
	72 (22.2)	30.01	15.16	1.47	28.12	14.35	1.65	26.17	13.52	1.85	24.19	12.70	2.10	22.17	11.86	2.39	20.13	11.01	2.74
700	57 (13.9)	23.88	23.88	1.44	22.56	22.56	1.62	21.20	21.20	1.83	19.78	19.78	2.08	18.33	18.33	2.37	16.84	16.84	2.74
	62 (16.7)	24.95	22.13	1.45	23.38	21.12	1.63	21.74	20.08	1.83	20.08	19.01	2.08	18.42	18.27	2.37	16.87	16.87	2.74
	63 (17.2)††	25.44	18.16	1.45	23.82	17.27	1.63	22.14	16.35	1.84	20.41	15.41	2.08	18.65	14.47	2.38	16.87	13.52	2.74
	67 (19.4)	27.57	18.95	1.46	25.81	18.03	1.64	24.00	17.09	1.85	22.15	16.14	2.09	20.27	15.19	2.39	18.36	14.23	2.74
	72 (22.2)	30.50	15.64	1.48	28.55	14.80	1.65	26.55	13.96	1.86	24.52	13.11	2.10	22.46	12.24	2.40	20.38	11.37	2.75
800	57 (13.9)	25.06	25.06	1.46	23.66	23.66	1.64	22.20	22.20	1.85	20.69	20.69	2.09	19.15	19.15	2.39	17.57	17.57	2.75
	62 (16.7)	25.69	23.81	1.46	24.06	22.72	1.64	22.38	21.57	1.85	20.73	20.73	2.10	19.18	19.18	2.39	17.60	17.60	2.75
	63 (17.2)††	26.15	19.37	1.47	24.45	18.44	1.65	22.69	17.47	1.85	20.90	16.49	2.10	19.08	15.51	2.39	17.23	14.51	2.75
	67 (19.4)	28.31	20.24	1.48	26.48	19.28	1.66	24.59	18.30	1.86	22.66	17.31	2.11	20.71	16.31	2.40	18.74	15.30	2.76
	72 (22.2)	31.29	16.52	1.49	29.26	15.64	1.67	27.18	14.75	1.87	25.08	13.85	2.12	22.94	12.95	2.41	20.79	12.04	2.77
25HNB624A31 Outdoor Section With FV4CNF002 Indoor Section – LOW**																			
480	57 (13.9)	17.40	17.40	1.02	16.19	16.19	1.19	14.92	14.92	1.39	13.64	13.64	1.62	12.37	12.37	1.89	11.13	11.13	2.20
	62 (16.7)	18.34	16.19	1.02	16.89	15.05	1.19	15.38	13.92	1.39	13.87	12.77	1.62	12.43	12.34	1.89	11.15	11.15	2.20
	63 (17.2)††	18.71	13.35	1.01	17.22	12.36	1.18	15.67	11.36	1.38	14.11	10.38	1.62	12.58	9.42	1.89	11.11	8.51	2.20
	67 (19.4)	20.36	13.94	1.00	18.74	12.92	1.17	17.07	11.90	1.37	15.40	10.90	1.60	13.77	9.91	1.88	12.20	8.98	2.19
	72 (22.2)	22.60	11.57	0.98	20.80	10.66	1.15	18.96	9.76	1.35	17.13	8.89	1.59	15.35	8.03	1.86	13.64	7.21	2.19
520	57 (13.9)	17.97	17.97	1.02	16.71	16.71	1.19	15.39	15.39	1.39	14.05	14.05	1.62	12.74	12.74	1.89	11.45	11.45	2.20
	62 (16.7)	18.72	16.93	1.02	17.22	15.75	1.19	15.68	14.56	1.39	14.15	13.34	1.62	12.76	12.76	1.89	11.47	11.47	2.20
	63 (17.2)††	19.08	13.89	1.01	17.54	12.86	1.19	15.95	11.83	1.39	14.35	10.82	1.62	12.79	9.83	1.89	11.28	8.88	2.20
	67 (19.4)	20.75	14.52	1.00	19.07	13.46	1.17	17.36	12.41	1.37	15.65	11.37	1.61	13.98	10.37	1.88	12.37	9.39	2.20
	72 (22.2)	23.02	11.97	0.98	21.16	11.04	1.15	19.27	10.11	1.35	17.40	9.21	1.59	15.58	8.32	1.87	13.83	7.48	2.19
560	57 (13.9)	18.49	18.49	1.02	17.17	17.17	1.19	15.81	15.81	1.39	14.43	14.43	1.62	13.07	13.07	1.89	11.74	11.74	2.21
	62 (16.7)	19.05	17.65	1.02	17.51	16.42	1.19	15.96	15.15	1.39	14.46	14.46	1.62	13.09	13.09	1.89	11.76	11.76	2.21
	63 (17.2)††	19.40	14.41	1.02	17.81	13.35	1.19	16.19	12.29	1.39	14.55	11.24	1.62	12.96	10.23	1.89	11.43	9.24	2.21
	67 (19.4)	21.08	15.07	1.00	19.37	13.99	1.17	17.61	12.90	1.37	15.87	11.83	1.61	14.16	10.80	1.88	12.52	9.80	2.20
	72 (22.2)	23.38	12.35	0.98	21.47	11.41	1.15	19.54	10.45	1.35	17.63	9.50	1.59	15.78	8.60	1.87	14.00	7.73	2.20
640	57 (13.9)	19.40	19.40	1.03	18.00	18.00	1.20	16.55	16.55	1.40	15.08	15.08	1.63	13.64	13.64	1.90	12.24	12.24	2.22
	62 (16.7)	19.63	18.98	1.03	18.07	17.96	1.20	16.57	16.57	1.40	15.11	15.11	1.63	13.67	13.67	1.90	12.26	12.26	2.22
	63 (17.2)††	19.92	15.40	1.03	18.26	14.29	1.20	16.58	13.16	1.40	14.89	12.06	1.63	13.25	10.97	1.91	11.67	9.93	2.22
	67 (19.4)	21.63	16.14	1.01	19.84	14.99	1.18	18.02	13.84	1.38	16.21	12.71	1.62	14.45	11.61	1.90	12.77	10.55	2.22
	72 (22.2)	23.96	13.07	0.99	21.98	12.06	1.16	19.98	11.05	1.36	18.01	10.06	1.60	16.09	9.12	1.88	14.25	8.22	2.21

See notes on pg. 17

DETAILED COOLING CAPACITIES# CONTINUED

EVAPORATOR AIR		CONDENSER ENTERING AIR TEMPERATURES °F (°C)																	
		75 (23.9)			85 (29.4)			95 (35)			105 (40.6)			115 (46.1)			125 (51.7)		
CFM	EWB °F (°C)	Capacity MBtuh†		Total System KW**	Capacity MBtuh†		Total System KW**	Capacity MBtuh†		Total System KW**	Capacity MBtuh†		Total System KW**	Capacity MBtuh†		Total System KW**	Capacity MBtuh†		Total System KW**
		Total	Sens‡		Total	Sens‡		Total	Sens‡		Total	Sens‡		Total	Sens‡		Total	Sens‡	
25HNB636A31 Outdoor Section With FV4CNB006 Indoor Section – HIGH**																			
900	57 (13.9)	33.59	33.59	2.10	32.13	32.13	2.36	30.60	30.60	2.67	28.98	28.98	3.03	27.24	27.24	3.44	25.34	25.34	3.90
	62 (16.7)	35.79	30.52	2.13	33.92	29.55	2.38	31.98	28.55	2.68	29.95	27.51	3.03	27.78	26.41	3.44	25.47	25.23	3.91
	63 (17.2)††	36.56	25.27	2.13	34.65	24.34	2.39	32.68	23.39	2.69	30.59	22.40	3.04	28.37	21.35	3.44	25.95	20.24	3.91
	67 (19.4)	39.56	26.24	2.16	37.50	25.30	2.41	35.38	24.34	2.71	33.12	23.34	3.06	30.72	22.28	3.47	28.13	21.16	3.93
	72 (22.2)	43.66	21.83	2.21	41.43	20.94	2.45	39.09	20.03	2.74	36.62	19.09	3.09	34.00	18.05	3.50	31.17	16.98	3.96
975	57 (13.9)	34.66	34.66	2.12	33.12	33.12	2.38	31.53	31.53	2.69	29.83	29.83	3.04	28.02	28.02	3.45	26.04	26.04	3.92
	62 (16.7)	36.45	31.93	2.14	34.52	30.93	2.39	32.54	29.91	2.69	30.44	28.83	3.05	28.25	27.68	3.45	26.08	26.08	3.92
	63 (17.2)††	37.23	26.25	2.15	35.26	25.31	2.40	33.22	24.33	2.70	31.07	23.32	3.05	28.78	22.25	3.46	26.30	21.12	3.92
	67 (19.4)	40.24	27.28	2.18	38.13	26.33	2.43	35.92	25.34	2.72	33.61	24.32	3.07	31.14	23.24	3.48	28.48	22.10	3.95
	72 (22.2)	44.40	22.51	2.22	42.08	21.60	2.46	39.68	20.67	2.76	37.15	19.70	3.10	34.44	18.66	3.51	31.56	17.58	3.98
1050	57 (13.9)	35.64	35.64	2.14	34.03	34.03	2.40	32.38	32.38	2.70	30.61	30.61	3.06	28.73	28.73	3.47	26.66	26.66	3.94
	62 (16.7)	37.04	33.31	2.16	35.06	32.28	2.41	33.03	31.22	2.71	30.91	30.11	3.06	28.77	28.77	3.47	26.70	26.70	3.94
	63 (17.2)††	37.80	27.21	2.16	35.78	26.24	2.41	33.69	25.26	2.71	31.48	24.22	3.07	29.13	23.13	3.47	26.60	21.97	3.94
	67 (19.4)	40.84	28.30	2.20	38.66	27.32	2.44	36.40	26.32	2.74	34.03	25.28	3.09	31.49	24.18	3.49	28.79	23.03	3.96
	72 (22.2)	45.03	23.16	2.24	42.65	22.24	2.48	40.20	21.29	2.77	37.60	20.30	3.12	34.83	19.26	3.52	31.88	18.16	3.99
1200	57 (13.9)	37.35	37.35	2.18	35.63	35.63	2.43	33.86	33.86	2.74	31.97	31.97	3.09	29.94	29.94	3.50	27.74	27.74	3.97
	62 (16.7)	38.04	35.95	2.19	36.01	34.85	2.44	33.95	33.86	2.74	32.02	32.02	3.09	29.98	29.98	3.50	27.78	27.78	3.97
	63 (17.2)††	38.75	29.06	2.19	36.63	28.06	2.44	34.43	27.03	2.74	32.13	25.96	3.09	29.69	24.84	3.50	27.07	23.64	3.96
	67 (19.4)	41.80	30.27	2.23	39.53	29.26	2.47	37.17	28.23	2.76	34.71	27.15	3.11	32.08	26.02	3.52	29.28	24.82	3.99
	72 (22.2)	46.06	24.41	2.27	43.58	23.47	2.51	41.01	22.49	2.80	38.32	21.48	3.15	35.44	20.41	3.55	32.39	19.28	4.02
25HNB636A31 Outdoor Section With FV4CNB006 Indoor Section – LOW**																			
720	57 (13.9)	25.97	25.97	1.44	24.13	24.13	1.73	22.32	22.32	2.06	20.47	20.47	2.46	18.58	18.58	2.93	16.64	16.64	3.49
	62 (16.7)	27.04	24.32	1.44	24.89	22.65	1.72	22.77	21.00	2.06	20.65	19.36	2.46	18.62	18.62	2.93	16.67	16.67	3.49
	63 (17.2)††	27.62	19.90	1.43	25.41	18.43	1.72	23.23	17.00	2.05	21.04	15.58	2.46	18.80	14.16	2.93	16.53	12.76	3.49
	67 (19.4)	30.03	20.80	1.41	27.65	19.26	1.70	25.29	17.79	2.04	22.92	16.32	2.44	20.50	14.87	2.91	18.05	13.43	3.47
	72 (22.2)	33.45	17.17	1.38	30.80	15.82	1.67	28.18	14.50	2.01	25.56	13.21	2.41	22.91	11.93	2.88	20.21	10.66	3.44
780	57 (13.9)	26.78	26.78	1.44	24.87	24.87	1.72	22.98	22.98	2.06	21.07	21.07	2.46	19.11	19.11	2.93	17.10	17.10	3.49
	62 (16.7)	27.53	25.51	1.44	25.33	23.77	1.72	23.18	22.04	2.06	21.11	21.11	2.46	19.14	19.14	2.93	17.13	17.13	3.49
	63 (17.2)††	28.09	20.73	1.43	25.83	19.21	1.72	23.59	17.73	2.06	21.34	16.26	2.46	19.06	14.80	2.94	16.73	13.35	3.50
	67 (19.4)	30.55	21.66	1.41	28.10	20.10	1.70	25.67	18.57	2.04	23.25	17.06	2.44	20.78	15.56	2.91	18.28	14.07	3.47
	72 (22.2)	34.02	17.75	1.39	31.29	16.36	1.68	28.60	15.01	2.02	25.92	13.69	2.42	23.21	12.37	2.89	20.45	11.08	3.44
840	57 (13.9)	27.53	27.53	1.44	25.56	25.56	1.72	23.60	23.60	2.06	21.61	21.61	2.46	19.59	19.59	2.93	17.51	17.51	3.49
	62 (16.7)	27.98	26.67	1.44	25.76	24.84	1.72	23.64	23.64	2.06	21.65	21.65	2.46	19.63	19.63	2.93	17.54	17.54	3.49
	63 (17.2)††	28.51	21.54	1.43	26.20	19.98	1.72	23.91	18.45	2.06	21.61	16.93	2.46	19.29	15.43	2.94	16.92	13.93	3.50
	67 (19.4)	31.00	22.53	1.41	28.48	20.92	1.70	26.01	19.34	2.04	23.53	17.78	2.44	21.02	16.24	2.92	18.47	14.70	3.47
	72 (22.2)	34.49	18.31	1.39	31.71	16.89	1.68	28.96	15.51	2.02	26.22	14.15	2.42	23.45	12.81	2.89	20.65	11.48	3.44
960	57 (13.9)	28.86	28.86	1.44	26.76	26.76	1.73	24.68	24.68	2.06	22.57	22.57	2.46	20.43	20.43	2.94	18.24	18.24	3.49
	62 (16.7)	28.91	28.91	1.44	26.80	26.80	1.73	24.72	24.72	2.06	22.61	22.61	2.46	20.47	20.47	2.94	18.27	18.27	3.49
	63 (17.2)††	29.20	23.11	1.44	26.80	21.46	1.73	24.44	19.85	2.07	22.06	18.24	2.47	19.67	16.65	2.95	17.25	15.06	3.51
	67 (19.4)	31.73	24.22	1.42	29.12	22.52	1.71	26.56	20.85	2.05	23.99	19.19	2.45	21.42	17.56	2.92	18.80	15.93	3.48
	72 (22.2)	35.28	19.40	1.39	32.39	17.92	1.68	29.55	16.47	2.02	26.71	15.05	2.42	23.87	13.65	2.90	20.98	12.26	3.45

See notes on pg. 17

DETAILED COOLING CAPACITIES# CONTINUED

EVAPORATOR AIR		CONDENSER ENTERING AIR TEMPERATURES °F (°C)																	
		75 (23.9)			85 (29.4)			95 (35)			105 (40.6)			115 (46.1)			125 (51.7)		
CFM	EWB °F (°C)	Capacity MBtuh†		Total System KW**	Capacity MBtuh†		Total System KW**	Capacity MBtuh†		Total System KW**	Capacity MBtuh†		Total System KW**	Capacity MBtuh†		Total System KW**	Capacity MBtuh†		Total System KW**
		Total	Sens‡		Total	Sens‡		Total	Sens‡		Total	Sens‡		Total	Sens‡		Total	Sens‡	
25HNB648A31 Outdoor Section With FV4CN(B,F)005 Indoor Section – HIGH**																			
1200	57 (13.9)	42.70	42.70	2.91	41.39	41.39	3.26	39.86	39.86	3.66	38.17	38.17	4.13	36.35	36.35	4.69	34.44	34.44	5.34
	62 (16.7)	45.46	39.41	2.92	43.68	38.56	3.27	41.63	37.58	3.67	39.40	36.53	4.14	37.07	35.41	4.69	34.69	34.21	5.35
	63 (17.2)††	46.41	32.56	2.93	44.59	31.70	3.28	42.48	30.72	3.68	40.18	29.67	4.15	37.76	28.58	4.70	35.25	27.48	5.35
	67 (19.4)	50.09	33.77	2.95	48.12	32.90	3.30	45.85	31.92	3.70	43.40	30.88	4.18	40.80	29.80	4.74	38.11	28.70	5.40
	72 (22.2)	55.10	27.96	2.98	52.90	27.06	3.33	50.43	26.08	3.74	47.76	25.04	4.22	44.93	23.95	4.78	41.99	22.85	5.45
1300	57 (13.9)	43.94	43.94	2.94	42.57	42.57	3.29	40.96	40.96	3.69	39.18	39.18	4.16	37.28	37.28	4.72	35.28	35.28	5.38
	62 (16.7)	46.21	41.13	2.95	44.38	40.25	3.30	42.26	39.25	3.70	39.98	38.15	4.17	37.61	36.96	4.72	35.34	35.34	5.38
	63 (17.2)††	47.15	33.75	2.96	45.26	32.87	3.31	43.09	31.87	3.71	40.71	30.81	4.18	38.22	29.71	4.73	35.64	28.59	5.38
	67 (19.4)	50.86	35.03	2.98	48.81	34.14	3.33	46.48	33.15	3.73	43.94	32.10	4.21	41.27	31.01	4.77	38.51	29.90	5.43
	72 (22.2)	55.89	28.74	3.00	53.62	27.84	3.36	51.07	26.84	3.77	48.32	25.79	4.25	45.41	24.70	4.81	42.39	23.58	5.48
1400	57 (13.9)	45.06	45.06	2.97	43.63	43.63	3.32	41.94	41.94	3.72	40.09	40.09	4.19	38.12	38.12	4.75	36.04	36.04	5.42
	62 (16.7)	46.88	42.78	2.98	44.98	41.87	3.33	42.83	40.84	3.73	40.51	39.67	4.20	38.18	38.18	4.75	36.09	36.09	5.42
	63 (17.2)††	47.79	34.89	2.98	45.84	34.00	3.33	43.60	32.99	3.73	41.16	31.92	4.20	38.61	30.81	4.76	35.98	29.67	5.41
	67 (19.4)	51.52	36.24	3.00	49.40	35.35	3.35	47.00	34.35	3.76	44.39	33.28	4.23	41.67	32.19	4.79	38.84	31.06	5.46
	72 (22.2)	56.57	29.50	3.03	54.24	28.58	3.38	51.61	27.58	3.79	48.79	26.52	4.27	45.81	25.41	4.84	42.73	24.30	5.51
1600	57 (13.9)	47.01	47.01	3.02	45.45	45.45	3.38	43.64	43.64	3.78	41.65	41.65	4.26	39.54	39.54	4.82	37.32	37.32	5.48
	62 (16.7)	48.00	45.88	3.03	46.04	44.90	3.38	43.86	43.45	3.78	41.71	41.71	4.26	39.60	39.60	4.82	37.36	37.36	5.49
	63 (17.2)††	48.82	37.08	3.03	46.76	36.17	3.38	44.42	35.15	3.79	41.88	34.05	4.26	39.24	32.91	4.81	36.51	31.74	5.47
	67 (19.4)	52.57	38.58	3.05	50.34	37.67	3.41	47.82	36.66	3.81	45.12	35.57	4.29	42.28	34.45	4.85	39.37	33.30	5.51
	72 (22.2)	57.65	30.93	3.08	55.20	30.01	3.43	52.47	28.99	3.85	49.53	27.91	4.33	46.44	26.80	4.90	43.25	25.67	5.57
25HNB648A31 Outdoor Section With FV4CN(B,F)005 Indoor Section – LOW**																			
960	57 (13.9)	33.65	33.65	1.99	30.83	30.83	2.34	27.95	27.95	2.75	25.05	25.05	3.21	22.16	22.16	3.75	19.33	19.33	4.36
	62 (16.7)	35.08	31.64	1.98	31.83	29.19	2.33	28.52	26.72	2.74	25.24	24.22	3.21	22.20	22.20	3.74	19.36	19.36	4.36
	63 (17.2)††	35.83	25.87	1.98	32.50	23.75	2.33	29.09	21.61	2.74	25.67	19.49	3.20	22.29	17.41	3.74	18.99	15.39	4.37
	67 (19.4)	38.99	27.02	1.95	35.42	24.85	2.30	31.77	22.66	2.71	28.12	20.50	3.18	24.49	18.37	3.72	20.96	16.30	4.34
	72 (22.2)	43.33	22.27	1.92	39.42	20.37	2.27	35.44	18.46	2.68	31.46	16.57	3.15	27.50	14.72	3.69	23.63	12.93	4.31
1040	57 (13.9)	34.67	34.67	2.00	31.75	31.75	2.35	28.77	28.77	2.75	25.77	25.77	3.21	22.79	22.79	3.75	19.87	19.87	4.37
	62 (16.7)	35.69	33.12	1.99	32.38	30.56	2.34	29.03	27.96	2.75	25.82	25.82	3.21	22.83	22.83	3.75	19.90	19.90	4.37
	63 (17.2)††	36.41	26.91	1.98	33.00	24.72	2.34	29.53	22.52	2.74	26.04	20.33	3.21	22.60	18.19	3.75	19.24	16.10	4.38
	67 (19.4)	39.61	28.13	1.96	35.95	25.88	2.31	32.23	23.63	2.72	28.49	21.39	3.19	24.81	19.20	3.73	21.21	17.07	4.35
	72 (22.2)	44.00	22.98	1.93	40.00	21.03	2.28	35.94	19.08	2.69	31.87	17.14	3.16	27.85	15.25	3.70	23.90	13.41	4.32
1120	57 (13.9)	35.59	35.59	2.00	32.58	32.58	2.35	29.51	29.51	2.75	26.43	26.43	3.22	23.36	23.36	3.76	20.35	20.35	4.38
	62 (16.7)	36.25	34.53	2.00	32.90	31.86	2.35	29.57	29.57	2.75	26.47	26.47	3.22	23.40	23.40	3.76	20.38	20.38	4.37
	63 (17.2)††	36.91	27.91	1.99	33.44	25.66	2.35	29.91	23.39	2.75	26.37	21.15	3.22	22.86	18.93	3.76	19.46	16.78	4.39
	67 (19.4)	40.13	29.21	1.97	36.41	26.89	2.32	32.62	24.57	2.73	28.82	22.27	3.20	25.08	20.01	3.74	21.43	17.81	4.36
	72 (22.2)	44.57	23.67	1.93	40.50	21.67	2.29	36.36	19.67	2.70	32.23	17.70	3.17	28.14	15.76	3.71	24.13	13.88	4.33
1280	57 (13.9)	37.21	37.21	2.01	34.04	34.04	2.36	30.81	30.81	2.77	27.57	27.57	3.23	24.35	24.35	3.77	21.18	21.18	4.39
	62 (16.7)	37.28	37.28	2.01	34.09	34.09	2.36	30.86	30.86	2.77	27.62	27.62	3.23	24.38	24.38	3.77	21.21	21.21	4.39
	63 (17.2)††	37.74	29.85	2.01	34.16	27.47	2.36	30.54	25.09	2.77	26.89	22.71	3.24	23.31	20.37	3.78	19.84	18.07	4.41
	67 (19.4)	40.98	31.28	1.98	37.14	28.84	2.34	33.25	26.39	2.75	29.36	23.96	3.22	25.52	21.56	3.76	21.80	19.22	4.38
	72 (22.2)	45.50	24.98	1.95	41.30	22.90	2.31	37.06	20.82	2.72	32.80	18.76	3.19	28.59	16.75	3.73	24.49	14.79	4.35

See notes on pg. 17

DETAILED COOLING CAPACITIES# CONTINUED

EVAPORATOR AIR		CONDENSER ENTERING AIR TEMPERATURES °F (°C)																	
		75 (23.9)			85 (29.4)			95 (35)			105 (40.6)			115 (46.1)			125 (51.7)		
CFM	EWB °F (°C)	Capacity MBtuh†		Total System KW**	Capacity MBtuh†		Total System KW**	Capacity MBtuh†		Total System KW**	Capacity MBtuh†		Total System KW**	Capacity MBtuh†		Total System KW**	Capacity MBtuh†		Total System KW**
		Total	Sens‡		Total	Sens‡		Total	Sens‡		Total	Sens‡		Total	Sens‡		Total	Sens‡	
25HNB660A32 Outdoor Section With FV4CNB006 Indoor Section – HIGH**																			
1500	57 (13.9)	51.61	51.61	3.56	49.90	49.90	3.94	48.10	48.10	4.37	46.09	46.09	4.87	43.74	43.74	5.44	40.97	40.97	6.09
	62 (16.7)	54.77	49.03	3.59	52.50	47.37	3.96	50.12	45.69	4.39	47.51	43.92	4.88	44.55	42.00	5.45	41.19	39.81	6.09
	63 (17.2)††	55.96	40.39	3.60	53.60	38.83	3.97	51.15	37.26	4.40	48.45	35.61	4.89	45.37	33.84	5.46	41.83	31.92	6.10
	67 (19.4)	60.55	41.97	3.65	57.92	40.35	4.01	55.18	38.71	4.44	52.18	37.01	4.93	48.79	35.19	5.50	44.94	33.24	6.14
	72 (22.2)	66.85	34.72	3.71	63.83	33.13	4.07	60.69	31.53	4.49	57.28	29.87	4.99	53.46	28.12	5.55	49.17	26.24	6.19
1625	57 (13.9)	53.11	53.11	3.61	51.30	51.30	3.98	49.40	49.40	4.41	47.27	47.27	4.91	44.79	44.79	5.49	41.89	41.89	6.14
	62 (16.7)	55.69	51.18	3.64	53.31	49.45	4.00	50.86	47.70	4.43	48.17	45.86	4.92	45.16	43.80	5.49	41.95	41.95	6.14
	63 (17.2)††	56.85	41.87	3.65	54.40	40.27	4.01	51.85	38.66	4.44	49.04	36.96	4.93	45.87	35.16	5.50	42.23	33.19	6.14
	67 (19.4)	61.48	43.55	3.69	58.74	41.88	4.05	55.90	40.20	4.48	52.79	38.46	4.97	49.30	36.60	5.54	45.33	34.61	6.18
	72 (22.2)	67.83	35.71	3.75	64.70	34.08	4.11	61.44	32.45	4.54	57.91	30.76	5.03	53.98	28.97	5.59	49.57	27.06	6.23
1750	57 (13.9)	54.46	54.46	3.66	52.57	52.57	4.03	50.56	50.56	4.46	48.32	48.32	4.96	45.73	45.73	5.53	42.70	42.70	6.18
	62 (16.7)	56.48	53.25	3.68	54.04	51.45	4.04	51.52	49.63	4.47	48.77	47.65	4.96	45.80	45.80	5.53	42.76	42.76	6.19
	63 (17.2)††	57.62	43.31	3.69	55.08	41.67	4.05	52.43	40.01	4.48	49.55	38.28	4.97	46.29	36.43	5.54	42.57	34.43	6.18
	67 (19.4)	62.27	45.08	3.73	59.45	43.37	4.10	56.50	41.65	4.52	53.30	39.87	5.01	49.72	37.98	5.58	45.66	35.94	6.22
	72 (22.2)	68.68	36.66	3.80	65.44	35.01	4.16	62.06	33.34	4.58	58.44	31.62	5.07	54.40	29.80	5.63	49.90	27.87	6.27
2000	57 (13.9)	56.83	56.83	3.75	54.75	54.75	4.12	52.55	52.55	4.55	50.11	50.11	5.05	47.32	47.32	5.62	44.06	44.06	6.27
	62 (16.7)	57.84	57.13	3.76	55.30	55.14	4.12	52.69	52.60	4.55	50.18	50.18	5.05	47.37	47.37	5.62	44.11	44.11	6.27
	63 (17.2)††	58.85	46.05	3.77	56.15	44.33	4.13	53.37	42.61	4.56	50.34	40.81	5.05	46.95	38.88	5.62	43.11	36.80	6.26
	67 (19.4)	63.55	48.03	3.81	60.55	46.24	4.18	57.45	44.45	4.60	54.09	42.59	5.09	50.35	40.62	5.66	46.16	38.50	6.30
	72 (22.2)	70.02	38.47	3.88	66.60	36.76	4.24	63.06	35.04	4.66	59.25	33.26	5.15	55.05	31.39	5.71	50.39	29.42	6.35
25HNB660A32 Outdoor Section With FV4CNB006 Indoor Section – LOW**																			
1200	57 (13.9)	41.27	41.27	2.45	36.79	36.79	2.83	32.29	32.29	3.27	27.87	27.87	3.78	23.62	23.62	4.35	19.59	19.59	5.01
	62 (16.7)	42.97	39.35	2.43	37.92	36.10	2.82	32.87	32.82	3.27	28.01	27.79	3.78	23.66	23.66	4.35	19.62	19.62	5.01
	63 (17.2)††	43.88	32.14	2.43	38.70	29.32	2.82	33.52	26.49	3.26	28.48	23.70	3.77	23.68	21.00	4.35	19.20	18.40	5.02
	67 (19.4)	47.49	33.46	2.40	41.89	30.56	2.79	36.33	27.67	3.24	30.92	24.82	3.75	25.76	22.04	4.33	20.94	19.38	4.99
	72 (22.2)	52.45	27.41	2.36	46.29	24.87	2.75	40.20	22.34	3.20	34.27	19.86	3.71	28.63	17.46	4.29	23.33	15.17	4.95
1300	57 (13.9)	42.46	42.46	2.45	37.83	37.83	2.84	33.17	33.17	3.28	28.61	28.61	3.79	24.22	24.22	4.36	20.06	20.06	5.02
	62 (16.7)	43.67	41.17	2.45	38.51	37.77	2.84	33.41	34.32	3.28	28.66	28.66	3.79	24.26	24.26	4.36	20.09	20.09	5.02
	63 (17.2)††	44.54	33.40	2.44	39.25	30.50	2.83	33.97	27.58	3.28	28.84	24.71	3.79	23.96	21.92	4.37	19.40	19.23	5.03
	67 (19.4)	48.17	34.81	2.41	42.46	31.82	2.80	36.79	28.84	3.25	31.28	25.89	3.76	26.04	23.03	4.34	21.15	20.28	5.00
	72 (22.2)	53.17	28.25	2.37	46.90	25.66	2.76	40.68	23.07	3.21	34.65	20.53	3.72	28.91	18.07	4.30	23.53	15.72	4.97
1400	57 (13.9)	43.54	43.54	2.46	38.76	38.76	2.85	33.97	33.97	3.29	29.28	29.28	3.80	24.76	24.76	4.38	20.49	20.49	5.03
	62 (16.7)	44.29	42.90	2.46	39.07	39.35	2.85	34.02	34.02	3.29	29.32	29.32	3.80	24.80	24.80	4.38	20.52	20.52	5.03
	63 (17.2)††	45.11	34.63	2.45	39.72	31.64	2.84	34.35	28.64	3.29	29.15	25.69	3.80	24.19	22.80	4.38	19.59	20.03	5.05
	67 (19.4)	48.75	36.12	2.42	42.95	33.05	2.81	37.18	29.97	3.26	31.59	26.94	3.77	26.28	24.00	4.36	21.33	21.15	5.02
	72 (22.2)	53.79	29.08	2.38	47.41	26.42	2.77	41.08	23.77	3.22	34.97	21.18	3.74	29.15	18.67	4.32	23.71	16.27	4.98
1600	57 (13.9)	45.41	45.41	2.48	40.37	40.37	2.87	35.34	35.34	3.31	30.42	30.42	3.82	25.69	25.69	4.40	21.22	21.22	5.06
	62 (16.7)	45.49	45.49	2.48	40.43	40.43	2.87	35.39	35.39	3.31	30.46	30.46	3.82	25.72	25.72	4.40	21.24	21.24	5.06
	63 (17.2)††	46.03	37.00	2.48	40.48	33.85	2.87	34.98	30.69	3.32	29.64	27.56	3.83	24.58	24.51	4.42	19.90	21.53	5.08
	67 (19.4)	49.70	38.66	2.45	43.72	35.42	2.84	37.82	32.17	3.29	32.09	28.97	3.80	26.67	25.85	4.39	21.63	22.81	5.05
	72 (22.2)	54.77	30.65	2.41	48.21	27.89	2.80	41.73	25.13	3.25	35.47	22.44	3.76	29.52	19.83	4.35	23.96	17.33	5.01

† Total and sensible capacities are net capacities. Blower motor heat has been subtracted.

‡ Sensible capacities shown are based on 80°F (27°C) entering air at the indoor coil. For sensible capacities at other than 80°F (27°C), deduct 835 Btuh (245 kW) per 1000 CFM (480 L/S) of indoor coil air for each degree below 80°F (27°C), or add 835 Btuh (245 kW) per 1000 CFM (480 L/S) of indoor coil air per degree above 80°F (27°C).

** System kw is total of indoor and outdoor unit kilowatts.

†† At TVA rating indoor condition (75°F edb/63°F ewb). All other indoor air temperatures are at 80°F edb.

Detailed cooling capacities are based on indoor and outdoor unit at the same elevation per AHRI standard 210/240–08. If additional tubing length and/or indoor unit is located above outdoor unit, a slight variation in capacity may occur.

NOTE: When the required data falls between the published data, interpolation may be performed. Extrapolation is not an acceptable practice.

EWB — Entering Wet Bulb

HEAT PUMP HEATING PERFORMANCE

INDOOR AIR		OUTDOOR COIL ENTERING AIR TEMPERATURES ° F (° C)																							
		–3 (–19.4)			7 (–13.9)			17 (–8.3)			27 (–2.8)			37 (2.8)			47 (8.3)			57 (13.9)			67 (19.4)		
EDB ° F (° C)	CFM	Capacity MBtuh		Total Sys. KW†	Capacity MBtuh		Total Sys. KW†	Capacity MBtuh		Total Sys. KW†	Capacity MBtuh		Total Sys. KW†	Capacity MBtuh		Total Sys. KW†	Capacity MBtuh		Total Sys-tem KW†	Capacity MBtuh		Total Sys. KW†	Capacity MBtuh		Total Sys. KW†
		Total	Integ*		Total	Integ*		Total	Integ*		Total	Integ*		Total	Integ*		Total	Integ*		Total	Integ*		Total	Integ*	
25HNB624A31 Outdoor Section With FV4CNF002 Indoor Section – HIGH**																									
65 (18.3)	600	9.13	8.40	1.36	12.06	11.08	1.47	15.38	14.02	1.60	18.36	16.30	1.73	21.55	19.61	1.88	24.98	24.98	2.06	28.66	28.66	2.27	32.46	32.46	2.53
	650	9.21	8.47	1.36	12.17	11.18	1.46	15.50	14.13	1.58	18.52	16.45	1.71	21.78	19.82	1.86	25.25	25.25	2.03	28.99	28.99	2.23	32.87	32.87	2.47
	700	9.29	8.54	1.35	12.28	11.29	1.45	15.61	14.23	1.57	18.67	16.58	1.69	21.97	19.99	1.83	25.50	25.50	2.00	29.29	29.29	2.19	33.22	33.22	2.43
	800	9.42	8.67	1.35	12.47	11.46	1.44	15.79	14.40	1.55	18.92	16.80	1.67	22.30	20.29	1.80	25.92	25.92	1.95	29.78	29.78	2.14	33.75	33.75	2.36
70 (21.1)	600	8.73	8.03	1.43	11.61	10.67	1.54	15.05	13.72	1.67	17.97	15.96	1.81	21.11	19.21	1.96	24.49	24.49	2.15	28.12	28.12	2.37	31.91	31.91	2.64
	650	8.81	8.10	1.43	11.73	10.78	1.53	15.18	13.84	1.66	18.14	16.11	1.79	21.33	19.41	1.94	24.76	24.76	2.11	28.44	28.44	2.32	32.28	32.28	2.57
	700	8.89	8.18	1.42	11.85	10.89	1.52	15.29	13.94	1.64	18.29	16.24	1.77	21.53	19.59	1.91	25.00	25.00	2.08	28.74	28.74	2.28	32.62	32.62	2.53
	800	9.04	8.32	1.42	12.04	11.06	1.51	15.48	14.11	1.62	18.54	16.46	1.74	21.85	19.88	1.88	25.40	25.40	2.04	29.21	29.21	2.22	33.15	33.15	2.46
75 (23.9)	600	8.26	7.60	1.50	11.14	10.23	1.61	14.66	13.37	1.75	17.59	15.62	1.89	20.68	18.81	2.05	24.01	24.01	2.24	27.59	27.59	2.46	31.35	31.35	2.75
	650	8.34	7.67	1.49	11.25	10.34	1.60	14.81	13.50	1.73	17.75	15.76	1.86	20.89	19.01	2.02	24.27	24.27	2.20	27.90	27.90	2.41	31.71	31.71	2.68
	700	8.43	7.76	1.49	11.37	10.45	1.59	14.93	13.61	1.72	17.90	15.89	1.85	21.07	19.18	1.99	24.50	24.50	2.17	28.19	28.19	2.37	32.03	32.03	2.63
	800	8.59	7.90	1.49	11.57	10.63	1.58	15.14	13.80	1.70	18.14	16.11	1.82	21.39	19.47	1.96	24.89	24.89	2.12	28.66	28.66	2.31	32.55	32.55	2.56
25HNB624A31 Outdoor Section With FV4CNF002 Indoor Section – LOW**																									
65 (18.3)	480	4.29	3.94	1.03	7.46	6.85	1.14	10.33	9.42	1.23	13.01	11.56	1.31	15.75	14.33	1.39	17.90	17.90	1.47	20.02	20.02	1.55	22.13	22.13	1.66
	520	4.33	3.98	1.03	7.54	6.93	1.13	10.48	9.55	1.22	13.24	11.76	1.29	15.95	14.52	1.37	18.14	18.14	1.44	20.30	20.30	1.51	22.46	22.46	1.61
	560	4.38	4.03	1.03	7.66	7.04	1.13	10.61	9.67	1.21	13.47	11.96	1.28	16.13	14.68	1.35	18.36	18.36	1.41	20.57	20.57	1.48	22.77	22.77	1.57
	640	4.48	4.12	1.04	7.82	7.18	1.13	10.81	9.86	1.20	14.03	12.46	1.27	16.42	14.94	1.32	18.73	18.73	1.38	21.02	21.02	1.44	23.29	23.29	1.51
70 (21.1)	480	4.36	4.01	1.11	6.96	6.40	1.20	9.80	8.94	1.29	12.46	11.07	1.37	15.34	13.96	1.46	17.45	17.45	1.54	19.56	19.56	1.63	21.66	21.66	1.74
	520	4.41	4.06	1.11	7.07	6.50	1.20	9.96	9.08	1.28	12.66	11.25	1.36	15.53	14.13	1.44	17.69	17.69	1.51	19.84	19.84	1.59	21.98	21.98	1.69
	560	4.47	4.12	1.11	7.17	6.59	1.19	10.10	9.21	1.27	12.84	11.41	1.35	15.69	14.28	1.42	17.90	17.90	1.48	20.09	20.09	1.56	22.27	22.27	1.65
	640	4.59	4.22	1.12	7.35	6.75	1.19	10.34	9.43	1.27	13.16	11.69	1.33	16.00	14.56	1.40	18.27	18.27	1.45	20.52	20.52	1.51	22.77	22.77	1.59
75 (23.9)	480	4.10	3.77	1.18	6.39	5.87	1.26	9.23	8.41	1.35	11.89	10.56	1.44	14.87	13.53	1.53	17.02	17.02	1.61	19.10	19.10	1.71	21.20	21.20	1.83
	520	4.17	3.84	1.18	6.49	5.96	1.26	9.39	8.56	1.35	12.09	10.73	1.42	15.08	13.72	1.51	17.24	17.24	1.58	19.37	19.37	1.67	21.50	21.50	1.78
	560	4.24	3.90	1.18	6.59	6.06	1.26	9.53	8.69	1.34	12.26	10.89	1.41	15.27	13.89	1.49	17.44	17.44	1.56	19.61	19.61	1.64	21.78	21.78	1.74
	640	4.37	4.02	1.19	6.78	6.23	1.26	9.76	8.90	1.33	12.60	11.19	1.40	15.56	14.16	1.47	17.80	17.80	1.52	20.03	20.03	1.59	22.26	22.26	1.68

See notes on pg. 21

HEAT PUMP HEATING PERFORMANCE CONTINUED

INDOOR AIR		OUTDOOR COIL ENTERING AIR TEMPERATURES ° F (° C)																							
		–3 (–19.4)			7 (–13.9)			17 (–8.3)			27 (–2.8)			37 (2.8)			47 (8.3)			57 (13.9)			67 (19.4)		
EDB ° F (° C)	CFM	Capacity MBtuh		Total Sys. KW†	Capacity MBtuh		Total Sys. KW†	Capacity MBtuh		Total Sys. KW†	Capacity MBtuh		Total Sys. KW†	Capacity MBtuh		Total Sys. KW†	Capacity MBtuh		Total Sys-tem KW†	Capacity MBtuh		Total Sys. KW†	Capacity MBtuh		Total Sys. KW†
		Total	Integ*		Total	Integ*		Total	Integ*		Total	Integ*		Total	Integ*		Total	Integ*		Total	Integ*		Total	Integ*	
25HNB636A31 Outdoor Section With FV4CNB006 Indoor Section – HIGH**																									
65 (18.3)	900	13.75	12.65	1.90	17.91	16.46	2.01	22.88	20.87	2.15	26.93	23.92	2.28	31.23	28.42	2.42	35.79	35.79	2.60	40.74	40.74	2.81	46.22	46.22	3.03
	975	13.88	12.77	1.90	18.06	16.60	2.00	23.03	21.00	2.13	27.11	24.08	2.25	31.46	28.63	2.38	36.10	36.10	2.55	41.16	41.16	2.75	46.68	46.68	2.94
	1050	13.99	12.87	1.90	18.20	16.72	1.99	23.16	21.12	2.11	27.27	24.22	2.22	31.66	28.81	2.35	36.37	36.37	2.51	41.52	41.52	2.71	46.97	46.97	2.88
	1200	14.18	13.05	1.89	18.44	16.94	1.98	23.36	21.30	2.09	27.54	24.46	2.19	32.02	29.14	2.31	36.81	36.81	2.46	42.09	42.09	2.61	47.10	47.10	2.79
70 (21.1)	900	13.21	12.15	2.00	17.38	15.97	2.11	21.98	20.04	2.25	26.55	23.58	2.39	30.75	27.99	2.54	35.23	35.23	2.72	40.04	40.04	2.93	45.39	45.39	3.18
	975	13.33	12.26	1.99	17.52	16.10	2.10	22.62	20.63	2.24	26.72	23.73	2.36	30.98	28.19	2.50	35.54	35.54	2.67	40.45	40.45	2.87	45.96	45.96	3.08
	1050	13.44	12.36	1.99	17.66	16.23	2.09	22.76	20.75	2.22	26.87	23.86	2.34	31.18	28.38	2.47	35.80	35.80	2.63	40.80	40.80	2.83	46.28	46.28	3.01
	1200	13.63	12.54	1.99	17.89	16.44	2.08	22.99	20.96	2.20	27.13	24.09	2.30	31.52	28.69	2.42	36.23	36.23	2.57	41.38	41.38	2.73	46.54	46.54	2.92
75 (23.9)	900	12.66	11.65	2.10	16.83	15.47	2.22	21.26	19.38	2.35	26.16	23.24	2.52	30.29	27.56	2.67	34.68	34.68	2.85	39.35	39.35	3.07	44.58	44.58	3.33
	975	12.77	11.75	2.09	16.98	15.60	2.21	21.45	19.56	2.33	26.31	23.37	2.48	30.51	27.76	2.63	34.98	34.98	2.80	39.75	39.75	3.01	45.14	45.14	3.22
	1050	12.88	11.85	2.09	17.11	15.72	2.20	21.63	19.72	2.32	26.46	23.50	2.46	30.70	27.94	2.59	35.24	35.24	2.76	40.09	40.09	2.96	45.55	45.55	3.15
	1200	13.05	12.01	2.09	17.31	15.91	2.19	21.92	19.98	2.30	26.72	23.73	2.42	31.04	28.24	2.55	35.66	35.66	2.70	40.65	40.65	2.88	45.91	45.91	3.05
25HNB636A31 Outdoor Section With FV4CNB006 Indoor Section – LOW**																									
65 (18.3)	720	9.56	8.80	1.68	12.50	11.49	1.68	15.65	14.27	1.69	18.88	16.77	1.70	22.67	20.63	1.75	25.24	25.24	1.79	27.66	27.66	1.83	29.86	29.86	1.90
	780	9.69	8.91	1.68	12.65	11.62	1.67	15.82	14.42	1.67	19.08	16.95	1.69	22.85	20.80	1.73	25.45	25.45	1.75	27.93	27.93	1.79	30.18	30.18	1.84
	840	9.80	9.01	1.68	12.78	11.74	1.67	15.97	14.56	1.66	19.26	17.11	1.67	23.02	20.95	1.70	25.64	25.64	1.72	28.16	28.16	1.75	30.46	30.46	1.80
	960	9.97	9.17	1.68	13.00	11.94	1.66	16.23	14.80	1.65	19.57	17.38	1.65	23.28	21.19	1.67	25.95	25.95	1.67	28.55	28.55	1.69	30.92	30.92	1.72
70 (21.1)	720	8.75	8.05	1.75	11.78	10.83	1.75	14.99	13.67	1.76	18.26	16.22	1.79	21.73	19.77	1.83	24.82	24.82	1.88	27.20	27.20	1.94	29.37	29.37	2.00
	780	8.86	8.15	1.75	11.92	10.96	1.74	15.16	13.82	1.75	18.47	16.41	1.77	22.39	20.38	1.82	25.02	25.02	1.85	27.46	27.46	1.89	29.68	29.68	1.95
	840	8.96	8.25	1.75	12.05	11.07	1.74	15.30	13.95	1.74	18.65	16.56	1.75	22.56	20.53	1.79	25.20	25.20	1.81	27.69	27.69	1.85	29.95	29.95	1.90
	960	9.14	8.41	1.75	12.26	11.27	1.73	15.56	14.18	1.73	18.93	16.81	1.73	22.84	20.79	1.76	25.51	25.51	1.77	28.07	28.07	1.79	30.41	30.41	1.82
75 (23.9)	720	7.89	7.26	1.82	11.03	10.14	1.83	14.31	13.05	1.84	17.64	15.67	1.87	20.94	19.06	1.92	24.42	24.42	1.99	26.74	26.74	2.04	28.85	28.85	2.11
	780	7.99	7.35	1.82	11.17	10.26	1.82	14.47	13.20	1.83	17.84	15.84	1.86	21.19	19.29	1.89	24.62	24.62	1.95	26.99	26.99	1.99	29.17	29.17	2.05
	840	8.09	7.44	1.82	11.29	10.37	1.82	14.62	13.33	1.82	18.01	16.00	1.84	21.44	19.51	1.87	24.79	24.79	1.92	27.22	27.22	1.95	29.44	29.44	2.00
	960	8.25	7.59	1.82	11.44	10.51	1.81	14.82	13.51	1.81	18.25	16.21	1.82	21.76	19.80	1.83	25.07	25.07	1.86	27.59	27.59	1.89	29.89	29.89	1.93

See notes on pg. 21

HEAT PUMP HEATING PERFORMANCE CONTINUED

INDOOR AIR		OUTDOOR COIL ENTERING AIR TEMPERATURES °F (°C)																							
		−3 (−19.4)			7 (−13.9)			17 (−8.3)			27 (−2.8)			37 (2.8)			47 (8.3)			57 (13.9)			67 (19.4)		
EDB °F (°C)	CFM	Capacity MBtuh		Total Sys. KW†	Capacity MBtuh		Total Sys. KW†	Capacity MBtuh		Total Sys. KW†	Capacity MBtuh		Total Sys. KW†	Capacity MBtuh		Total Sys. KW†	Capacity MBtuh		Total Sys-tem KW†	Capacity MBtuh		Total Sys. KW†	Capacity MBtuh		Total Sys. KW†
		Total	Integ*		Total	Integ*		Total	Integ*		Total	Integ*		Total	Integ*		Total	Integ*		Total	Integ*		Total	Integ*	
25HNB648A31 Outdoor Section With FV4CN(B,F)005 Indoor Section — HIGH**																									
65 (18.3)	1200	17.97	16.53	2.66	23.15	21.27	2.84	29.65	27.03	3.08	35.05	31.13	3.29	40.86	37.19	3.54	47.00	47.00	3.82	53.46	53.46	4.15	60.50	60.50	4.46
	1300	18.06	16.61	2.65	23.28	21.39	2.83	29.83	27.19	3.06	35.29	31.35	3.27	41.21	37.50	3.50	47.42	47.42	3.77	54.04	54.04	4.07	60.92	60.92	4.37
	1400	18.16	16.70	2.65	23.41	21.51	2.83	29.97	27.33	3.04	35.51	31.53	3.25	41.51	37.77	3.48	47.81	47.81	3.74	54.58	54.58	4.01	61.21	61.21	4.31
	1600	18.34	16.88	2.66	23.67	21.75	2.83	30.22	27.56	3.03	35.87	31.86	3.22	42.01	38.23	3.45	48.45	48.45	3.69	55.23	55.23	3.92	61.47	61.47	4.22
70 (21.1)	1200	17.65	16.24	2.82	22.65	20.81	3.00	29.20	26.63	3.23	34.52	30.66	3.45	40.17	36.56	3.69	46.20	46.20	3.98	52.55	52.55	4.32	59.63	59.63	4.65
	1300	17.75	16.33	2.82	22.80	20.95	2.99	29.41	26.81	3.21	34.77	30.88	3.42	40.52	36.87	3.66	46.62	46.62	3.93	53.06	53.06	4.25	60.01	60.01	4.56
	1400	17.87	16.44	2.82	22.97	21.10	2.99	29.59	26.98	3.20	34.99	31.08	3.40	40.82	37.15	3.63	47.00	47.00	3.90	53.59	53.59	4.18	60.34	60.34	4.49
	1600	18.11	16.66	2.83	23.27	21.38	2.99	29.91	27.27	3.19	35.38	31.42	3.38	41.34	37.62	3.60	47.64	47.64	3.85	54.36	54.36	4.09	60.66	60.66	4.39
75 (23.9)	1200	17.13	15.76	2.99	22.03	20.25	3.16	27.68	25.23	3.36	33.94	30.15	3.61	39.48	35.93	3.86	45.41	45.41	4.16	51.70	51.70	4.51	58.75	58.75	4.85
	1300	17.26	15.88	2.99	22.20	20.40	3.15	27.91	25.45	3.34	34.20	30.37	3.58	39.82	36.23	3.82	45.82	45.82	4.11	52.16	52.16	4.44	59.15	59.15	4.75
	1400	17.40	16.01	2.99	22.38	20.57	3.14	28.16	25.67	3.33	34.43	30.58	3.56	40.12	36.51	3.79	46.19	46.19	4.07	52.61	52.61	4.37	59.46	59.46	4.68
	1600	17.67	16.25	3.00	22.71	20.87	3.15	28.66	26.13	3.33	34.84	30.94	3.54	40.64	36.98	3.76	46.82	46.82	4.01	53.46	53.46	4.27	59.84	59.84	4.58
25HNB648A31 Outdoor Section With FV4CN(B,F)005 Indoor Section — LOW**																									
65 (18.3)	960	10.75	9.89	2.21	15.52	14.27	2.28	20.06	18.29	2.35	24.42	21.69	2.42	29.36	26.71	2.53	33.07	33.07	2.61	36.89	36.89	2.72	40.84	40.84	2.87
	1040	10.91	10.03	2.22	15.72	14.45	2.28	20.30	18.50	2.34	24.72	21.96	2.40	29.61	26.94	2.49	33.39	33.39	2.57	37.30	37.30	2.67	41.32	41.32	2.80
	1120	11.03	10.15	2.22	15.89	14.60	2.28	20.50	18.69	2.33	24.98	22.18	2.39	29.85	27.16	2.47	33.67	33.67	2.53	37.64	37.64	2.62	41.76	41.76	2.73
	1280	11.26	10.36	2.23	16.19	14.88	2.28	20.85	19.01	2.32	25.43	22.58	2.36	30.22	27.50	2.43	34.15	34.15	2.48	38.21	38.21	2.55	42.41	42.41	2.62
70 (21.1)	960	9.82	9.03	2.31	14.61	13.43	2.39	19.16	17.47	2.46	23.53	20.89	2.54	28.66	26.08	2.66	32.39	32.39	2.75	36.17	36.17	2.87	40.06	40.06	3.02
	1040	9.96	9.16	2.31	14.79	13.59	2.38	19.39	17.68	2.45	23.82	21.16	2.52	28.96	26.35	2.62	32.72	32.72	2.71	36.57	36.57	2.81	40.53	40.53	2.95
	1120	10.08	9.28	2.32	14.97	13.75	2.38	19.61	17.88	2.44	24.08	21.39	2.50	29.21	26.58	2.60	33.00	33.00	2.67	36.91	36.91	2.76	40.95	40.95	2.89
	1280	10.31	9.48	2.33	15.26	14.02	2.39	19.97	18.21	2.43	24.53	21.78	2.48	29.61	26.95	2.56	33.48	33.48	2.61	37.49	37.49	2.69	41.68	41.68	2.77
75 (23.9)	960	9.86	9.07	2.43	13.59	12.49	2.49	18.18	16.58	2.57	22.58	20.06	2.66	27.03	24.60	2.76	31.72	31.72	2.89	35.43	35.43	3.01	39.28	39.28	3.17
	1040	9.99	9.19	2.44	13.77	12.66	2.49	18.41	16.78	2.56	22.88	20.32	2.64	27.47	25.00	2.73	32.04	32.04	2.85	35.82	35.82	2.96	39.74	39.74	3.10
	1120	9.77	8.99	2.44	13.94	12.81	2.49	18.63	16.99	2.56	23.13	20.55	2.62	27.91	25.40	2.71	32.32	32.32	2.81	36.17	36.17	2.91	40.16	40.16	3.04
	1280	9.98	9.18	2.45	14.24	13.08	2.50	18.99	17.32	2.55	23.58	20.94	2.60	28.92	26.32	2.69	32.79	32.79	2.76	36.74	36.74	2.84	40.87	40.87	2.94

See notes on pg. 21

HEAT PUMP HEATING PERFORMANCE CONTINUED

INDOOR AIR		OUTDOOR COIL ENTERING AIR TEMPERATURES ° F (° C)																							
		−3 (−19.4)			7 (−13.9)			17 (−8.3)			27 (−2.8)			37 (2.8)			47 (8.3)			57 (13.9)			67 (19.4)		
EDB ° F (° C)	CFM	Capacity MBtuh		Total Sys. KW†	Capacity MBtuh		Total Sys. KW†	Capacity MBtuh		Total Sys. KW†	Capacity MBtuh		Total Sys. KW†	Capacity MBtuh		Total Sys. KW†	Capacity MBtuh		Total Sys-tem KW†	Capacity MBtuh		Total Sys. KW†	Capacity MBtuh		Total Sys. KW†
		Total	Integ*		Total	Integ*		Total	Integ*		Total	Integ*		Total	Integ*		Total	Integ*		Total	Integ*		Total	Integ*	
25HNB660A32 Outdoor Section With FV4CNB006 Indoor Section – HIGH**																									
65 (18.3)	1500	23.79	21.88	3.26	29.29	26.92	3.46	36.45	33.23	3.72	42.81	38.02	3.97	50.01	45.51	4.27	57.93	57.93	4.63	66.85	66.85	4.98	75.37	75.37	5.43
	1625	24.02	22.09	3.27	29.54	27.14	3.46	36.69	33.45	3.71	43.07	38.25	3.95	50.33	45.80	4.24	58.31	58.31	4.58	67.16	67.16	4.91	75.53	75.53	5.33
	1750	24.26	22.32	3.28	29.79	27.38	3.47	36.89	33.63	3.70	43.31	38.47	3.94	50.62	46.07	4.22	58.70	58.70	4.53	67.40	67.40	4.86	75.47	75.47	5.25
	2000	24.72	22.74	3.32	30.26	27.80	3.49	37.26	33.97	3.71	43.75	38.86	3.93	51.14	46.53	4.20	59.34	59.34	4.47	67.57	67.57	4.79	72.61	72.61	5.06
70 (21.1)	1500	22.84	21.01	3.40	28.50	26.19	3.61	36.04	32.86	3.88	42.34	37.61	4.15	49.45	45.00	4.46	57.25	57.25	4.83	66.02	66.02	5.19	74.43	74.43	5.65
	1625	23.07	21.22	3.41	28.74	26.41	3.61	36.27	33.07	3.87	42.61	37.84	4.13	49.77	45.29	4.43	57.63	57.63	4.78	66.38	66.38	5.11	74.67	74.67	5.55
	1750	23.30	21.44	3.42	28.99	26.64	3.62	36.48	33.26	3.87	42.85	38.06	4.11	50.06	45.55	4.40	58.00	58.00	4.74	66.64	66.64	5.06	74.68	74.68	5.47
	2000	23.75	21.85	3.46	29.44	27.06	3.64	36.85	33.60	3.88	43.28	38.44	4.11	50.57	46.02	4.38	58.68	58.68	4.67	66.90	66.90	4.99	72.84	72.84	5.30
75 (23.9)	1500	21.87	20.12	3.54	27.71	25.46	3.76	34.56	31.51	4.03	41.89	37.21	4.34	48.89	44.49	4.66	56.55	56.55	5.03	65.16	65.16	5.40	73.45	73.45	5.88
	1625	22.08	20.32	3.55	27.94	25.67	3.77	34.84	31.76	4.02	42.15	37.43	4.31	49.21	44.78	4.62	56.94	56.94	4.98	65.56	65.56	5.33	73.74	73.74	5.78
	1750	22.32	20.53	3.57	28.18	25.90	3.77	35.20	32.09	4.02	42.39	37.65	4.30	49.50	45.05	4.60	57.30	57.30	4.94	65.85	65.85	5.27	73.83	73.83	5.70
	2000	22.75	20.93	3.60	28.63	26.31	3.80	36.40	33.19	4.05	42.82	38.03	4.29	50.01	45.51	4.57	57.99	57.99	4.87	66.19	66.19	5.20	72.85	72.85	5.55
25HNB660A32 Outdoor Section With FV4CNB006 Indoor Section – LOW**																									
65 (18.3)	1200	13.69	12.59	2.67	19.50	17.92	2.75	25.04	22.83	2.84	30.30	26.91	2.94	35.80	32.58	3.07	39.55	39.55	3.18	42.98	42.98	3.30	46.15	46.15	3.40
	1300	13.81	12.71	2.68	19.67	18.08	2.75	25.29	23.05	2.83	30.62	27.19	2.92	36.10	32.85	3.04	39.97	39.97	3.13	43.47	43.47	3.24	46.62	46.62	3.32
	1400	13.95	12.83	2.69	19.87	18.26	2.75	25.53	23.27	2.83	30.92	27.46	2.90	36.39	33.11	3.01	40.32	40.32	3.09	43.89	43.89	3.19	47.03	47.03	3.26
	1600	14.22	13.08	2.71	20.21	18.57	2.77	25.94	23.65	2.82	31.45	27.93	2.89	36.86	33.54	2.97	40.89	40.89	3.04	44.64	44.64	3.10	47.64	47.64	3.18
70 (21.1)	1200	12.56	11.56	2.79	18.42	16.93	2.87	23.98	21.87	2.97	29.23	25.96	3.07	35.00	31.85	3.22	38.74	38.74	3.33	42.09	42.09	3.46	45.24	45.24	3.57
	1300	12.73	11.72	2.80	18.60	17.09	2.87	24.24	22.10	2.96	29.55	26.25	3.05	35.36	32.17	3.19	39.13	39.13	3.29	42.58	42.58	3.40	45.78	45.78	3.49
	1400	12.89	11.86	2.81	18.80	17.28	2.88	24.50	22.33	2.96	29.87	26.53	3.04	35.67	32.46	3.16	39.50	39.50	3.25	43.01	43.01	3.35	46.18	46.18	3.43
	1600	13.13	12.08	2.83	19.16	17.61	2.89	24.93	22.73	2.95	30.41	27.01	3.02	36.13	32.88	3.12	40.09	40.09	3.20	43.75	43.75	3.27	46.81	46.81	3.34
75 (23.9)	1200	12.10	11.14	2.92	17.17	15.78	3.00	22.80	20.79	3.10	28.07	24.93	3.21	33.24	30.25	3.34	37.87	37.87	3.50	41.18	41.18	3.63	44.31	44.31	3.75
	1300	12.28	11.30	2.93	17.37	15.96	3.00	23.05	21.02	3.09	28.41	25.23	3.19	33.69	30.66	3.31	38.28	38.28	3.45	41.66	41.66	3.57	44.86	44.86	3.66
	1400	12.44	11.44	2.94	17.58	16.15	3.00	23.32	21.26	3.09	28.73	25.51	3.18	34.38	31.28	3.30	38.63	38.63	3.41	42.08	42.08	3.52	45.31	45.31	3.60
	1600	11.89	10.94	2.95	17.95	16.50	3.02	23.79	21.69	3.09	29.27	25.99	3.16	35.34	32.16	3.28	39.23	39.23	3.36	42.79	42.79	3.45	45.96	45.96	3.51

NOTE: When the required data falls between the published data, interpolation may be performed. Extrapolation is not an acceptable practice.
‡ The Btuh heating capacity values shown are net integrated values from which the defrost effect has been subtracted. The Btuh heating from supplement heaters should be added to those values to obtain total system capacity.
† The kW values include the compressor, outdoor fan motor, and indoor blower motor. The kW from supplement heaters should be added to these values to obtain total system kilowatts.
EDB — Entering Dry Bulb

GUIDE SPECIFICATIONS
GENERAL

System Description

Outdoor-mounted, air-cooled, split-system heat pump unit suitable for ground or rooftop installation. Unit consists of a hermetic compressor, an air-cooled coil, forward-swept blade propeller-type condenser fan, and a control box. Unit will discharge supply air upward as shown on contract drawings. Unit will be used in a refrigeration circuit to match up to a packaged fan coil or coil unit.

Quality Assurance

— Unit will be rated in accordance with the latest edition of AHRI Standard 240.

— Unit will be certified for capacity and efficiency, and listed in the latest AHRI directory.

— Unit construction will comply with latest edition of ASHRAE and with NEC.

— Unit will be constructed in accordance with UL standards and will carry the UL label of approval. Unit will have C-UL approval.

— Unit cabinet will be capable of withstanding Federal Test Method Standard No. 141 (Method 6061) 500-hr salt spray test.

— Air-cooled condenser coils are pressure tested and the outdoor units are leak tested.

— Unit constructed in ISO9001 approved facility.

Delivery, Storage, and Handling

— Unit will be shipped as single package only and is stored and handled per unit manufacturer's recommendations.

Warranty (for inclusion by specifying engineer)

— U.S. and Canada only.

PRODUCTS

Equipment

— Factory-assembled, single-piece, air-cooled heat pump unit. Contained within the unit enclosure is all factory wiring, piping, controls, compressor, refrigerant charge Puron® (R-410A) refrigerant, and special features required prior to field start-up.

Unit Cabinet

— Unit cabinet will be constructed of galvanized steel, bonderized, and coated with a powder coat paint.

Fans

— Condenser fan will be direct-drive propeller type, forward swept blade, discharging air upward.

— Condenser fan motors will be totally enclosed, 1-phase type with class B insulation and permanently lubricated.

— Shafts will be corrosion resistant.

— Fan blades will be statically and dynamically balanced.

— Condenser fan openings will be equipped with coated steel wire safety guards.

Compressor

— Compressor will be hermetically sealed.

— Compressor will be mounted on rubber vibration isolators.

— Compressor will be covered with a sound absorbing blanket.

Condenser Coil

— Condenser coil will be air cooled.

— Coil will be constructed of aluminum fins mechanically bonded to copper tubes which are then cleaned, dehydrated, and sealed.

Refrigeration Components

— Refrigeration circuit components will include liquid-line back-seating shutoff valve with sweat connections, vapor-line back-seating shutoff valve with sweat connections, system charge of Puron® (R-410A) refrigerant, POE compressor oil, accumulator, and reversing valve.

— Unit will be equipped with high-pressure switch, loss-of-charge switch, and filter drier for Puron® refrigerant.

Operating Characteristics

— The capacity of the unit will meet or exceed _____ Btuh at a suction temperature of _____ °F (°C). The power consumption at full load will not exceed _____ kW.

— Combination of the unit and the evaporator or fan coil unit will have a total net cooling capacity of _____ Btuh or greater at conditions of _____ CFM entering air temperature at the evaporator at _____ °F (°C) wet bulb and _____ °F (°C) dry bulb, and air entering the unit at _____ °F (°C).

— The system will have a SEER of _____ Btuh/watt or greater at DOE conditions.

Electrical Requirements

— Nominal unit electrical characteristics will be _____ v, single phase, 60 hz. The unit will be capable of satisfactory operation within voltage limits of _____ v to _____ v.

— Unit electrical power will be single point connection.

— Control circuit will be 24v.

Special Features

— Refer to section of this literature identifying accessories and descriptions for specific features and available enhancements.

SYSTEM DESIGN SUMMARY

1. Intended for outdoor installation with free air inlet and outlet. Outdoor fan external static pressure available is less than 0.01-in. wc.
2. This product is qualified for low ambient cooling operation (below 55°F / 12.8°C) with an Infinity User Interface **ONLY**.
3. The maximum outdoor operating ambient in cooling mode is 125°F (51.67°C) when operating voltage is 230v. For 208v applications, the maximum outdoor ambient is 120°F (48.9°C).
4. Minimum outdoor operating air temperature for heating mode is –20°F (–28.9°C).
5. Maximum outdoor operating air temperature for heating mode is 66°F (18.9°C).
6. For reliable operation, unit should be level in all horizontal planes.
7. For interconnecting refrigerant tube lengths greater than 80 ft (23.4 m) and/or elevation differences between indoor and outdoor units greater than 20 ft (6.1 m), consult Residential Piping and Longline Guideline and Service Manual available from equipment distributor.
8. If any refrigerant tubing is buried, provide a 6 in. (152.4 mm) vertical rise to the valve connections at the unit. Refrigerant tubing lengths up to 36 in. (914.4 mm) may be buried without further consideration. Do not bury refrigerant lines longer than 36 in. (914.4 mm).
9. Use only copper wire for electric connection at unit. Aluminum and clad aluminum are not acceptable for the type of connector provided.
10. Do not apply capillary tube indoor coils to these units.
11. Factory-supplied filter drier must be installed.

Copyright 2012 Carrier Corp. ● 7310 W. Morris St. ● Indianapolis, IN 46231

Edition Date: 09/12

Catalog No: 25HNB6–5PD

Manufacturer reserves the right to change, at any time, specifications and designs without notice and without obligations.

Replaces: 25HNB6–4PD