37MGHAQ
Outdoor Multi Zone Ductless System
Sizes 18K-55K

Installation Instruction

Fig. 1 — Single Fan (Sizes 18K - 36K

Fig. 2 — Dual Fan (Sizes 48K - 55K)

NOTE: Read the entire instruction manual before starting the installation.

NOTE: Images are for illustration purposes only. Actual models may differ slightly.

TABLE OF CONTENTS

PAGE
SAFETY CONSIDERATIONS....2
PRIOR TO INSTALLATION....10
ACCESSORIES....11
MODELS....11
DIMENSIONS....11
CLEARANCES....16
INSTALLATION SUMMARY....18
A. INSTALLATION INSTRUCTION....19
Step 1 - Select the Installation Location....20
Step 2 - Install the Drain Joint....20
Step 3 - Anchor the Outdoor Unit....21
B. REFRIGERANT CONNECTION INSTRUCTION....22
C. PIPE LENGTH AND DROP HEIGHT....24
D. WIRING INSTRUCTION....25
E. AIR EVACUATION....29
F. TEST RUN....32
TROUBLESHOOTING....34
DUCTLESS START-UP CHECKLIST - Multi Zone....37

Specifications subject to change without notice.

SAFETY CONSIDERATIONS

Installing, starting up, and servicing air- conditioning equipment can be hazardous due to system pressures, electrical components, and equipment location (roofs, elevated structures, etc.).

Only trained, qualified installers and service mechanics should install, start- up, and service this equipment.

Untrained personnel can perform basic maintenance functions such as coil cleaning. All other operations should be performed by trained service personnel **only**.

When working on the equipment, observe the precautions in the literature and on tags, stickers, and labels attached to the equipment.

Follow all safety codes.Wear safety glasses and work gloves. Keep a quenching cloth and a fire extinguisher nearby when brazing. Use care in handling, rigging, and setting bulky equipment.

Read these instructions thoroughly and follow all warnings or cautions included in the literature and attached to the unit. Consult local building codes and National Electrical Code (NEC) for special requirements. Recognize safety information.

This is the safety - alert symbol ⚠.

When you see this symbol on the unit and in instructions or manuals, be alert to the potential for personal injury. Understand these signal words: **DANGER**, **WARNING**, and **CAUTION**. These words are used with the safety- alert symbol.

DANGER identifies the most serious hazards which results in severe personal injury or death.

WARNING signifies hazards which could result in personal injury or death.

CAUTION is used to identify unsafe practices which may result in minor personal injury or product and property damage.

NOTE is used to highlight suggestions which results in enhanced installation, reliability, or operation.

WARNING - RISK OF FIRE DUE TO FLAMMABLE REFRIGERANT USED. FOLLOW HANDLING INSTRUCTIONS CAREFULLY IN COMPLIANCE WITH NATIONAL REGULATIONS.

R-454B Refrigerant Safety Group **A2L** R-454B

NOTE: Risk of Fire. Flammable refrigerant used. To be repaired only by trained service personnel. Do not puncture refrigerant tubing.

⚠ WARNING

PERSONAL INJURY AND PROPERTY DAMAGE HAZARD

For continued performance, reliability, and safety, the only approved accessories and replacement parts are those specified by the equipment manufacturer. The use of non-manufacturer approved parts and accessories could invalidate the equipment limited warranty and result in a fire risk, equipment malfunction, and failure.

Please review the manufacturer's instructions and replacement parts catalogs available from your equipment supplier.

⚠ WARNING

This appliance is not intended for use by persons (including children) with reduced physical, sensory or mental capabilities, or lack of experience and knowledge, unless they have been given supervision or instruction concerning use of the appliance by a person responsible for their safety. Children should be supervised to ensure that they do not play with the appliance.

⚠ WARNING

Only use the specified wire. If the wire is damaged, it must be replaced by the manufacturer, its service agent or similarly qualified persons in order to avoid a hazard.

The product must be properly grounded at the time of installation, or electric shock may occur.

For all electrical work, follow all local and national wiring standards, regulations, and the Installation Manual. Connect the cables tightly, and clamp them securely to prevent external forces from damaging the terminal. Improper electrical connections can overheat and cause fire, and may also cause shock. All electrical connections must be made according to the Electrical Connection Diagram located on the panels of the indoor and outdoor units.

All wiring must be properly arranged to ensure that the control board cover can close properly. If the control board cover is not closed properly, it can lead to corrosion and cause the connection points on the terminal to heat up, catch fire, or cause electrical shock.

Disconnection must be incorporated in the fixed wiring in accordance with NEC, CSA and Local Codes. **Do not** share the electrical outlet with other appliances. Improper or insufficient power supply can cause fire or electric shock.

If connecting power to fixed wiring, an all-pole disconnection device which has at least 3mm clearances in all poles, and have a leakage current that may exceed 10mA, the residual current device (RCD) having a rated residual operating current not exceeding 30mA, and disconnection must be incorporated in the fixed wiring in accordance with NEC, CSA and Local Codes.

⚠ WARNING

Turn off the air conditioner and disconnect the power before performing any installation or repairing. Failure to do so can cause electric shock.

Installation must be performed by an authorized dealer or specialist. Defective installation can cause water leakage, electrical shock, or fire. Installation must be performed according to the installation instructions.

Improper installation can cause water leakage, electrical shock, or fire. Contact an authorized service technician for repair or maintenance of this unit. This appliance shall be installed in accordance with national wiring regulations.

Only use the included accessories, parts, and specified parts for installation. Using non-standard parts can cause water leakage, electrical shock, fire, and can cause the unit to fail.

Install the unit in a firm location that can support the unit's weight. If the chosen location cannot support the unit's weight, or the installation is not done properly, the unit may drop and cause serious injury and damage. Install drainage piping according to the instructions in this manual. Improper drainage may cause water damage to your home and property. For units that have an auxiliary electric heater, do not install the unit within 3 feet (1 meter) of any combustible materials.

If combustible gas accumulates around the unit, it may cause fire. Do not turn on the power until all work has been completed. When moving or relocating the air conditioner, consult experienced service technicians for disconnection and re-installation of the unit.

Read the information for details in "indoor unit installation" and "outdoor unit installation" sections.

⚠ WARNING

ELECTRICAL SHOCK HAZARD

Failure to follow this warning could result in personal injury or death.

Before installing, modifying, or servicing system, the main electrical disconnect switch must be in the **OFF** position. There may be more than 1 disconnect switch. Lock out and tag switch with a suitable warning label.

⚠ WARNING

EXPLOSION HAZARD

Failure to follow this warning could result in death, serious personal injury, and/or property damage.

Never use air or gases containing oxygen for leak testing or operating refrigerant compressors. Pressurized mixtures of air or gases containing oxygen can lead to an explosion.

⚠ WARNING

FOR FLAMMABLE REFRIGERANTS

Do not use means to accelerate the defrosting process or to clean, other than those recommended by the manufacturer.

The appliance shall be stored in a room without continuously operating ignition sources (for example: open flames, an operating gas appliance or an operating electric heater).

Do not pierce or burn.

Be aware that refrigerants may not contain an odor.

⚠ CAUTION

EQUIPMENT DAMAGE HAZARD

Failure to follow this caution may result in equipment damage or improper operation.

Do not bury more than 36 in. (914 mm) of refrigerant pipe in the ground. If any section of pipe is buried, there must be a 6 in. (152 mm) vertical rise to the valve connections on the outdoor units. If more than the recommended length is buried, refrigerant may migrate to the cooler buried section during extended periods of system shutdown. This causes refrigerant slugging and could possibly damage the compressor at start-up.

1. **Installation** (where refrigerant pipes are allowed)
   Any person who is involved with working on or breaking into a refrigerant circuit should hold a current valid certificate from an industry-accredited assessment authority, which authorizes their competence to handle refrigerants safely in accordance with an industry recognized assessment specification.
   Maintenance and repair requiring the assistance of other skilled personnel shall be carried out under the supervision of the person competent in the use of flammable refrigerants.
   That the installation of pipe-work shall be kept to a minimum.
   That pipe-work shall be protected from physical damage.
   Where refrigerant pipes shall be compliance with national gas regulations.
   That mechanical connections shall be accessible for maintenance purposes.
   Be more careful that foreign matter (oil, water, etc) does not enter the piping.
   Also, when storing the piping, securely seal the opening by pinching, taping, etc.
   All working procedure that affects safety means shall only be carried by competent persons.
   Appliance shall be stored in a well ventilated area where the room size corresponds to the room area as specified for operation.
   Joints shall be tested with detection equipment with a capability of 5 g/year of refrigerant or better, with the equipment in standstill and under operation or under a pressure of at least these standstill or operation conditions after installation. Detachable joints shall NOT be used in the indoor side of the unit (brazed, welded joint could be used).
   In cases that require mechanical ventilation, ventilation openings shall be kept clear of obstruction.

LEAK DETECTION SYSTEM installed. Unit must be powered except for service. For the unit with refrigerant sensor, when the refrigerant sensor detects refrigerant leakage, the indoor unit will display a error code and emit a buzzing sound, the compressor of outdoor unit will immediately stop, and the indoor fan will start running. The service life of the refrigerant sensor is 15 years. When the refrigerant sensor malfunctions, the indoor unit will display the error code "FHCC".
The refrigerant sensor can not be repaired and can only be replaced by the manufacturer. It shall only be replaced with the sensor specified by the manufacturer.

2. **When a FLAMMABLE REFRIGERANT is used,** the requirements for installation space of appliance and/or ventilation requirements are determined according to:

- the mass charge amount (M) used in the appliance,
- the installation location,
- the type of ventilation of the location or of the appliance.
- piping material, pipe routing, and installation shall include protection from physical damage in operation and service, and be in compliance with national and local codes and standards, such as ASHRAE 15, IAPMO Uniform Mechanical Code, ICC International Mechanical Code, or CSA B52. All field joints shall be accessible for inspection prior to being covered or enclosed.
- that protection devices, piping, and fittings shall be protected as far as possible against adverse environmental affects, for example, the danger of water collecting and freezing in relief pipes or the accumulation of dirt and debris;
- that piping in refrigeration systems shall be so designed and installed to minimize the likelihood of hydraulic shock damaging the system;
- that steel pipes and components shall be protected against corrosion with a rustproof coating before applying any insulation;
- that precautions shall be taken to avoid excessive vibration or pulsation;
- the minimum floor area of the room shall be mentioned in the form of a table or a single figure without reference to a formula;
- after completion of field piping for split systems, the field pipe-work shall be pressure tested with an inert gas and then vacuum tested prior to refrigerant charging, according to the following requirements:

a. The minimum test pressure for the low side of the system shall be the low side design pressure and the minimum test pressure for the high side of the system shall be the high side design pressure, unless the high side of the system cannot be isolated from the low side of the system in which case the entire system shall be pressure tested to the low side design pressure.
b. The test pressure after removal of pressure source shall be maintained for at least 1 h with no decrease of pressure indicated by the test gauge, with test gauge resolution not exceeding 5% of the test pressure.
c. During the evacuation test, after achieving a vacuum level specified in the manual or less, the refrigeration system shall be isolated from the vacuum pump and the pressure shall not rise above 1500 microns within 10 min. The vacuum pressure level shall be specified in the manual, and shall be the lessor of 500 microns or the value required for compliance with national and local codes and standards, which may vary between residential, commercial, and industrial buildings.

- field-made refrigerant joints indoors shall be tightness tested according to the following requirements: The test method shall have a sensitivity of 5 grams per year of refrigerant or better under a pressure of at least 0.25 times the maximum allowable pressure. No leak shall be detected.

3. **Qualification of Workers**

Any maintenance, service and repair operations must be required qualification of the working personnel. Every working procedure that affects safety means shall only be carried out by competent persons that joined the training and achieved competence should be documented by a certificate. The training of these procedures is carried out by national training organizations or manufacturers that are accredited to teach the relevant national competency standards that may be set in legislation. All training shall follow the ANNEX HH requirements of UL 60335-2-40 4th Edition.
Examples for such working procedures are:
• breaking into the refrigerating circuit;
• opening of sealed components;
• opening of ventilated enclosures.

Servicing Information

1. **Checks to the area**

Prior to beginning work on systems containing flammable refrigerants, safety checks are necessary to ensure that the risk of ignition is minimized. For repair to the refrigerating system, the following precautions shall be complied with prior to conducting work on the system.

2. **Work procedure**

Works shall be undertaken under a controlled procedure so as to minimize the risk of a flammable gas or vapor being present while the work is being performed.

3. **General work area**

All maintenance staff and others working in the local area shall be instructed on the nature of work being carried out. work in confined spaces shall be avoided.

4. **Checking for presence of refrigerant**

The area shall be checked with an appropriate refrigerant detector prior to and during work, to ensure the technician is aware of potentially flammable atmospheres. Ensure that the leak detection equipment being used is suitable for use with flammable refrigerants, i.e. no sparking, adequately sealed or intrinsically safe.

5. **Presence of fire extinguisher**

If any hot work is to be conducted on the refrigeration equipment or any associated parts, appropriate fire extinguishing equipment shall be available to hand. Have a dry power or CO2 fire extinguisher adjacent to the charging area.

6. **No ignition sources**

No person carrying out work in relation to a REFRIGERATING SYSTEM which involves exposing any pipe work shall use any sources of ignition in such a manner that it may lead to the risk of fire or explosion. All possible ignition sources, including cigarette smoking, should be kept sufficiently far away from the site of installation, repairing, removing and disposal, during which refrigerant can possibly be released to the surrounding space. Prior to work taking place, the area around the equipment is to be surveyed to make sure that there are no flammable hazards or ignition risks. "No Smoking" signs shall be displayed.

7. **Ventilated area**

Ensure that the area is in the open or that it adequately ventilated before breaking into the system or conducting any hot work. A degree of ventilation shall continue during the period that the work is carried out. The ventilation should safely disperse any released refrigerant and preferably expel it externally into the atmosphere.

Manufacturer reserves the right to change, at any time, specifications and designs without notice and without obligations.

8. Checks to the refrigeration equipment

Where electrical components are being changed, they shall be fit for the purpose and to the correct specification. At all times the manufacturer's maintenance and service guidelines shall be followed. If in doubt consult the manufacturer's technical department for assistance. The following checks shall be applied to installations using FLAMMABLE REFRIGERANTS:

- the actual refrigerant charge is in accordance with the room size within which the refrigerant containing parts are installed;
- the ventilation machinery and outlets are operating adequately and are not obstructed;
- if an indirect refrigerating circuit is being used, the secondary circuits shall be checked for the presence of refrigerant; marking to the equipment continues to be visible and legible, marking and signs that are illegible shall be corrected;
- refrigeration pipe or components are installed in a position where they are unlikely to be exposed to any substance which may corrode refrigerant containing components, unless the components are constructed of materials which are inherently resistant to being corroded or are suitably protected against being so corroded.

9. Checks to electrical devices

Repair and maintenance to electrical components shall include initial safety checks and component inspection procedures. If a fault exists that could compromise safety, then no electrical supply shall be connected to the circuit until it is satisfactorily dealt with. If the fault cannot be corrected immediately but it is necessary to continue operation, and adequate temporary solution shall be used. This shall be reported to the owner of the equipment so all parties are advised.

Initial safety checks shall include:

- that capacitors are discharged: this shall be done in a safe manner to avoid possibility of sparking
- that there no live electrical components and wiring are exposed while charging,
- that there is continuity of earth bonding.

10. Sealed electrical components shall be replaced.

11. Intrinsically safe components must be replaced.

12. Cabling

Check that cabling will not be subject to wear, corrosion, excessive pressure, vibration, sharp edges or any other adverse environmental affects. The check shall also take into account the affects of aging or continual vibration from sources such as compressors or fans.

13. Detection of flammable refrigerants

Under no circumstances shall potential sources of ignition be used in the searching for or detection of refrigerant leaks. A halide torch (or any other detector using a naked flame) shall not be used. The following leak detection methods are deemed acceptable for refrigerant systems. Electronic leak detectors may be used to detect refrigerant leaks but, in the case of FLAMMABLE REFRIGERANTS, the sensitivity may not be adequate, or may need re-calibration. (Detection equipment shall be calibrated in a refrigerant free area.) Ensure that the detector is not a potential source of ignition and is suitable for the refrigerant used. Leak detection equipment shall be set at a percentage of the LFL of the refrigerant and shall be calibrated to the refrigerant employed, and the appropriate percentage of gas (25% maximum) is confirmed. Leak detection fluids are also suitable for use with most refrigerants but the use of detergents containing chlorine shall be avoided as the chlorine may react with the refrigerant and corrode the copper pipework.

NOTE: Examples of leak detection fluids are:
- bubble method,
- fluorescent method agents.

If a leak is suspected, all naked flames shall be removed/extinguished.

If a leakage of refrigerant is found which requires brazing, all of the refrigerant shall be recovered from the system, or isolated (by means of shut off valves) in a part of the system remote from the leak. See the following instructions of removal of refrigerant.

14. Removal and Evacuation

When breaking into the refrigerant circuit to make repairs - or for any other purpose conventional procedures shall be used. However, for flammable refrigerants it is important that best practice be followed, since flammability is a consideration.

The following procedure shall be adhered to:

- safely remove refrigerant following local and national regulations;
- evacuate;
- purge the circuit with inert gas (optional for A2L);
- evacuate (optional for A2L);
- continuously flush or purge with inert gas when using flame to open circuit; and
- open the circuit.

The refrigerant charge shall be recovered into the correct recovery cylinders if venting is not allowed by local and national codes. For appliances containing flammable refrigerants, the system shall be purged with oxygen-free nitrogen to render the appliance safe for flammable refrigerants. This process might need to be repeated several times. Compressed air or oxygen shall not be used for purging refrigerant systems.

For appliances containing flammable refrigerants, refrigerants purging shall be achieved by breaking the vacuum in the system with oxygen-free nitrogen and continuing to fill until the working pressure is achieved, then venting to atmosphere, and finally pulling down to a vacuum (optional for A2L). This process shall be repeated until no refrigerant is within the system (optional for A2L). When the final oxygen-free nitrogen charge is used, the system shall be vented down to atmospheric pressure to enable work to take place.

The outlet for the vacuum pump shall not be close to any potential ignition sources, and ventilation shall be available.

15. Charging procedures

In addition to conventional charging procedures, the following requirements shall be followed:

- Works shall be undertaken with appropriate tools only (In case of uncertainty, please consult the manufacturer of the tools for use with flammable refrigerants).
- Ensure that contamination of different refrigerants does not occur when using charging equipment. Hoses or lines shall be as short as possible to minimize the amount of refrigerant contained in them.
- Cylinders shall be kept upright.
- Ensure that the refrigeration system is earthed prior to charging the system with refrigerant.
- Label the system when charging is complete (if not already).
- Extreme care shall be taken not to overfill the refrigeration system.
- Prior to recharging the system it shall be pressure tested with oxygen free nitrogen (OFN). The system shall be leak tested on completion of charging but prior to commissioning. A follow up leak test shall be carried out prior to leaving the site.

16. Decommissioning

Before carrying out this procedure, it is essential that the technician is completely familiar with the equipment and all its detail. It is recommended good practice that all refrigerants are recovered safely. Prior to the task being carried out, an oil and refrigerant sample shall be taken in case analysis is required prior to re-use of recovered refrigerant. It is essential that electrical power is available before the task is commenced.

a. Become familiar with the equipment and its operation.
b. Isolate system electrically
c. Before attempting the procedure ensure that:
   - mechanical handling equipment is available, if required, for handling refrigerant cylinders;
   - all personal protective equipment is available and being used correctly;
   - the recovery process is supervised at all times by a competent person;
   - recovery equipment and cylinders conform to the appropriate standards.
d. Pump down refrigerant system, if possible.
e. If a vacuum is not possible, make a manifold so that refrigerant can be removed from various parts of the system.
f. Make sure that cylinder is situated on the scales before recovery takes place.
g. Start the recovery machine and operate in accordance with instructions.
h. Do not overfill cylinders (no more than 80% volume liquid charge)
i. Do not exceed the maximum working pressure of the cylinder, even temporarily.
j. When the cylinders have been filled correctly and the process completed, make sure that the cylinders and the equipment are removed from site promptly and all isolation valves on the equipment are closed off.
k. Recovered refrigerant shall not be charged into another refrigeration system unless it has been cleaned and checked.

17. Labeling

Equipment shall be labeled stating that it has been de-commissioned and emptied of refrigerant. The label shall be dated and signed. For appliances containing FLAMMABLE REFRIGERANTS, ensure that there are labels on the equipment stating the equipment contains FLAMMABLE REFRIGERANT.

18. Recovery

When removing refrigerant from a system, either for servicing or decommissioning, it is recommended good practice that all refrigerants are removed safely.When transferring refrigerant into cylinders, ensure that only appropriate refrigerant recovery cylinders are employed. Ensure that the correct number of cylinders for holding the total system charge is available. All cylinders to be used are designated for the recovered refrigerant and labeled for that refrigerant (i. e. special cylinders for the recovery of refrigerant). Cylinders shall be complete with pressure-relief valve and associated shut-off valves in good working order. Empty recovery cylinders are evacuated and, if possible, cooled before recovery occurs.

The recovery equipment shall be in good working order with a set of instructions concerning the equipment that is at hand and shall be suitable for the recovery of the flammable refrigerant. If in doubt, the manufacturer should be consulted. In addition, a set of calibrated weighing scales shall be available and in good working order. Hoses shall be complete with leak-free disconnect couplings and in good condition.

The recovered refrigerant shall be processed according to local legislation in the correct recovery cylinder, and the relevant waste transfer note arranged. Do not mix refrigerants in recovery units and especially not in cylinders. If compressors or compressor oils are to be removed, ensure that they have been evacuated to an acceptable level to make certain that flammable refrigerant does not remain within the lubricant. The compressor body shall not be heated by an open flame or other ignition sources to accelerate this process. When oil is drained from a system, it shall be carried out safely.

19. Transportation, marking and storage for units

1. Transport of equipment containing flammable refrigerants.
   Compliance with the transport regulations.
2. Marking of equipment using signs.
   Compliance with local regulations.
3. Disposal of equipment using flammable refrigerants.
   Compliance with national regulations.
4. Storage of equipment/appliances.
   The storage of the appliance should be in accordance with the manufacturer's instructions.
5. Storage of packed (unsold) equipment.
   Storage package protection should be constructed in such a way that mechanical damage to the equipment inside the package will not cause a leak of the refrigerant charge. The maximum number of pieces of equipment permitted to be stored together will be determined by local regulations.

Explanation of symbols displayed on the indoor unit or outdoor unit.

	WARNING	This symbol shows that this appliance used a flammable refrigerant. If the refrigerant is leaked and exposed to an external ignition source, there is a risk of fire.
	CAUTION	This symbol shows that the operation manual should be read carefully.
	CAUTION	This symbol shows that a service personnel should be handling this equipment with reference to the installation manual.
	CAUTION	
	CAUTION	This symbol shows that information is available such as the operating manual or installation manual.

For R454B refrigerant charge amount and minimum room area

Requirements for room area limits using R454B refrigerant in unventilated areas: Our multiple systems are all confirmed to meet the requirement of Enhanced Tightness Refrigerating Systems. Units installed at a height not exceeding 1.8m above the ground are usually equipped with refrigerant sensor, which minimum room area (A_{min}) of operating or storage should be determined according to refrigerant charge (m_C) or releasable charge (m_{rel}) of system, as specified in the Table 1. The table is also applicable for those units without refrigerant sensor but its installation heights are between 5.9ft/1.8m and 7.2ft/2.2m.

NOTE: The calculation is based on the standard connection pipe length of 24.6ft/7.5m for each indoor units, an extra releasable charge should be added for per meter exceeding 24.6ft/7.5m.

CAUTION

A minimum pipe run of 10 feet (3 meters) is required to minimize vibration and excessive noise.

NOTE: The installation must be performed in accordance with the requirement of the local and national standards. The installation my differ slightly.

Table 1 — A (min)

	HO, RELEASE HEIGHT FT (M)						
	MC OR MREL LBS (KG)	≤ 7.2 (2.2)	7.5 (2.3)	7.9 (2.4)	8.5 (2.6)	9.2 (2.8)	9.8 (3.0)
MC OR MREL REFRIGERANT CHARGE AMOUNT POUNDS (KILOGRAMS)	≤ 3.91 (1.776)	12 (1.10)					
	4.0 (1.8)	60 (5.53)	57 (5.29)	55 (5.07)	50 (4.68)	47 (4.34)	44 (4.05)
	4.4 (2.0)	66 (6.14)	63 (5.88)	61 (5.63)	56 (5.2)	52 (4.83)	48 (4.5)
	4.9 (2.2)	73 (6.76)	70 (6.46)	67 (6.19)	62 (5.72)	57 (5.31)	53 (4.95)
	5.3 (2.4)	79 (7.37)	76 (7.05)	73 (6.76)	67 (6.24)	62 (5.79)	58 (5.41)
	5.7 (2.6)	86 (7.99)	82 (7.64)	79 (7.32)	73 (6.76)	68 (6.27)	63 (5.86)
	6.2 (2.8)	93 (8.6)	89 (8.23)	85 (7.88)	78 (7.28)	73 (6.76)	68 (6.31)
	6.6 (3.0)	99 (9.21)	95 (8.81)	91 (8.45)	84 (7.8)	78 (7.24)	73 (6.76)
	7.1 (3.2)	106 (9.83)	101 (9.4)	97 (9.01)	90 (8.32)	83 (7.72)	78 (7.21)
	7.5 (3.4)	112 (10.44)	108 (9.99)	103 (9.57)	95 (8.84)	88 (8.2)	82 (7.66)
	7.9 (3.6)	119 (11.06)	114 (10.58)	109 (10.14)	101 (9.36)	94 (8.69)	87 (8.11)
	8.4 (3.8)	126 (11.67)	120 (11.16)	115 (10.7)	106 (9.88)	99 (9.17)	92 (8.56)
	8.8 (4.0)	132 (12.29)	126 (11.75)	121 (11.26)	112 (10.4)	104 (9.65)	97 (9.01)
	9.3 (4.2)	139 (12.9)	133 (12.34)	127 (11.82)	117 (10.91)	109 (10.14)	102 (9.46)
	9.7 (4.4)	145 (13.51)	139 (12.93)	133 (12.39)	123 (11.43)	114 (10.62)	107 (9.91)
	10.1 (4.6)	152 (14.13)	145 (13.51)	139 (12.95)	129 (11.95)	119 (11.1)	112 (10.36)
	10.6 (4.8)	159 (14.74)	152 (14.1)	145 (13.51)	134 (12.47)	125 (11.58)	116 (10.81)
	11 (5.0)	165 (15.36)	158 (14.69)	152 (14.08)	140 (12.99)	130 (12.07)	121 (11.26)
	11.5 (5.2)	172 (15.97)	164 (15.28)	158 (14.64)	145 (13.51)	135 (12.55)	126 (11.71)
	11.9 (5.4)	179 (16.58)	171 (15.86)	164 (15.2)	151 (14.03)	140 (13.03)	131 (12.16)
	12.3 (5.6)	185 (17.2)	177 (16.45)	170 (15.77)	157 (14.55)	145 (13.51)	136 (12.61)
	12.8 (5.8)	192 (17.81)	183 (17.04)	176 (16.33)	162 (15.07)	151 (14)	141 (13.06)
	13.2 (6.0)	198 (18.43)	190 (17.63)	182 (16.89)	168 (15.59)	156 (14.48)	145 (13.51)
	13.7 (6.2)	205 (19.04)	196 (18.21)	188 (17.45)	173 (16.11)	161 (14.96)	150 (13.96)
	14.1 (6.4)	212 (19.66)	202 (18.8)	194 (18.02)	179 (16.63)	166 (15.44)	155 (14.41)
	14.6 (6.6)	218 (20.27)	209 (19.39)	200 (18.58)	185 (17.15)	171 (15.93)	160 (14.86)
	15 (6.8)	225 (20.88)	215 (19.98)	206 (19.14)	190 (17.67)	177 (16.41)	165 (15.32)
	15.4 (7.0)	231 (21.5)	221 (20.56)	212 (19.71)	196 (18.19)	182 (16.89)	170 (15.77)
	15.9 (7.2)	238 (22.11)	228 (21.15)	218 (20.27)	201 (18.71)	187 (17.37)	175 (16.22)

Amin (ft2 (m2)
mc Actual refrigerant charge in the system lbs (kg)
mREL Refrigerant releasable charge lbs (kg)
Ho Release height, measured from duct opening, in ft (m)
hinst Height of install, from the bottom of the indoor appliance, measured in ft (m).
Ho ≈ Hinst

WARNING: Minimum room area of conditioned space is based on releasable charge or total system refrigerant charge.

For releasable charge limited system:

SAFETY SHUT-OFF VALVES are used in some multiple outdoor units, as shown in the following table, for the purposes of limiting the releasable charge, which are activated by a leak detection system.

⚠ WARNING

PERSONAL INJURY AND PROPERTY DAMAGE HAZARD

SAFETY SHUT-OFF VALVES default to fully closed position when the appliance is de-energized, so refrigerant will not be completely released even when it was dismantled. Ensure the complete release of refrigerant through one of following methods before repairing the machine.

- Method 1: Release refrigerant while the machine is powered on.
- Method 2: Manually open the safety shut-off valve using a magnetic ring.

Releasable charge (m_{rel}) of system should be calculated based on internal volume of all indoor units and connecting pipes. Each indoor units correspond to a releasable charge as following table, add them up based on the combination of indoor units, and then add to the basic releasable charge of 7.2oz (0.45kg), you will get the total releasable charge of system.

NOTE: The calculation is based on the standard connection pipe length of 24.6ft/7.5m for each indoor units, an extra releasable charge should be added for per meter exceeding 24.6ft/7.5m.

Table 2 — Models - Indoor Units — Releasable Charge

IDU TYPE	IDU MODEL	RELEASABLE CHARGE, OZ (G)	IDU TYPE	IDU MODEL	RELEASABLE CHARGE (G)
High Wall	45MPHAQ06XA3	16.3 (463)	Ducted	45MBDAQ06XA3	12.3 (350)
	45MPHAQ09XA3	16.3 (463)		45MBDAQ12XA3	12.3 (350)
	45MPHAQ12XA3	16.3 (463)		45MBDAQ18XA3	17.3 (491)
	45MPHAQ18XA3	27.8 (789)	High Static Ducted	45MBDAQ12XH3	11.5 (325)
High Wall Performance	45MAHAQ06XA3	13.9 (394)		45MBDAQ18XH3	15.8 (448)
	45MAHAQ09XA3	13.9 (394)		45MBDAQ24XH3	24.1 (684)
	45MAHAQ12XA3	13.9 (394)	Console	45MBFAQ09XA3	14.2 (403)
	45MAHAQ18XA3	17 (482)		45MBFAQ12XA3	14.2 (403)
	45MAHAQ24XA3	36.2 (1025)		45MBFAQ16XA3	14.9 (423)
	45MAHAQ30XA3	36.2 (1025)		45MCFAQ18XA3	16 (455)
	45MAHAQ33XA3	36.2 (1025)		45MCFAQ24XA3	29.5 (836)
	45MAHAQ36XA3	36.2 (1025)	Air Handler	45MBAAQ18XB3	24.2 (685)
Cassette	45MBCAQ12XA3	17.4 (494)		45MBAAQ24XB3	32.5 (921)
	45MBCAQ18XA3	18.1 (513)		45MBAAQ30XB3	47.8 (1355)
	45MBCAQ24XA3	29.6 (838)		45MBAAQ36XB3	47.8 (1355)
1 way cassette	45MCCAQ06XA3	16.6 (470)			
	45MCCAQ12XA3	16.6 (470)			
	45MCCAQ18XA3	16.9 (490)			

PRIOR TO INSTALLATION

Before installing the indoor unit, ensure compatibility with the outdoor unit using the Product Data as a reference. It is also necessary to confirm the proper application of the equipment and to perform a heat load calculation for proper sizing.

Table 3 — Releasable Charge Calculation

RELEASABLE CHARGE OF INDOOR UNITS	BASIC RELEASABLE CHARGE, OZ (G)	EXTRA RELEASABLE CHARGE	TOTAL RELEASABLE CHARGE
Based on Table 2, add releasable charges of all connected indoor units.	7.2 (204)	• 0 oz when connection pipe length for each indoor unit is within 25 ft (7.6 m). • 0.7 oz (20 g) per foot (meter) exceeding 25 ft (7.6 m) for each 6/9/12/18k unit. • 1.8 oz (50 g) per foot (meter) exceeding 25 ft (7.6 m) for each 24/36k unit.	Add releasable charge of indoor units, basic releasable charge, and any extra releasable charge to get total releasable charge.

Table 4 — Pipe Specification

OUTDOOR MODEL			37MGHAQ18CA3	37MGHAQ24DA3	37MGHAQ30EA3	37MGHAQ36EA3	37MGHAQ48FA3	37MGHAQ55FA3
Power supply		V;Ph; Hz	208/230V;1Ph;60HZ					
Piping and Refrigerant Information	Refrigerant Type	Type	R454B					
	Charge Amount	lb. (kg)	4.89 (2.22)	7.54 (3.42)	8.38 (3.8)	8.38 (3.8)	9.48 (4.3)	9.48 (4.3)
	Liquid Pipe (size - connection type)	In (mm)	3 x 1/4in (3 x 6.35mm)	4 x 1/4in (4 x 6.35mm)	5 x 1/4in (5 x 6.35mm)		6 x 1/4in (6 x 6.35mm)	
	Suction Pipe (size - connection type)	In (mm)	3 x 3/8in (3 x 9.52mm)	3 x 3/8in + 1 x 1/2in (3 x 9.52mm + 1 x 12.7mm)	3 x 3/8in + 2 x 1/2in (3 x 9.52mm + 2 x 12.7mm)		4 x 3/8in + 2 x 1/2in (4 x 9.52mm + 2 x 12.7mm)	
	Number of IDU	ft. (m)	3	4	5	5	6	6

NOTE:

- If the outdoor unit is higher than the indoor unit, prevent rain from flowing into the indoor unit along the connection pipe by making a downward arc in the connection pipe before it enters the wall to the indoor unit. This ensures that rain drips from the connection pipe before it enters the wall.

- Piping and the interconnecting wiring are field supplied.

ACCESSORIES

The system is shipped with the following accessories. Use all of the installation parts and accessories needed to install the system. Improper installation may result in water leakage, electrical shock and fire, or cause the equipment to fail. Keep the installation manual in a safe place and **do not** discard any other accessories until the installation work has been completed.

Table 5 — Accessories

NAME	Q.TY (PC)	SHAPE	NAME	Q.TY (PC)	SHAPE
Manual	1-4		Drain Joint	1	
Piping Adapter (shipped wit the indoor or outdoor unit. **NOTE: Pipe size may differ from appliance to appliance, unit to unit. To meet different pipe size requirements, sometimes the pipe connections need a transfer connector installed on the outdoor unit.**	Optional part (one piece per one indoor unit)	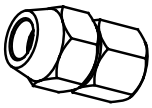	Seal Ring	1	
	Optional part (1-8 pieces for outdoor unit)		Mounting Pads	4	N/A

Optional Accessories: There are two types of remote controls: wired and wireless. Select a remote controller based on customer preferences and requirements and install in an appropriate place. Refer to indoor unit technical literature for guidance on selecting a suitable remote controller.

MODELS

Table 6 — Models

MODEL	VOLTAGE	OUTDOOR UNIT	RELEASABLE CHARGE (SHUTOFF VALVE)
18K	208/230-1-60	37MGHAQ18CA3	No
24K	208/230-1-60	37MGHAQ24DA3	Yes
30K	208/230-1-60	37MGHAQ30EA3	Yes
36K	208/230-1-60	37MGHAQ36EA3	Yes
48K	208/230-1-60	37MGHAQ48FA3	Yes
55K	208/230-1-60	37MGHAQ55FA3	Yes

DIMENSIONS

Table 7 — Dimensions and Weights

SYSTEM SIZE		18K	24K	30K	36K	48K	55K
		(208/230 V)	(208/230 V)	(208/230 V)	(208/230 V)	(208/230 V)	(208/230 V)
Height (H)	inch	31.89	31.89	38.39	38.39	52.48	52.48
	mm	810	810	975	975	1334	1334
Width (W)	inch	37.24	37.24	42.88	42.88	41.14	41.14
	mm	946	946	1090	1090	1046	1046
Depth (D)	inch	16.14	16.14	17.38	17.38	17.63	17.63
	mm	410	410	440	440	448	448
Weight -Net	lbs.	137.35	168.43	211.86	211.86	246.48	246.48
	kg	62.3	76.4	96.1	96.1	111.8	111.8

Manufacturer reserves the right to change, at any time, specifications and designs without notice and without obligations.

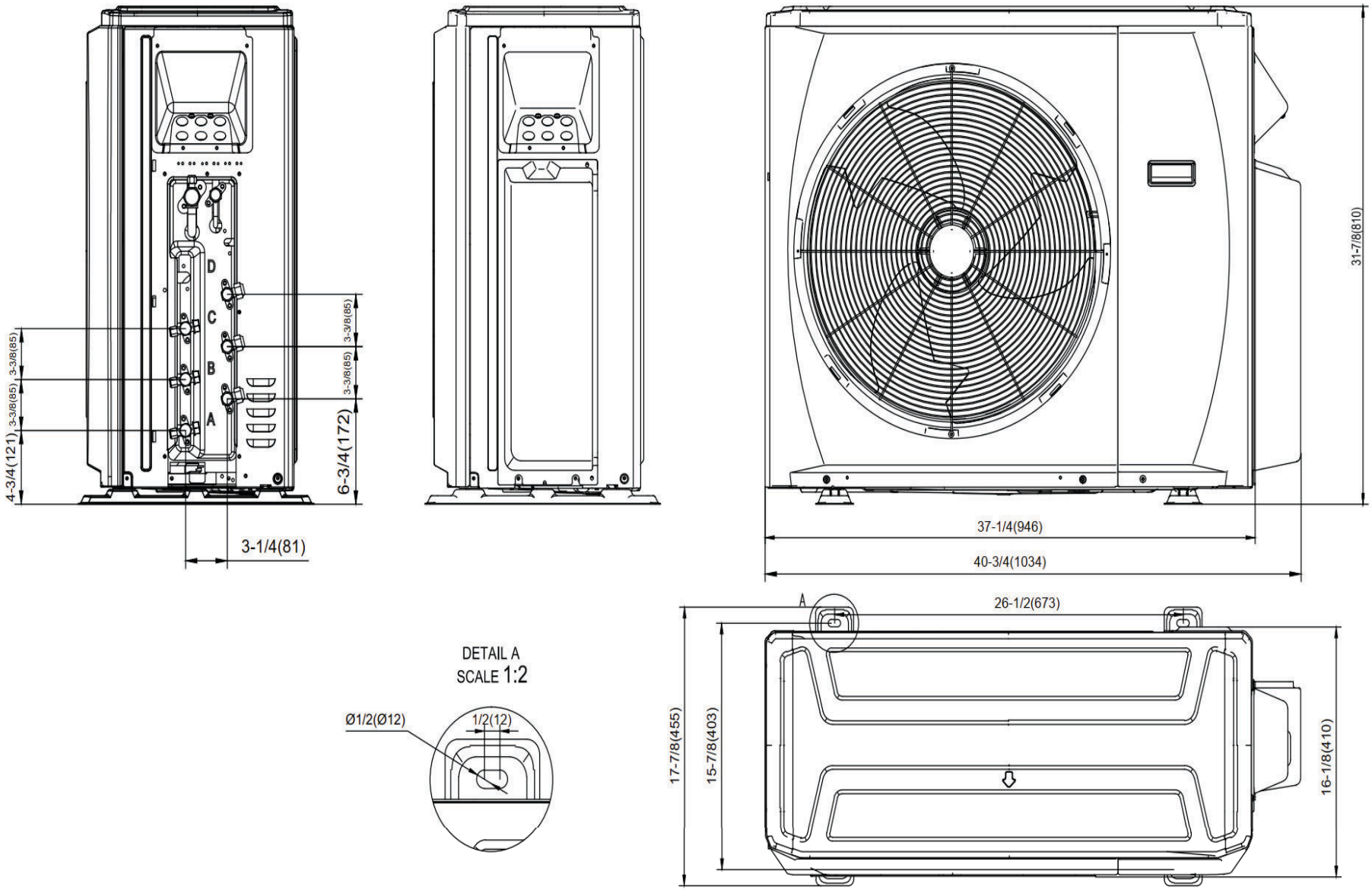

Fig. 3 — Size 18K

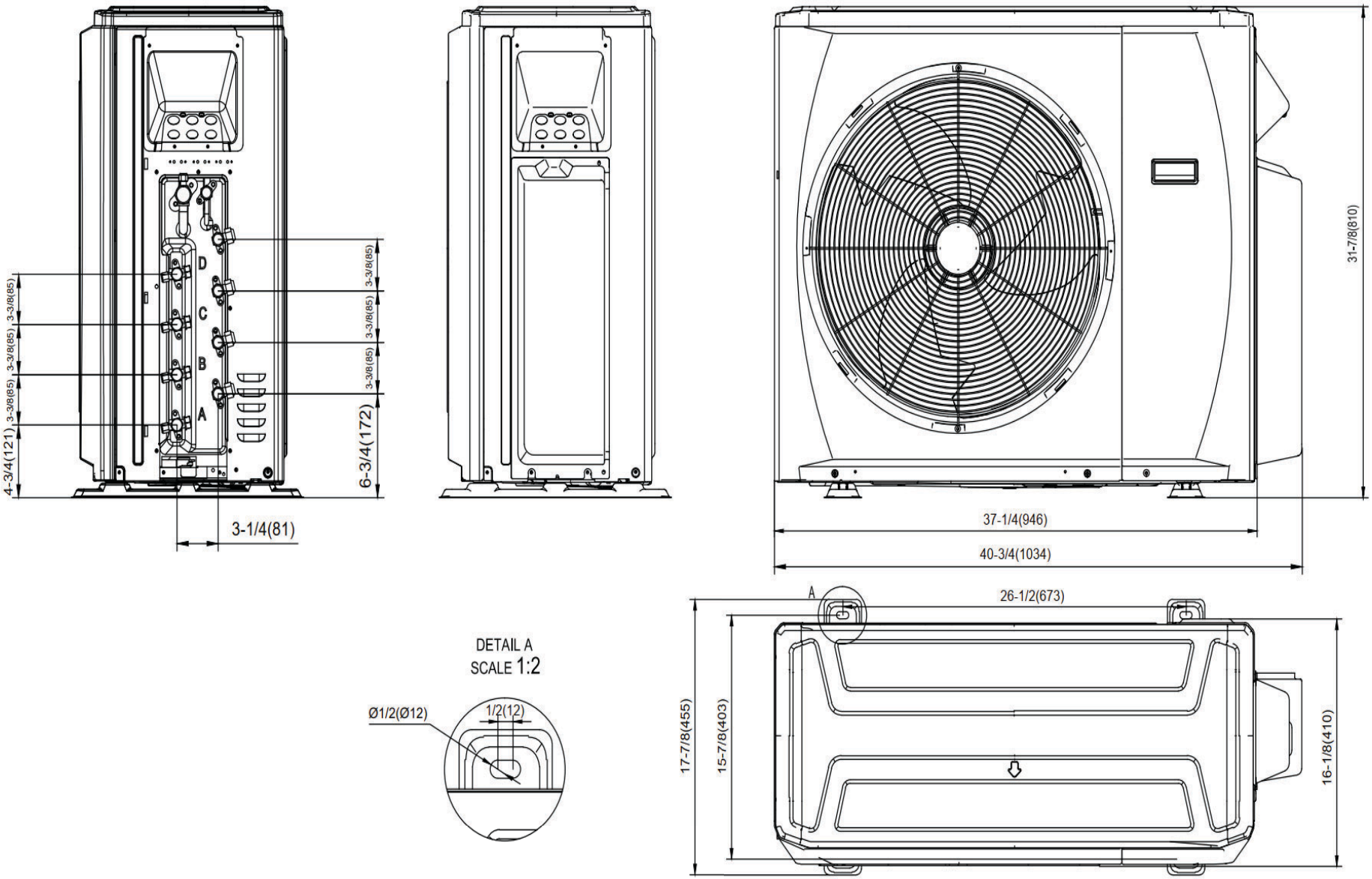

Fig. 4 — Size 24K

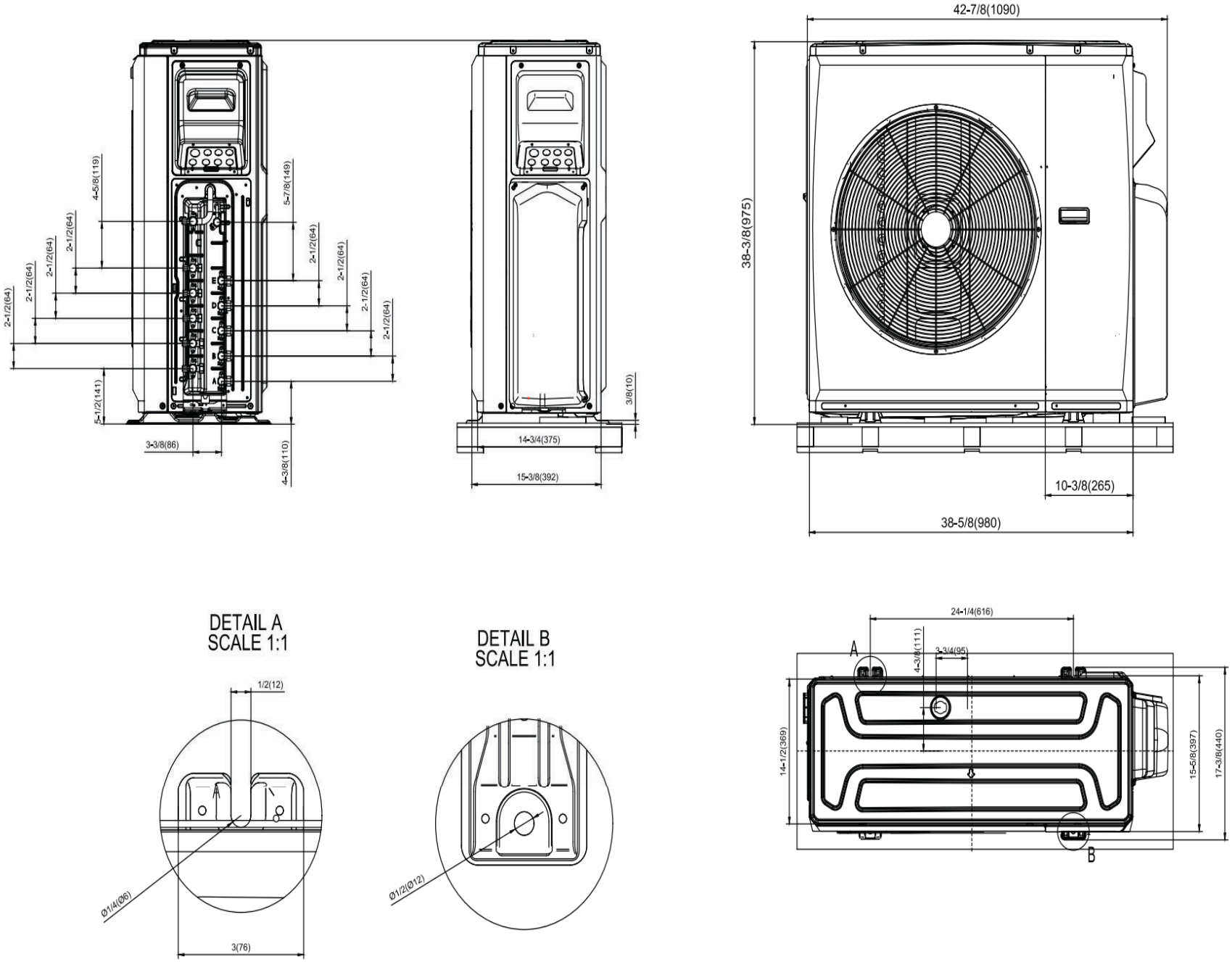

Fig. 5 — Sizes 30K and 36K

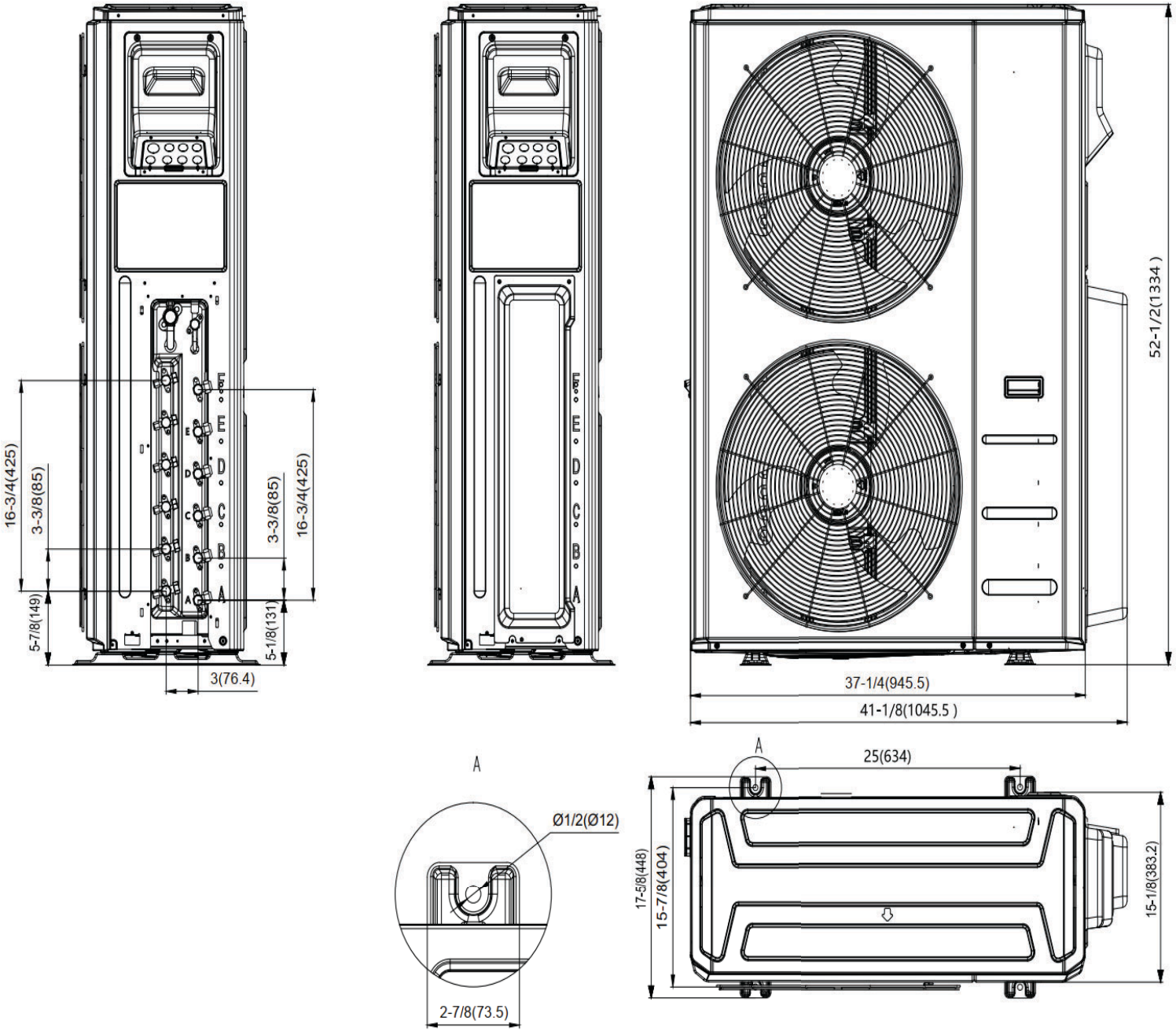

Fig. 6 — Sizes 48K and 55K

DIMENSIONS AND CLEARANCES

If you install the unit on the ground or on a concrete mounting platform, perform the following steps.

1. Mark the positions for four expansion bolts based on the dimensions chart.
2. Pre-drill holes for expansion bolts.
3. Place a nut on the end of each expansion bolt.
4. Hammer expansion bolts into the pre-drilled holes.
5. Remove the nuts from expansion bolts, and place the outdoor unit on bolts.
6. Put a washer on each expansion bolt, then replace the nuts.
7. Use a wrench to tighten each nut until snug.

NOTE: Drilling the Hole in the Wall

You must drill a hole in the wall for the refrigerant piping, and the signal cable that will connect the indoor and outdoor units.

1. Determine the location of the wall hole based on the location of the outdoor unit.
2. Using a 2.5in (65mm) core drill, drill a hole in the wall.

NOTE: When drilling the wall hole, ensure to avoid wires, plumbing, and other sensitive components.

3. Place the protective wall cuff in the hole. This protects the edges of the hole and helps seal it when you finish the installation process.

CLEARANCES

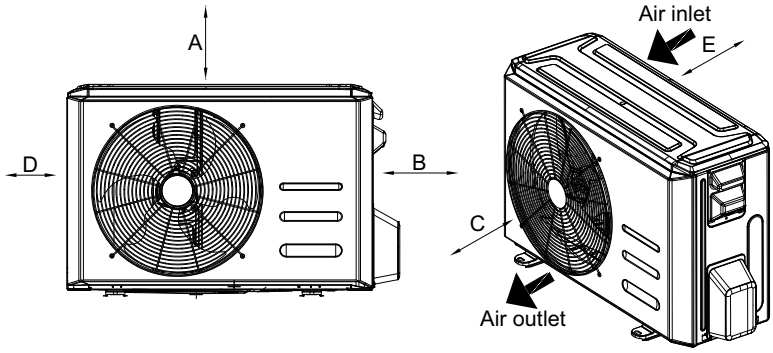

Fig. 7 — Clearances

Table 8 — Clearance Dimensions

UNIT	MINIMUM VALUE IN. (MM)
A	20 (500)
B	14 (350)
C	20 (500)
D	4 (100)
E	4 (100)

NOTE: The outdoor unit must be mounted at least 2in (50mm) above the maximum anticipated snow depth.

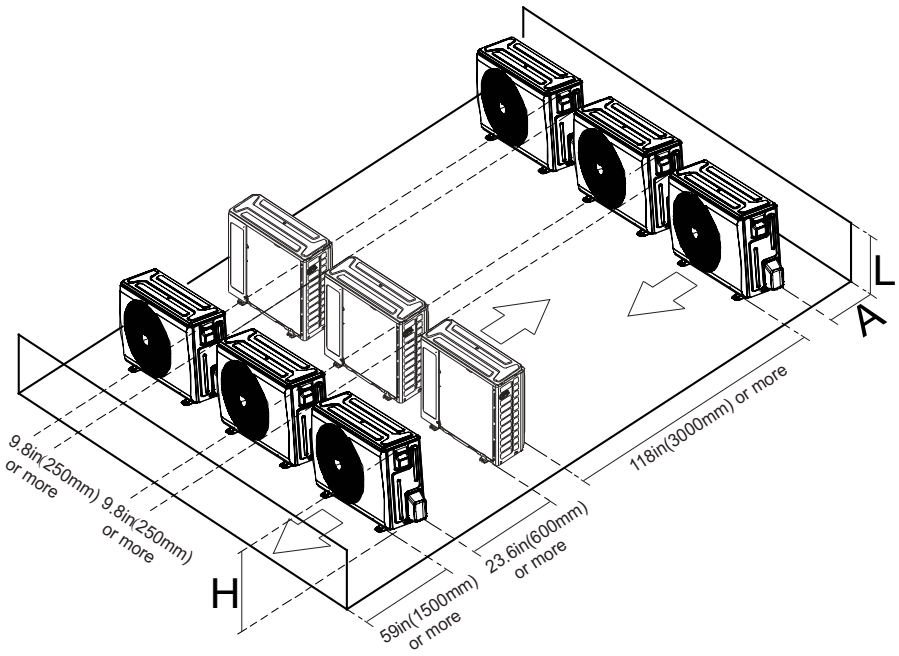

Fig. 8 — Clearances - Single Fan Units

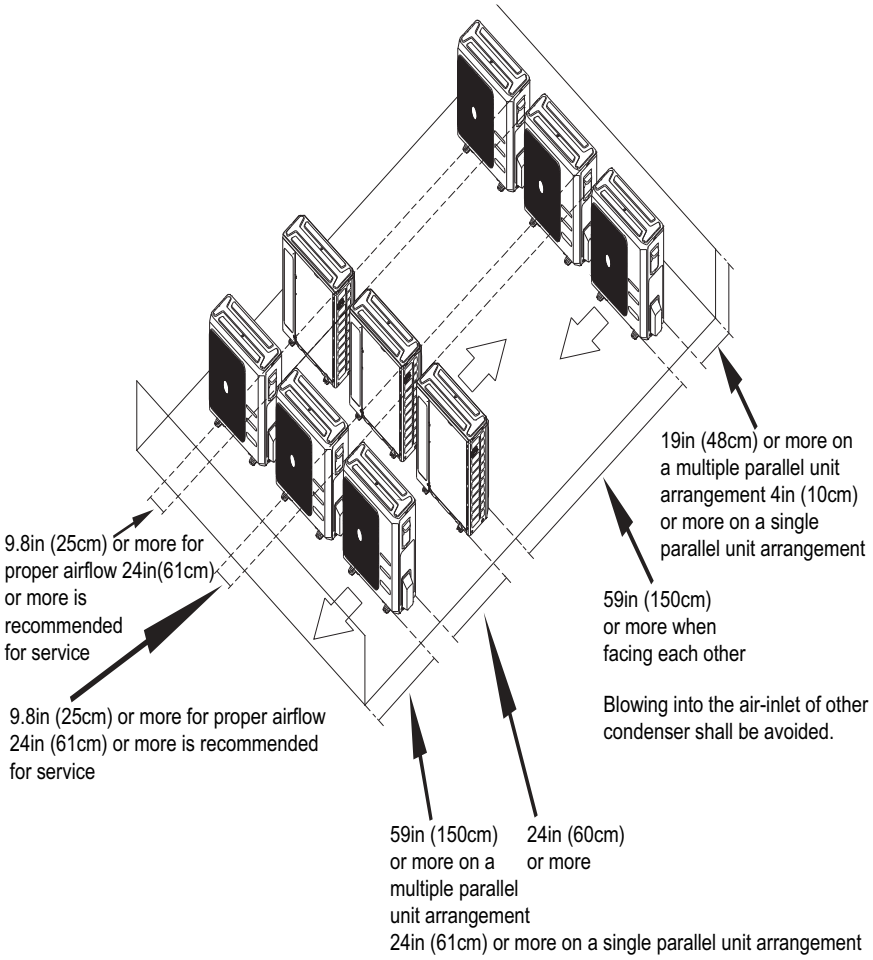

Fig. 9 — Clearances - Multiple Fan Units

INSTALLATION SUMMARY

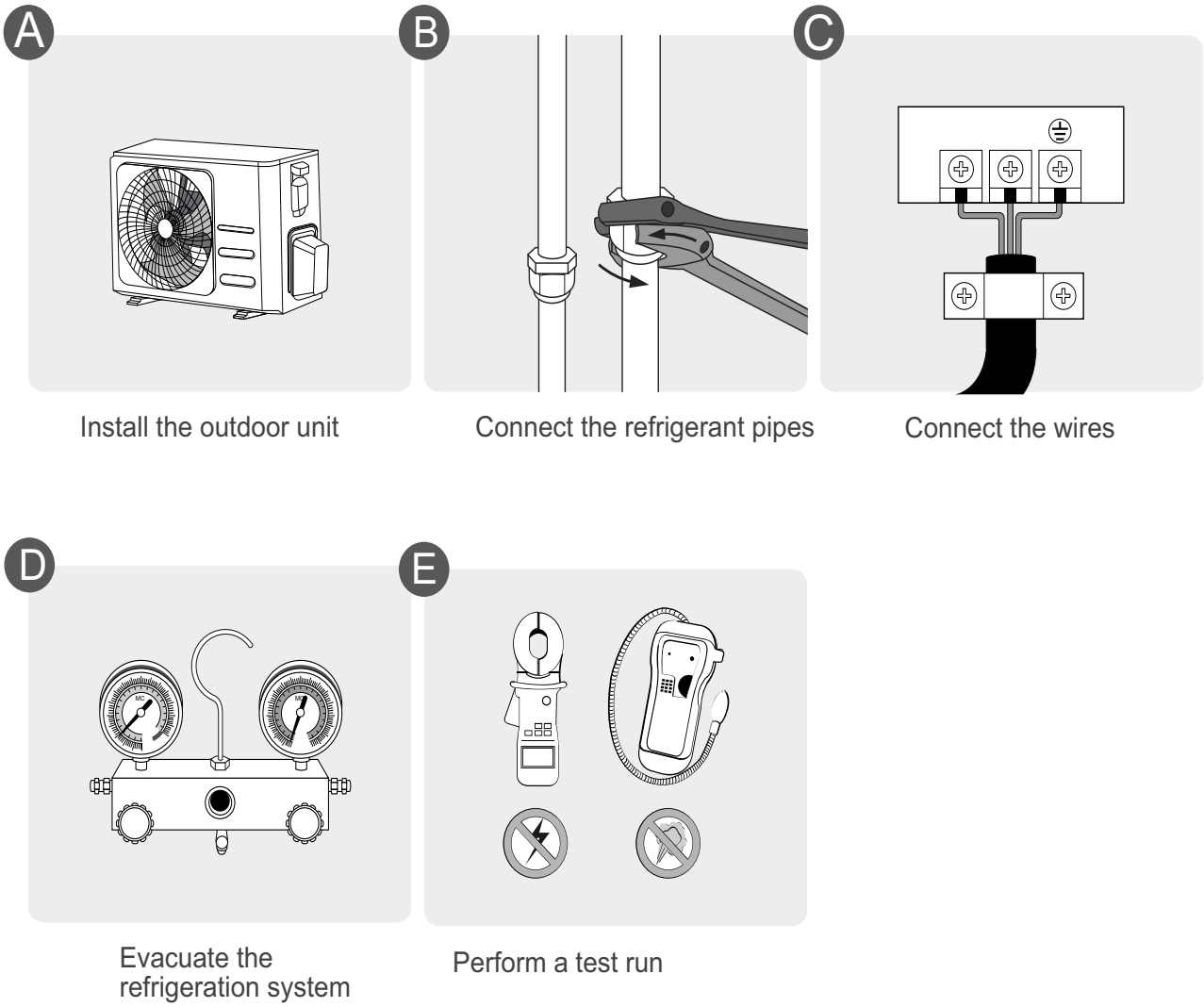

Fig. 10 — Installation Sequence

A. INSTALLATION INSTRUCTION

- A location which is convenient to installation and not exposed to strong winds.
- A location which can bear the weight of the outdoor unit and where the outdoor unit can be mounted in a level position.
- A location which provides appropriate clearances (See Fig. 7 — on page 16).
- Allow sufficient space for airflow and service of the unit. See Fig. 7 — on page 16 for the required minimum distances between the unit or walls.

NOTE: DO NOT install the indoor or outdoor units in a location with special environmental conditions. For those applications, contact your Ductless representative.

⚠ WARNING

PRODUCT INSTALLATION

Installation must be performed by an authorized dealer or specialist. A defective installation can cause water leakage, electrical shock, or fire.

The installation must be performed according to the installation instructions. Improper installation can cause water leakage, electrical shock, or fire. (In North America, installation must be performed in accordance with the requirements of NEC or CEC by authorized personnel only.)

Contact an authorized service technician for repair or maintenance of this unit. This appliance must be installed in accordance with local codes.

Only use the included accessories, parts, and specified parts for installation. Using non-standard parts can cause water leakage, electrical shock, fire, or unit failure.

To prevent exposure to wind, install the outdoor unit with its air inlet side facing the wall

Install drainage piping according to the instructions in this manual. Improper drainage may cause water damage to your home and property.

DO NOT install the unit in a location that may be exposed to combustible gas leaks. If combustible gas accumulates around the unit, it may cause a fire.

DO NOT turn on the power until all work has been completed.

When moving or relocating the system, consult experienced service technicians for the disconnection and re-installation of the unit.

NOTE: Basepan built-in with multiple holes for proper draining during defrost. For applications where it is required to seal these holes, and re-direct the condensate drain, rubber plugs are available through RCD.

Table 9 — Base Pan Rubber Plugs

OUTDOOR UNIT MODEL NUMBER PER UNIT	BASE PAN RUBBER PLUGS RCD PART NUMBER	QTY.
18K	12600801A00117	5
24K	12600801A00117	5
30K	12600801A00077	28
36K	12600801A00077	28
48K	12600801A00118	5
55K	12600801A00118	5

IMPORTANT: Both refrigerant lines must be insulated separately. Use refrigeration grade tubing ONLY. No other type of tubing may be used. Use of other types of tubing will void the manufacturer's warranty.

- The minimum refrigerant line length between the indoor and outdoor unit is 10 ft. (3m).
- When paired with Ductless indoor units, size the line sets based on the connection size of the indoor unit unless specified.
- When paired with conventional or multi-family fan coils, size the line sets based on the liquid and gas connection size of the outdoor unit; a field supplied reducer may be required.
- All outdoor units have an electronic expansion valve to manage the refrigerant flow of the fan coil connected.
- Do not open the service valves or remove the protective caps from the tubing ends until all connections are made.
- Bend the tubing with bending tools to avoid kinks and flat spots.
- Keep the tubing free of dirt, sand, moisture, and other contaminants to avoid damaging the refrigerant system.
- Avoid sags in the suction line to prevent the formation of oil traps.
- Insulate each tube with a minimum 3/8-in. (10 mm) wall thermal pipe insulation. Inserting the tubing into the insulation before making the connections saves time and improves installation quality.

WARNING - RISK OF FIRE DUE TO FLAMMABLE REFRIGERANT USED. FOLLOW HANDLING INSTRUCTIONS CAREFULLY IN COMPLIANCE WITH NATIONAL REGULATIONS.

R-454B Refrigerant Safety Group **A2L** R-454B

⚠ WARNING

All field piping must be completed by a licensed technician and must comply with the local and national regulations.
When the system is installed in a small room, measures must be taken to prevent the refrigerant concentration in the room from exceeding the safety limit in the event of refrigerant leakage. If the refrigerant leaks and its concentration exceeds its proper limit, hazards due to lack of oxygen may result.
When installing the refrigeration system, ensure that air, dust, moisture or foreign substances do not enter the refrigerant circuit. Contamination in the system may cause poor operating capacity, high pressure in the refrigeration cycle, explosion or injury.
Ventilate the area immediately if there is refrigerant leakage during the installation.
Leaked refrigerant gas is hazardous. Ensure there is no refrigerant leakage after completing the installation work.

⚠ CAUTION

DO NOT install the connecting pipe until both the indoor and outdoor units have been installed.
Insulate both the gas and liquid piping to prevent condensation.

Step 1 - Select the Installation Location

Before Installing the Outdoor Unit

The following are standards that will help choose an appropriate location for the unit.

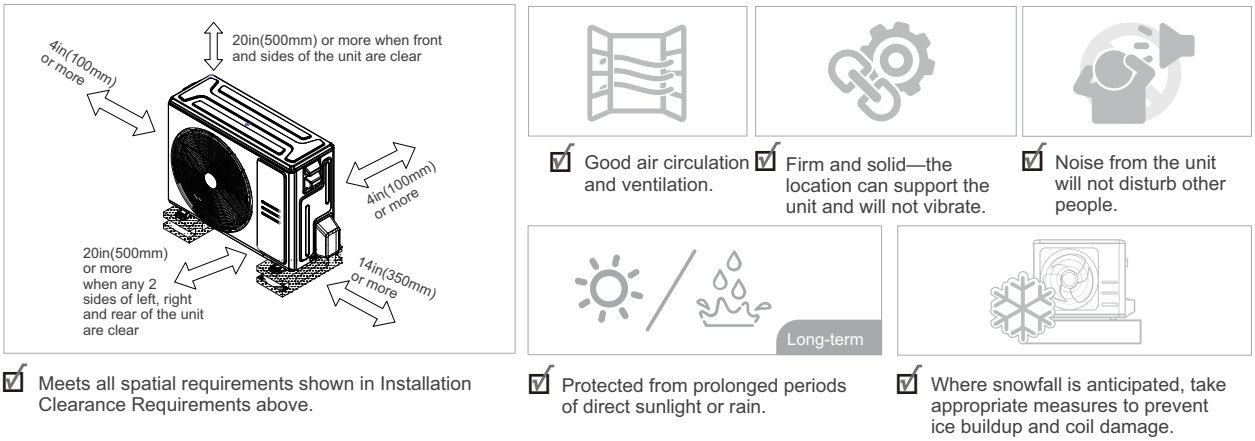

NOTE: Before installing the outdoor unit, select an appropriate location. The following details are standards designed to help select an appropriate location for the unit. Install the unit by following local codes and regulations, there may be differ slightly between different regions. Install the unit in accordance with the local codes and regulations.

Step 2 - Install the Drain Joint

NOTE: Before bolting the outdoor unit in place, you must install the drain joint at the bottom of the unit. For units with a base pan built-in (with multiple holes for proper draining during defrost), the drain joint is not needed to be installed.

1. Locate the outdoor unit's base pan hole.

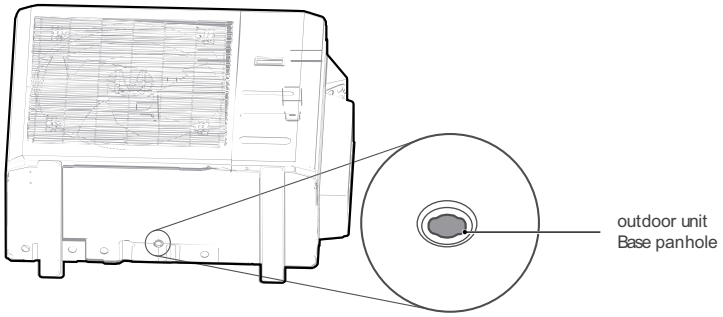

Fig. 11 — Base pan hole

2. Fit the rubber seal on the end of the drain joint that connects to the outdoor unit.

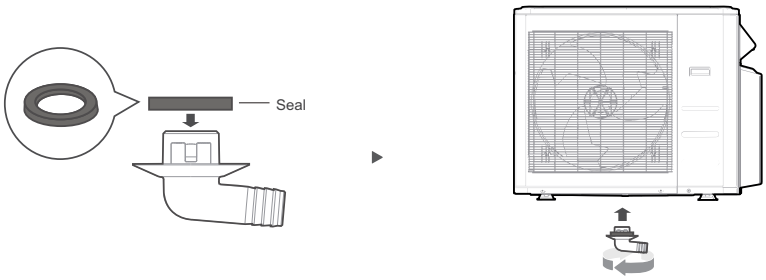

Fig. 12 — Fit the rubber seal

3. Insert the drain joint into the hole in the base pan of the unit. The drain joint "clicks" into place.
4. Connect a drain hose extension (not included) to the drain joint to redirect water from the unit during the **HEATING** mode.

NOTE: In cold climates, ensure the drain hose is as vertical as possible to ensure swift water drainage. If water drains too slowly, it can freeze in the hose and flood the unit.

Step 3 - Anchor the Outdoor Unit

WARNING

When drilling into concrete, eye protection is recommended at **all times.**

- The outdoor unit can be anchored to the ground or to a wall-mounted bracket with bolt (M10). Prepare the installation base of the unit according to Figure 13.

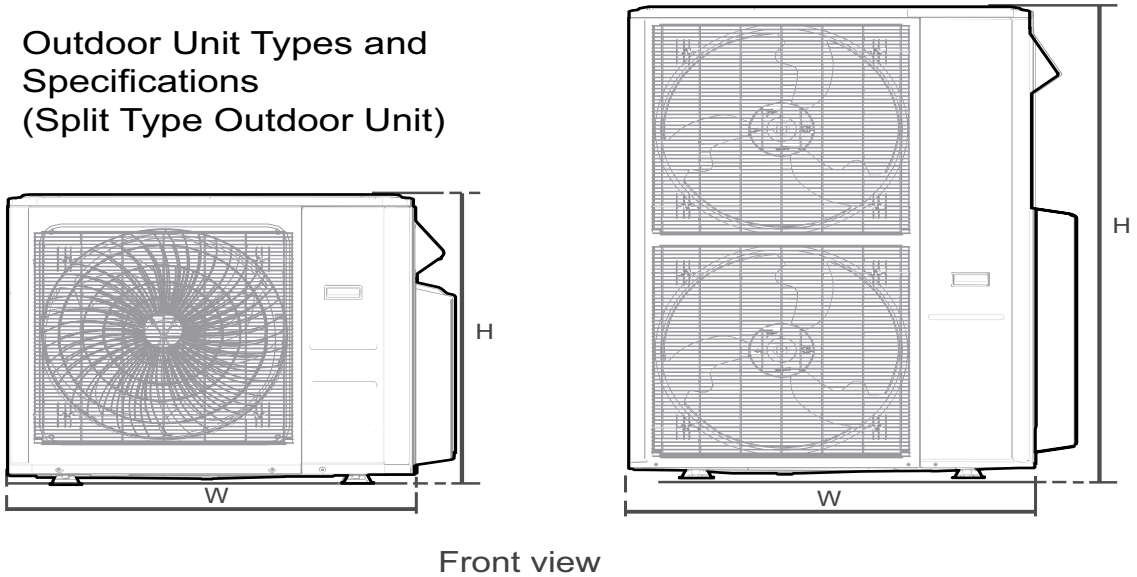

Fig. 13 — Anchor the Outdoor unit

When Selecting the 45MBAA 24K/30K/33K/36K Indoor Unit

A single 24K/30K/33K/36K indoor unit must be connected to the "A" circuit. If there are two 24K/30K/33K/36K indoor units, they must be connected with A and B circuits.

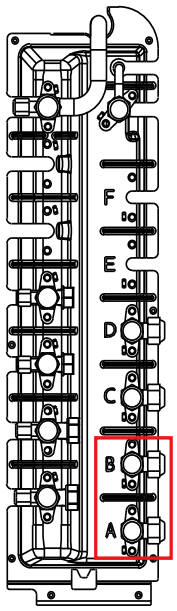

Fig. 14 — A and B Circuits

NOTE: (A,B,C,D,E circuits) If the Air Handler (45MBAA) is selected as one of the indoor units to be connected to the multi-zone outdoor unit, larger ports should be used with ports that have a 1/2 inch suction pipe diameter.

<u>If you install the unit on a wall-mounted bracket, perform the following steps.</u>

1. Mark the position of bracket holes based on the dimensions chart.
2. Pre-drill the holes for the expansion bolts.
3. Place a washer and nut on the end of each expansion bolt.
4. Thread expansion bolts through holes in the mounting brackets, put mounting brackets in position, and hammer the expansion bolts into the wall.
5. Ensure the mounting brackets are level.
6. Carefully lift unit and place its mounting feet on brackets.
7. Bolt the unit firmly to the brackets.
8. If allowed, install the unit with rubber gaskets to reduce vibrations and noise.

CAUTION

Ensure the wall is made of solid brick, concrete, or of similarly strong material. The wall must be able to support at least four times the weight of the unit.

B. REFRIGERANT CONNECTION INSTRUCTION

Use the following steps to connect the refrigerant piping:

1. Run the interconnecting piping from the outdoor unit to the indoor unit.
2. Connect the refrigerant piping and drain line outside the indoor unit. Complete the pipe insulation at the flare connection then fasten the piping and wiring to the wall as required. Completely seal the hole in the wall.
3. Cut tubing to the correct length.

   When preparing refrigerant pipes, take extra care to cut and flare them properly. This ensures efficient operation and minimizes the need for future maintenance.

   a. Measure the distance between the indoor and outdoor units.
   b. Using a pipe cutter, cut the pipe a little longer than the measured distance.
   c. Make sure the pipe is cut at a perfect 90° angle.

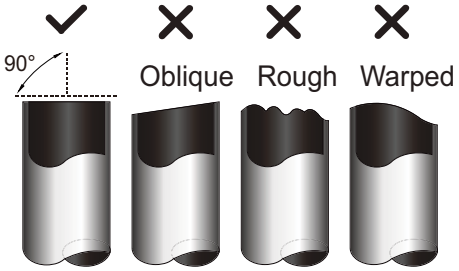

Fig. 15 —Pipe Cutting

CAUTION

DO NOT DEFORM PIPE WHILE CUTTING
Be extra careful not to damage, dent, or deform the pipe while cutting. This will drastically reduce the heating efficiency of the unit.

4. Remove Burrs

   Burrs can affect the air-tight seal of the refrigerant piping connection. Therefore, they must be completely removed.

   To remove:

   a. Hold the pipe at a downward angle to prevent burrs from falling into the pipe.
   b. Using a reamer or deburring tool, remove all burrs from the cut section of the pipe.

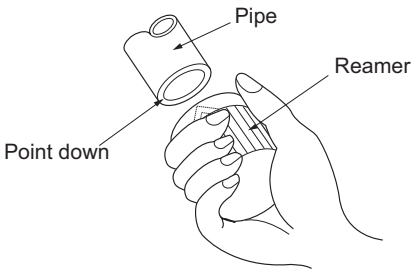

Fig. 16 — Deburring Tool

5. Flare Pipe Ends

   Proper flaring is essential to achieving an airtight seal.

   a. After removing the burrs from the cut pipe, seal the ends with PVC tape to prevent foreign materials from entering the pipe.
   b. Sheath the pipe with insulating material.
   c. Place factory flare nut on pipe facing the proper direction. Make sure they are facing the right direction. Once the ends are flared, it is impossible to put them on or change their direction.

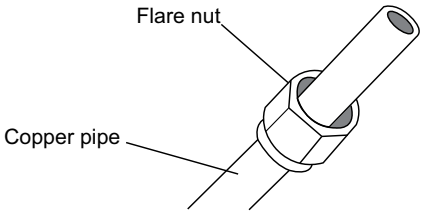

Fig. 17 — Copper pipe and flare nut

   d. Remove the PVC tape from ends of pipe when ready to perform the flaring work.
   e. Clamp the flare block on the end of the pipe. The end of the pipe must extend beyond the flare form.

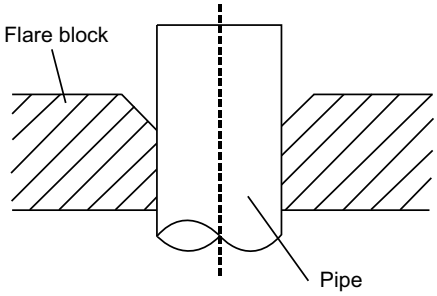

Fig. 18 — Flare Block

   f. Place the flaring tool onto the form.
   g. Turn the handle of the flaring tool clockwise until the pipe is fully flared. Flare the pipe in accordance with the dimensions in Table 10.

Table 10 — Flare Nut Spacing

OUTER DIAMETER IN (MM)	A" IN (MM)	
	MIN.	MAX.
Ø 1/4in (Ø 6.35mm)	0.0275in (0.7mm)	0.05in (1.3mm)
Ø 3/8in (Ø 9.52mm)	0.04in (1.0mm)	0.063in (1.6mm)
Ø1/2in (Ø 12.7mm)	0.04in (1.0mm)	0.07in (1.8mm)
Ø 5/8in (Ø 16mm)	0.078in (2.0mm)	0.086in (2.2mm)
Ø 3/4in (Ø 19mm)	0.078in (2.0mm)	0.094in (2.4mm)

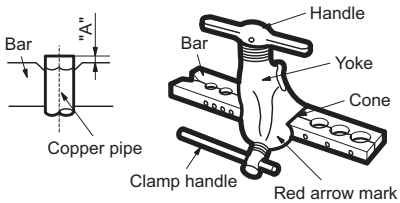

Fig. 19 — Flare Nut Spacing

   h. Remove the flaring tool and flare block, then inspect the end of the pipe for cracks and even flaring.

6. Connect the Pipes

   Connect the copper pipes to the indoor unit first, then connect the pipes to the outdoor unit. Connect the low-pressure pipe first, then connect the high pressure pipe.

   a. Align the center of the two pipes that you will connect.

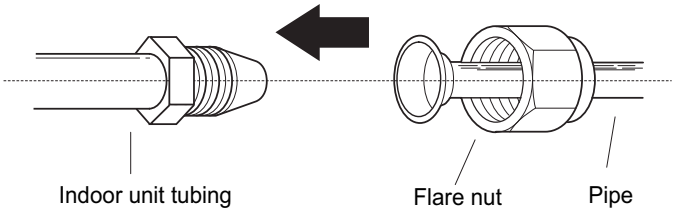

Fig. 20 — Align the center of the two pipes

b. Tighten the flare nut as much as possible by hand.
c. Using a wrench, grip the nut on the unit tubing.
d. While firmly gripping the nut, use a torque wrench to tighten the flare nut according to the torque values listed in Table 11.

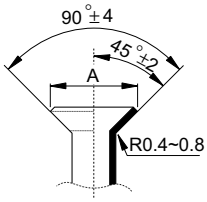

Fig. 21 — Flare Shape

Table 11 — Tightening Torque

BRASS FLARE SIZES	RECOMMENDED SEATING TORQUE FOR BRASS FLARE NUTS		FLARE DIMENSIONS (A) (INCH/MM)	
In (mm)	Ft-Lbs	N-M	Min	Max
Ø1/4 (6.35)	13.3-14.7	18-20	0.33/8.4	0.34/8.7
Ø3/8 (9.52)	23.6-28.8	32-39	0.52/13.2	0.53/13.5
Ø1/2 (12.7)	36.1-42.8	49-59	0.64/16.2	0.65/16.5
Ø5/8 (16)	42-52.4	57-71	0.76/19.2	0.78/19.7
Ø3/4 (19)	49.4-74.5	67-101	0.91/23.2	0.93/23.7
Ø7/8 (22)	62.7-81.1	85-110	1.04/26.4	1.06/26.9

NOTE: Use both a backup wrench and a torque wrench when connecting or disconnecting pipes to or from the unit.

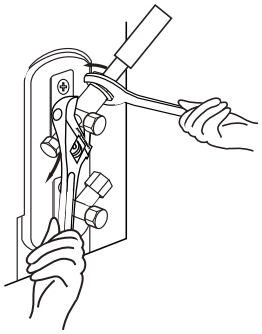

Fig. 22 — Torque wrench with backup wrench

⚠ CAUTION

Wrap insulation around the piping. Direct contact with the bare piping may result in burns or frostbite. Ensure the pipe is properly connected. Over tightening may damage the bell mouth and under tightening may lead to leakage.

All tubing bends should be performed with a properly sized tubing bender to prevent kinking or damaging the tubing.

e. After connecting the copper pipes to the indoor unit, wrap the power cable, signal cable and the piping together with binding tape.

NOTE: While bundling these items together, DO NOT intertwine or cross the signal cable with any other wiring.

f. Thread this lineset through the wall and connect it to the outdoor unit.
g. Insulate all piping, including the outdoor unit valves.

NOTE: DO NOT open the service valves until pressure test is complete.

7. Pressure Test Piping

⚠ CAUTION

Only use Dry Nitrogen to pressure test refrigerant systems. Use of other gases can result in injury, property damage or death.

NOTE: Use refrigeration gauges that are pressure rated for R454b refrigerant.

a. Attach low side gauge hose to the 5/16” Schrader valve on the outdoor unit service valve.
b. Attach the charging hose to the regulator on the dry nitrogen tank.
c. Preset the nitrogen regulator to 550 psi.
d. Slowly pressurize the line set until the low side gauge reads 500 psi. Do not exceed 550 psi.
e. Close all the valves on the nitrogen tank and gauges.
f. Allow the pressure test to stand for a minimum of 30 minutes.
g. If the pressure holds, release the nitrogen and proceed. Review “E. AIR EVACUATION” on page 29.

If the pressure goes down in the 30 minute delay, leak check the tubing and flare fittings to identify the source of the leak. Return to Step C, above.

C. PIPE LENGTH AND DROP HEIGHT

Ensure the length of the refrigerant pipe and the drop height between the indoor and outdoor units meets the requirements shown in Table 12.

Table 12 — Refrigerant Piping

	37MGHAQ18CA3	37MGHAQ24DA3	37MGHAQ30EA3 37MGHAQ36EA3	37MGHAQ48FA3 37MGHAQ55FA3
Max. number of indoor units	3	4	5	6
Max. length for all rooms (ft/m)	197/60	262/80	262/80	262/80
Max. length per each indoor unit (ft/m)	98/30	115/35	115/35	115/35
Max. height difference between indoor and outdoor unit (ft/m)	49/15	49/15	49/15	49/15
Max. height difference between indoor units (ft/m)	33/10	33/10	33/10	33/10

CAUTION

EQUIPMENT DAMAGE HAZARD

Refrigerant pipe diameter is different according to indoor unit to be connected. When using the extension pipe, refer to the tables below.

When refrigerant pipe diameter is different from that of outdoor unit union, additional transfer connector needs to be used on outdoor unit.

Table 13 — Pipe Diameter

INDOOR UNIT		
Model	Pipe diameter (inch (mm))	
18K	Liquid	3x1/4in(3x6.35mm)
	Gas	3x3/8in(3x9.52mm)
24K	Liquid	4x1/4in(4x6.35mm)
	Gas	3x3/8in+1x1/2in (3x9.52mm+1x12.7mm)
30K	Liquid	5x1/4in(5x6.35mm)
	Gas	3x3/8in+2x1/2in (3x9.52mm+2x12.7mm)
48K, 55K	Liquid	6x1/4in(6x6.35mm)
	Gas	4x3/8in+2x1/2in (4x9.52mm+2x12.7mm)

NOTE: Adapters for the outdoor units are listed in Table 14.

Table 14 — Outdoor Unit

MODEL	PIPE DIAMETER (INCH (MM))		ADAPTER (INCH (MM))	QTY
37MGHAQ18CA3	Liquid	Φ1/4 (6.35)*3	Φ3/8 (Φ9.52)-->Φ1/2 (Φ12.7) Φ1/2 (Φ12.7)-->Φ5/8 (Φ16)	2 1
	Gas	Φ3/8 (Φ9.52)*3		
37MGHAQ24DA3	Liquid	Φ1/4 (6.35)*4	Φ1/4 (Φ6.35)-->Φ3/8 (Φ9.52) Φ1/2 (Φ12.7)-->Φ5/8 (Φ16) Φ3/8 (Φ9.52)-->Φ1/2 (Φ12.7) Φ1/2 (Φ12.7)-->Φ3/8 (Φ9.52)	1 1 1 1
	Gas	Φ3/8 (Φ9.52)*3		
		Φ1/2 (Φ12.7)*1		
37MGHAQ30EA3 37MGHAQ36EA3	Liquid	Φ1/4 (6.35)*5	Φ1/4 (Φ6.35)-->Φ3/8 (Φ9.52) Φ1/2 (Φ12.7)-->Φ5/8 (Φ16) Φ3/8 (Φ9.52)-->Φ1/2 (Φ12.7) Φ1/2 (Φ12.7)-->Φ3/8 (Φ9.52)	2 2 1 2
	Gas	Φ3/8 (Φ9.52)*3		
		Φ1/2 (Φ12.7)*2		
37MGHAQ48FA3 37MGHAQ55FA3	Liquid	Φ1/4 (6.35)*6	Φ1/4 (Φ6.35)-->Φ3/8 (Φ9.52) Φ1/2 (Φ12.7)-->Φ5/8 (Φ16) Φ3/8 (Φ9.52)-->Φ1/2 (Φ12.7) Φ1/2 (Φ12.7)-->Φ3/8 (Φ9.52)	2 2 1 2
	Gas	Φ3/8 (Φ9.52)*4		
		Φ1/2 (Φ12.7)*2		

D. WIRING INSTRUCTION

All wires must be sized per NEC (National Electrical Code) or CEC (Canadian Electrical Code) and local codes. Use Electrical Data table MCA (minimum circuit amps) and MOCP (maximum over current protection) to correctly size the wires and the disconnect fuse or breakers respectively.

Power and Communication Wiring: The main power is supplied to the outdoor unit. The field supplied 14/3 power/communication wiring, from the outdoor unit to the indoor unit, consists of four (4) wires and provides the power for the indoor unit. Two wires are high voltage AC power, one is communication wiring and the other is a ground wire.

To minimize communication interference: If installed in a high Electromagnetic field (EMF) area and communication issues arise, a 14/2 stranded shielded wire can be used to replace 2 (L2/N) and 3 (S) between the outdoor and indoor units - landing the shield onto the ground in the outdoor unit only.

Table 15 — Wiring Sizes

CABLE	CABLE SIZE	REMARKS
Connection Cable	14AWG	3 wire + Ground 1Φ 208/230 V (Stranded wire is recommended)

⚠ WARNING

EQUIPMENT DAMAGE HAZARD

Failure to follow this caution may result in equipment damage or improper operation. Wires should be sized based on NEDC and local codes.

⚠ CAUTION

EQUIPMENT DAMAGE HAZARD

Failure to follow this caution may result in equipment damage or improper operation. Be sure to comply with local codes while running wire from the indoor unit to the outdoor unit. Every wire must be connected firmly. Loose wiring may cause the terminal to overheat or result in unit malfunction. A fire hazard may also exist. Ensure all wiring is tightly connected.

No wire should touch the refrigerant tubing, compressor or any moving parts. Disconnecting means must be provided and shall be located within sight and readily accessible from the air conditioner. Connecting cable with conduit shall be routed through the hole in the conduit panel.

Electrical and Gas Leaks

⚠ WARNING

BEFORE TEST RUN

Only perform test run after you have completed the following steps:

Electrical Safety Checks – Confirm that the unit's electrical system is safe and operating properly

Gas Leak Checks – Check all flare nut connections and confirm that the system is not leaking

Confirm that gas and liquid (high and low pressure) valves are fully open.

ELECTRICAL DATA

Table 16 — Electrical Data

OUTDOOR UNIT		18K	24K	30K	36K	48K	55K
		(208/230V)	(208/230V)	(208/230V)	(208/230V)	(208/230V)	(208/230V)
Minimum Circuit Ampacity (MCA)	A	17.5	30	37	37	43.0	43.0
Maximum Overcurrent Protection Ampacity (MOPA)	A	20	35	40	40	45.0	45.0
Voltage-Phase-Frequency		208/230-1-60					
Max – Min Voltage Range *		253-187					

*Permissible limits of the voltage range at which the unit will operate satisfactorily.

LEGEND
FLA - Full Load Amps
MCA - Minimum Circuit Amps
MOP- Maximum Overcurrent Protection

WIRING PRECAUTIONS

WARNING

Before performing any electrical work, read these warnings.

- All wiring must comply with local and national electrical codes, regulations and must be installed by a licensed electrician.
- All electrical connections must be made according to the Electrical Connection Diagram located on the panels of the indoor and outdoor units.
- If there is a serious safety issue with the power supply, stop work immediately. Explain your reasoning to the client, and refuse to install the unit until the safety issue is properly resolved.
- Power voltage should be within 90-110% of rated voltage. Insufficient power supply can cause malfunction, electrical shock, or fire.
- Installation of an external surge suppressor at the outdoor disconnect is recommended.
- If connecting power to fixed wiring, a switch or circuit breaker that disconnects all poles and has a contact separation of at least 1/8in (3mm) must be incorporated in the fixed wiring. The qualified technician must use an approved circuit breaker or switch.
- Only connect the unit to an individual branch circuit. Do not connect another appliance to that outlet.
- Make sure to properly ground the air conditioner.
- Every wire must be firmly connected. Loose wiring can cause the terminal to overheat, resulting in product malfunction and possible fire.
- Do not let wires touch or rest against refrigerant tubing, the compressor, or any moving parts within the unit.
- If the unit has an auxiliary electric heater, it must be installed at least 40in (1m) away from any combustible materials.
- To avoid getting an electric shock, never touch the electrical components soon after the power supply has been turned off. After turning off the power, always wait 10 minutes or more before you touch the electrical components.
- Make sure that you do not cross your electrical wiring with your signal wiring. This may cause distortion, interference or possibly damage to circuit boards.
- No other equipment should be connected to the same power circuit.
- Connect the outdoor wires before connecting the indoor wires.

WARNING

Before performing any electrical work to wiring work, turn off the main power to the system, read these warnings.

OUTDOOR UNIT WIRING

WARNING

Before performing any electrical or wiring work, turn off the main power to the system.

1. Prepare the cable for connection
   a. You must first choose the right cable size.

NOTE: Choose the cable type according to the local electrical codes and regulations.

CHOOSE THE RIGHT CABLE SIZE

The size of the power supply cable, signal cable, fuse, and switch needed is determined by the maximum current of the unit. The maximum current is indicated on the nameplate located on the side panel of the unit. Refer to this nameplate to choose the right cable, fuse, or switch.

NOTE: Select the right cable size according to the Minimum Circuit Ampacity indicated on the nameplate of the unit.

   b. Using wire strippers, strip the rubber jacket from both ends of the signal cable to reveal approximately 5.9in (150mm) of wire.
   c. Strip the insulation from the ends.
   d. Using a wire crimper, crimp the u-lugs on the ends.

NOTE: When connecting the wires, strictly follow the wiring diagram found inside the electrical box cover.

2. Remove the electric cover of the outdoor unit. If there is no cover on the outdoor unit, take off the bolts from the maintenance board and remove the protection board.

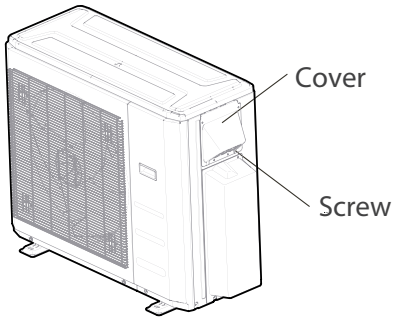

Fig. 23 — Outdoor Unit

3. Connect the u-lugs to the terminals. Match the wire colors/labels with the labels on the terminal block. Firmly screw the u-lug of each wire to its corresponding terminal.
4. Clamp down the cable with the cable clamp.
5. Insulate unused wires with electrical tape. Keep them away from any electrical or metal parts.
6. Reinstall the cover of the electric control box.

CAUTION

Connect the connective cables to the terminals, as identified, with their matching numbers on the terminal block of the indoor and outdoor units. For example, Terminal L1(A) of the outdoor unit must connect with terminal L1/1 on the indoor unit. The outdoor unit can match different types of indoor unit, the numbers on the terminal block of the indoor unit may be slightly different. Please pay special attention while connecting the wire.

TERMINAL CONNECTIONS

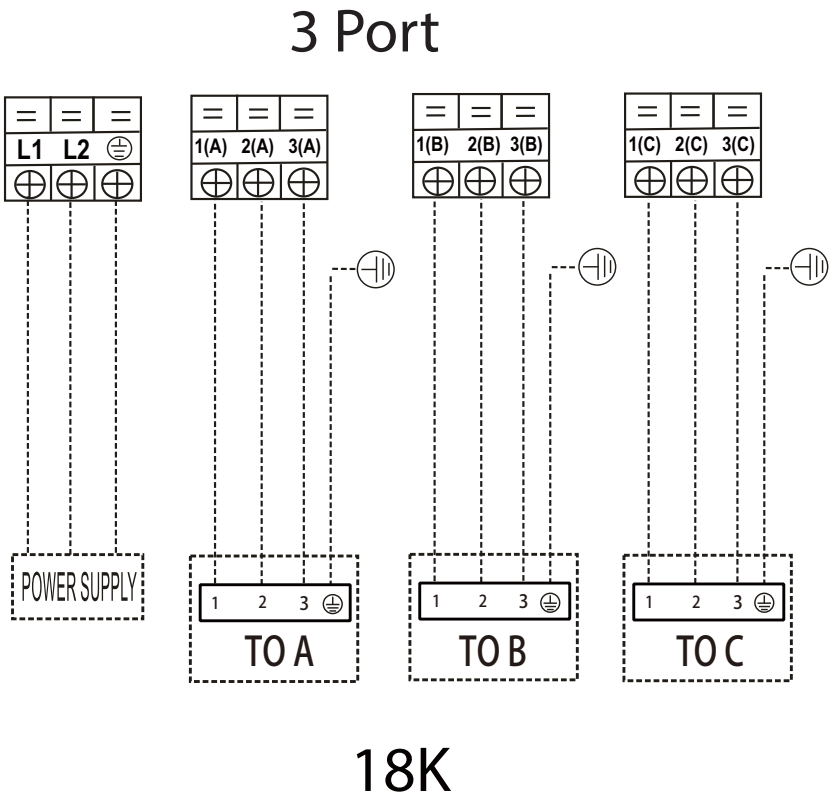

Fig. 24 —Terminal Connections

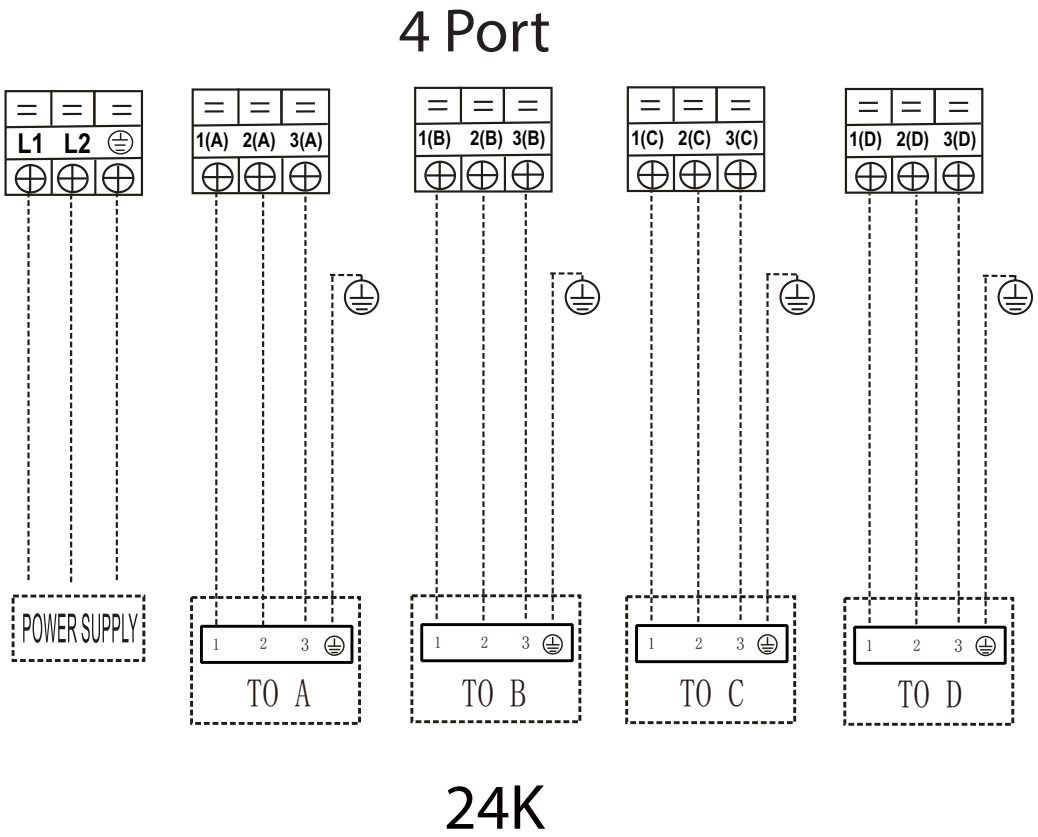

Fig. 25 — Terminal Connections

5 Port

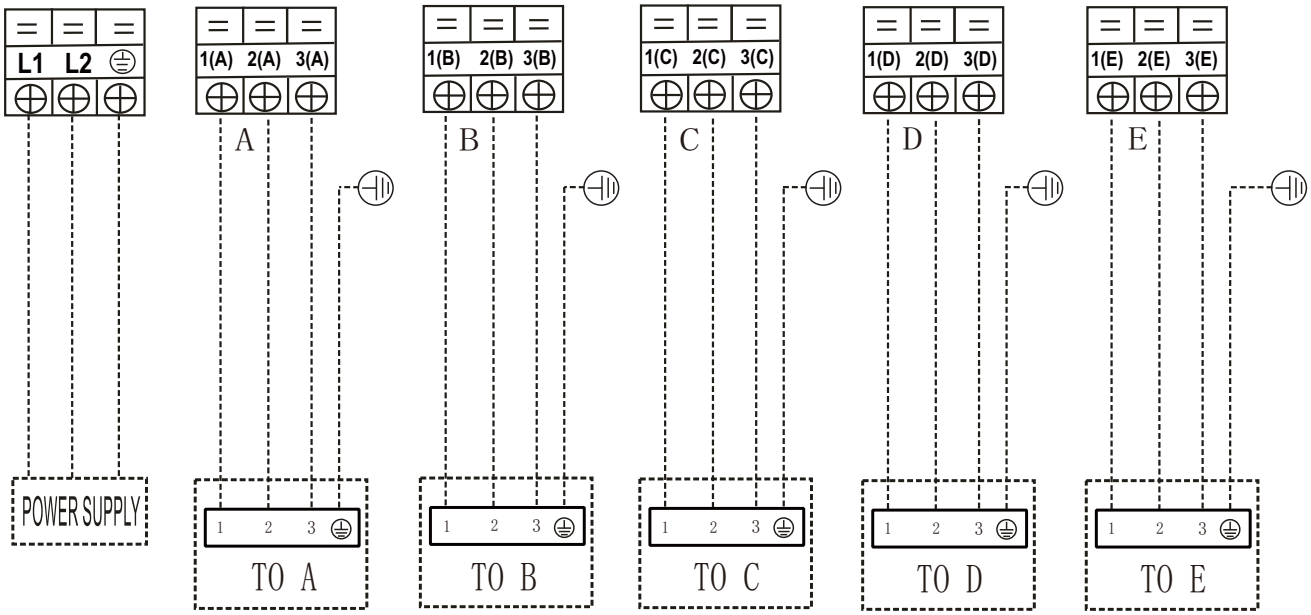

30 and 36K

Fig. 26 — Terminal Connections

6 Port

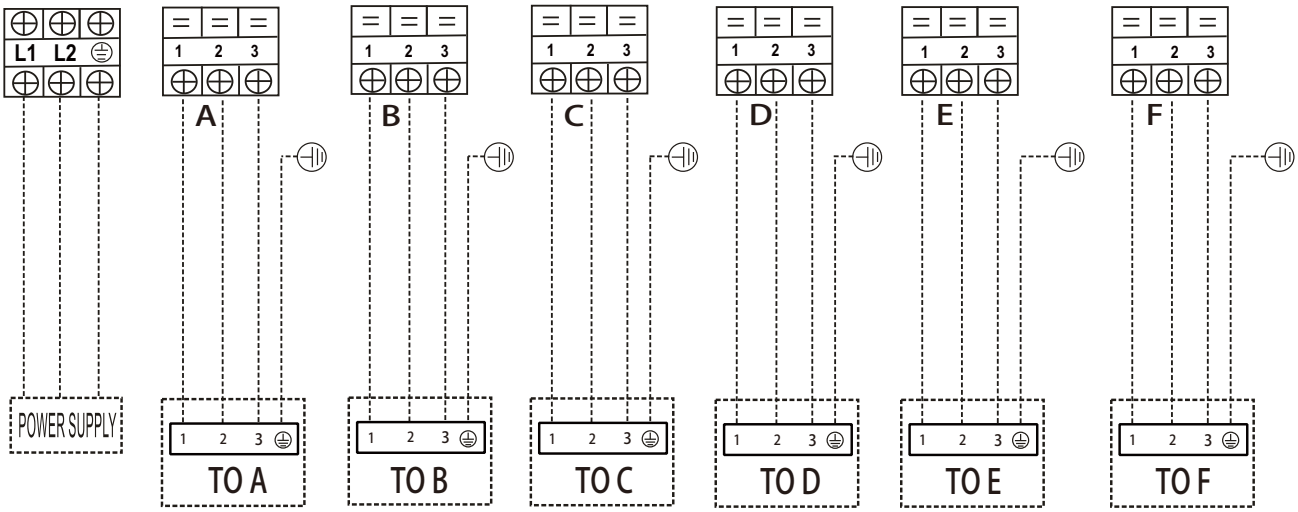

48K and 55K

Fig. 27 — Terminal Connections

⚠ CAUTION

After confirmation of the above conditions, follow these guidelines when performing wiring:

- Always have an individual power circuit specifically for the air conditioner. Always follow the circuit diagram posted on the inside of the control cover.
- Screws fastening the wiring in the casing of electrical fittings may come loose during transportation. Because loose screws may cause wire burn-out, check that the screws are tightly fastened.
- Check the specifications for the power source.
- Confirm that electrical capacity is sufficient.
- Confirm that starting voltage is maintained at more than 90 percent of the rated voltage marked on the name plate.
- Confirm that the cable thickness is as specified in the power source specifications.
- Always install an earth leakage circuit breaker in wet or moist areas.
- The following can be caused by a drop in voltage: vibration of a magnetic switch, damaging the contact point, broken fuses, and disturbance of normal functioning.
- Disconnection from a power supply must be incorporated into the fixed wiring. It must have an air gap contact separation of at least 3mm in each active (phase) conductors.
- Before accessing terminals, all supply circuits must be disconnected.

NOTE: To satisfy the EMC compulsory regulations, which is required by the international standard CISPR14-1:2005/A2:2011 in specific countries or districts, make sure you apply the correct magnetic rings on your equipment according to the wiring diagram that adhere to the your equipment.

E. AIR EVACUATION

NOTE: When opening valve stems, turn the hexagonal wrench until it hits against the stopper. Do not try to force the valve to open further.

PREPARATION AND PRECAUTION

Air and foreign matter in the refrigerant circuit can cause abnormal rises in pressure, which can damage the air conditioner, reduce its efficiency, and cause injury. Use a vacuum pump and manifold gauge to evacuate the refrigerant circuit, removing any non-condensable gas and moisture from the system. Evacuation should be performed upon initial installation and when unit is relocated.

BEFORE PERFORMING EVACUATION

- ☑ Check to make sure the connective pipes between the indoor and outdoor units are connected properly .
- ☑ Check to make sure all wiring is connected properly.

EVACUATION INSTRUCTIONS

1. You can choose to evacuate all indoor unit systems directly through the main valve, which requires opening all branch valves of connected indoor units, or evacuate each indoor unit system sequentially through the corresponding branch valve, which requires opening the main valve.
2. Connect the charge hose of the manifold gauge to the service port on the outdoor unit's low pressure valve.
3. Connect another charge hose from the manifold gauge to the vacuum pump.
4. Open the Low Pressure side of the manifold gauge. Keep the High Pressure side closed.

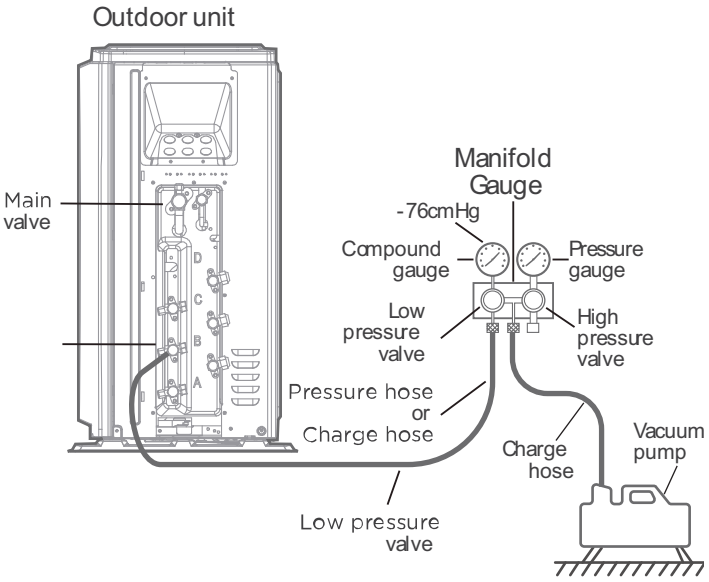

Fig. 28 —Evacuation Instructions - Outdoor Unit

5. Turn on the vacuum pump to evacuate the system.
6. Run the vacuum for at least 15 minutes when choosing evacuation from each branch valve, or until the Compound Meter reads -76cmHG (-105Pa). When choosing evacuation through the main valve, run the vacuum for at least 30 minutes.
7. Close the Low Pressure side of the manifold gauge, and turn off the vacuum pump.
8. Wait for 5 minutes, then check that there has been no change in system pressure.
9. If there is a change in system pressure, refer to Gas Leak Check section for information on how to check for leaks. If there is no change in system pressure, unscrew the cap from the packed valve (high pressure valve).
10. Insert hexagonal wrench into the packed valve (high pressure valve) and open the valve by turning the wrench in a 1/4 counterclockwise turn. Listen for gas to exit the system, then close the valve after 5 seconds.
11. Watch the Pressure Gauge for one minute to make sure that there is no change in pressure. The Pressure Gauge should read slightly higher than atmospheric pressure.
12. Remove the charge hose from the service port.

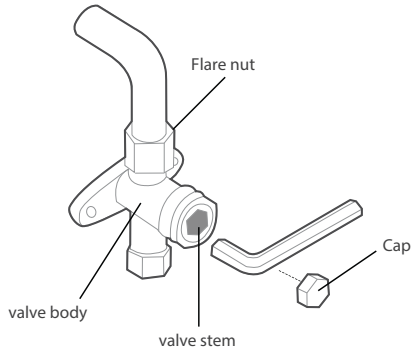

Fig. 29 —Evacuation Instructions

Fig. 30 — Service Port

13. Using a hexagonal wrench, fully open both the high pressure and low pressure valves.
14. Tighten valve caps on all three valves (service port, high pressure, low pressure) by hand. You may tighten it further using a torque wrench if needed.

Deep Vacuum Method

The deep vacuum method requires a vacuum pump capable of pulling a vacuum of 500 microns and a vacuum gauge capable of accurately measuring this vacuum depth. The deep vacuum method is the most positive way of assuring a system is free of air and liquid water (Fig. 31).

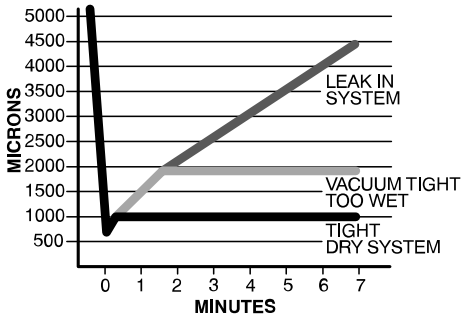

A22025

Fig. 31 — Deep Vacuum Method

Triple Evacuation Method

The triple evacuation is the recommended method of dehydration. Refer to Fig. and proceed as follows:

1. Pump the system down to 1500 microns and allow the pump to continue operating for an additional 15 minutes.
2. Close the service valves and shut off the vacuum pump.
3. Connect a dry nitrogen cylinder and regulator to the system and break vacuum until the system reaches 2 psig.
4. Close the service valve and allow the system to stand for 1 hr. During this time, the dry nitrogen can diffuse throughout the system absorbing moisture.
5. Pump the system down to 1000 microns.
6. Break the vacuum with dry nitrogen (2 psig).
7. Pump the system down to 500 microns.
8. Perform the hold test for 30 minutes.

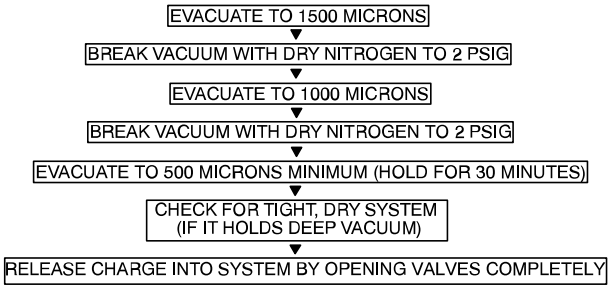

A22026

Fig. 32 — Triple Evacuation Method

NOTE ON ADDING REFRIGERANT

CAUTION

Refrigerant charging must be performed after wiring, vacuuming, and the leak testing.

DO NOT exceed the maximum allowable quantity of refrigerant or overcharge the system. Doing so can damage the unit or impact it's functioning.

Charging with unsuitable substances may cause explosions or accidents. Ensure that the appropriate refrigerant is used.

Refrigerant containers must be opened slowly. Always use protective gear when charging the system.

DO NOT mix refrigerants types.

Depending on the length of connective piping or the pressure of the evacuated system, you made need to add refrigerant. Refer to Table 17.

Table 17 — Additional Refrigerant Per Pipe Length

CONNECTIVE PIPE LENGTH (M)		AIR PURGING METHOD	ADDITIONAL REFRIGERANT		
Less than standard pipe length * N		Vacuum Pump	N/A		
Greater than standard pipe length * N			Liquid Side: Ø 1/4 in (Ø 6.35) R-454B (Total pipe length - standard length * N) x0.16oz / ft (15g / m)		
Add .16 Oz (4.5 g) of additional refrigerant for every foot (meter) of system piping over the standard length, per unit size as shown below					
18K	**24K**	**30K**	**36K**	**48K**	**55K**
73.8 ft (22.5 m)	98.4 ft (30.0 m)	123 ft (37.5 m)	123 ft (37.5 m)	147.6 ft (45.0 m)	147.6 ft (45.0 m)

NOTE:

- **Example: 18K unit with 3 indoor highwalls:**
  – N = 3. Standard length = 25 feet.
  – Total pipe length (measure length of all 3 liquid lines) = 84 feet.
  – 84 - 75 = 9 x 0.16 = 1.44 oz extra refrigerant
- **Refer to Table 12 for maximum refrigerant pipe lengths.**
- **The standard pipe length for each indoor unit is 24.6ft/7.5m.**
- **N=3 18K, N=4 24K, N=5 30K & 36K,**
- **N=6 48K & 55K.**
- **Additional 17.6 oz (0.5 kg) refrigerant shall be added when AHU units are used in system.**

SAFETY AND LEAKAGE CHECK

Electrical Safety Check

Perform the electrical safety check after completing installation. Cover the following areas:

1. **Insulated resistance:** The insulated resistance must be more than 2MΩ.
2. **Grounding work:** After finishing grounding work, measure the grounding resistance by visual detection and using the grounding resistance tester. Make sure the grounding resistance is less than 4Ω.
3. **Electrical leakage check (performing during test while unit is on):** During a test operation after completed installation, the use the electroprobe and multimeter to perform an electrical leakage check. Turn off the unit immediately if leakage happens. Try and evaluate different solutions until the unit operates properly.

Gas Leak Check

1. **Soap water method:** Apply a soap-water solution or a liquid neutral detergent on the indoor unit connection or outdoor unit connections with a soft brush to check for leakage of the connecting points of the piping. If bubbles emerge, the pipes are experiencing leakage.
2. **Leak detector:** Use the leak detector to check for leakage.

F. TEST RUN

⚠ CAUTION

Failure to perform the test run may result in unit damage, property damage, or personal injury.

Before Test Run

A test run must be performed after the entire system has been completely installed. Confirm the following points before performing the test:

a. The indoor and outdoor units are properly installed.
b. Piping and wiring are properly connected.
c. No obstacles near the inlet and outlet of the unit that might cause poor performance or product malfunction.
d. The refrigeration system does not leak.
e. Drainage system is unimpeded and draining to a safe location.
f. The heating insulation is properly installed.
g. The grounding wires are properly connected.
h. Length of the piping and additional refrigerant stow capacity have been recorded.
i. The power voltage is the correct voltage for the air conditioner.

Test Run Instructions

1. Open both the liquid and gas stop valves.
2. Turn on the main power switch and allow the unit to warm up.
3. Set the air conditioner to COOL mode.
4. For the Indoor Unit
   a. Ensure the remote control and its buttons work properly.
   b. Ensure the louvers move properly and can be changed using the remote control.
   c. Double check to see if the room temperature is being registered correctly.
   d. Ensure the indicators on the remote control and the display panel on the indoor unit work properly.
   e. Ensure the manual buttons on the indoor unit works properly.
   f. Check to see that the drainage system is unimpeded and draining smoothly.
   g. Ensure there is no vibration or abnormal noise during operation.
5. For the Outdoor Unit
   a. Check to see if the refrigeration system is leaking.
   b. Make sure there is no vibration or abnormal noise during operation.
   c. Ensure the wind, noise, and water generated by the unit do not disturb your neighbors or pose a safety hazard.

NOTE: If the unit malfunctions or does not operate according to your expectations, refer to the Troubleshooting section of the Owner's Manual before calling customer service.

Function of Automatic Wiring/Piping Correction

More recent models now feature automatic correction of wiring/piping errors. Press the "check switch" on the outdoor unit PCB board for 5 seconds until the LED displays "CE", indicating that this function is working, Approximately 5-10 minutes after the switch is pressed, the "CE" disappears, meaning that the wiring/piping error is corrected and all wiring/piping is properly connected.

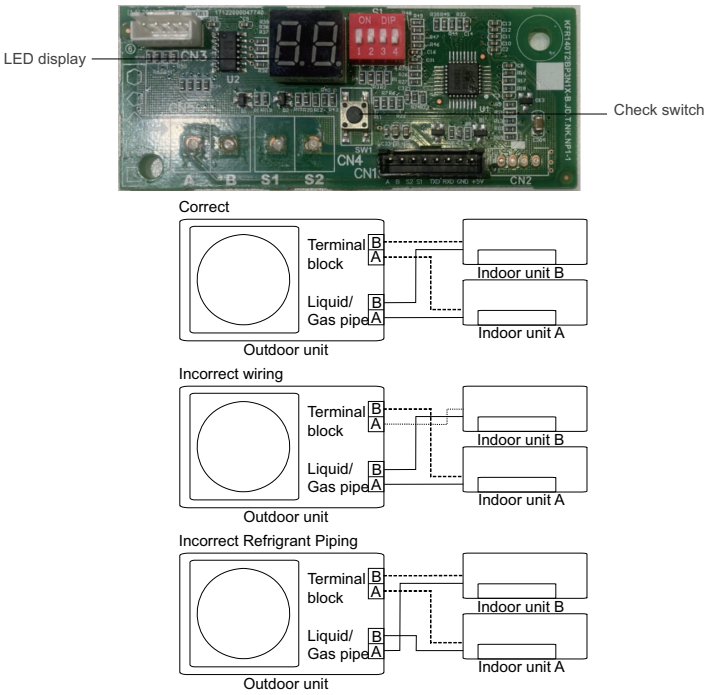

How to Activate this Function

1. Check that outside temperature is above 41°F (5°C).

   (This function does not work when outside temperature is not above 41°F (5°C)
2. Check that the stop valves of the liquid pipe and gas pipe are open.
3. Turn on the breaker and wait at least 2 minutes.
4. Press the check switch on the outdoor PCB board unit LED display "CE".

Operating Conditions

When your air conditioner is used outside of the following temperature ranges, certain safety protection features may activate and cause the unit to disable.

Table 18 — Operating Temperature

	COOL MODE	HEAT MODE	DRY MODE
ROOM TEMP.	60°F~90°F (16°C~32°C)	32°F~86°F (0°C~30°C)	50°F~90°F (10°C~32°C)
OUTDOOR TEMP.	-22°F~122°F (-30°C~50°C) For Hyper Heat models	-22°F~75°F (-30°C~24°C) For Hyper Heat models	32°F~122°F (0°C~50°C)

FOR OUTDOOR UNITS OPERATING IN COLD AMBIENT CONDITIONS

When outside temperature is below 32°F (0°C), we strongly recommend keeping the unit powered on at all time to ensure smooth ongoing performance.

NOTE: Room relative humidity less than 80%. If the air conditioner operates in excess of this figure, the surface of the air conditioner may attract condensation. Please sets the vertical air flow louver to its maximum angle (vertically to the floor), and set HIGH fan mode.

To further optimize the performance of your unit, do the following:

- Keep doors and windows closed.
- Limit energy usage by using TIMER ON and TIMER OFF functions.
- Do not block air inlets or outlets.
- Regularly inspect and clean air filters.

MANUAL OPERATIONS AND MAINTENANCE

Operation mode selection

While two or more indoor units are simultaneously operating, make sure the modes do not conflict with each other. The heat mode claims precedence over all other modes. If the unit initially started to operate in HEAT mode, the other units can operate in HEAT mode only. For example: If the unit initially started operates under COOL (or FAN) mode, the other units can operate under any mode except HEAT. If one of the unit selects HEAT mode, the other operating units will stop operation and display ”--” (for units with display window only) or the auto and operation indication light will flash rapidly, the defrost indication light will turn on, and the timer indication light will remain on (for units without a display window). Alternatively, the defrost and alarm indication light (if applicable) will light up, or the operation indication light will flash rapidly, and the timer indication light will turn off (for the floor and standing type).

Maintenance

If you plan to leave the unit idle for a long time, perform the following tasks:

1. Clean the indoor unit and air filter.
2. Select FAN ONLY mode and let the indoor fan run for a time to dry the inside of the unit.
3. Disconnect the power supply and remove the battery from the remote control.
4. Check components of the outdoor unit periodically. Contact a local dealer or a customer service center if the unit requires servicing.

NOTE: Before you clean the air conditioner, be sure to switch off the unit and disconnect the power supply plug.

Optimal operation

To achieve optimal performance, please note the following:

- Adjust the direction of the air flow so that it is not blowing directly on people.
- Adjust the temperature to achieve the highest possible level of comfort. Do not adjust the unit to excessive temperature levels.
- Close doors and windows in COOL mode or HEAT mode.
- Use the TIMER ON button on the remote controller to select a time you want to start your air conditioner.
- Do not place any object near the air inlet or air outlet, as the efficiency of the air conditioner may be reduced and the air conditioner may stop running.
- Clean the air filter periodically, otherwise cooling or heating performance may be reduced.
- Do not operate unit with horizontal louver in closed position.

Suggestion:

For temperatures below 32F (0C), it is recommended to keep power applied to outdoor unit for the crankcase heater to assist in cold starting operation.

When the air conditioner is to be used again:

- Use a dry cloth to wipe off the dust accumulated on the rear air intake grille in order to avoid the dust being dispersed from the indoor unit.
- Check that the wiring is not broken off or disconnected.
- Check that the air filter is installed.
- Check if the air outlet or inlet is blocked after the air conditioner has not been used for a long time.

Manufacturer reserves the right to change, at any time, specifications and designs without notice and without obligations.

TROUBLESHOOTING

CAUTION

If any of the following conditions occurs, turn off your unit immediately!
- The power cord is damaged or abnormally warm
- You smell a burning odor
- The unit emits loud or abnormal sounds
- A power fuse blows or the circuit breaker frequently trips
- Water or other objects fall into or out of the unit

DO NOT ATTEMPT TO FIX THESE YOURSELF! CONTACT AN AUTHORIZED SERVICE PROVIDER IMMEDIATELY.

⚠ WARNING

ELECTRICAL SHOCK HAZARD

When attempting to access internal electrical components, it is necessary to shut off the power to the outdoor unit and wait 10 minutes for the capacitors to fully discharge. Failure to do so could result in bodily injury or death

COMMON ISSUES

Table 19 — Common Issues

ISSUE	POSSIBLE CAUSE
Unit does not turn on when pressing **ON/OFF**.	The Unit has a 3-minute protection feature that prevents the unit from overloading. The unit cannot be restarted within three minutes of being turned off..
	Cooling and Heating Models: If the Operation light and PRE-DEF (Pre-heating/ Defrost) indicators are lit up, the outdoor temperature is too cold and the unit's anti-cold wind is activated in order to defrost the unit.
	In Cooling-only Models: If the "Fan Only" indicator is lit up, the outdoor temperature is too cold and the unit's anti-freeze protection is activated in order to defrost the unit.
The unit changes from **COOL/HEAT** mode to **FAN** mode	The unit may change its setting to prevent frost from forming on the unit. Once the temperature increases, the unit starts operating in the previously selected mode again.
	The set temperature has been reached, at which point the unit turns o the compressor. The unit continues operating when the temperature fluctuates again.
The indoor unit emits white mist	In humid regions, a large temperature difference between the room's air and the conditioned air can cause white mist.
Both the indoor and outdoor units emit white mist	When the unit restarts in **HEAT** mode after defrosting, white mist may be emitted due to moisture generated from the defrosting process.
The indoor unit makes noises	A rushing air sound may occur when the louver resets its position. A squeaking sound may occur after running the unit in **HEAT** mode due to expansion and contraction of the unit's plastic parts.
Both the indoor unit and outdoor unit make noises	Low hissing sound during operation: This is normal and is caused by refrigerant gas flowing through both indoor and outdoor units.
	Low hissing sound when the system starts, has just stopped running, or is defrosting: This noise is normal and is caused by the refrigerant gas stopping or changing direction.
The outdoor unit makes noises	The unit makes different sounds based on its current operating mode.
Dust is emitted from either the indoor or outdoor unit	The unit may accumulate dust during extended periods of non-use, which emits when the unit is turned on. This can be mitigated by covering the unit during long periods of inactivity.
The unit emits a bad odor	The unit may absorb odors from the environment (such as furniture, cooking, cigarettes, etc.) which emit during operations.
	The unit's filters have become moldy and should be cleaned.
The fan of the outdoor unit does not operate	During operation, the fan speed is controlled to optimize product operation.

NOTE: If problem persists, contact a local dealer or your nearest customer service center. Provide them with a detailed description of the unit malfunction as well as your model number.

When troubles occur, please check the following points before contacting a repair company.

PROBLEM	POSSIBLE CAUSES	SOLUTION
POOR COOLING PERFORMANCE	Temperature setting may be higher than ambient room temperature	Lower the temperature setting
	The heat exchanger on the indoor or outdoor unit is dirty	Clean the affected heat exchanger
	The air filter is dirty	Remove the filter and clean it according to instructions
	The air inlet or outlet of either unit is blocked	Turn the unit off, remove the obstruction and turn it back on
	Doors and windows are open	Make sure that all doors and windows are closed while operating the unit
	Excessive heat is generated by sunlight	Close windows and curtains during period of high heat or bright sunshine
	Low refrigerant due to leak or long-term use	Check for leaks, re-seal if necessary and top off refrigerant
THE UNIT IS NOT WORKING	Power failure	Wait for the power to be restored
	The power is turned off	Turn on the power
	The fuse is burned out	Replace the fuse
	Remote control batteries are dead	Replace batteries
	The Unit's 3-minute protection has been activated	Wait three minutes after restarting the unit
THE UNIT STARTS AND STOPS FREQUENTLY	System circuit is blocked	Determine which circuit is blocked and replace the malfunctioning piece of equipment
	There's too much or too little refrigerant in the system	Check for leaks and recharge the system with refrigerant
	Incompressible gas or moisture has entered the system	Evacuate and recharge the system with refrigerant
	There is air, incompressible gas or foreign material in the refrigeration system	Evacuate and recharge the system with refrigerant
	The compressor is broken	Replace the compressor
	The voltage is too high or too low	Install a manostat to regulate the voltage
POOR HEATING PERFORMANCE	The outdoor temperature is lower than 7°C (44.5°F)	Check for leaks and recharge the system with refrigerant
	Cold air is entering through doors and windows	Make sure that all doors and windows are closed during use
	Low refrigerant due to leak or long-term use	Check for leaks, re-seal if necessary and top off refrigerant

Manufacturer reserves the right to change, at any time, specifications and designs without notice and without obligations.

ERROR CODES

For ease of service, the systems are equipped with diagnostic code display LEDs on both the indoor and outdoor units. The outdoor diagnostic display has one red LED on the outdoor unit board and is limited to very few errors. The indoor diagnostic display is a combination of flashing LEDs on the display panel or the front of the unit.

There may be a few error codes displayed in the indoor unit that might relate to the outdoor unit's problems. If possible, always check the diagnostic codes displayed on the indoor unit first.

Table 20 — Error Codes

DISPLAY	MALFUNCTION AND PROTECTION INDICATION
EC07	ODU fan speed out of control
EC0d	ODU malfunction
EC51	ODU EEPROM parameter error
EC52	ODU coil temp sensor error
EC53	ODU ambient temp sensor error
EC54	COMP. discharge temp sensor error
EC56	IDU coil outlet temp sensor error
ECC1	Other IDU refrigerant sensor detects leakage (multi-zone)
EH00	IDU EEPROM malfunction
EH03	IDU fan speed out of control
EH0A	IDU EEPROM parameter error
EH0b	IDU main control and display boards communication error
EH0E	Water-level alarm malfunction
EH3A	External fan DC bus voltage is too low protection
EH3b	External fan DC bus voltage is too high fault
EH60	IDU room temp. sensor (T1) error
EH61	IDU coil temp. sensor (T2) error
EH62/ EH66	Evap coil inlet temp sensor (T2B) open circuit or short circuit
EH65	Evap coil inlet temp. sensor (T2A) open ciruit or short circuit
EHbA	Communication error between indoor unit and external fan module
EHb3	Communication error between wire and master control
EHC1	Refrigerant sensor detects leakage
EHC2	Refrigerant sensor is out of range and leakage is detected
EHC3	Refrigerant sensor is out of range
EL01	IDU & ODU communication error
EL0C	System lacks refrigerant
EL16	Communication malfunction between adapter board and outdoor main board
FHCC	Refrigerant sensor error
FL09	Mismatch between the new and old platforms
PC00	ODU IPM module protection
PC01	ODU voltage protection
PC02	Compressor top (or IPM) temp. protection
PC03	Pressure protection (low or high pressure)
PC04	Inverter compressor drive error
PC0L	Low ambient temp. protection
----	IDUs mode conflict
NOTE: The digital tube will show DF in defrost mode and FC in forced cooling mode. DF and FC are not error codes.	

DUCTLESS START-UP CHECKLIST - Multi Zone

Installation Data

Site Address:_____

City:_____ **State:**_____ **Zip Code:**_____

Installing Contractor:_____ **Contractor Contact #:** ( ) _____-_____

Job Name:_____ **Start-up Date:**_____

Distributor:_____

System Details

UNITS	MODEL NO.	SERIAL NO.	CONTROLLER
OUTDOOR UNIT			
INDOOR UNIT A			
INDOOR UNIT B			
INDOOR UNIT C			
INDOOR UNIT D			
INDOOR UNIT E			
INDOOR UNIT F			

Are the outdoor unit and indoor unit compatible? YES:_____ NO:_____

Wiring Electrical

Wire Size and Type Used? AWG:_____ TYPE:_____

Are there any breaks, splices, wire nuts or butt connectors between the outdoor unit and the indoor unit? YES:_____ NO:_____

Was the wiring from the outdoor unit port to the correct indoor unit verified? YES:_____ NO:_____

REMARKS:_____

_____

Voltage Check

Wiring: Multi-Zone

Outdoor Unit Disconnect	1(L1):GND		Outdoor Unit Terminal Block	1(L1):GND		NOTES:_____		
	2(L2):GND			2(L2):GND				
	1(L1):2(L2)			1(L1):2(L2)				
Port A	1(L1):GND		Port B	1(L1):GND		Port C	1(L1):GND	
	2(L2):GND			2(L2):GND			2(L2):GND	
	1(L1):2(L2)			1(L1):2(L2)			1(L1):L2(2)	
	2(L2):3(S)			2(L2):3(S)			2(L2):3(S)	
Port D	1(L1):GND		Port E	1(L1):GND		NOTES:_____		
	2(L2):GND			2(L2):GND				
	1(L1):2(L2)			1(L1):2(L2)				
	2(L2):3(S)			2(L2):3(S)				
Indoor Unit Voltage Check @ Indoor Unit A	1(L1):GND		Indoor Unit Voltage Check @ Indoor Unit B	1(L1):GND		Indoor Unit Voltage Check @ Indoor Unit C	1(L1):GND	
	2(L2):GND			2(L2):GND			2(L2):GND	
	1(L1):2(L2)			1(L1):2(L2)			1(L1):2(L2)	
	2(L2):3(S)			2(L2):3(S)			2(L2):3(S)	
Indoor Unit Voltage Check @ Indoor Unit D	1(L1):GND		Indoor Unit Voltage Check @ Indoor Unit E	1(L1):GND		NOTES:_____		
	2(L2):GND			2(L2):GND				
	1(L1):2(L2)			1(L1):2(L2)				
	2(L2):3(S)			2(L2):3(S)				

NOTE: Power needs to be verified from each leg to the ground as well as leg to leg.

Ductless Start-Up Checklist (CONT)

Piping

Leak Check:

System held 500 psig (max. 550psi) for a minimum of 30 minutes using dry nitrogen. YES:_____ NO:_____

Evacuation Method:

- Was the Triple Evacuation Method used as outlined in the installation manual? YES:_____ NO:_____
- Was the Deep Vacuum Method used as outlined in the installation manual? YES:_____ NO:_____
- Did the System Hold 500 microns for 1 hour? YES:_____ NO:_____
- Does the line set match the diameter of the evaporator connections? YES:_____ NO:_____
- For Conventional Fan Coils, does the line set match the outdoor unit size? YES:_____ NO:_____

Multi-Zone Piping:

Are the service ports open? YES:_____ NO:_____

Check that the piping is not crossed. Turn on one indoor unit at a time and observe if the EEV is opening on the correct port.

NOTE: _____

_____

PORT	LIQUID SIZE		SUCTION SIZE		LENGTH	CHARGE
A						
B						
C						
D						
E						
F						
					TOTAL CHARGE:	

NOTES:_____

_____

_____

_____

_____

Performance Check

Adjust the set-point of one indoor unit and allow 10 minutes of continuous operation before recording any values. Once all the values have been recorded, repeat the process for the remaining indoor unit(s) one at a time. Once complete, all the connected heads should operate.

(Operational data recorded on applicable heads with the wireless remote controller's Point Check function))

UNIT	SET-POINT	MODE	T1	T2	T3	T4	Tb	Tp	Th	LA/Lr
A										
B										
C										
D										
E										
F										

NOTE:

- T1 - Ambient Space Temperature Sensor
- T2 - IDU Coil Temperature Sensor
- T3 - Outdoor Coil Temperature Sensor
- T4 - Outdoor Ambient Temperature
- Tb - Suction Line Temperature @PMV
- Tp - Discharge Temperature Sensor
- Th - IPM Board Temperature
- LA/Lr - PMV Temperature

Error Codes

Were there any error codes present at start-up? YES:_____ NO:_____

Indoor Unit Error Code:		**Notes:**
Outdoor Unit Error Code:		
Wall Controller:		
24V Interface:		

Comments:

_____

_____

© 2024 Carrier. All rights reserved.

Manufacturer reserves the right to change, at any time, specifications and designs without notice and without obligations.