38AU
Air-Cooled Condensing Units
50 Hz
with Puron® (R-410A) Refrigerant
Sizes 07 - 14

Carrier®
Turn to the Experts.℠

Installation, Start-Up and Service Instructions

CONTENTS

SAFETY CONSIDERATIONS 1
INSTALLATION GUIDELINES. 2
INSTALLATION 9-19
Step 1 – Plan for Unit Location 9
Step 2 – Complete Pre-Installation Checks. 9
Step 3 – Prepare Unit Mounting Support 9
Step 4 – Rig and Mount the Unit 9
Step 5 – Complete Refrigerant Piping Connections . . 10
Step 6 – Install Accessories. 14
Step 7 – Complete Electrical Connections 14
PRE-START-UP 19
System Check 19
Turn On Crankcase Heater 19
Preliminary Charge. 19
START-UP. . . . . 19 -25
38AU Units 19
OPERATING SEQUENCE. 26
Indoor (Supply) Fan 26
Cooling, Unit Without Economizer 26
Cooling, Unit With Economizer 26
Heating. 26
ROUTINE SYSTEM MAINTENANCE. 26
Quarterly Inspection (and 30 days after initial start) . . 26
Seasonal Maintenance 26
SERVICE. . . . . .27 - 33
Refrigeration System 27
Compressor Oil. 27
Servicing Systems on Roofs with Synthetic Materials. 27
Liquid Line Filter Drier 27
Filed Refrigerant Access Ports 27
Factory High-flow Access Ports 27
Comfort Alert Diagnostic Module. 28
Crankcase Heater 30
Compressor Protection. 30
Low-Pressure Switches 30
High-Pressure Switches. 30
Outdoor Fans. 30
Lubrication 30
NOVATION™ Coil Cleaning and Maintenance 33
Repairing NOVATION Condenser Tube Leaks 33
Replacing NOVATION Condenser Coil 33
Service Parts 33
Fastener Torque Values 33
TROUBLESHOOTING . . . . . 34 -35
APPENDIX A
Air Conditioner and Heat Pump with Puron® – Quick Reference Guide 36
APPENDIX B
Wiring Diagram List. 36
APPENDIX C
Motormaster Sensor Locations. 37
START-UP CHECKLIST CL-1, CL-2

SAFETY CONSIDERATIONS

Improper installation, adjustment, alteration, service, maintenance, or use can cause explosion, fire, electrical shock or other conditions which may cause personal injury or property damage. Consult a qualified installer, service agency, or your distributor or branch for information or assistance. The qualified installer or agency must use factory-authorized kits or accessories when modifying this product. Refer to the individual instructions package

Follow all safety codes. Wear safety glasses and work gloves. Use quenching cloths for brazing operations and have a fire extinguisher available. Read these instructions thoroughly and follow all warnings or cautions attached to the unit. Consult local building codes for special requirements. In absence of local codes, it is recommended that the (USA standard ANSI/ NFPA70, National Electrical Code (NEC), be followed.

It is important to recognize safety information. This is the safety-alert symbol ⚠. When you see this symbol on the unit and in instructions or manuals, be alert to the potential for personal injury.

Understand the signal words DANGER, WARNING, CAUTION, and NOTE. These words are used with the safety-alert symbol. DANGER identifies the most serious hazards which **will** result in severe personal injury or death. WARNING signifies hazards which **could** result in personal injury or death. CAUTION is used to identify unsafe practices, which **may** result in minor personal injury or product and property damage. NOTE is used to highlight suggestions which **will** result in enhanced installation, reliability, or operation.

⚠ WARNING

ELECTRICAL SHOCK HAZARD

Failure to follow this warning could cause personal injury or death.

Before performing service or maintenance operations on unit, always turn off main power switch to unit and install lockout tag. Unit may have more than one power switch.

⚠ WARNING

UNIT OPERATION AND SAFETY HAZARD

Failure to follow this warning could cause personal injury, death and/or equipment damage.

Puron® (R-410A) refrigerant systems operate at higher pressures than standard R-22 systems. Do not use R-22 service equipment or components on Puron refrigerant equipment.

⚠ WARNING

PERSONAL INJURY AND ENVIRONMENTAL HAZARD

Failure to follow this warning could cause personal injury or death.

Relieve pressure and recover all refrigerant before system repair or final unit disposal.

Wear safety glasses and gloves when handling refrigerants. Keep torches and other ignition sources away from refrigerants and oils.

⚠ CAUTION

CUT HAZARD

Failure to follow this caution may result in personal injury.

Sheet metal parts may have sharp edges or burrs. Use care and wear appropriate protective clothing, safety glasses and gloves when handling parts and servicing 38AU units.

INSTALLATION GUIDELINE

Replacement /Retrofit – R22 to Puron®

Replacement/retrofit installations require change-out of outdoor unit, metering device, and filter driers. Change-out of indoor coil (evaporator) and interconnecting tubing is recommended.

Existing evaporator coil – If the existing evaporator coil may be re-used, check with the coil manufacturer to verify the coil construction is suitable for operation with the higher pressures of Puron® (R-410A). Also determine if the existing TXV valve is compatible with R-410A, replace if necessary. The minimum factory test pressure rating must be 1725 kPa (250 psig). Existing coil will need to be purged with Nitrogen to remove as much mineral oil as possible to eliminate cross contamination of oils.

Acid test – If the existing system is being replaced because of a compressor electrical failure, assume acid is in system. If system is being replaced for any other reason, use an approved acid test kit to determine acid level. If even low levels of acid are detected, install a 100 percent activated alumina suction-line filter drier in addition to the replacement liquid-line filter drier. Remove the suction line filter drier as soon as possible, with a maximum of 72 hr of operation. Recommendation: Install a ball valve in the liquid line at the filter drier location when installing a suction filter in the suction line (to facilitate evacuation of the system's low side when suction filter-drier is removed).

Installation –

1. Remove the existing evaporator coil or fan coil and install the replacement coil when appropriate.
2. Drain oil from low points and traps in suction line tubing (and hot gas bypass tubing if appropriate) and evaporator if they were not replaced. Removing oil from evaporator coil may require purging of the tubing with dry nitrogen.
3. Unless indoor unit is equipped with a Puron® approved metering device, change the metering device to a thermal expansion valve (TXV) designed for Puron® (R-410A).
4. Remove the existing outdoor unit. Install the new outdoor unit according to these installation instructions.
5. Install a new field-supplied liquid-line filter drier at the indoor coil just upstream of the TXV or fix orifice metering device.
6. If a suction line fil.ter-drier is also to be installed, install the suction line filter-drier immediately upstream of the suction line service valve at the outdoor unit. Note the recommendation above regarding use of ball valve in the liquid line.

⚠ CAUTION

UNIT DAMAGE HAZARD

Failure to follow this caution may result in equipment damage or improper operation.

Never install suction-line filter drier in the liquid-line of a Puron® system.

7. If required, install a 100% activated alumina suction line filter drier at the outdoor unit.
8. Evacuate and charge the system according to the instructions in this installation manual.
9. Operate the system for 10 hr. Monitor the pressure drop across the suction line filter drier. If pressure drop exceeds 21kPa (3 psig), replace suction-line and liquid-line filter driers. Be sure to purge system with dry nitrogen and evacuate when replacing filter driers. Continue to monitor the pressure drop across suction-line filter drier. Repeat filter changes is necessary. Never leave suction-line filter drier in system longer than 72 hr.

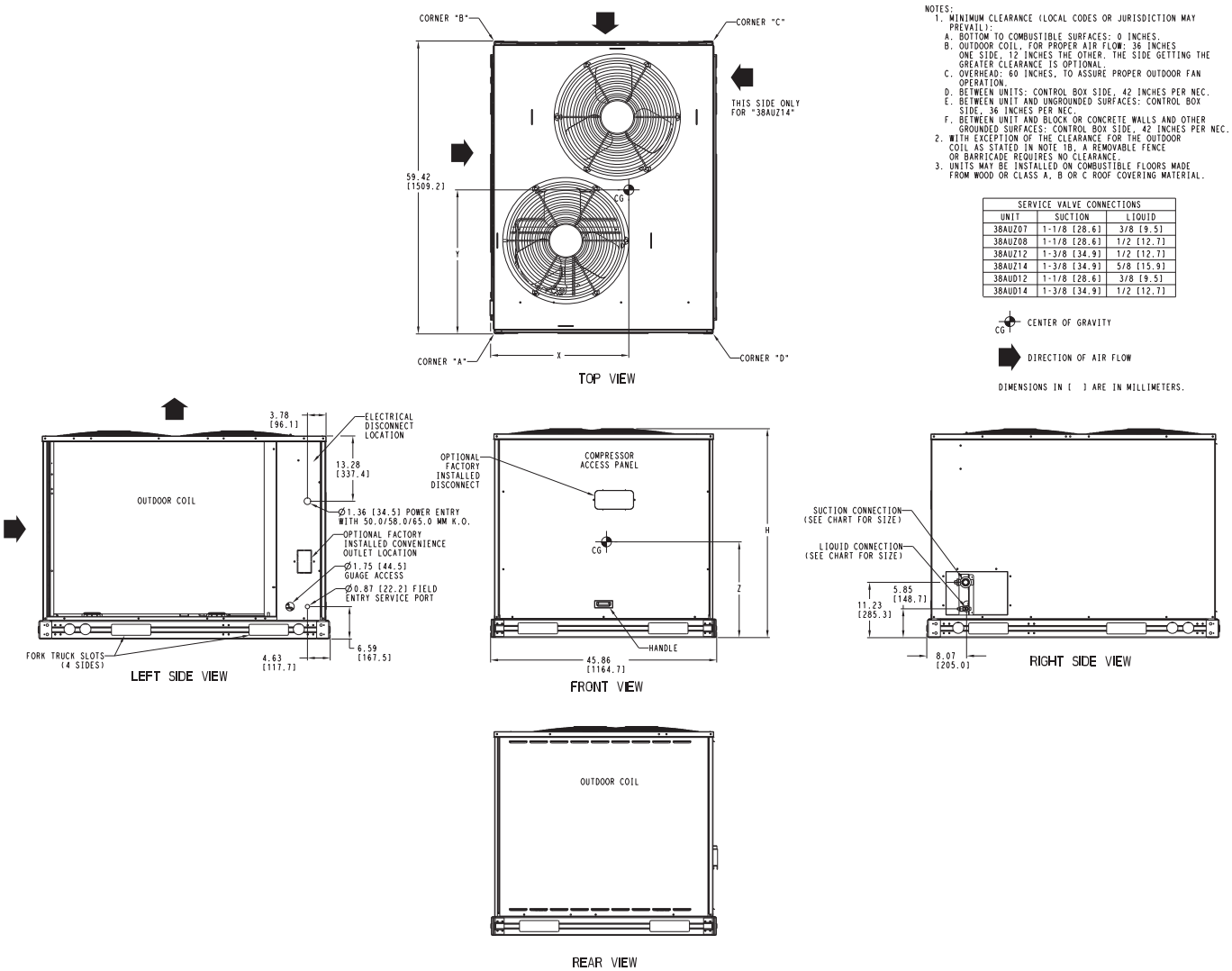

UNIT	Standard Weight		Corner A		Corner B		Corner C		Corner D		Center of Gravity			Unit Height
	lbs.	kg.	lbs.	kg.	lbs.	kg.	lbs.	kg.	lbs.	kg.	X	Y	Z	H
38AUZ*07	328	149	128	58	68	31	62	28	70	32	21.00 [533.4]	19.00 [482.6]	13.00 [330.2]	42.36 [1076.0]
38AUZ*08	353	160	138	63	72	33	65	29	78	35	19.00 [482.6]	23.00 [584.2]	13.00 [330.2]	42.36 [1076.0]
38AUD*12	499	226	193	88	111	50	72	38	123	56	20.000 [508.0]	23.00 [584.2]	15.00 [381.0]	50.36 [1279.2]
38AUD*14	505	229	190	86	88	40	76	34	151	68	20.000 [508.0]	24.00 [609.6]	15.00 [381.0]	50.36 [1279.2]

Fig. 1 — 38AU*07-14 Unit Dimensions

Table 1A — Physical Data — 38AUZ*07-08 Units — 50 Hz English

UNIT SIZE 38AU	Z*07	Z*08
NOMINAL CAPACITY (tons)	6	7.5
OPERATING WEIGHTS (lb)		
Aluminum-Fin Coils	328	353
REFRIGERANT TYPE‡	R-410A	
Operating Charge, Typical (lb)†	9.0	12.3
Shipping Charge (lb)	4.4	4.9
COMPRESSOR		
Qty...Type	1...Scroll	
OUTDOOR FANS		
Qty...Rpm	2...1100	
Motor Hp	$^1/_4$	
Diameter	22	
Nominal Airflow (Cfm Total)	6000	
Watts (Total)	610	
OUTDOOR COIL (Qty)	1...NOVATION	
Face Area (sq ft total)	17.5	20.5
Rows/Fins per inch (FPI)	1/17	1/17
CONTROLS		
Pressurestat Settings (psig)		
High Cutout	630 ± 10	
Cut-in	505 ± 20	
Low Cutout	54 ± 3	
Cut-in	117 ± 5	
PIPING CONNECTIONS (in. ODS)		
Qty...Suction	1...$1^1/_8$	1...$1^1/_8$
Qty...Liquid	1...$^3/_8$	1...$^1/_2$

LEGEND
ODS — Outside Diameter Sweat (socket)

‡ Unit is factory-supplied with partial charge only.
† Typical operating charge with 25 ft of interconnecting piping.

Table 1B — Physical Data — 38AUZ*07-08 Units — 50 Hz SI

UNIT SIZE 38AU	Z*07	Z*08
NOMINAL CAPACITY (kW)	21.1	26.4
OPERATING WEIGHT (kg)		
Aluminum-Fin Coils	149	160
REFRIGERANT TYPE‡	R-410A	
Operating Charge, Typical (kg)†	4.1	5.6
Shipping Charge (kg)	2.0	2.2
COMPRESSOR		
Qty...Type	1...Scroll	
OUTDOOR FANS		
Qty...r/s	2...18	
Motor Hp NEMA	1/4	
Diameter (mm)	560	
Nominal Airflow (L/s)	2832	
Watts (Total)	610	
OUTDOOR COIL (Qty)	1...NOVATION	
Face Area (sq m total)	1.6	1.9
Rows/Fins per Meter (Fins/m)	1...670	1...670
CONTROLS		
Pressurestat Settings (kPa)		
High Cutout	4347 ± 70	
Cut-in	3482 ±138	
Low Cutout	372 ± 21	
Cut-in	807 ± 34	
PIPING CONNECTIONS (in. ODS)		
Qty...Suction	1...1 1/8	1...1 1/8
Qty...Liquid	1...3/8	1...1/2

LEGEND
NEMA — National Electrical Manufacturers Association
ODS — Outside Diameter Sweat (socket)

‡ Unit is factory-supplied with partial charge only.
† Typical operating charge with 7.62 m of interconnecting piping.

Table 2A — Physical Data — 38AUD*12-14 Units — 50 Hz English

UNIT SIZE 38AU	D*12	D*14
NOMINAL CAPACITY (tons)	10	12.5
OPERATING WEIGHTS (lb)		
Aluminum-Fin Coils	418	431
REFRIGERANT TYPE‡	R-410A	
Operating Charge A/B, Typical (lb)†	7.5/7.5	11.2/11.2
Shipping Charge A/B (lb)	3.0/3.1	3.7/3.9
COMPRESSOR		
Qty...Type	2...Scroll	
OUTDOOR FANS		
Qty... RPM	2...1100	
Motor Hp	$^1/_4$	
Diameter (in)	22	
Nominal Airflow (Cfm Total)	6,000	
Watts (Total)	610	
OUTDOOR COIL (Qty)	1...NOVATION	
Face Area (sq ft total)	25.0	31.8
Rows/Fins per inch (FPI)	1/17	1/17
CONTROLS		
Pressurestat Settings (psig)		
High Cutout	630 ± 10	
Cut-in	505 ± 20	
Low Cutout	54 ± 3	
Cut-in	117 ± 5	
PIPING CONNECTIONS (in. ODS)		
Qty...Suction A/B	1...$1^1/_8$ /1...$1^1/_8$	1...$1^3/_8$ /1...$1^3/_8$
Qty...Liquid A/B	1...$^3/_8$ /1...$^3/_8$	1...$^1/_2$ /1...$^1/_2$

LEGEND
ODS — Outside Diameter Sweat (socket)

‡ Unit is factory-supplied with partial charge only.
† Typical operating charge with 25 ft of interconnecting piping.

Table 2B — Physical Data — 38AUD*12-14 Units — 50 Hz SI

UNIT SIZE 38AU	D*12	D*14
NOMINAL CAPACITY (kW)	35.1	44
OPERATING WEIGHT (kg)		
Aluminum-Fin Coils	190	196
REFRIGERANT TYPE‡	R-410A	
Operating Charge A/B, Typical (kg)†	3.4/3.4	5.1/5.1
Shipping Charge A/B (kg)	1.3/1.4	1.7/1.8
COMPRESSOR		
Qty...Model	2...Scroll	
OUTDOOR FANS		
Qty... r/s	2...18	
Motor Hp NEMA	$^1/_4$	
Diameter (mm)	560	
Nominal Airflow (Cfm Total)	6,000	
Watts (Total)	610	
OUTDOOR COIL (Qty)	1...NOVATION	
Face Area (sq m total)	2.3	3.0
Rows/Fins per Meter (Fins/m)	1...670	1...670
CONTROLS		
Pressurestat Settings (kPa)		
High Cutout	4347 ± 70	
Cut-in	3482 ±138	
Low Cutout	372 ± 21	
Cut-in	807 ± 34	
PIPING CONNECTIONS (in. ODS)		
Qty...Suction A/B	1...$1^1/_8$ /1...$1^1/_8$	1...$1^3/_8$ /1...$1^3/_8$
Qty...Liquid A/B	1...$^3/_8$ /1...$^3/_8$	1...$^1/_2$ /1...$^1/_2$

LEGEND
NEMA — National Electrical Manufacturers Association
ODS — Outside Diameter Sweat (socket)

‡ Unit is factory-supplied with partial charge only.
† Typical operating charge with 7.62 m of interconnecting piping.

1	2	3	4	5	6	7	8	9	10	11	12	13	14	15	16	17	18
3	8	A	U	Z	A	0	7	A	0	G	9	–	0	A	0	A	0

Model Type
38AU= Carrier Condensing Unit
Puron® R–410A Refrigerant

Type of Coil
Z = Single Circuit, A/C Scroll Compressor
D = Dual Circuit, A/C Scroll Compressor

Refrigerant Options
A = None
B = Low Ambient

Nominal Tonnage
07 = 6 Tons
08 = 7.5 Tons
12 = 10 Tons
14 = 12.5 Tons

Factory Assigned
A = Default

Factory Assigned
0 = Default

Coil Options (Condenser)
G = Al/Al Standard
K = E-Coated Al/Al
T = Al/Al with Louvered Hail Guard
W= E-Coated Al/Al with Louvered Hail Guard

Voltage
9 = 400/3/50

Design Rev
– = Catalog Model Number
A = Initial Rev (Discrete Model Number)

Base Unit Controls
0 = Electro-Mechanical Controls

Factory Assigned
A = Default

Service Options
0 = None

Electrical Options
A = None
C = Non-Fused Disconnect

Packaging
0 = Standard
1 = LTL

Fig. 2 — Model Number Nomenclature

POSITION NUMBER	1	2	3	4	5	6	7	8	9	10
TYPICAL	4	6	0	9	G	1	2	3	4	5

POSITION	DESIGNATES
1–2	Week of manufacture (fiscal calendar)
3–4	Year of manufacture (”09” = 2009)
5	Manufacturing location (G = ETP, Texas, USA)
6–10	Sequential number

Fig. 3 — Serial Number Nomenclature

Matching 38AU Model To Evaporator Coil –

The Model 38AUZ is a single-circuit unit design, requiring one set of refrigeration piping. This model can be connected to an evaporator coil with one circuit or with two circuits (by manifolding the evaporator connections into a single piping system).

The Model 38AUD is a dual-circuit unit design that requires two sets of refrigeration piping between the outdoor unit and the evaporator coil (or coils). This model can only be connected to an evaporator coil that has two refrigeration circuits (or to two separate evaporator coils). The Model 38AUD CANNOT be connected to a single-circuit evaporator coil. The Model 38AUD CANNOT be field-converted to a single-circuit design.

Before unpacking this new 38AU model, compare the evaporator coil design to the 38AU model.

Table 3 — Evaporator Coil Connections

Evaporator Coil has	Connect to Model	Notes
Single Circuit	38AUZ ONLY	
Two Circuits	38AUZ Or 38AUD	Manifold evaporator circuits into single piping system Use two separate piping systems

INSTALLATION

Jobsite Survey

Complete the following checks before installation.

1. Consult local building codes or the U.S. A. National Electrical Code (Ref: ANSI/NFPA 70 [American National Standards Institute/National Fire Protection Association], latest version) for special installation requirements.
2. Determine unit location (from project plans) or select unit location.
3. Check for possible overhead obstructions which may interfere with unit lifting or rigging.

Step 1 — Plan for Unit Location

Select a location for the unit and its support system (pad, rails or other) that provides for the minimum clearances required for safety. This includes minimum working space, clearances between live electrical components and nearest barriers (grounded or ungrounded), clearances for unit performance and service access below, around and above unit as specified in unit drawings. See Fig. 4.

NOTE: Local codes may require different clearances than specified in Fig. 4. It is the responsibility of installers to be knowledgeable in local codes and to modify the recommended clearances to satisfy local codes.

NOTE: Consider also the effect of adjacent units on airflow performance and control box safety clearance.

Do not install the outdoor unit in an area where fresh air supply to the outdoor coil may be restricted or when recirculation from the condenser fan discharge is possible. Do not locate the unit in a well or next to high walls.

Evaluate the path and required line length for interconnecting refrigeration piping, including suction riser requirements (outdoor unit above indoor unit), liquid line lift (outdoor unit below indoor unit) and hot gas bypass line. Relocate sections to minimize the length of interconnecting tubing.

DO NOT BURY REFRIGERATION LINES.

Although unit is weatherproof, avoid locations that permit water from higher level runoff and overhangs to fall onto the unit.

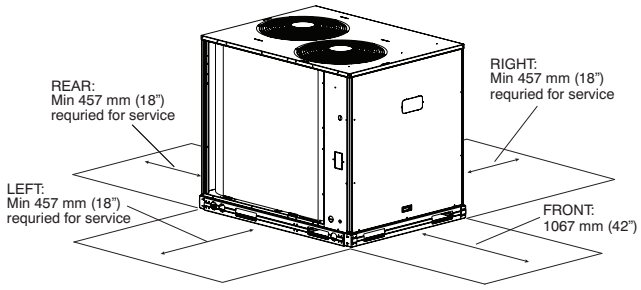

Note: Observe requirements for 914 mm (39") operating clearance on either Left or Rear coil opening.

Fig. 4 — Service Clearance Dimensional Drawing

Step 2 — Complete Pre-Installation Checks

CHECK UNIT ELECTRICAL CHARACTERISTIC — Confirm before installation of unit that voltage, amperage and circuit protection requirements listed on unit data plate agree with power supply provided.

— UNCRATE UNIT — Remove unit packaging except for the top skid assembly, which should be left in place until after the unit is rigged into its final location.

INSPECT SHIPMENT — File a claim with shipping company if the shipment is damaged or incomplete.

CONSIDER SYSTEM REQUIREMENTS

- Consult local building codes and National Electrical Code (NEC, U.S.A.) for special installation requirements.
- Allow sufficient space for airflow clearance, wiring, refrigerant piping, and servicing unit. See Fig.1 for unit dimensions and weight distribution data.
- Locate the unit so that the outdoor coil (condenser) airflow is unrestricted on all sides and above.
- The unit may be mounted on a level pad directly on the base channels or mounted on raised pads at support points. See Tables 1A through 2B for unit operating weights. See Fig. 1 for weight distribution based on recommended support points.

NOTE: If vibration isolators are required for a particular installation, use the data in Fig. 1 to make the proper selection.

Step 3 — Prepare Unit Mounting Support

Slab Mount —

Provide a level concrete slab that extends a minimum of 150 mm (6 in.) beyond unit cabinet. Install a gravel apron in front of condenser coil air inlet to prevent grass and foliage from obstructing airflow.

Step 4 — Rig and Mount the Unit

⚠ CAUTION

UNIT DAMAGE HAZARD

Failure to follow this caution may result in equipment damage.

All panels must be in place when rigging. Unit is not designed for handling by fork truck.

RIGGING — These units are designed for overhead rigging. Refer to the rigging label for preferred rigging method. Spreader bars are not required if top crating is left on the unit. All panels must be in place when rigging. As further protection for coil

faces, plywood sheets may be placed against the sides of the unit, behind cables. Run cables to a central suspension point so that the angle from the horizontal is not less than 45 degrees. Raise and set the unit down carefully.

If it is necessary to roll the unit into position, mount the unit on longitudinal rails, using a minimum of 3 rollers. Apply force to the rails, not the unit. If the unit is to be skidded into position, place it on a large pad and drag it by the pad. Do not apply any force to the unit.

Raise from above to lift the unit from the rails or pad when unit is in its final position.

After the unit is in position, remove all shipping materials and top crating.

Step 5 — Complete Refrigerant Piping Connections

IMPORTANT: Do not bury refrigerant piping underground.

IMPORTANT: A refrigerant receiver is not provided with the unit. Do not install a receiver.

PROVIDE SAFETY RELIEF — The 38AU unit is provided with a fusible joint in the suction line in accordance with applicable UL standards for pressure relief. If local codes dictate an additional safety relief device, purchase locally and install locally. Installation will require the recovery of the factory shipping charge before the factory tubing can be cut and the supplemental relief device is installed.

Model 38AUD has two separate refrigeration systems. If required, each circuit will require a field-supplied/installed supplemental relief device.

Table 4 — Equivalent Lengths for Common Fittings (ft)

Nominal Tube OD	Elbows				
	90° Std	90° Lrad	90° Street	45° Std	45° Street
3/8	1.3	0.8	2.2	0.6	1
1/2	1.4	0.9	2.3	0.7	1.1
5/8	1.6	1	2.5	0.8	1.3
3/4	1.8	1.2	2.9	0.9	1.5
7/8	2	1.4	3.2	0.9	1.6
1 1/8	2.6	1.7	4.1	1.3	2.1
1 3/8	3.3	2.3	5.6	1.7	3
1 5/8	4	2.6	6.3	2.1	3.4
2 1/8	5	3.3	8.2	2.6	4.5

Nominal Tube OD	Tees			
	Branch Flow	Straight-Thru		
		No Reduct	Reduce 25%	Reduce 50%
3/8	2.6	0.8	1.1	1.3
1/2	2.7	0.9	1.2	1.4
5/8	3	1	1.4	1.6
3/4	3.5	1.2	1.7	1.8
7/8	4	1.4	1.9	2
1 1/8	5	1.7	2.3	2.6
1 3/8	7	2.3	3.1	3.3
1 5/8	8	2.6	3.7	4
2 1/8	10	3.3	4.7	5

CHECK 38AU MODEL WITH EVAPORATOR COIL CONNECTIONS — Confirm before installation of unit that the evaporator coil connections are consistent with this 38AU model. See Table 3 on page 9.

DETERMINE REFRIGERANT LINE SIZES — Select the recommended line sizes for 38AUZ and 38AUD unit from the appropriate tables.

Determine the linear length of interconnecting piping required between the outdoor unit and indoor unit (evaporator). Consider and identify also the arrangement of the tubing path (quantity and type of elbows in both lines), liquid line solenoid size, filter drier and any other refrigeration specialties located in the liquid line. Refer to the indoor unit installation instructions for additional details on refrigeration specialties devices.

Determine equivalent line length adjustments for path and components and add to linear line lengths. See Table 4, Equivalent Lengths for Common Fittings, for usual fitting types. Also identify adjustments for refrigeration specialties. Refer to Part 3 of the Carrier System Design Manual for additional data and information on equivalent lengths.

NOTE: Equivalent line lengths will vary based on tube diameter. Calculate equivalent line length for each pipe by adding equivalent length adjustments to linear lengths for each pipe.

Enter the appropriate table to select the recommended line sizes.

Model:	Line Sizes Table	Quantity of Line Sets
38AUZ	5	1
38AUD	6	2

Liquid Lift – A liquid lift condition exists when the outdoor unit is located below the indoor (evaporator) unit and liquid flows vertically up in a portion of the liquid line. The vertical column of liquid reduces the available state point subcooling at the evaporator coil's thermal expansion valve. This effect reduces the length of liquid lift (feet of elevation) that a liquid line size can accommodate. Longer linear tube lengths will also reduce the amount of liquid lift possible.

Check Tables 5 (38AUZ) and 6 (38AUD) for maximum liquid lift capabilities for line sizes. Reselect the liquid line tube size if necessary. If maximum available tube size cannot provide the required lift distance on this installation, relocate the outdoor unit to reduce the equivalent line length or the lift requirement.

Suction Riser – A suction riser condition exists when the outdoor unit is located above the indoor (evaporator) unit and suction vapor must flow vertically up to return to the compressor. Oil return is a concern when the suction tube size is too large to produce the minimum refrigerant velocity to ensure oil return at minimum load conditions.

Check Table 7 for maximum suction tube size for 38AU units at minimum load conditions. Consider suction speed riser (reduced tube size for vertical segment only) or double suction riser arrangement if the recommended suction tube size does not provide necessary minimum flowrates for this riser.

Table 5 — 38AUZ 07-08 Piping Recommendations (Single-Circuit Unit)

R-410A	Equivalent Length					
	Ft	0-38	38-75	75-113	113-150	150-188
	m	0-12	12-23	23-34	34-46	46-57
Model	Typ Linear ft	0-25	25-50	50-75	75-100	100-125
38AUZ*07	Liquid Line	3/8	3/8 1/2	1/2	1/2 5/8	1/2 5/8
	Max Lift	25	42 50	75	90 100	86 101
	Suction Line	7/8 1-1/8	7/8 1-1/8	1-1/8	1-1/8	1-1/8
	Charge (lbs)	8.4	9.6 11.1	13.1	15.0 18.8	16.9 22.6
38AUZ*08	Liquid Line	1/2	1/2	1/2	1/2	1/2
	Max Lift	25	50	75	100	112
	Suction Line	7/8 1-1/8	1-1/8	1-1/8	1-1/8	1-1/8
	Charge (lbs)	11.8	9.6	12.9	16.8	18.7

Legend:	
Length Equiv	Equivalent tubing length, including effects of refrigeration specialties devices
Liquid Line	Tubing size, inches OD.
Max Lift Cooling Heating	Maximum liquid lift at maximum permitted liquid line pressure drop • Indoor unit ABOVE outdoor unit • Indoor unit BELOW outdoor unit
Suction Line	Tube size, inches OD
Charge	Charge Quantity, lbs. Calculated for both liquid line sizes (where applicable), but only with larger suction line size (where applicable)
NOTE:	For applications with linear length greater than 100 ft (30.5 m), contact your local Carrier representative.

Table 6 — 38AUD 12-14 Piping Recommendations (Two-Circuit Unit)

NOTE: 38AUD requires TWO sets of refrigeration piping

R-410A	Equivalent Length					
	Ft	0-38	38-75	75-113	113-150	150-188
	m	0-12	12-23	23-34	34-46	46-57
Model	Typ Linear ft	0-25	25-50	50-75	75-100	100-125
38AUD*12	Liquid Line	3/8	3/8	3/8 1/2	1/2	1/2
	Max Lift	25	50	28 75	100	99
	Suction Line	7/8	7/8	1 1/8	1 1/8	1 1/8
	Charge ea. (lbs)	7.1	8.1	9.6 11.9	13.8	15.8
38AUD*14	Liquid Line	3/8	3/8	3/8 1/2	1/2	1/2
	Max Lift	25	50	48 75	100	122
	Suction Line	7/8	7/8	1 1/8	1 1/8	1 1/8
	Charge ea. (lbs)	9.7	10.7	12.2 14.5	16.4	18.4

Legend:	
Length Equiv	Equivalent tubing length, including effects of refrigeration specialties devices
Liquid Line	Tubing size, inches OD.
Max Lift Cooling Heating	Maximum liquid lift at maximum permitted liquid line pressure drop • Indoor unit ABOVE outdoor unit • Indoor unit BELOW outdoor unit
Suction Line	Tube size, inches OD
Charge	Charge Quantity, lbs. Calculated for both liquid line sizes (where applicable), but only with larger suction line size (where applicable)
NOTE:	For applications with linear length greater than 100 ft (30.5 m), contact your local Carrier representative.

Table 7 — 38AU Maximum Suction Pipe Size

Model:	Unit Size	Maximum Tube Size
38AUZ	07	1 3/8
	08	1 5/8
38AUD	12	1 3/8
	14	1 5/8

INSULATE SUCTION LINES — Apply closed-cell tubular insulation to all suction lines between evaporator coil connection and 38AU unit's suction service valve.

Hot Gas Bypass – Hot gas bypass, if used, should be introduced before the evaporator. (A bypass route that also bypasses the evaporator circuit may lead to oil trapping in the evaporator circuit during low load conditions and then to oil slugging as evaporator load increases.) Model 38AU units do not include a hot gas stub connection; a tee must be field-supplied and installed in the compressor discharge line. Run a ½-in OD line between outdoor unit and evaporator coil inlet. Install an Auxiliary Side Connector at the evaporator between TXV and distributor (follow instructions for the side connector part). Insulate the hot gas line.

38AUD: Generally only one hot gas bypass system will be applied on a two-circuit unit. Connect the hot gas bypass system to Circuit A (first-on/last-off, connected to the evaporator coil's bottom circuit).

38AUD PIPING CONNECTIONS – The 38AUD's two circuits are designated Circuit A and Circuit B. Circuit A is controlled by the thermostat's Y1 (or TC1) contact and will be the first circuit on and last circuit off. Circuit B is controlled by the thermostat's Y2 (or TC2) contact and this circuit is always the "lag" circuit.

See Fig. 5 for location of the Circuit A and Circuit B service valves and field piping connections. Circuit A is on the right-hand side of the service valve compartment; Circuit B is on the left.

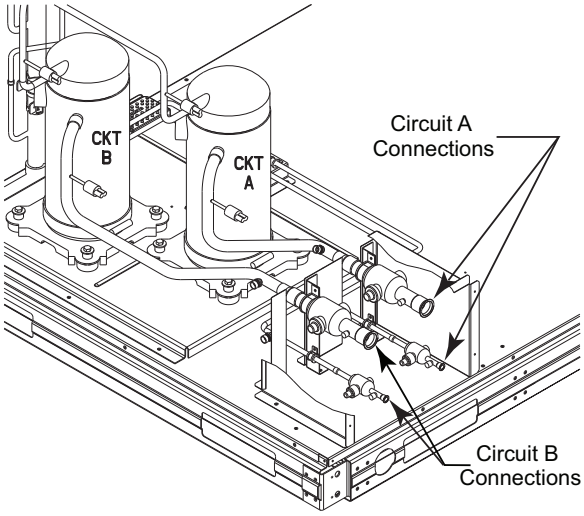

Fig 5 - 38AUD Service Valve Locations

When a single piece evaporator coil with two separate circuits is connected to a 38AUD, the lower coil circuit should be connected to the 38AUD's Circuit A so that the evaporator's lower coil segment is first-on/last-off (to avoid re-evaporation of condensate on dry lower coil segments).

Plan the Circuit A and Circuit B tubing segments carefully, mark each segment and check constantly as piping systems are assembled to avoid piping errors.

38AUD unit cannot be field-piped as a single-circuit/tandem system.

Connecting 40RU to 38AUD – The 40RU fan coil in sizes 12, 14 and 16 is a face-split coil design that also has its circuits designated as A and B. See Fig. 6. Note that the lower coil segment changes as the arrangement of the 40RU changes. In a vertical arrangement, the 40RU's lower coil segment is segment B; this segment should be connected to the 38AUD's Circuit A. In a horizontal arrangement, the 40RU's lower segment is now segment A; this segment should be connected to the 38AUD's Circuit A.

40RU Arrangement	Cooling Stage	40RU Coil Segment	Connect to 38AUD
Vertical	Y1 Y2	B A	Circuit A Circuit B
Horizontal	Y1 Y2	A B	Circuit A Circuit B

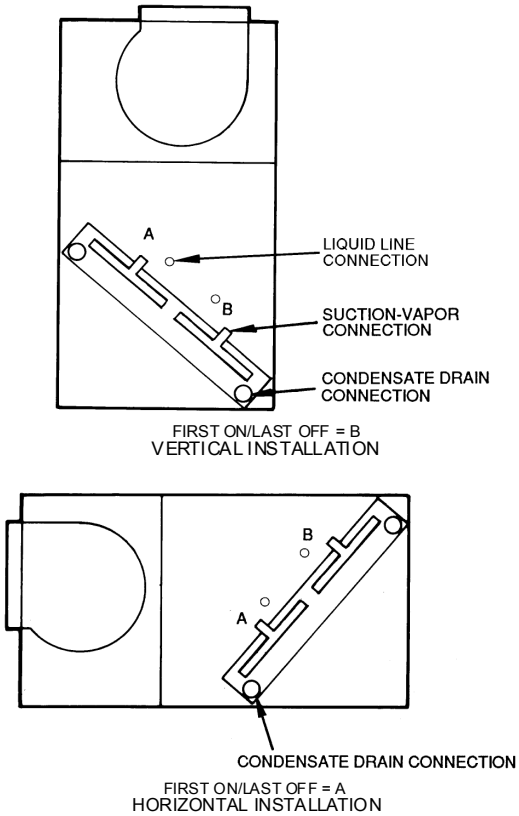

Fig. 6 — Typical Evaporator Coil Connections (40RU)

Note that refrigerant suction piping should be insulated.

INSTALL FILTER DRIER(S) AND MOISTURE INDICATOR(S) — Every unit MUST have a filter drier in the liquid line. 38AUD models require two filter driers (one in each liquid line). Locate the filter drier(s) at the indoor unit, close to the evaporator coil's thermal expansion valve (TXV) inlets.

38AU units include one (38AUZ) or two (38AUD) Puron-duty filter drier(s), shipped in cartons attached to the unit basepan. Remove the filter drier(s) and prepare to install in the liquid line(s) at the evaporator coil. Do not remove connection fitting plugs until ready to connect and braze the filter drier into the liquid line position.

Table 8 — Puron-duty Filter Drier(s)

Model-Size	Qty	Liquid Line OD	Desiccant Volume	Part Number Ref
38AUZ*07	1	3/8-in	8 cu. in.	KH43LG091
38AUZ*08	1	1/2-in	16 cu. in.	KH43LG085
38AUD*12	2	3/8-in	8 cu. in.	KH43LG091
38AUD*14	2	1/2-in	16 cu. in.	KH43LG085

Installation of liquid line moisture indicating sightglass in each circuit is recommended. Locate the sightglass(es) between the outlet of the filter drier and the TXV inlet.

Table 9 — Refrigerant Specialities Part Numbers.

LIQUID LINE SIZE (in.)	LIQUID LINE SOLENOID VALVE (LLSV)	LLSV COIL	SIGHT GLASS	FILTER DRIER
3/8	ALC-066208	AMG-24/50-60	HMI-1TT3	Provided with unit See Table 8
1/2	ALC-066209	AMG-24/50-60	HMI-1TT4	
5/8	ALC-066212	AMG-24/50-60	HMI-1TT5	

38AUD units require TWO sets of parts.

Refer to Table 9 for recommendations on refrigeration specialties.

In some applications, depending on space and convenience requirements, it may be desirable to install 2 filter driers and sight glasses in a single circuit application. One filter drier and sight glass may be installed at A locations in Fig. 7, or 2 filter driers and sight glasses may be installed at B locations.

Select the filter drier for maximum unit capacity and minimum pressure drop. Complete the refrigerant piping from the indoor unit to the outdoor unit before opening the liquid and suction lines at the outdoor unit.

INSTALL LIQUID LINE SOLENOID VALVE —
It is recommended that a solenoid valve be placed in the main liquid line (see Fig. 7) between the condensing unit and the evaporator coil. Locate the solenoid valve at the outlet end of the liquid line, near the evaporator coil connections, with flow direction arrow pointed at the evaporator coil. Refer to Table 9. (A liquid line solenoid valve is required when the liquid line length exceeds 23 m [75 ft].) This valve prevents refrigerant migration (which causes oil dilution) to the compressor during the off cycle, at low outdoor ambient temperatures. Wire the solenoid in parallel with the compressor contactor coil (see Fig. 7). This means of electrical control is referred to as solenoid *drop* control.

CAPACITY CONTROL LIQUID LINE SOLENOID VALVE
Evaporator capacity control via liquid solenoid valve is not recommended for use with 38AU models.

MAKE PIPING CONNECTIONS — Piping connections at the 38AU unit are ball valves with stub tube extensions. Do not open the unit service valves until all interconnecting tube brazing as been completed.

The stub tube connections include ¼-in SAE service fittings with Schrader valve cores (see Fig. 9). Before making any brazed connections to the unit service valves, remove both Schrader valve caps and cores and save for re-installation. Connect a source for nitrogen to one of these service fittings during tube brazing to prevent the formation of copper oxides inside the tubes at brazed joints.

When connecting the field tubing to the 38AU service valves, wrap the valves in wet rags to prevent overheating

Pressure-test all joints from outdoor unit connections over to the evaporator coil, using nitrogen as pressure and with soap-and-bubbles.

When pressure-testing is completed, remove the nitrogen source at the outdoor unit service valves and re-install the two Schrader valve cores. Torque the cores to 23-34 N-cm (2-3 in-lbs).

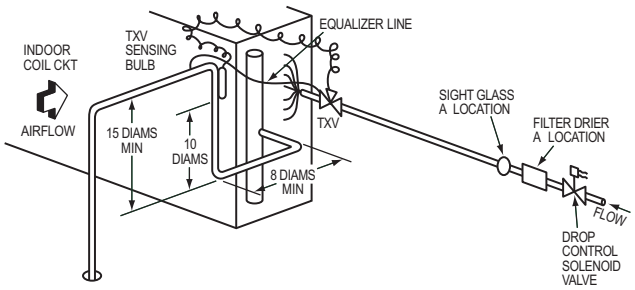

Single Circuit Coil Piping Configuration
For single compressor condensing units

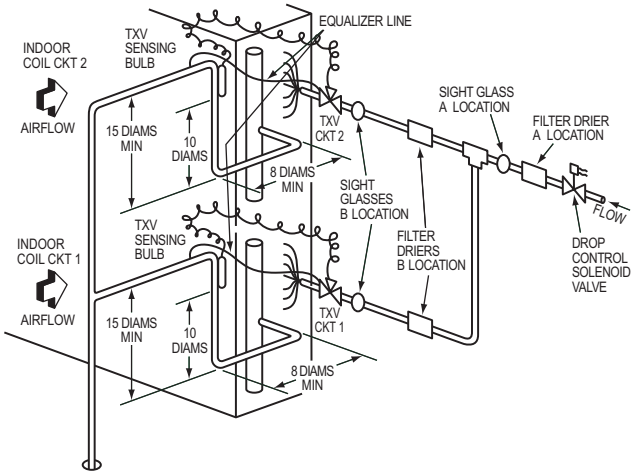

Dual Circuit Coil Piping Configuration
For single compressor condensing units

LEGEND
TXV — Thermostatic Expansion Valve

Fig. 7 — Location of Sight Glass(es) and Filter Driers Typical 38AUZ Systems

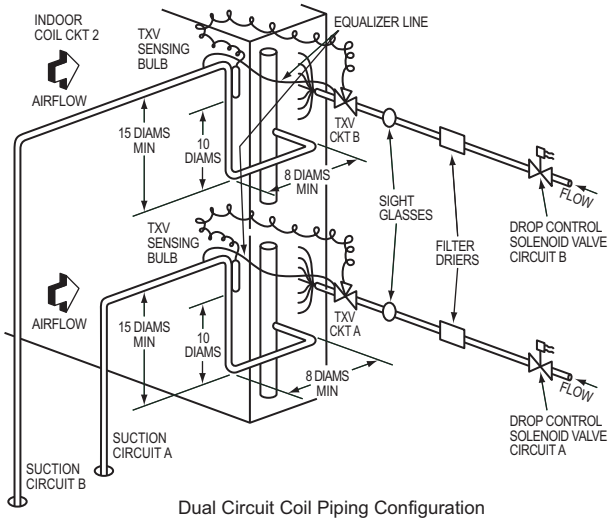

Dual Circuit Coil Piping Configuration
For two circuit condensing units

LEGEND

TXV — Thermostatic Expansion Valve

Fig. 8 — Location of Sight Glass(es) and Filter Driers Typical 38AUD Systems

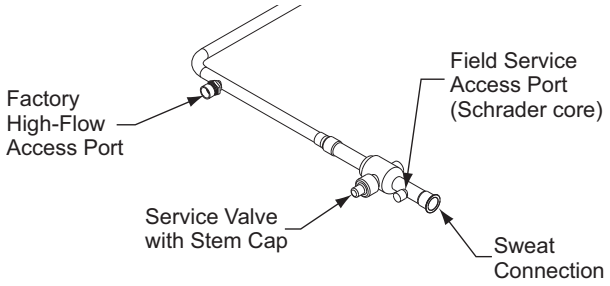

Fig. 9 — Typical Piping Connection Assembly

EVACUATION/DEHYDRATION — Evacuate and dehydrate the connected refrigeration system(s) (excluding the 38AU unit) to 500 microns using a two-stage vacuum pump attached to the service ports outside the 38AU service valves, following description in GTAC II, Module 4, System Dehydration.

⚠ WARNING

UNIT OPERATION AND SAFETY HAZARD

Failure to follow this warning could cause personal injury, death and/or equipment damage.

Puron® (R-410A) refrigerant systems operate at higher pressures than standard R-22 systems. Do not use R-22 service equipment or components on Puron refrigerant equipment.

PRELIMINARY CHARGE — Before starting the unit, charge R-410A liquid refrigerant into the high side of each 38AU circuit through the liquid service valve(s). The amount of refrigerant added must be at least 80% of the operating charge listed in Tables 5 or 6 for LINEAR line length LESS the factory charge quantity (if factory shipping charge has not been removed). See example below.

Allow high and low side pressures to equalize. If pressures do not equalize readily, charge R-410A vapor (using special service manifold with expansion device) into the suction line service port for the low side of system to assure charge in the evaporator. Refer to GTAC II, Module 5, Charging, Recover, Recycling, and Reclamation for liquid charging procedures.

Example:

38AUZ*08

60-ft (18.3 m) linear line length

Equivalent line length 90-ft (27.4 m)

Liquid Lift: 20-ft (6.1 m)

Select line sizes from Table 5 (38AUZ):

Liquid $^1/_2$ in

Suction 1-$^1/_8$ in.

Charge 12.9 lbs (at 75-ft linear length)

80% of Operating Charge:

0.80 x 12.9 = 10.3 lbs

Factory Shipping Charge: 4.9 lbs

Field-charge quantity: 10.3 lbs – 4.9 lbs = 5.4 lbs

For applications with linear line lengths greater than 100 ft (30.5 m), contact your local Carrier representative.

Step 6 — Install Accessories

Accessories requiring modifications to unit wiring should be completed now. These accessories may include Winter Start controls, Low Ambient controls, phase monitor, Compressor LOCout. Refer to the instructions shipped with the accessory.

Step 7 — Complete Electrical Connections

⚠ WARNING

ELECTRICAL SHOCK HAZARD

Failure to follow this warning could result in personal injury or death.

Do not use gas piping as an electrical ground. Unit cabinet must have an uninterrupted, unbroken electrical ground to minimize the possibility of personal injury if an electrical fault should occur. This ground may consist of electrical wire connected to unit ground lug in control compartment, or conduit approved for electrical ground when installed in accordance with local electrical codes or in absence of local codes, it is recommended that the U.S.A. standard ANSI/NFPA 70, National Electrical Code (NEC), be followed.

NOTE: Check all factory and field electrical connections for tightness. Field-supplied wiring shall conform with the limitations of 33°C (63°F) rise.

Field Power Supply —

If equipped with optional Powered Convenience Outlet: The power source leads to the convenience outlet's transformer primary are not factory connected. Installer must connect these leads according to required operation of the convenience outlet. If an always-energized convenience outlet operation is desired, connect the source leads to the line side of the unit-mounted disconnect. (Check with local codes to ensure this method is acceptable in your area.) If a de-energize via unit disconnect switch operation of the convenience outlet is desired, connect the source leads to the load side of the unit disconnect. On a unit without a unit-mounted disconnect, connect the source leads to compressor contactor C and indoor fan contactor IFC pressure lugs with unit field power leads.

All units are factory wired for the voltage shown on the nameplate. Refer to unit label diagram for additional information.

Field power wires are connected to the unit at line-side pressure lugs on compressor contactor C and TB1 (see wiring diagram label for control box component arrangement) or at factory-installed option non-fused disconnect switch. Use copper conductors only.

NOTE: TEST LEADS - Unit may be equipped with short leads (pigtails) on the field line connection points on contactor C or optional disconnect switch. These leads are for factory run-test purposes only; remove and discard before connecting field power wires to unit connection points. Make field power connections directly to line connection pressure lugs only.

⚠ WARNING

FIRE HAZARD

Failure to follow this warning could result in intermittent operation or performance satisfaction.

Do not connect aluminum wire between disconnect switch and condensing unit. Use only copper wire.

(See Fig.10.)

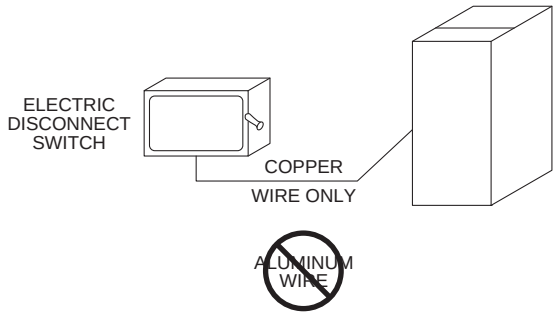

Fig. 10 — Disconnect Switch and Unit

Units Without Factory-Installed Disconnect —

When installing units, provide a disconnect switch of adequate size per local or national wiring code. Disconnect sizing data is provided on the unit informative plate. Locate on unit cabinet or within sight of the unit per national or local codes. Do not cover unit informative plate if mounting the disconnect on the unit cabinet.

Units with Factory-Installed Disconnect —

The factory-installed option disconnect switch is located in a weatherproof enclosure located under the main control box. The manual switch handle is accessible through an opening in the access panel.

All units -

All field wiring must comply with NEC and all local codes. Size wire based on MCA (Minimum Circuit Amps) on the unit informative plate. See Fig. 11 for power wiring connections to the unit power terminal block and equipment ground.

Provide a ground-fault and short-circuit over-current protection device (fuse or breaker) per NEC Article 440 (or local codes). Refer to unit informative data plate for MOCP (Maximum Over-current Protection) device size.

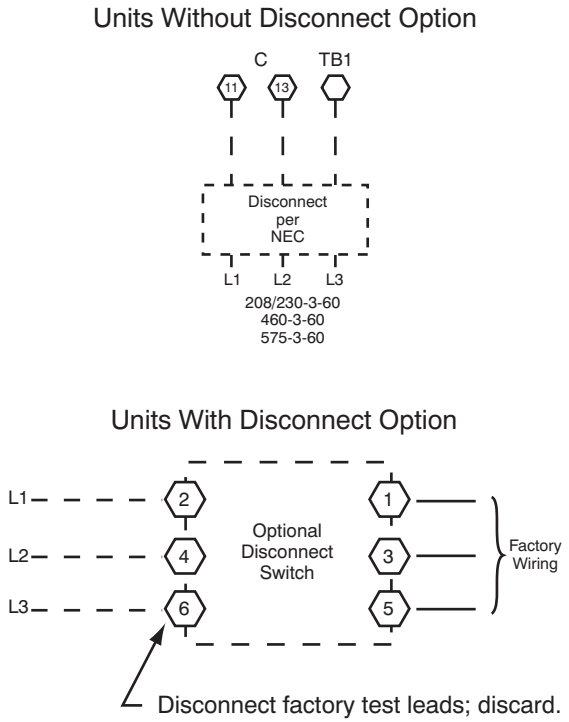

Fig.11 — Power Wiring Connections

Table 10 — American/European Wire Conversions

AMERICAN		EUROPEAN
Industry Standard Size	American Conversion (mm^2)	European Standard Size (mm^2)
20 AWG	0.52	0.5
18 AWG	0.82	1.0
16 AWG	1.30	1.5
14 AWG	2.08	2.5

All field wiring must comply with the NEC and local requirements.

Affix the crankcase heater warning sticker to the unit disconnect switch.

Convenience Outlets —

⚠ WARNING

ELECTRICAL OPERATION HAZARD

Failure to follow this warning could result in personal injury or death.

Units with convenience outlet circuits may use multiple disconnects. Check convenience outlet for power status before opening unit for service. Locate its disconnect switch, if appropriate, and open it. Tag-out this switch, if necessary.

Two types of convenience outlets are offered on 38AU models: Non-powered and unit-powered. Both types provide a 125-volt GFCI (ground-fault circuit-interrupter) duplex receptacle rated at 15-A behind a hinged waterproof access cover, located on the end panel of the unit. See Fig. 12.

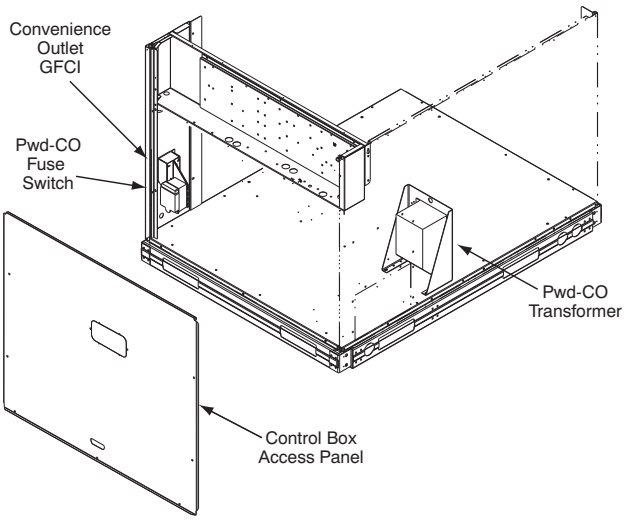

Fig. 12 — Convenience Outlet Location

Non-powered type: This type requires the field installation of a general-purpose 125-volt 15-A circuit powered from a source elsewhere in the building. Observe national and local codes when selecting wire size, fuse or breaker requirements and disconnect switch size and location. Route 125-v power supply conductors into the bottom of the utility box containing the duplex receptacle.

Unit-powered type: A unit-mounted transformer is factory-installed to stepdown the main power supply voltage to the unit to 115-v at the duplex receptacle. This option also includes a manual switch with fuse, located in a utility box and mounted on a bracket behind the convenience outlet; access is through the unit's control box access panel. See Fig. 12.

The primary leads to the convenience outlet transformer are not factory-connected. Selection of primary power source is a customer-option. If local codes permit, the transformer primary leads can be connected at the line-side terminals on the unit-mounted non-fused disconnect or HACR breaker switch; this will provide service power to the unit when the unit disconnect switch or HACR switch is open. Other connection methods will result in the convenience outlet circuit being de-energized when the unit disconnect or HACR switch is open. See Fig. 13.

Duty Cycle: The unit-powered convenience outlet has a duty cycle limitation. The transformer is intended to provide power on an intermittent basis for service tools, lamps, etc; it is not intended to provide 15-amps loading for continuous duty loads (such as electric heaters for overnight use). Observe a 50% limit on circuit loading above 8-amps (i.e., limit loads exceeding 8-amps to 30 minutes of operation every hour).

Test the GFCI receptacle by pressing the TEST button on the face of the receptacle to trip and open the receptacle. Check for proper grounding wires and power line phasing if the GFCI receptacle does not trip as required. Press the RESET button to clear the tripped condition.

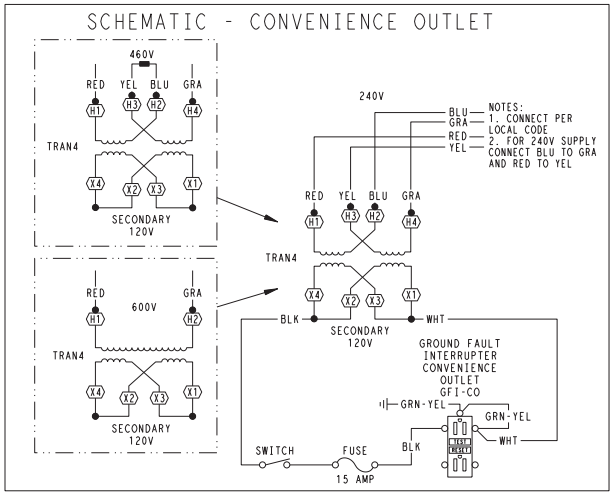

UNIT VOLTAGE	CONNECT AS	PRIMARY CONNECTIONS	TRANSFORMER TERMINALS
208, 230	240	L1: RED + YEL L2: BLU + GRA	H1 + H3 H2 + H4
460	480	L1: RED Splice BLU + YEL L2: GRA	H1 H2 + H3 H4
575	600	L1: RED L2: GRA	H1 H2

Fig. 13 - Powered Convenience Outlet Wiring

Fuse on power type: The factory fuse is a Bussman "Fusetron" T-15, non-renewable screw-in (Edison base) type plug fuse.

Using unit-mounted convenience outlets: Units with unit-mounded convenience outlet circuits will often require that two disconnects be opened to de-energize all power to the unit. Treat all units as electrically energized until the convenience outlet power is also checked and de-energization is confirmed. Observe and local codes, for use of convenience outlets.

Installing Weatherproof Cover –

A weatherproof while-in-use cover for the factory-installed convenience outlets is required. This cover cannot be factory-mounted due to its depth; it must be installed at unit installation. For shipment, the convenience outlet is covered with a blank cover plate.

The weatherproof cover kit is shipped in the unit's control box. The kit includes the hinged cover, a backing plate and gasket.

DISCONNECT ALL POWER TO UNIT AND CONVENIENCE OUTLET.

Remove the blank cover plate at the convenience outlet; discard the blank cover.

Loosen the two screws at the GFCI duplex outlet, until approximately $^1/_2$-in (13 mm) under screw heads are exposed. Press the gasket over the screw heads. Slip the backing plate over the screw heads at the keyhole slots and align with the gasket; tighten the two screws until snug (do not over-tighten).

Mount the weatherproof cover to the backing plate as shown in Fig. 14. Remove two slot fillers in the bottom of the cover to permit service tool cords to exit the cover. Check for full closing and latching.

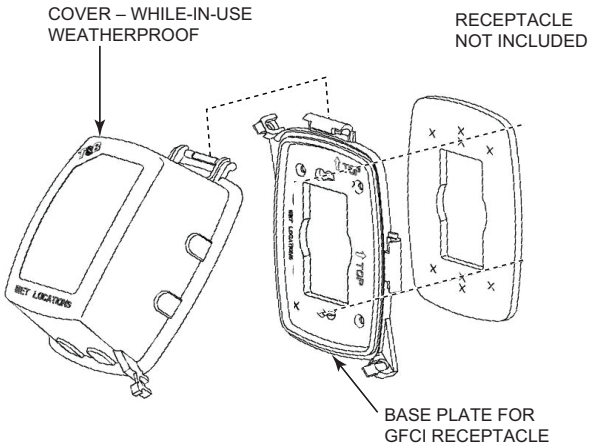

Fig. 14 — Weatherproof Cover Installation

All Units —

Voltage to compressor terminals during operation must be within voltage range indicated on unit nameplate. See Tables 10 and 11. On 3-phase units, voltages between phases must be balanced within 2% and the current within 10%. Use the formula shown in the legend for Tables 10 and 11, Note 5 (see page 19) to determine the percent of voltage imbalance. Operation on improper line voltage or excessive phase imbalance constitutes abuse and may cause damage to electrical components. Such operation would invalidate any applicable Carrier warranty.

Field Control Wiring — 38AU unit control voltage is 24 v. See Figs 23 and 24 for typical field control connections and the unit's label diagram for field-supplied wiring details. Route control wires to the 38AU unit through the opening in unit's end panel to the connections terminal board in the unit's control box.

Remainder of the system controls connection will vary according to the specific construction details of the indoor section (air handler or packaged fan coil). Figs 15 (38AUZ) and 16 (38AUD) depict typical connections to a Carrier 40RU fan coil unit. Plan for field connections carefully and install control wiring correctly per the project plan. Additional components and supplemental transformer accessory may be required.

The 38AU unit requires an external temperature control device. This device can be a thermostat (field-supplied) or a PremierLink controller (available as a field-installed accessory, for use on a Carrier Comfort Network or as a stand alone control).

Thermostat —

Install a Carrier-approved accessory thermostat according to installation instructions included with the accessory. Locate the thermostat accessory on a solid wall in the conditioned space to sense average temperature in accordance with the thermostat installation instructions.

38AUZ Unit – 38AUZ unit is a single-stage cooling unit. If no economizer function is required, select a single-stage cooling thermostat. If an integrated economizer function is required, select a two—stage cooling thermostat.

38AUD Unit – 38AUD unit is a two-stage cooling unit. Select a two-stage cooling thermostat.

Select a thermostat cable or equivalent single leads of different colors with minimum of four leads for 38AUZ unit or five leads for 38AUD units. Check the thermostat installation instructions for additional features which might require additional conductors in the cable.

For wire runs up to 15 m (50 ft.), use no. 18 AWG (American Wire Gage) insulated wire (35°C minimum). For 15 to 23 m (50 to 75 ft.), use no. 16 AWG insulated wire (35°C minimum). For over 23 m (75 ft.), use no. 14 AWG insulated wire (35°C minimum). All wire sizes larger than no. 18 AWG cannot be directly connected to the thermostat and will require a junction box and splice at the thermostat.

PremierLink (accessory installation) – Refer to Form 33CS-58SI for details on connecting the PremierLink controller and its various sensors.

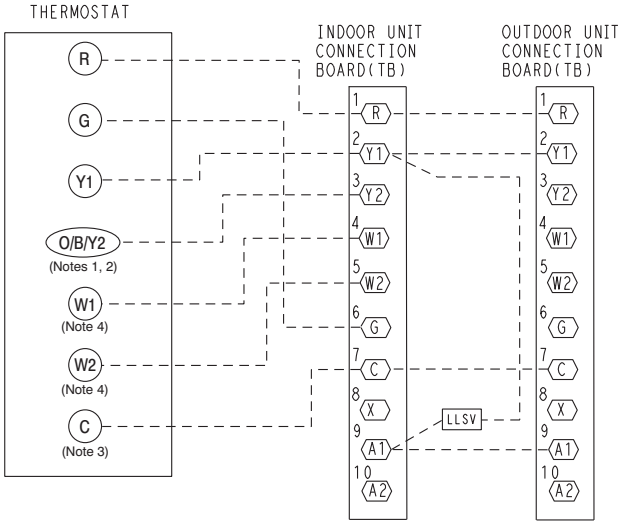

Note 1: Typical multi-function marking. Follow manufacturer's configuration instructions to select Y2.
Note 2: Y2 to economizer required on single-stage cooling units when integrated economizer function is desired
Note 3: Connect only if thermostat requires 24-vac power source.
Note 4: Connect W1 and W2 if supplemental heaters are installed
– – – Field Wiring

Fig. 15 — Typical Remote Thermostat Connections — 38AUZ

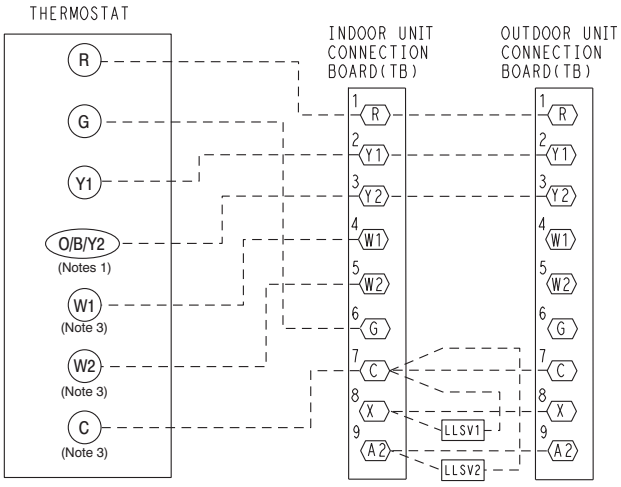

Note 1: Typical multi-function marking. Follow manufacturer's configuration instructions to select Y2.
Note 2: Connect only if thermostat requires 24-vac power source.
Note 3: Connect W1 and W2 if supplemental heaters are installed
– – – Field Wiring

Fig. 16 — Typical Remote Thermostat Connections — 38AUD

External Devices – The 38AU control transformers provide 24-v NEC Class 2 power sources to energize external control devices. These devices will include the indoor fan motor contactor (or control relay). These devices may also include liquid line solenoid valve (two on 38AUD model), economizer control relay, supplemental electric heater contactors or control relays and other devices selected by system designer.

Control transformer TRAN1 provides control power through terminal R to C on the CTB's field connection terminal strip for supply fan motor interlock. This source may also be used to energize economizer control relay and electric heater contactors or relays. Maximum available power is 20 va. Check concurrent loadings by external control devices. If the maximum concurrent loading exceeds 20 va, purchase and install the accessory Transformer-Relay package (available for 208/230 and 460-v units).

Control transformer TRAN3 provides control power through terminals A1 (9) and A2 (10) to C for liquid line solenoids. Maximum available power is 40 va. These outputs are switched ON/OFF by the Solenoid Valve Relays.

Table 11 — Electrical Data — 38AUZ*07-08 60 Hz Units

UNIT SIZE 38AU	NOMINAL VOLTAGE	VOLTAGE RANGE‡		COMPRESSOR		OUTDOOR FAN MOTORS (ea)			WITHOUT POWERD CONVENIENCE OUTLET		WITH POWERD CONVENIENCE OUTLET	
	V-Ph-Hz	MIN	MAX	RLA	LRA	WATTS	FLA	QTY	MCA	MOCP	MCA	MOCP
Z*07	400-3-50	380	420	9.7	64	270	0.7	2	13.5	20	15.9	25
Z*08	400-3-50	380	420	12.2	101	270	0.7	2	16.7	25	19.0	30

Table 12 — Electrical Data — 38AUD*12-14 60 Hz Units

UNIT SIZE 38AU	NOMINAL VOLTAGE	VOLTAGE RANGE‡		COMPRESSOR 1		COMPRESSOR 2		OUTDOOR FAN MOTORS (ea)			WITHOUT POWERD CONVENIENCE OUTLET		WITH POWERD CONVENIENCE OUTLET	
	V-Ph-Hz	MIN	MAX	RLA	LRA	RLA	LRA	WATTS	FLA	QTY	MCA	MOCP	MCA	MOCP
D*12	208/230-3-60	380	420	7.8	51.5	7.8	51.5	270	0.7	2	19.0	25	21.3	30
D*14	208/230-3-60	380	420	10.6	74	10.6	74	270	0.7	2	25.3	30	27.6	30

LEGEND AND NOTES FOR TABLES 11 & 12

FLA — Full Load Amps
LRA — Locked Rotor Amps
MCA — Minimum Circuit Amps
MOCP — Maximum Overcurrent Protection
NEC — National Electrical Code
RLA — Rated Load Amps

‡ Units are suitable for use on electrical systems where voltage supplied to the unit terminals is not below or above the listed limits.

NOTES:
1. The MCA and MOCP values are calculated in accordance with the NEC, Article 440.
2. Motor RLA and LRA values are established in accordance with Underwriters' Laboratories (UL), Standard 1995.
3. The 575-v units are UL, Canada-listed only.
4. Convenience outlet is available as a factory-installed option and is 115-v, 1 ph, 60 Hz.

5. **Unbalanced 3-Phase Supply Voltage**
Never operate a motor where a phase imbalance in supply voltage is greater than 2%. Use the following formula to determine the percentage of voltage imbalance.

$$\text{\% Voltage Imbalance} = 100 \times \frac{\text{max voltage deviation from average voltage}}{\text{average voltage}}$$

Example: Supply voltage is 230-3-60

AB = 224 v
BC = 231 v
AC = 226 v

$$\text{Average Voltage} = \frac{(224 + 231 + 226)}{3} = \frac{681}{3}$$

$$= 227$$

Determine maximum deviation from average voltage.
(AB) 227 – 224 = 3 v
(BC) 231 – 227 = 4 v
(AC) 227 – 226 = 1 v
Maximum deviation is 4 v.
Determine percent of voltage imbalance.

$$\text{\% Voltage Imbalance} = 100 \times \frac{4}{227}$$

$$= 1.76\%$$

This amount of phase imbalance is satisfactory as it is below the maximum allowable 2%.

IMPORTANT: If the supply voltage phase imbalance is more than 2%, contact your local electric utility company immediately.

PRE-START-UP

IMPORTANT: Before beginning Pre-Start-Up or Start-Up, review Start-Up Checklist at the back of this book. The Checklist assures proper start-up of a unit and provides a record of unit condition, application requirements, system information, and operation at initial start-up.

⚠ CAUTION

UNIT DAMAGE HAZARD

Do not attempt to start the condensing unit, even momentarily, until the following steps have been completed. Compressor damage may result.

System Check

1. Check all air handler(s) and other equipment auxiliary components. Consult the manufacturer's instructions regarding any other equipment connected to the condensing unit. If the unit has field-installed accessories, be sure all are properly installed and correctly wired. If used, the airflow switch must be properly installed.
2. Be sure the unit is properly leak checked and dehydrated.
3. Check tightness of all electrical connections.
4. Open the liquid line and suction line service valves.
5. Be sure the unit is properly charged. See "Preliminary Charge", below.
6. The electrical power source must agree with the unit's nameplate rating.
7. *The crankcase heater must be firmly attached to the compressor crankcase. Be sure the crankcase is warm (heater must be on for 24 hours before starting compressor).*

Turn On Crankcase Heater

Turn on the crankcase heater for 24 hours before starting the unit to be sure all the refrigerant is out of the oil. To energize the crankcase heater, proceed as follows:

1. Set the space thermostat set point above the space temperature so there is no demand for cooling.
2. Close the field disconnect.

Preliminary Charge

Before starting the unit, charge liquid refrigerant into the high side of the system(s) through the liquid service valve(s). The amount of refrigerant added must be at least 80% of the operating charge listed in the Physical Data table (Tables 1A through 2B, pages 4 through 7). Open the liquid line and suction line service valves. Allow high and low side pressures to equalize before starting compressor. If pressures do not equalize readily, charge vapor on low side of system to assure charge in the evaporator. Refer to GTAC II, Module 5, Charging, Recover, Recycling, and Reclamation for liquid charging procedures.

⚠ CAUTION

UNIT DAMAGE HAZARD

Prior to starting compressor, a preliminary charge of refrigerant must be added to avoid possible compressor damage.

START-UP

38AU Units

The compressor crankcase heater(s) must be on for 24 hours before start-up. After the heater has been on for 24 hours, the unit can be started. If no time elapsed since the preliminary charge step was completed, it is unnecessary to wait the 24-hour period.

Preliminary Checks

1. Check that electric power supply agrees with unit nameplate data.
2. Verify that the compressor crankcase heater is securely in place.
3. Check that the compressor crankcase heater has been on at least 24 hours.
4. Recheck for leaks using the procedure outlined in the Pre-Start-Up section, Leak Test and Dehydration. If any leaks are detected, repair as required. Evacuate and dehydrate as described in the Leak Test and Dehydration section.
5. Ensure that the preliminary charge has been added as described in the Pre-Start-Up section, Preliminary Charge.
6. All internal wiring connections must be tight, and all barriers and covers must be in place.

NOTE: The 38AU units are factory charged with the required amount of oil. If recharging in required, use Emkarate RL 32-3MAF for the 38AU units.

Compressor Rotation

On 3-phase units with scroll compressors, it is important to be certain that the compressor is rotating in the proper direction. 38AU units are equipped with a Comfort Alert Diagnostic Module (CADM). Alert Code 7 indicates reverse power phasing.

To correct phase order:

1. Turn off power to the unit, tag disconnect.
2. Reverse any two of the unit power leads.
3. Reapply power to the compressor, verify correct pressures.

To verify the compressor is rotating in the proper direction:

1. Connect service gages to the suction and liquid pressure fittings.
2. Energize the compressor.

The suction pressure should drop and the liquid pressure should rise, as is normal on any start-up.

Compressor Overload

This overload interrupts power to the compressor when either the current or internal motor winding temperature becomes excessive, and automatically resets when the internal temperature drops to a safe level. This overload may require up to 60 minutes (or longer) to reset. If the internal overload is suspected of being open, disconnect the electrical power to the unit and check the circuit through the overload with an ohmmeter or continuity tester.

Advanced Scroll Temperature Protection (ASTP)

A label located above the terminal box identifies Copeland Scroll compressor models that contain this technology. See Fig. 17. Advanced Scroll Temperature Protection (ASTP) is a form of internal discharge temperature protection, that unloads the scroll compressor when the internal temperature reaches approximately 300°F. At this temperature, an internal bi-metal disk valve opens and causes the scroll elements to separate, which stops compression. Suction and discharge pressures balance while the motor continues to run. The longer the compressor runs unloaded, the longer it must cool before the bi-metal disk resets. See Fig. 18.

Fig. 17 — Advanced Scroll Temperature Protection Label

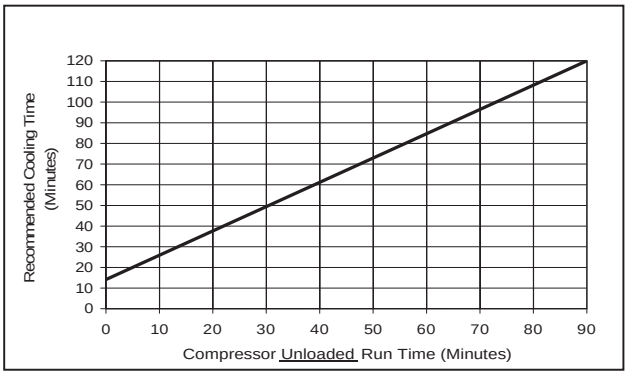

*Times are approximate.

NOTE: Various factors, including high humidity, high ambient temperature, and the presence of a sound blanket will increase cool-down times.

Fig. 18 — Recommended Minimum Cool-Down Time After Compressor is Stopped

To manually reset ASTP, the compressor should be stopped and allowed to cool. If the compressor is not stopped, the motor will run until the motor protector trips, which occurs up to 90 minutes later. Advanced Scroll Temperature Protection will reset automatically before the motor protector resets, which may take up to 2 hours.

Start Unit

Set the space thermostat to a set point above space temperature so that there is no demand for cooling. Close the 38 AU disconnect switch. Only the crankcase heater will be energized.

Reset the space thermostat below space temperature so that a call for cooling is ensured.

⚠ CAUTION

Never charge liquid into the low-pressure side of system. Do not overcharge. During charging or removal of refrigerant, be sure indoor-fan system is operating. Ensure both outdoor fan motors are running; bypass any Motormaster or mild-ambient control function.

Adjust Refrigerant Charge

The unit must be charged in Cooling mode only. Refer to Cooling Charging Charts, Fig. 19 through Fig. 22. Vary refrigerant until the conditions of the chart are met. Note that the charging charts are different from the type normally used. The charts are based on charging the units to the correct subcooling for the various operating conditions. Accurate pressure gage and temperature sensing device are required. Connect the pressure gage to the service port on the liquid line service valve. Mount the temperature sensing device on the liquid line close to the liquid line service valve, and insulate it so that outdoor ambient temperature does not affect the reading. Indoor airflow must be within the unit's normal operating range. Operate the unit for a minimum of 15 minutes. Ensure that pressure and temperature readings have stabilized. Plot the liquid pressure and temperature on chart and add or reduce the charge to meet the curve. Adjust the charge to conform with the charging chart, using the liquid pressure and temperature to read the chart.

FINAL CHECKS

Ensure that all safety controls are operating, control panel covers are on, and the service panels are in place.

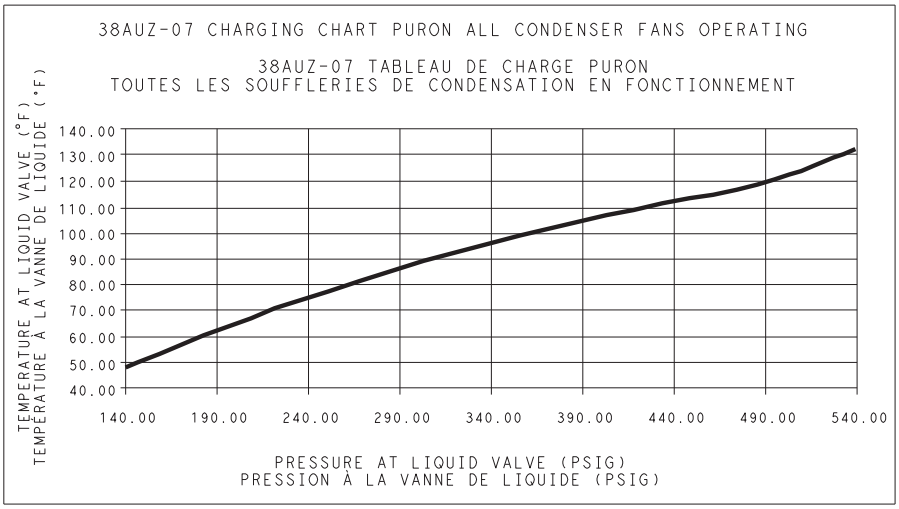

Fig. 19 — 38AUZ*07 Charging Chart

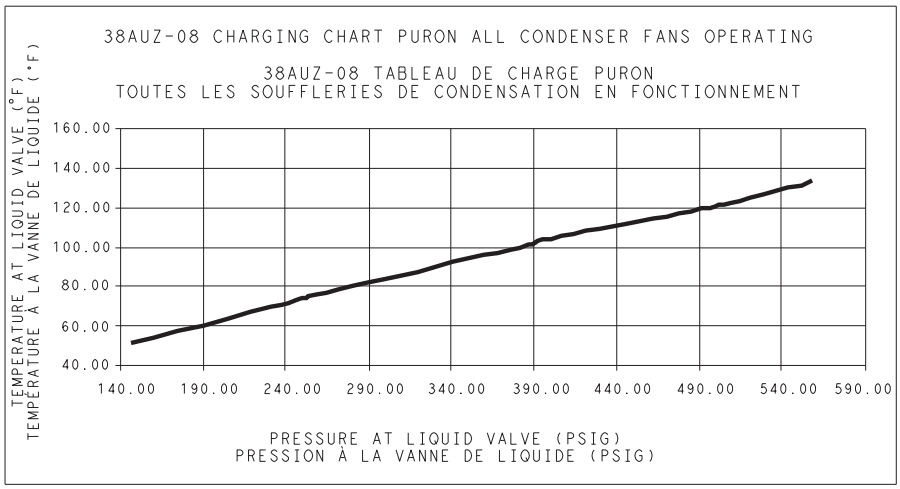

Fig. 20 — 38AUZ*08 Charging Chart

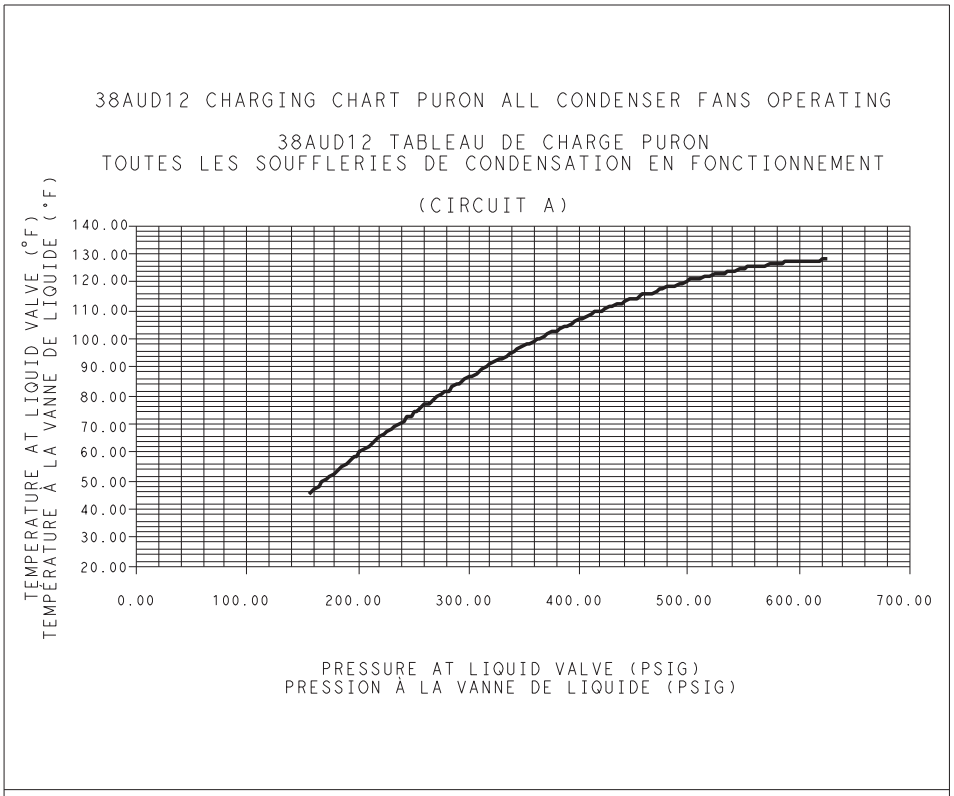

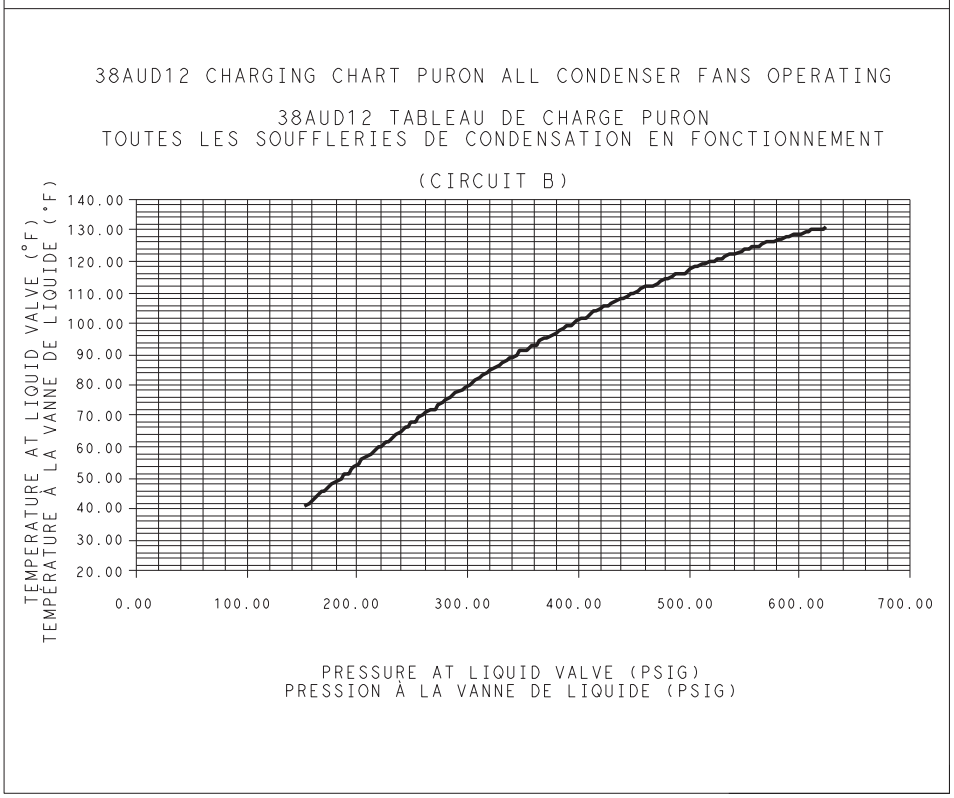

Fig. 21 — 38AUD*12 Charging Chart

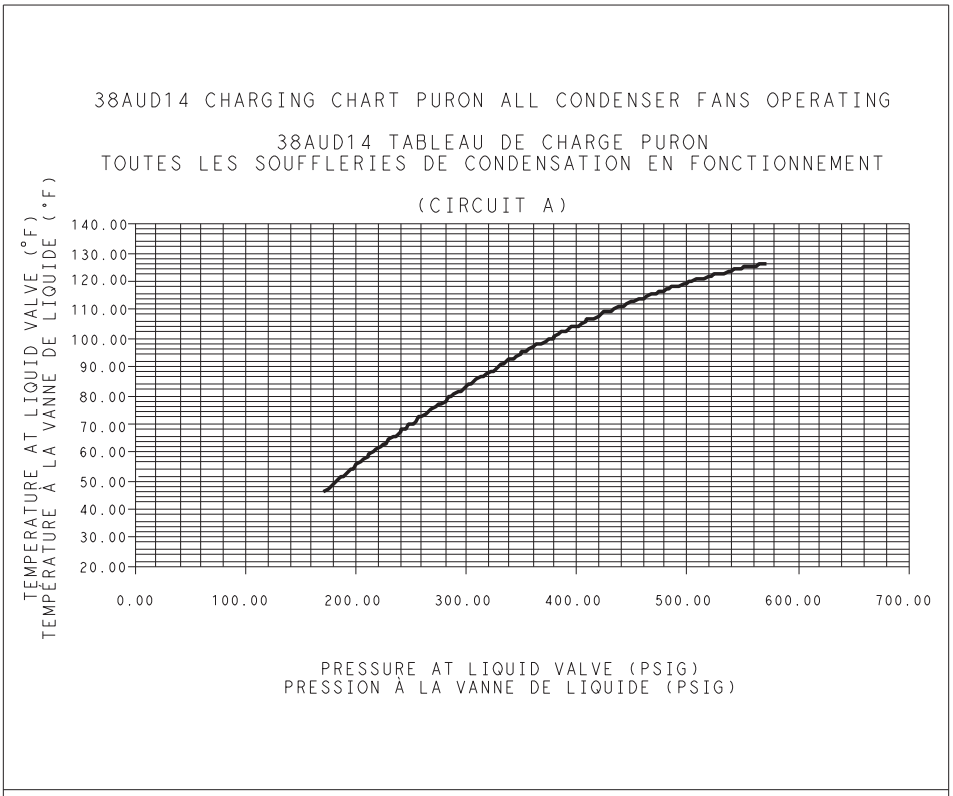

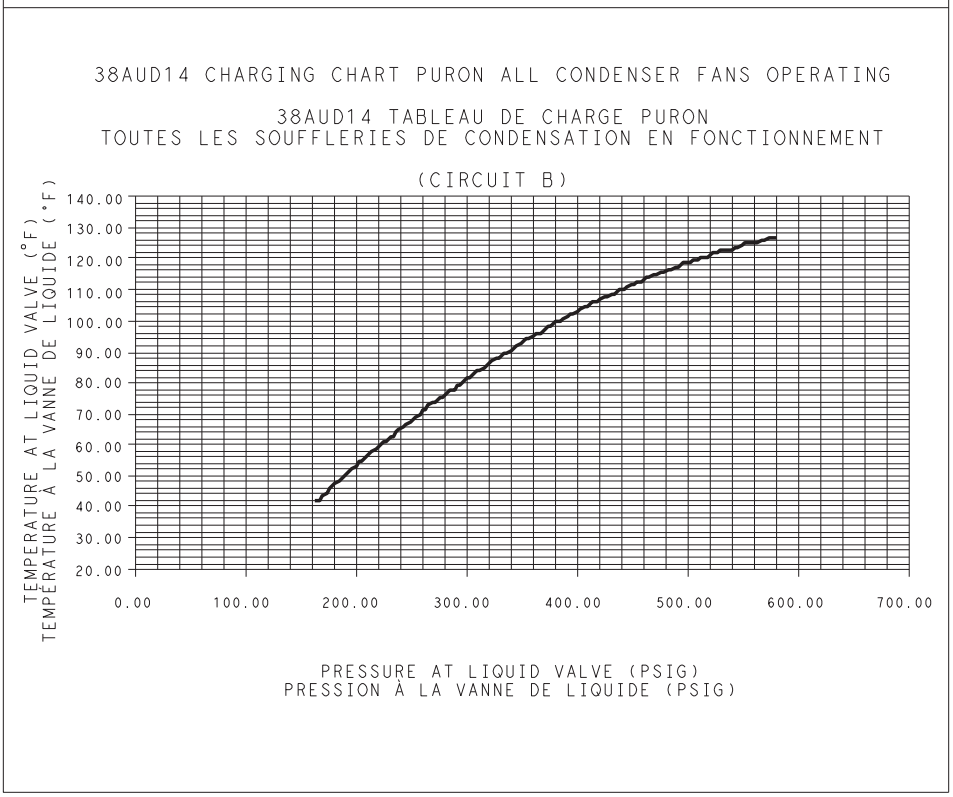

Fig. 22 — 38AUD*14 Charging Chart

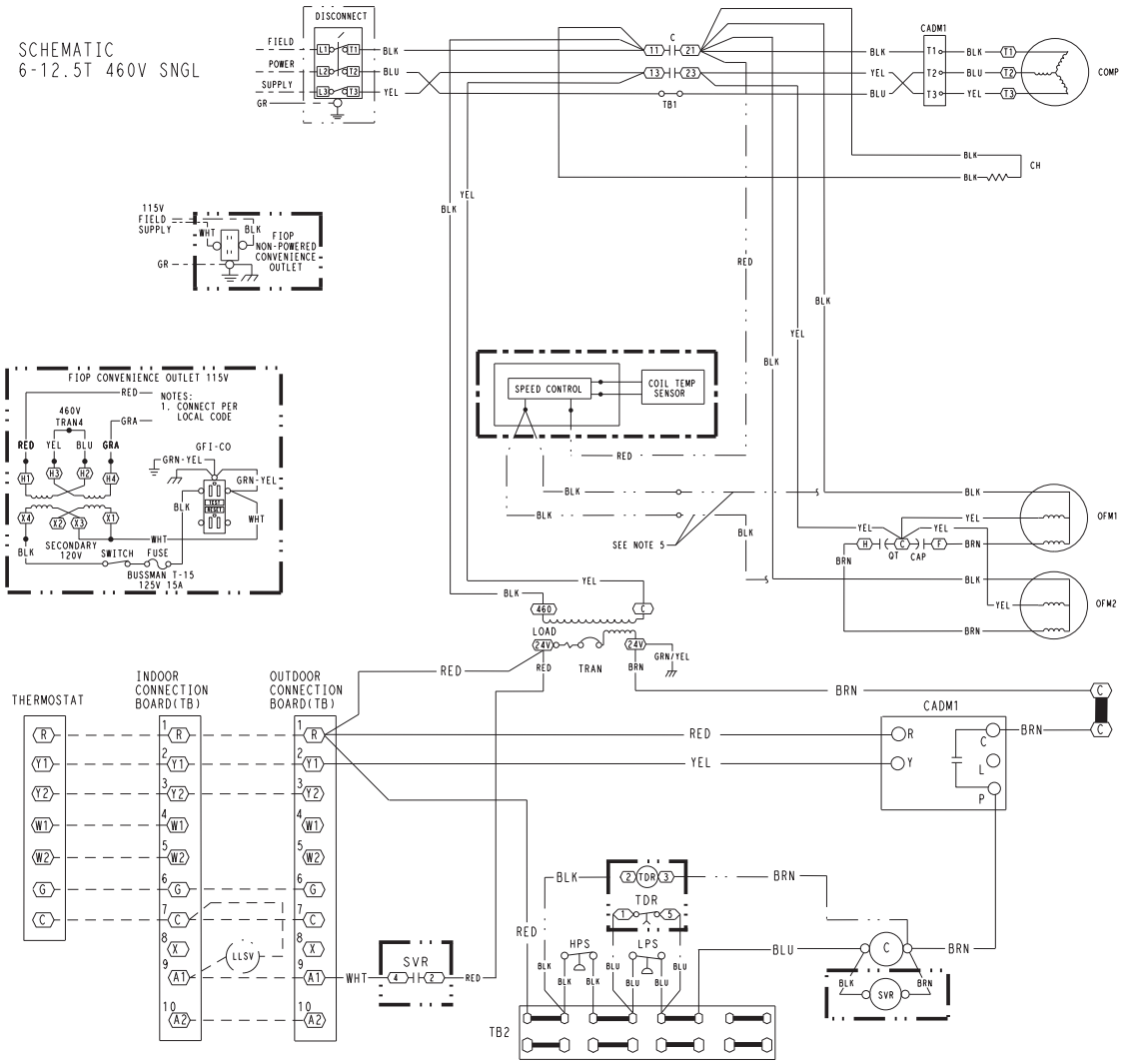

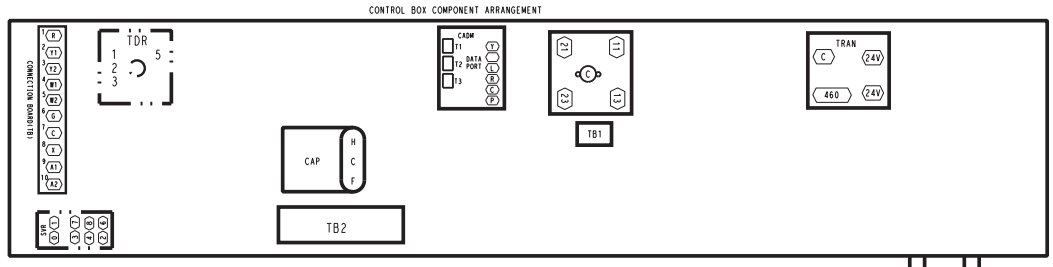

FIELD CONTROL WIRING

- FIELD SPLICE
- MARKED WIRE
- TERMINAL(MARKED)
- TERMINAL(UNMARKED)
- TERMINAL BLOCK
- SPLICE
- FACTORY WIRING
- FIELD CONTROL WIRING
- FIELD POWER WIRING
- ACCESSORY OR OPTIONAL WIRING
- TO INDICATE COMMON POTENTIAL ONLY, NOT TO REPRESENT WIRING

LEGEND

C	CONTACTOR, COMPRESSOR
CAP	CAPACITOR
CADM	COMFORT ALERT - DIAGNOSTICS MODULE
CH	CRANKCASE HEATER
COMP	COMPRESSOR MOTOR
EQUIP	EQUIPMENT
FU	FUSE
GR	GROUND
HPS	HIGH PRESSURE SWITCH
LLSV	LIQUID LINE SOLENOID VALVE
LPS	LOW PRESSURE SWITCH
OFM	OUTDOOR FAN MOTOR
OFR	OUTDOOR FAN RELAY
QT	QUADRUPLE TERMINAL
SVR	SOLENOID VALVE RELAY
TB	TERMINAL BLOCK
TDR	TIME DELAY RELAY
TRAN	TRANSFORMER

FIELD WIRING — DISCONNECT PER NEC

NOTES:

1. IF ANY OF THE ORIGINAL WIRE FURNISHED MUST BE REPLACED, IT MUST BE REPLACED WITH TYPE 90 C WIRE OR ITS EQUIVALENT.
2. USE COPPER CONDUCTORS ONLY.
3. COMPRESSORS AND FAN MOTORS ARE THERMALLY PROTECTED. THREE PHASE MOTORS ARE PROTECTED AGAINST PRIMARY SINGLE PHASING CONDITIONS.
4. TRANSFORMER IS WIRED FOR 460V UNIT.
5. ON UNITS WITH SPEED CONTROL, REMOVE OFM1 AND OFM2 BLK WIRES FROM COMPRESSOR CONTACTOR TERMINAL 21 AND CONNECT TO BLK WIRES FROM SPEED CONTROL.

Fig. 23 — Typical 38AUZ Wiring Diagram (50Hz Single Circuit Unit Shown)

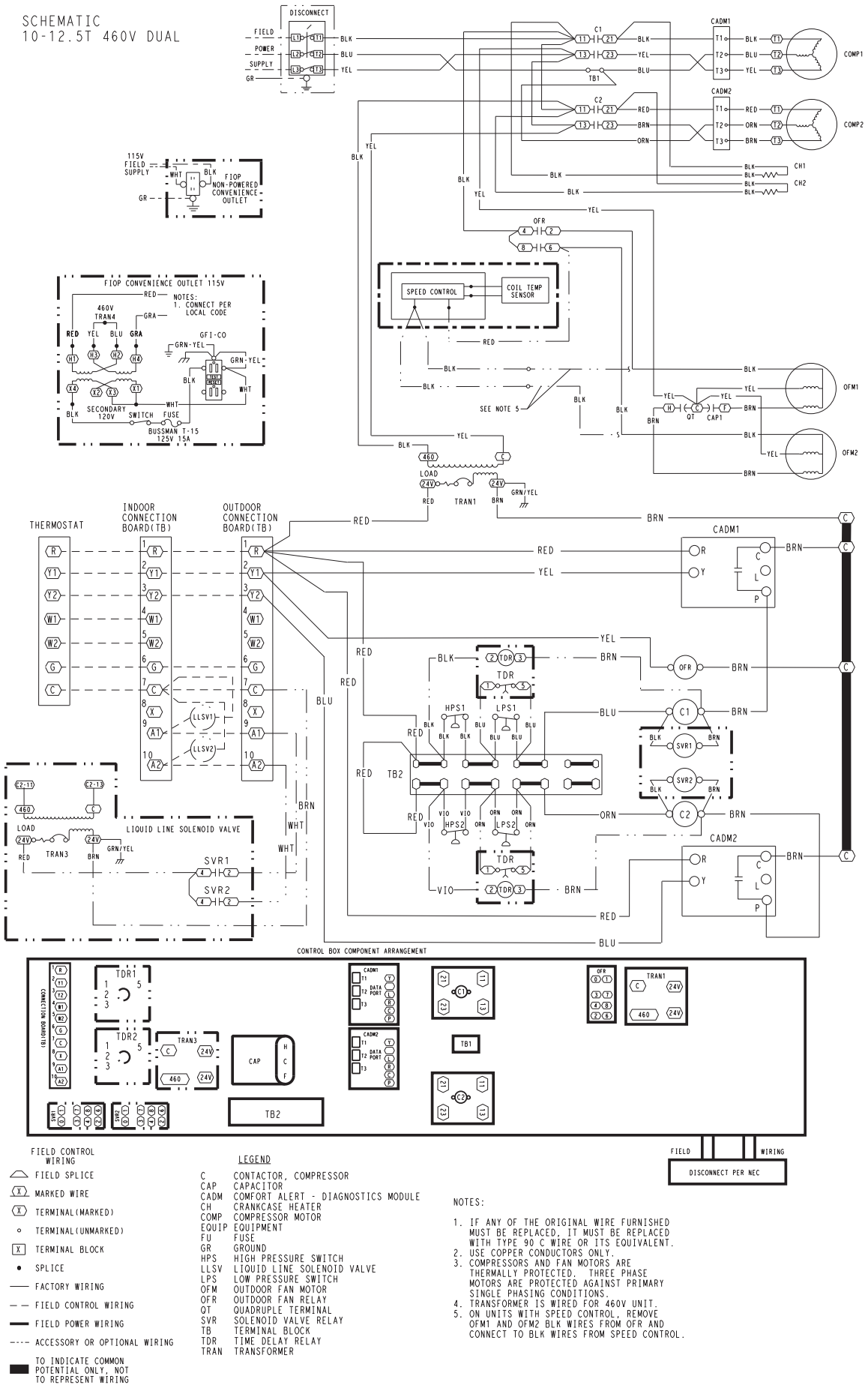

Fig. 24 — Typical 38AUD Wiring Diagram (50Hz Dual Circuit Unit Shown)

OPERATING SEQUENCE

Base Unit Controls

Indoor (Supply) Fan

The indoor fan contactor (IFC) is remotely located at the fan coil or fan section. If the thermostat fan operation is selected as Continuous, the IFC is energized and the indoor (supply) fan motor runs continuously. If the thermostat fan operation is selected as Automatic, the IFC will be energized on a call for Cooling; indoor (supply) fan motor runs. When thermostat call for Cooling is satisfied, the IFC is de-energized and indoor (supply) fan motor stops.

Cooling, Unit Without Economizer

On a thermostat call for Cooling, IFC will be energized and indoor (supply) fan motor runs. Thermostat contact TC1 closes; terminal Y1 at 38AU unit receives 24-v. 24-v received at CADM terminal Y. If anti-recycle time delay period has not expired, CADM relay will remain open, preventing compressor start. When safety pressure switches are closed, the liquid line solenoid valve opens. When CADM time delay expires, the compressor contactor is energized; both outdoor fan motors start and compressor starts.

38AUD Second-Stage Cooling —
On a thermostat calling for Stage 2 Cooling, thermostat contact TC2 closes; terminal Y2 at 38AUD unit receives 24-v. 24-v received at CADM2 terminal Y. If anti-recycle time delay period has not expired, CADM relay will remain open, preventing compressor start. When safety pressure switches are closed, the liquid line solenoid valve opens. When CAMD time delay expires, the compressor contactor C2 is energized; Compressor B starts.

When space cooling load is satisfied, thermostat contacts TC1 open, removing 24-v at 38AU terminal Y1. Compressor and outdoor fan motors stop. Liquid line solenoid valve is de-energized and valve closes. CADM begins its three-minute anti-recycle time delay.

If either the Low Pressure Switch or High Pressure Switch opens while thermostat contact TC1 (or TC2 on 38ARD) remains closed, the compressor contactor is de-energized (both fan motors and compressor stop) and liquid line solenoid is de-energized (valve closes). CADM initiates a TRIP event (cooling demand sensed at CADM terminal Y but no current is measured at T1, T2, T3 motor sensors); CADM relay opens and RED LED is illuminated. TRIP condition maintains lockout of compressor operation until CADM is manually reset. Reset CADM by cycling unit main power.

Complete system shutdown may be caused by loss of main power, open compressor internal overload, open low-pressure or high-pressure switch, or a fault detected by the CADM logic. Compressor operation without cooling may indicate the compressor's ASTP feature is active (unit sizes 12 and 14 only); disconnect unit power and allow compressor to cool. See Service section for further details.

Cooling, Unit With Economizer

Refer to fan coil unit installation instructions and economizer accessory installation instructions for operating sequences when system is equipped with accessory economizer.

Heating

Refer to fan coil unit installation instructions and accessory heating device installation instructions for operating sequences in heating mode.

ROUTINE SYSTEM MAINTENANCE

These items should be part of a routine maintenance program, to be checked every month or two, until a specific schedule for each can be identified for this installation:

Quarterly Inspection (and 30 days after initial start)

Indoor section

- Condenser coil cleanliness checked.
- Return air filter replacement
- Outdoor hood inlet filters cleaned
- Belt tension checked
- Belt condition checked
- Pulley alignment checked
- Fan shaft bearing locking collar tightness checked
- Condensate drain checked

Seasonal Maintenance

These items should be checked at the beginning of each season (or more often if local conditions and usage patterns dictate):

Air Conditioning

- Condenser fan motor mounting bolts tightness
- Compressor mounting bolts
- Condenser fan blade positioning
- Control box cleanliness and wiring condition
- Wire terminal tightness
- Refrigerant charge level
- Evaporator coil cleaning
- Evaporator blower motor amperage

Heating

- Power wire connections
- Fuses ready
- Manual-reset limit switch is closed

Economizer or Outside Air Damper

- Inlet filters condition
- Check damper travel (economizer)
- Check gear and dampers for debris and dirt

SERVICE

Refrigeration System

⚠ CAUTION

EQUIPMENT DAMAGE HAZARD

Failure to follow this caution may result in damage to equipment.

This system uses Puron® refrigerant which has higher pressures than R-22 and other refrigerants. No other refrigerant may be used in this system. Gage set, hoses, and recovery system must be designed to handle Puron®. If you are unsure consult the equipment manufacturer.

Compressor Oil —

⚠ CAUTION

EQUIPMENT DAMAGE HAZARD

Failure to follow this caution may result in damage to equipment.

The compressor in a Puron system uses a polyolester (POE) oil. This oil is extremely hygroscopic, meaning it absorbs water readily. POE oils can absorb 15 times as much water as other oils designed for HCFC and CFC refrigerants. Take all necessary precautions to avoid exposure of the oil to the atmosphere.

Servicing Systems on Roofs With Synthetic Materials — POE (polyolester) compressor lubricants are known to cause long term damage to some synthetic roofing materials. Exposure, even if immediately cleaned up, may cause embrittlement (leading to cracking) to occur in one year or more. When performing any service which may risk exposure of compressor oil to the roof, take appropriate precautions to protect roofing. Procedures which risk oil leakage include but are not limited to compressor replacement, repairing refrigerants leaks, replacing refrigerant components such as filter drier, pressure switch, metering device, coil, accumulator, or reversing valve.

SYNTHETIC ROOF PRECAUTIONARY PROCEDURE

1. Cover extended roof working area with an impermeable polyethylene (plastic) drop cloth or tarp. Cover an approximate 3.3 x 3.3 m (10 x 10 ft) area.
2. Cover area in front of the unit service panel with a terry cloth shop towel to absorb lubricant spills and prevent run-offs, and protect drop cloth from tears caused by tools or components.
3. Place terry cloth shop towel inside unit immediately under component(s) to be serviced and prevent lubricant run-offs through the louvered openings in the base pan.
4. Perform required service.
5. Remove and dispose of any oil contaminated material per local codes.

Liquid Line Filter Drier — The factory-provided filter drier is specifically designed to operate with Puron®. Replace the filter drier with factory-authorized components only with a filter drier with desiccant made from 100% molecular sieve grade XH-11. Filter drier must be replaced whenever the refrigerant system is opened.

When removing a filter drier, use a tubing cutter to cut the drier from the system. **Do not unsweat a filter drier** from the system. Heat from unsweating will release moisture and contaminants from drier into system.

Field Refrigerant Access Ports — Field service access to refrigerant pressures is through the access ports located at the service valves (see Figs 27 and 29). These ports are ¼-in SAE Flare couplings with Schrader check valves and service caps. Use these ports to admit nitrogen to the field tubing during brazing, to evacuate the tubing and evaporator coil, to admit initial refrigerant charge into the low-side of the system and when checking and adjusting the system refrigerant charge. When service activities are completed, ensure the service caps are in place and secure; check for leaks. If the Schrader check valve must be removed and re-installed, tighten to 23-34 N-cm (2-3 in-lbs).

Factory High-Flow Access Ports — There are two additional access ports in the system - on the suction tube between the compressor and the suction service valve and on the liquid tube near the liquid service valve (see Figs 28 and 30). These are brass fittings with black plastic caps. The hose connection fittings are standard ¼-in SAE Male Flare couplings.

The brass fittings are two-piece High Flow valves, with a receptacle base brazed to the tubing and an integral spring-closed check valve core screwed into the base. (See Fig. 25) This check valve is permanently assembled into this core body and cannot be serviced separately; replace the entire core body if necessary. Service tools are available from RCD that allow the replacement of the check valve core without having to recover the entire system refrigerant charge. Apply compressor refrigerant oil to the check valve core's bottom o-ring. Install the fitting body with 1085 ±23 N-cm (96 ±-10 in-lbs) of torque; do not overtighten.

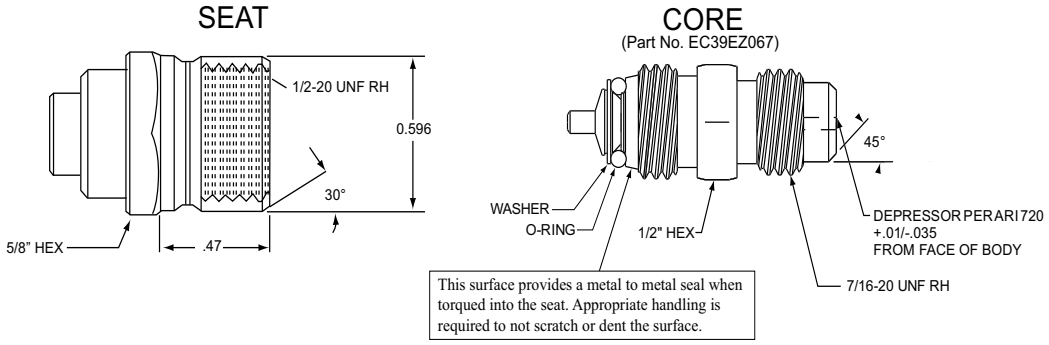

Fig. 25 — CoreMax Access Port Assembly

Comfort Alert Diagnostic Module

The Comfort Alert Diagnostic Module (CADM) monitors and analyzes data from the Copeland Scroll® three-phase compressor and the thermostat demand. The CADM also provides a 3-minute anti-recycle time delay to compressor cycling.

The CADM detects causes for electrical and system related failures without any sensors. Flashing LEDs communicate the Alert codes to guide service technicians in accurately and quickly troubleshooting the system and determining root cause for the failure.

Inputs to the CADM include 24-vac power, thermostat Y1, compressor contactor coil (common side) and compressor power leads (from the compressor contactor).

Input	Terminal	Voltage
Control Power	R	24-V
Control Common	C	24-V
Cooling	Y	24-V
Contactor Coil	P	24-V
Line A	T1	Line
Line B	T2	Line
Line C	T3	Line

Control of the compressor contactor coil is through a normally-closed (power on the module) contact between terminals P and C.

Communications of status and alert conditions is through three LEDs located on the top edge of the module housing (see Fig. 26): POWER (green), ALERT (yellow), and TRIP (red).

The POWER LED indicates the presence of control power to the CADM.

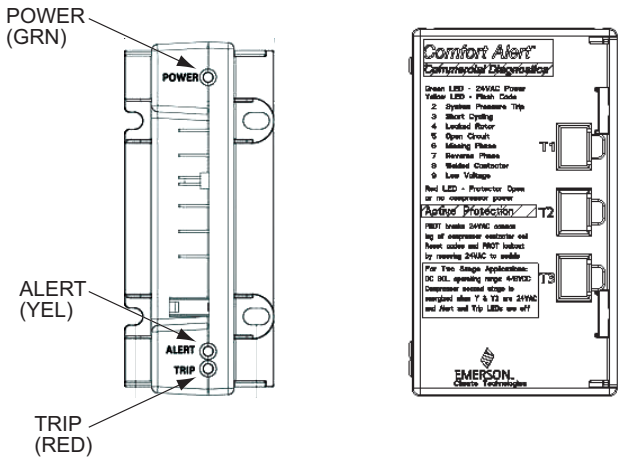

Fig. 26 — CADM Housing/LED Locations

The ALERT LED indicates an abnormal condition exists in the system through a flash code. The ALERT LED will blink a number of times consecutively, pause and the repeat the process. The number of blinks, defined in Table 13, correlates to a particular abnormal condition; troubleshooting tips are provided for each Alert code. Reset of the ALERT may be automatic or manual. If the fault condition causing the Alert is self-corrected, the Alert code will be removed and the CADM will automatically reset and allow the system to restart normally. Manual reset requires that main power to the 38AU unit be recycled after the cause for the Alert condition has been detected and corrected.

The TRIP LED indicates either a time-delay period is currently active (RED LED is blinking) or the module has locked out the compressor (RED LED is on steady). A lockout condition will occur when the CADM detects a thermostat demand at input Y but there is no power at the compressor line terminals T1 or T2 or T3. This lockout can occur due to a safety switch (LPS or HPS) opening and de-energizing the compressor contactor, the compressor-motor internal overload opens, or other internal power interruption has occurred. Reset of the TRIP LED requires that unit main power be recycled after the loss of power to the compressor condition has been detected and corrected.

Simultaneous Blinking of YELLOW and RED LEDs indicates control power input to the CADM is low. Check control circuit transformer and wiring.

Troubleshooting the CADM Wiring – Flashing LEDs also indicate wiring problems to the CADM. See Table 14 for discussion of additional LED flash codes and troubleshooting instructions.

Table 13 — LED Status Codes

Status LED	Status LED Description	Status LED Troubleshooting Information
Green “POWER”	Module has power	Supply voltage is present at module terminals
Red “TRIP” LED On Solid	Thermostat demand signal Y is present, but the compressor is not running.	1. Compressor protector is open 2. Condensing unit power disconnect is open 3. Compressor circuit breaker or fuse(s) is open 4. Broken supply wires or connector is not making contact 5. Compressor power wires not routed through Comfort Alert 6. Compressor contactor has failed open
Red “TRIP” LED Flashing	The anti-short cycle timer (3 minutes), in module is preventing compressor restart.	
Module locks out compressor when compressor damaging ALERT code appears. Lockout ALERT codes are noted in the Status LED Description. During a compressor lock out, 24VAC power must be removed from module to manually reset.		
Yellow “ALERT” LED On Solid	A short circuit or over current condition exists on PROT terminal.	1. Compressor contactor coil shorted 2. Electrical load too high for PROT circuit (maximum 1 Amp) 3. 24 V AC wired directly to PROT terminal
Yellow “ALERT” Flash Code 2	System Pressure Trip Discharge pressure out of limits or compressor overload (if no high pressure switch in system) LOCKOUT	1. High head pressure 2. Condenser coil poor air circulation (dirty, blocked, damaged) 3. Condenser fan is not running 4. If low pressure switch is open: Refer to Code 3 for troubleshooting
Yellow “ALERT” Flash Code 3	Short Cycling Compressor is running only briefly LOCKOUT	1. If low pressure switch is open: a. Low refrigerant charge b. Evaporator blower is not running c. Evaporator coil is frozen d. Faulty metering device e. Condenser coil is dirty f. Liquid line restriction (filter drier blocked if present) 2. If high pressure switch is open, go to Flash Code 2 information 3. Intermittent thermostat demand signal 4. System or control board defective
Yellow “ALERT” Flash Code 4	Locked Rotor LOCKOUT	1. Low line voltage to compressor 2. Excessive liquid refrigerant in compressor 3. Compressor bearings are seized
Yellow “ALERT” Flash Code 5	Open Circuit	1. Condensing unit power disconnect is open 2. Compressor circuit breaker or fuses are open 3. Compressor contactor has failed open 4. High pressure switch is open and requires manual reset 5. Broken supply wires or connector is not making contact 6. Unusually long compressor protector reset time due to extreme ambient temperature 7. Compressor windings are damaged
Yellow “ALERT” Flash Code 6	Missing Phase LOCKOUT	1. Compressor fuse is open on one phase 2. Broken wire or connector on one phase 3. Compressor motor winding is damaged 4. Utility supply has dropped one phase
Yellow “ALERT” Flash Code 7	Reverse Phase LOCKOUT	1. Compressor running backward due to supply phase reversal
Yellow “ALERT” Flash Code 8	Welded Contactor Compressor always runs	1. Compressor contactor has failed closed 2. Thermostat demand signal not connected to module
Yellow “ALERT” Flash Code 9	Low Voltage Control circuit < 18VAC	1. Control circuit transformer is overloaded 2. Low line voltage to compressor

Table 14 — CADM Troubleshooting

Miswired Module Indication	Recommended Troubleshooting Action
Green LED is not on, module does not power up	Determine if both R and C module terminals are connected. Verify voltage in present at module's R and C terminals. **NOTE:** The CADM requires a constant nominal 24VAC power supply. The wiring to the module's R and C terminals must be directly from the control transformer. The module cannot receive its power from another device that will interrupt the 24VAC power supply. See Fig. 23 and (38AUZ Wiring Diagram) and Fig. 24 (38AUD Wiring Diagram).
Green LED Intermittent, module powers up only when compressor runs	Determine if R and Y terminals are wired in reverse. Verify module's R and C terminals have a constant source. See "**NOTE**" above for details on R and C wiring.
TRIP LED is on but system and compressor check OK	Verify Y terminal is wired properly per the 38AU wiring diagram (see Figs. 23 and 24). Verify voltage at contactor coil falls below 0.5VAC when off. Verify 24VAQC is present across Y and C when thermostat demand signal is present. If not, R and C are reverse wired.
TRIP LED and ALERT LED flashing together	Verify R and C terminals are supplied with 19-28VAC.
ALERT Flash Code 3 (Compressor Short Cycling) displayed incorrectly	Verify Y terminal is connected to 24VAC at contactor coil. Verify voltage at contactor coil falls below 0.5VAC when off.
ALERT Flash Code 5 or 6 (Open Circuit, Missing Phase) displayed incorrectly	Check that compressor T1 and T3 wires are through module's current sensing holes. Verify Y terminal is connected to 24VAC at contactor coil. Verify voltage at contactor coil falls below 0.5VAC when off.
Alert Flash Code * (Welded Contactor) displayed incorrectly	Determine if module's Y terminal is connected. Verify Y terminal is connected to 24VAC at contactor coil. Verify 24VAC is present across Y and C when thermostat demand signal is present. If not, R and C are reverse wired. Verify voltage at contactor coil falls below 0.5VAC when off.

Crankcase Heater — The heater prevents refrigerant migration and compressor oil dilution during shutdown whenever compressor is not operating. The heater is wired to cycle with the compressor; the heater is off when compressor is running, and on when compressor is off.

The crankcase heater will operate as long as the power circuit is energized.

Compressor Protection

COMPRESSOR OVERTEMPERATURE PROTECTION (IP) — A thermostat installed on the compressor motor winding reacts to excessively high winding temperatures and shuts off the compressor.

CRANKCASE HEATER — The heater minimizes absorption of liquid refrigerant by oil in the crankcase during brief or extended shutdown periods. The main disconnect must be on to energize the crankcase heater.

> IMPORTANT: Never open any switch or disconnect that energizes the crankcase heater unless unit is being serviced or is to be shut down for a prolonged period. After a prolonged shutdown on a service job, energize the crankcase heater for 24 hours before starting the compressor.

ADVANCED SCROLL TEMPERATURE PROTECTION (ASTP) — See "Advanced Scroll Temperature Protection (ASTP)" on page 21.

Low-Pressure Switch — The 38AU low-pressure switch is stem-mounted on the suction line. Switches are all fixed, non-adjustable type.

High-Pressure Switch — The 38AU high-pressure switch is stem-mounted on the discharge line. The switch is a fixed, non-adjustable type.

Outdoor Fans — Each fan is supported by a formed-wire mount bolted to the fan deck and covered with a wire guard. Fan motors have permanently lubricated bearings.

Lubrication

FAN MOTORS have sealed bearings. No provisions are made for lubrication.

COMPRESSOR has its own oil supply. Loss of oil due to a leak in the system should be the only reason for adding oil after the system has been in operation.

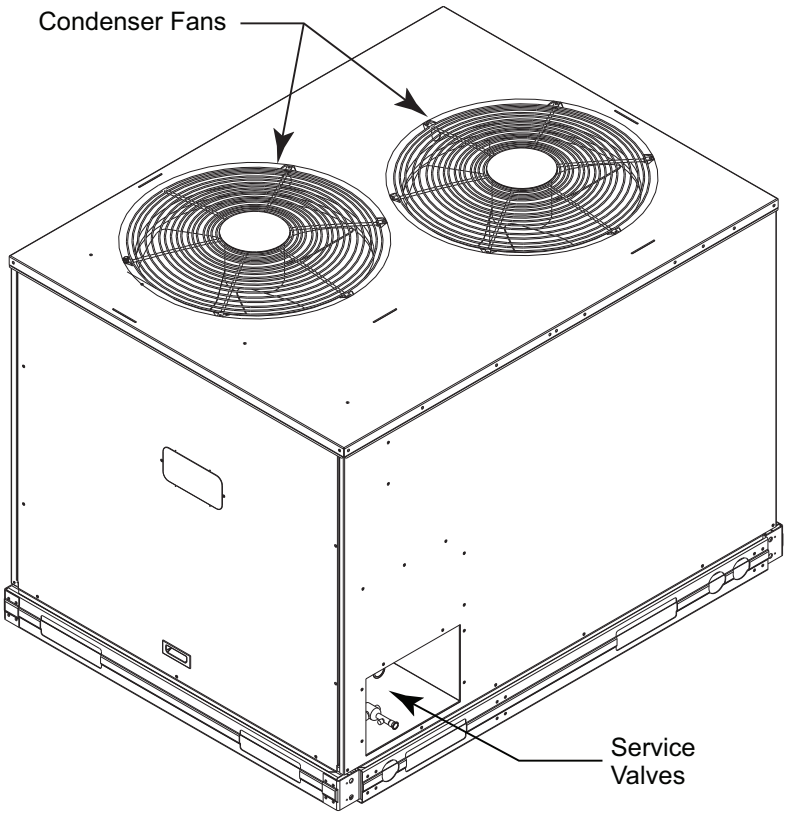

Fig. 27 — Typical Exterior, Single-Circuit Unit (38AUZ*08 shown)

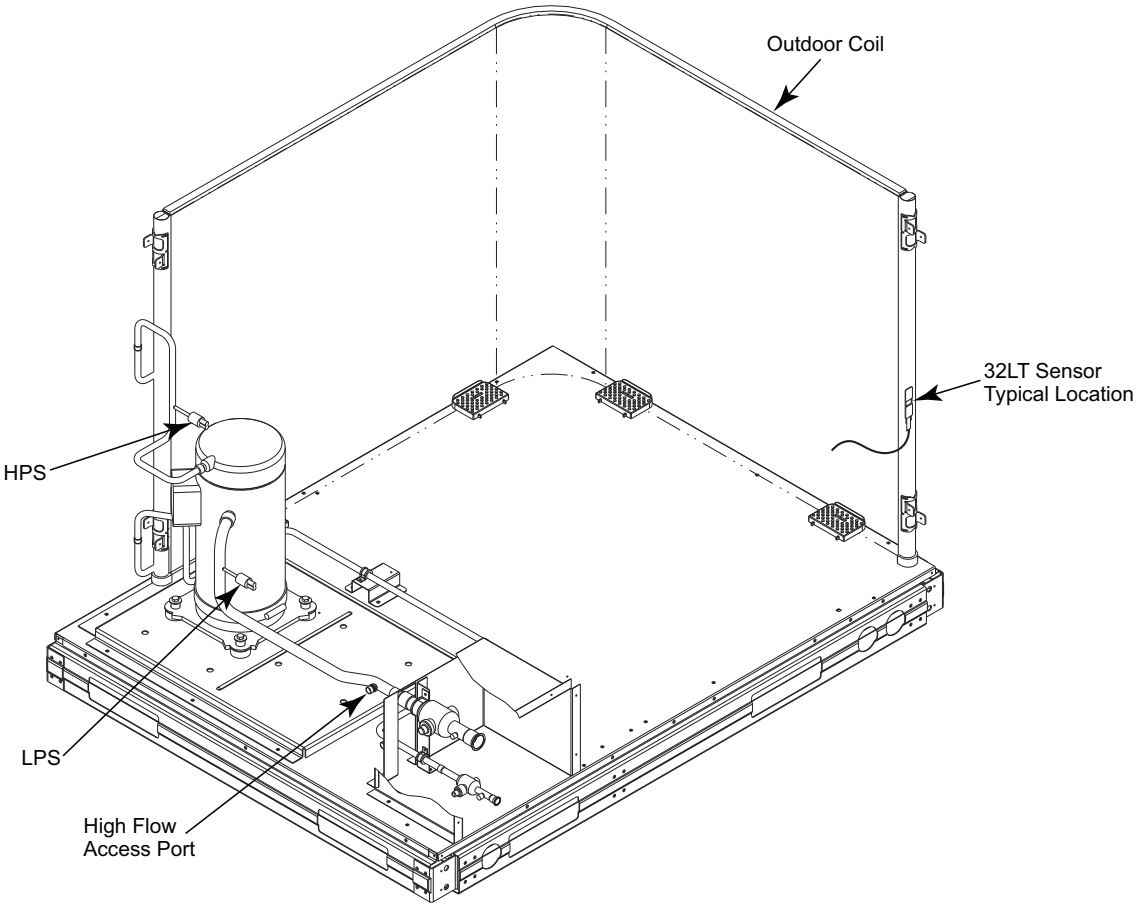

Fig. 28 — Typical Interior, Single-Circuit Unit (38AUZ*08 shown)

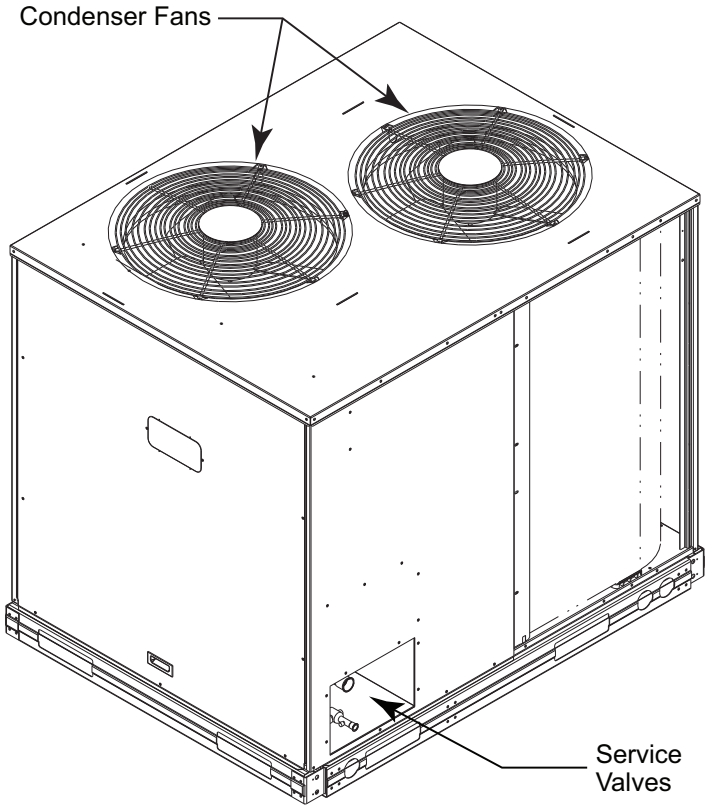

Fig. 29 — Typical Exterior, Two-Circuit Unit (38AUD*14 shown)

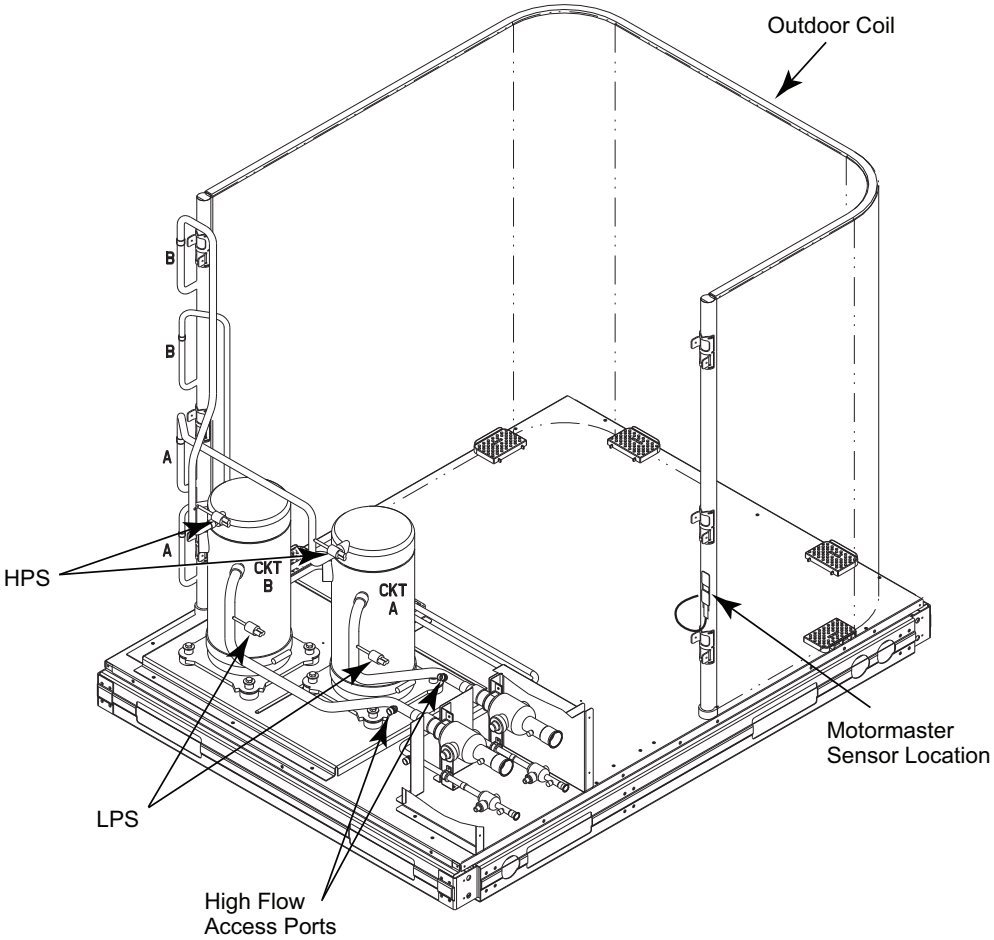

Fig. 30 — Typical Interior, Two-Circuit Unit (38AUD*14 shown)

NOVATION™ Coil Cleaning and Maintenance —

To clean the NOVATION condenser coil, chemicals are NOT to be used; only water is approved as the cleaning solution. Only clean potable water is authorized for cleaning NOVATION condensers.

Clean the coil as follows:

1. Turn off unit power.
2. Remove screws holding rear corner posts and top cover in place. Pivot top cover up 305 to 457 mm (12 to 18 in.) and support with a rigid support. See Fig. 31

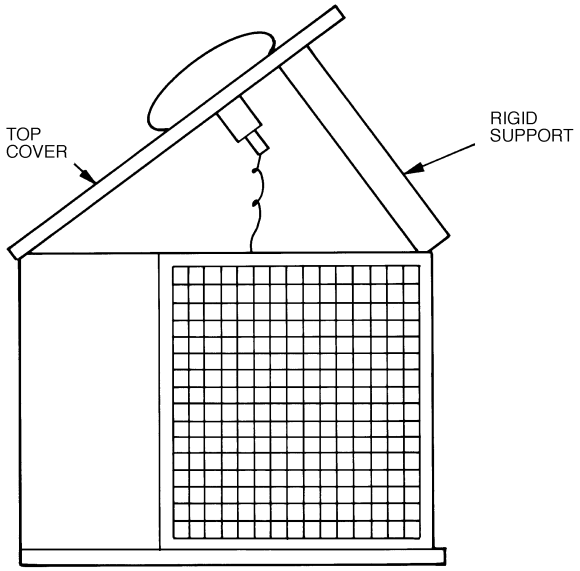

Fig. 31 — Pivot and Support Top Cover

3. Carefully remove any foreign objects or debris attached to the coil face or trapped within the mounting frame and brackets.
4. Using a high pressure water sprayer, purge any soap or industrial cleaners from hose and/or dilution tank prior to wetting the coil.Clean condenser face by spraying the coil core steadily and uniformly from top to bottom, directing the spray straight into or toward the coil face. Do not exceed 900 psig or a 45 degree angle; nozzle must be at least 30 cm (12 in.) from the coil face. Reduce pressure and use caution to prevent damage to air centers (fins). Do not fracture the braze between air centers and refrigerant tubes. Allow water to drain from the coil core and check for refrigerant leaks prior to start−up.
5. Replace top cover and rear corner posts.

⚠ CAUTION

EQUIPMENT DAMAGE HAZARD

Failure to follow this caution may result in damage to equipment.

Chemical cleaning should NOT be used on the aluminum microchannel (NOVATION) condenser. Damage to the coil may occur. Only approved cleaning is recommended.

Repairing NOVATION Condenser Tube Leaks

RCD offers service repair kit Part Number 50TJ660007 for repairing tube leaks in the NOVATION coil crosstubes. This kit includes approved braze materials (aluminum fluxcore braze rods), a heat shield, a stainless steel brush, replacement fin segments, adhesive for replacing fin segments, and instructions specific to the NOVATION aluminum coil. See EPIC for instruction sheet 99TA526379.

The repair procedure requires the use of MAPP gas and torch (must be supplied by servicer) instead of conventional oxyacetylene fuel and torch. While the flame temperature for MAPP is lower than that of oxyacetylene (and thus provides more flexibility when working on aluminum), the flame temperature is still higher than the melting temperature of aluminum, so user caution is required. Follow instructions carefully. Use the heat shield.

Replacing NOVATION Condenser Coil

The service replacement coil is preformed and is equipped with transition joints with copper stub tubes. When brazing the connection joints to the unit tubing, use a wet cloth around the aluminum tube at the transition joint. Avoid applying torch flame directly onto the aluminum tubing.

Service Parts

Listings of service parts for all units are available from the Replacement Components Division's Electronic Parts Information Catalog (EPIC). EPIC is available at Totaline stores, distributor and service office parts departments and on-line at HVACPartners.com.

When entering EPIC, the full unit model number is required. The model number includes the Design Revision reference value (see Fig. 2, Position 13). The unit model number is available from the unit's information data plate. (Do not use the "catalog number" when using EPIC. The "catalog number" suppresses the Design Revision value; failure to include Design Revision value may cause an incorrect unit parts list to be displayed.) When using EPIC, enter first four digits of the model number only. Find appropriate model from sales packages listed. Be sure to choose correct voltage and Design Revision.

EPIC is a product of RCD. To comment of the EPIC program, use the "Comment" button inside the EPIC program.

FASTENER TORQUE VALUES

Table 15 — Torque Values

Compressor mounting bolts	734–847 N–cm	(65–75 in–lbs)
Condenser fan motor mounting bolts	226 ±23 N–cm	(20 ±2 in–lbs)
Condenser fan hub setscrew	949 ±136 N–cm	(84 ±2 in–lbs)
High-flow service port	1085 ±23 N–cm	(96 ±10 in–lbs)
Schrader-type service check valve	23–34 N–cm	(2–3 in–lbs)

TROUBLESHOOTING

PROBLEM	SOLUTION
COMPRESSOR DOES NOT RUN	
Contactor Open	
1. Power off.	1. Restore power.
2. Fuses blown in field power circuit.	2. After finding cause and correcting, replace with correct size fuse.
3. No control power.	3. Check control transformer primary connections and circuit breaker.
4. Thermostat circuit open.	4. Check thermostat setting.
5. Safety device lockout circuit active.	5. Reset lockout circuit.
6. Low-pressure switch open.	6. Check for refrigerant undercharge, obstruction of indoor airflow. Make sure liquid line solenoid valve(s) is open.
7. High-pressure switch open.	7. Check for refrigerant overcharge, obstruction of outdoor airflow, air in system. Be sure outdoor fans are operating correctly.
8. Compressor overtemperature switch open.	8. Check for open condition. Allow for reset. Replace if defective.
9. Loose electrical connections.	9. Tighten all connections.
10. Compressor stuck.	10. See compressor service literature.
Contactor Closed	
1. Compressor leads loose.	1. Check connections.
2. Motor windings open.	2. See compressor service literature.
3. Single phasing.	3. Check for blown fuse. Check for loose connection at compressor terminal.
COMPRESSOR STOPS ON HIGH-PRESSURE SWITCH	
Outdoor Fan On	
1. High-pressure switch faulty.	1. Replace switch.
2. Reversed fan rotation.	2. Confirm rotation, correct if necessary.
3. Airflow restricted.	3. Remove obstruction.
4. Air recirculating.	4. Clear airflow area.
5. Noncondensables in system.	5. Recover refrigerant and recharge as required.
6. Refrigerant overcharge.	6. Recover refrigerant as required.
7. Line voltage incorrect.	7. Consult power company.
8. Refrigerant system restrictions.	8. Check or replace filter drier, expansion valve, etc.
Outdoor Fan Off	
1. Fan slips on shaft.	1. Tighten fan hub setscrews.
2. Motor not running.	2. Check power and capacitor.
3. Motor bearings stuck.	3. Replace bearings.
4. Motor overload open.	4. Check overload rating. Check for fan blade obstruction.
5. Motor burned out.	5. Replace motor.
COMPRESSOR CYCLES ON LOW-PRESSURE SWITCH	
Indoor-Air Fan Running	
1. Liquid line solenoid valve(s) fails to open.	1. Check liquid line solenoid valve(s) for proper operation. Replace if necessary.
2. Filter drier plugged.	2. Replace filter drier.
3. Expansion valve power head defective.	3. Replace power head.
4. Low refrigerant charge.	4. Add charge. Check low-pressure switch setting.
Airflow Restricted	
1. Coil iced up.	1. Check refrigerant charge.
2. Coil dirty.	2. Clean coil fins.
3. Air filters dirty.	3. Clean or replace filters.
4. Dampers closed.	4. Check damper operation and position.
Indoor-Air Fan Stopped	
1. Electrical connections loose.	1. Tighten all connections.
2. Fan relay defective.	2. Replace relay.
3. Motor overload open.	3. Power supply.
4. Motor defective.	4. Replace motor.
5. Fan belt broken or slipping.	5. Replace or tighten belt.

TROUBLESHOOTING (cont)

PROBLEM	SOLUTION
COMPRESSOR RUNNING BUT COOLING INSUFFICIENT	
Suction Pressure Low	
1. Refrigerant charge low.	1. Add refrigerant.
2. Head pressure low.	2. Check refrigerant charge. Check outdoor-air fan thermostat settings.
3. Air filters dirty.	3. Clean or replace filters.
4. Expansion valve power head defective.	4. Replace power head.
5. Indoor coil partially iced.	5. Check low-pressure setting.
6. Indoor airflow restricted.	6. Remove obstruction.
Suction Pressure High	
1. Unloaders not functioning	1. Check unloader adjustments. Check unloader setting.
2. Heat load excessive.	2. Check for open doors or windows in vicinity of fan coil.
UNIT OPERATES TOO LONG OR CONTINUOUSLY	
1. Low refrigerant charge.	1. Add refrigerant.
2. Control contacts fused.	2. Replace control.
3. Air in system.	3. Purge and evacuate system.
4. Partially plugged expansion valve or filter drier.	4. Clean or replace.
SYSTEM IS NOISY	
1. Piping vibration.	1. Support piping as required.
2. Compressor noisy.	2. Replace compressor if bearings are worn.
COMPRESSOR LOSES OIL	
1. Leak in system.	1. Repair leak.
2. Crankcase heaters not energized during shutdown.	2. Check wiring and relays. Check heater and replace if defective.
3. Improper interconnecting piping design.	3. Check piping for oil return. Replace if necessary.
FROSTED SUCTION LINE	
Expansion valve admitting excess refrigerant.	Adjust expansion valve.
HOT LIQUID LINE	
1. Shortage of refrigerant due to leak.	1. Repair leak and recharge.
2. Expansion valve opens too wide.	2. Adjust expansion valve.
FROSTED LIQUID LINE	
1. Restricted filter drier.	1. Remove restriction or replace.
2. Liquid line solenoid valve partially closed.	2. Replace valve.

APPENDIX A

AIR CONDITIONER AND HEAT PUMP WITH PURON® — QUICK REFERENCE GUIDE

- Puron® (R-410A) refrigerant operates at 50 percent to 70 percent higher pressures than R-22. Be sure that servicing equipment and replacement components are designed to operate with Puron®.
- Puron® refrigerant cylinders are rose colored.
- Recovery cylinder service pressure rating must be 400 psig, DOT 4BA400 or DOT BW400.
- Puron® systems should be charged with liquid refrigerant. Use a commercial type metering device in the manifold hose when charging into suction line with compressor operating.
- Manifold sets should be 700 psig high side and 180 psig low side with 550 psig low-side retard.
- Use hoses with 700 psig service pressure rating.
- Leak detectors should be designed to detect HFC refirgerant.
- Puron®, as with other HFCs, is only compatible with POE oils.
- Vacuum pumps will not remove moisture from oil.
- Use only factory specified liquid-line filter driers with rated working pressures greater than 600 psig.
- Do not install a suction-line filter drier in liquid-line.
- POE oils absorb moisture rapidly. Do not expose oil to atmosphere.
- POE oils may cause damage to certain plastics and roofing materials.
- Wrap all filter driers and service valves with wet cloth when brazing.
- A factory approved, liquid-line filter drier is required on every unit.
- Do not use an R-22 TXV.
- If indoor unit is equipped with a TXV, it must be changed to a Puron® TXV.
- Never open system to atmosphere while it is under a vacuum.
- When system must be opened for service, recover refrigerant, break vacuum with dry nitrogen before opening system.
- Always replace filter drier after opening system for service.
- Do not vent Puron® into the atmosphere.
- Do not use capillary tube coils.
- Observe all **warnings**, **cautions**, and **bold** text.
- All Puron® heat pumps must have indoor TXV.
- Do not leave Puron® suction line driers in place for more than 72 hours.

APPENDIX B

WIRING DIAGRAM LIST

38AU

Size	Electrical Characteristics	Diagram Number
Z*07	208/230-3-60	38AU500432
Z*08	208/230-3-60	38AU500432
D*12	208/230-3-60	38AU500563
D*14	208/230-3-60	38AU500563

APPENDIX C

MOTORMASTER SENSOR LOCATIONS

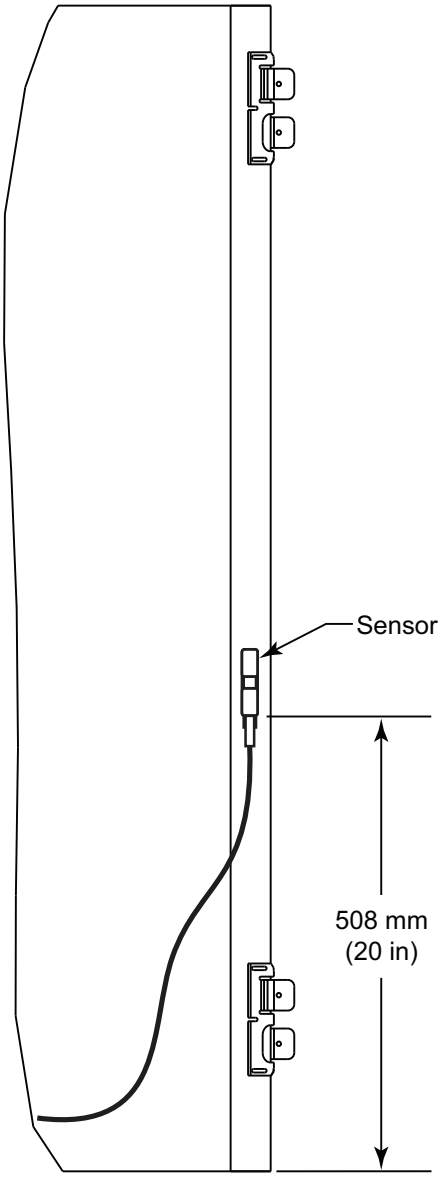

Fig. 32 — 38AUZ*07-08 Motormaster Sensor Locations

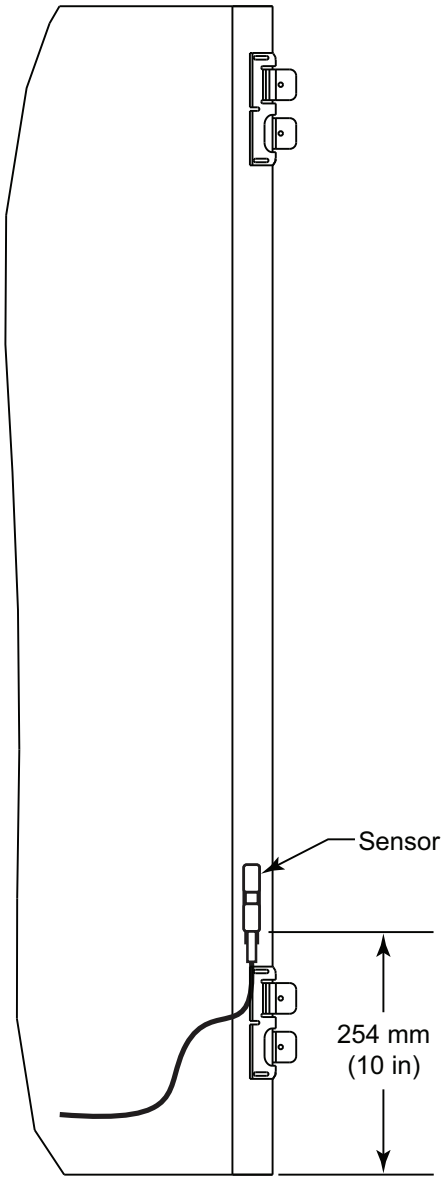

Fig. 33 — 38AUD*12-14 Motormaster Sensor Locations

Copyright 2009 Carrier Corp • 7310 W. Morris St. • Indianapolis, IN 46231 Printed in U.S.A. Edition Date:12/09 **Catalog No: 38AU-C01SI**

Manufacturer reserves the right to change, at any time, specifications and designs without notice and without obligations. Replaces: New

III. START UP
START-UP CHECKLIST

I. PRELIMINARY INFORMATION

OUTDOOR: MODEL NO. _____ SERIAL NO. _____

INDOOR: AIR HANDLER MANUFACTURER _____

MODEL NO. _____ SERIAL NO. _____

ADDITIONAL ACCESSORIES _____

II. PRE-START-UP

OUTDOOR UNIT

IS THERE ANY SHIPPING DAMAGE? _____ (Y/N) _____

IF SO, WHERE: _____

_____

WILL THIS DAMAGE PREVENT UNIT START-UP? (Y/N) _____

CHECK POWER SUPPLY. DOES IT AGREE WITH UNIT? (Y/N) _____

HAS THE GROUND WIRE BEEN CONNECTED? (Y/N) _____

HAS THE CIRCUIT PROTECTION BEEN SIZED AND INSTALLED PROPERLY? (Y/N) _____

ARE THE POWER WIRES TO THE UNIT SIZED AND INSTALLED PROPERLY? (Y/N) _____

CONTROLS

ARE THERMOSTAT AND INDOOR FAN CONTROL WIRING CONNECTIONS MADE AND CHECKED? (Y/N) _____

ARE ALL WIRING TERMINALS (including main power supply) TIGHT? (Y/N) _____

HAS CRANKCASE HEATER BEEN ENERGIZED FOR 24 HOURS? (Y/N) _____

INDOOR UNIT

HAS WATER BEEN PLACED IN DRAIN PAN TO CONFIRM PROPER DRAINAGE? (Y/N) _____

ARE PROPER AIR FILTERS IN PLACE? (Y/N) _____

HAVE FAN AND MOTOR PULLEYS BEEN CHECKED FOR PROPER ALIGNMENT? (Y/N) _____

DO THE FAN BELTS HAVE PROPER TENSION? (Y/N) _____

HAS CORRECT FAN ROTATION BEEN CONFIRMED? (Y/N) _____

PIPING

ARE LIQUID LINE SOLENOID VALVES LOCATED AT THE INDOOR COILS AS REQUIRED? (Y/N) _____

HAVE LEAK CHECKS BEEN MADE AT COMPRESSOR, OUTDOOR AND INDOOR COILS, TXVs (Thermostatic Expansion Valves), SOLENOID VALVES, FILTER DRIERS, AND FUSIBLE PLUGS WITH A LEAK DETECTOR? (Y/N) _____

LOCATE, REPAIR, AND REPORT ANY LEAKS. _____

HAVE LIQUID LINE SERVICE VALVES BEEN OPENED? (Y/N) _____

HAVE SUCTION SERVICE VALVES BEEN OPENED? (Y/N) _____

CHECK VOLTAGE IMBALANCE

LINE-TO-LINE VOLTS: AB _____ V AC _____ V BC _____ V

(AB + AC + BC)/3 = AVERAGE VOLTAGE = _____ V

MAXIMUM DEVIATION FROM AVERAGE VOLTAGE = _____ V

VOLTAGE IMBALANCE = 100 X (MAX DEVIATION)/(AVERAGE VOLTAGE) = _____

IF OVER 2% VOLTAGE IMBALANCE, DO NOT ATTEMPT TO START SYSTEM!
CALL LOCAL POWER COMPANY FOR ASSISTANCE.

CHECK INDOOR UNIT FAN SPEED AND RECORD. _____

CHECK OUTDOOR UNIT FAN SPEED AND RECORD. _____

AFTER AT LEAST 10 MINUTES RUNNING TIME, RECORD THE FOLLOWING MEASUREMENTS:

	Circuit A	Circuit B
SUCTION PRESSURE	_____	_____
SUCTION LINE TEMP	_____	_____
LIQUID PRESSURE	_____	_____
LIQUID LINE TEMP	_____	_____

ENTERING OUTDOOR UNIT AIR TEMP_____

LEAVING OUTDOOR UNIT AIR TEMP_____

INDOOR UNIT ENTERING-AIR DB (dry bulb) TEMP_____

INDOOR UNIT ENTERING-AIR WB (wet bulb) TEMP_____

INDOOR UNIT LEAVING-AIR DB TEMP_____

INDOOR UNIT LEAVING-AIR WB TEMP_____

COMPRESSOR AMPS (L1/L2/L3) (A/B) ____/____/____ ____/____/____

NOTES:

CUT ALONG DOTTED LINE

CUT ALONG DOTTED LINE

Copyright 2009 Carrier Corp • 7310 W. Morris St. • Indianapolis, IN 46231