45MBAAQ
Air Handler Unit Ductless System
Sizes 18K to 60K

SERVICE MANUAL

TABLE OF CONTENTS

PAGE

SAFETY CONSIDERATION 1
INTRODUCTION 1
PRECAUTIONS 3
INFORMATION SERVICING (FLAMMABLE MATERIALS) . . . 5
INDOOR UNIT SIZES 8
MODEL NUMBER NOMENCLATURE 8
AUXILIARY CONTACTS FOUND ON 24V BOARD 9
AUXILIARY CONTACTS FOUND ON THE MAIN BOARD . . . 10
ROTARY AND DIP SWITCHES 10
INDOOR UNIT WIRING 14
WIRING DIAGRAMS 16
24V SIGNAL CHART 20
REFRIGERANT LINES 20
TROUBLESHOOTING 21
GENERAL TROUBLESHOOTING 22
QUICK MAINTENANCE BY ERROR CODE 23
TROUBLESHOOTING BY ERROR CODE 25
DISASSEMBLY INSTRUCTIONS 44
APPENDIX 54

SAFETY CONSIDERATION

Installing, starting up, and servicing air-conditioning equipment can be hazardous due to system pressures, electrical components, and equipment location (roofs, elevated structures, etc.). Only trained, qualified installers and service mechanics should install, start-up, and service this equipment.

Untrained personnel can perform basic maintenance functions such as coil cleaning. All other operations should be performed by trained service personnel.

When working on the equipment, observe precautions in the product literature and on tags, stickers, and labels attached to the equipment.

Follow all safety codes. Wear safety glasses and work gloves. Keep a quenching cloth and fire extinguisher nearby when brazing. Use care in handling, rigging, and setting bulky equipment.

Read this manual thoroughly and follow all warnings or cautions included in the literature and attached to the unit. Consult local building codes and National Electrical Code (NEC) for special requirements. Recognize safety information. This is the safety-alert symbol ⚠. When you see this symbol on the unit and in instructions or manuals, be alert to the potential for personal injury.

Understand these signal words: **DANGER**, **WARNING**, and **CAUTION**. These words are used with the safety-alert symbol. **DANGER** identifies the most serious hazards which **will** result in severe personal injury or death. **WARNING** signifies hazards which **could** result in personal injury or death. **CAUTION** is used to identify unsafe practices which **may** result in minor personal injury or product and property damage. **NOTE** is used to highlight suggestions which **will** result in enhanced installation, reliability, or operation.

⚠ WARNING

ELECTRICAL SHOCK HAZARD
Failure to follow this warning could result in personal injury or death.

Before installing, modifying, or servicing system, main electrical disconnect switch must be in the **OFF** position. There may be more than 1 disconnect switch. Lock out and tag switch with a suitable warning label.

⚠ WARNING

EXPLOSION HAZARD
Failure to follow this warning could result in death, serious personal injury, and/or property damage. Never use air or gases containing oxygen for leak testing or operating refrigerant compressors. Pressurized mixtures of air or gases containing oxygen can lead to an explosion.

⚠ CAUTION

EQUIPMENT DAMAGE HAZARD
Failure to follow this caution may result in equipment damage or improper operation.Do not bury more than 36 in. (914 mm) of refrigerant pipe in the ground. If any section of pipe is buried, there must be a 6 in. (152 mm) vertical rise to the valve connections on the outdoor units.

If more than the recommended length is buried, refrigerant may migrate to the cooler buried section during extended periods of system shutdown. This causes refrigerant slugging and could possibly damage the compressor at start-up.

INTRODUCTION

This service manual provides the necessary information to service, repair, and maintain the family of heat pumps. This manual has an "APPENDIX" on page 54 with data required to perform troubleshooting. Use the "TABLE OF CONTENTS" on page 1 to locate a desired topic.

⚠ WARNING

This appliance is not intended for use by persons (including children) with reduced physical, sensory or mental capabilities, or lack of experience and knowledge, unless they have been given supervision or instruction concerning use of the appliance by a person responsible for their safety. Children should be supervised to ensure that they do not play with the appliance.

⚠ WARNING

Only use the specified wire. If the wire is damaged, it must be replaced by the manufacturer, its service agent or similarly qualified persons in order to avoid a hazard. The product must be properly grounded at the time of installation, or electric shock may occur.

For all electrical work, follow all local and national wiring standards, regulations, and the Installation Manual. Connect the cables tightly, and clamp them securely to prevent external forces from damaging the terminal. Improper electrical connections can overheat and cause fire, and may also cause shock. All electrical connections must be made according to the Electrical Connection Diagram located on the panels of the indoor and outdoor units.

All wiring must be properly arranged to ensure that the control board cover can close properly. If the control board cover is not closed properly, it can lead to corrosion and cause the connection points on the terminal to heat up, catch fire, or cause electrical shock.

Disconnection must be incorporated in the fixed wiring in accordance with NEC, CSA, and Local Codes. Do not share the electrical outlet with other appliances. Improper or insufficient power supply can cause fire or electric shock.

If connecting power to fixed wiring, an all-pole disconnection device which has at least 3mm clearances in all poles, and have a leakage current that may exceed 10mA, the residual current device (RCD) having a rated residual operating current not exceeding 30mA, and disconnection must be incorporated in the fixed wiring in accordance with NEC, CSA, and Local Codes.

⚠ WARNING

Turn of the unit and disconnect the power before performing any installation or repairing. Failure to do so can cause electric shock.

Installation must be performed by an authorized dealer or specialist. Defective installation can cause water leakage, electrical shock, or fire. Installation must be performed according to the installation instructions.

Improper installation can cause water leakage, electrical shock, or fire. Contact an authorized service technician for repair or maintenance of this unit. This appliance shall be installed in accordance with national wiring regulations.

Only use the included accessories, parts, and specified parts for installation. Using non-standard parts can cause water leakage, electrical shock, fire, and can cause the unit to fail.

Install the unit in a firm location that can support the unit's weight. If the chosen location cannot support the unit's weight, or the installation is not done properly, the unit may drop and cause serious injury and damage. Install drainage piping according to the instructions in this manual. Improper drainage may cause water damage to your home and property.

For units that have an auxiliary electric heater, do not install the unit within 3 feet (1 meter) of any combustible materials.

If combustible gas accumulates around the unit, it may cause fire.

Do not turn on the power until all work has been completed.

When moving or relocating the unit, consult experienced service technicians for disconnection and re-installation of the unit.

How to install the appliance to its support, please read the information for details in "Indoor Unit Installation" and "Outdoor Unit Installation" sections.

NOTE: The air conditioner's circuit board (PCB) is designed with a fuse to provide overcurrent protection. The specifications of the fuse are printed on the circuit board, for example: T3.15AL/250VAC, T5AL/250VAC, T3.15A/250VAC, T5A/ 250VAC, T20A/250VAC, T30A/250VAC,etc.

NOTE: Only the blast-proof ceramic fuse can be used.

⚠ WARNING

FOR FLAMMABLE REFRIGERANTS

Do not use means to accelerate the defrosting process or to clean, other than those recommended by the manufacturer.

The appliance shall be stored in a room without continuously operating ignition sources (for example: open flames, an operating gas appliance or an operating electric heater).

Do not pierce or burn. Be aware that refrigerants may not contain an odor.

⚠ WARNING

PERSONAL INJURY AND PROPERTY DAMAGE HAZARD

For continued performance, reliability, and safety, the only approved accessories and replacement parts are those specified by the equipment manufacturer. The use of non-manufacturer approved parts and accessories could invalidate the equipment limited warranty and result in fire risk, equipment malfunction, and failure. Review the manufacturer's instructions and replacement parts catalogs available from your equipment supplier.

WARNING - RISK OF FIRE DUE TO FLAMMABLE REFRIGERANT USED. FOLLOW HANDLING INSTRUCTIONS CAREFULLY IN COMPLIANCE WITH NATIONAL REGULATIONS.

R-454B

Refrigerant Safety Group **A2L**

R-454B

NOTE: Risk of Fire. Flammable refrigerant used. To be repaired only by trained service personnel. Do not puncture refrigerant tubing.

PRECAUTIONS

To prevent personal injury, or property or unit damage, adhere to all precautionary measures and instructions outlined in this manual. Before servicing a unit, refer to this service manual and its relevant sections.

Failure to adhere to all precautionary measures listed in this section may result in personal injury, damage to the unit or to property, or in extreme cases, death.

IN CASE OF ACCIDENT OR EMERGENCY

⚠ WARNING

- If a gas leak is suspected, immediately turn off the gas and ventilate the area if a gas leak is suspected before turning the unit on.
- If strange sounds or smoke is detected from the unit, turn the breaker off and disconnect the power supply cable.
- If the unit comes into contact with liquid, contact an authorized service center.
- If liquid from the batteries makes contact with skin or clothing, immediately rinse or wash the area well with clean water.
- Do not insert hands or other objects into the air inlet or outlet while the unit is plugged in.
- Do not operate the unit with wet hands.

⚠ CAUTION

- Clean and ventilate the unit at regular intervals when operating it near a stove or near similar devices.
- Do not use the unit during severe weather conditions. If possible, remove the product from the window before such occurrences.

PRE-INSTALLATION AND INSTALLATION

⚠ WARNING

- Use this unit only on a dedicated circuit.
- Damage to the installation area could cause the unit to fall, potentially resulting in personal injury, property damage, or product failure.
- Only qualified personnel should disassemble, install, remove, or repair the unit.
- Only a qualified electrician should perform electrical work. For more information, contact your dealer, seller, or an authorized service center.

⚠ CAUTION

While unpacking be careful of sharp edges around the unit as well as the edges of the fins on the con-denser and evaporator.

OPERATION AND MAINTENANCE

⚠ WARNING

- Do not use defective or under-rated circuit breakers.
- Ensure the unit is properly grounded and that a dedicated circuit and breaker are installed.
- Do not modify or extend the power cable. Ensure the power cable is secure and not damaged during operation.
- Do not unplug the power supply plug during operation.
- Do not store or use flammable materials near the unit.
- Do not open the inlet grill of the unit during operation.
- Do not touch the electrostatic filter if the unit is equipped with one.
- Do not block the inlet or outlet of air flow to the unit.
- Do not use harsh detergents, solvents, or similar items to clean the unit. Use a soft cloth for cleaning.
- Do not touch the metal parts of the unit when removing the air filter as they are very sharp.
- Do not step on or place anything on the unit or outdoor units.
- Do not drink water drained from the unit
- Avoid direct skin contact with water drained from the unit.
- Use a firm stool or step ladder according to manufacturer procedures when cleaning or maintaining the unit.

⚠ CAUTION

- Do not install or operate the unit for an extended period of time in areas of high humidity or in an environment directly exposing it to sea wind or salt spray.
- Do not install the unit on a defective or damaged installation stand, or in an unsecure location.
- Ensure the unit is installed at a level position
- Do not install the unit where noise or air discharge created by the outdoor unit will negatively impact the environment or nearby residences.
- Do not expose skin directly to the air discharged by the unit for prolonged periods of time.
- Ensure the unit operates in areas water or other liquids.
- Ensure the drain hose is installed correctly to ensure proper water drainage.
- When lifting or transporting the unit, it is recommended that two or more people are used for this task.
- When the unit is not to be used for an extended time, disconnect the power supply or turn off the breaker.

WARNING FOR USING FLAMMABLE REFRIGERANT

1. Installation (Space)
   – That the installation of pipe-work shall be kept to a minimum.
   – That pipe-work shall be protected from physical damage.
   – Where refrigerant pipes shall be compliance with national gas regulations.
   – That mechanical connections shall be accessible for maintenance purposes.
   – In cases that require mechanical ventilation, ventilation openings shall be kept clear of obstruction.
   – When disposing of the product is used, be based on national regulations, properly processed.
2. Servicing

   Any person who is involved with working on or breaking into a refrigerant circuit should hold a current valid certificate from an industry-accredited assessment authority, which authorizes their competence to handle refrigerants safely in accordance with an industry recognized assessment specification.
3. Maintenance and repair requiring the assistance of other skilled personnel shall be carried out under the supervision of the person competent in the use of flammable refrigerants.
4. Do not use means to accelerate the defrosting process or to clean, other than those recommended by the manufacturer.
5. The appliance shall be stored in a room without continuously operating ignition sources (for example: open flames, an operating gas appliance or an operating electric heater).
6. Be more careful that foreign matter (oil, water, etc.) does not enter the piping. Also, when storing the piping, securely seal the opening by pinching, taping, etc.
7. Do not pierce or burn.
8. Be aware that refrigerants may not contain an oder.
9. All working procedure that affects safety means shall only be carried by competent persons.
10. Appliance shall be stored in a well -ventilated area where the room size corresponds to the room area as specific for operation.
11. The appliance shall be stored so as to prevent mechanical damage from occurring.
12. Joints shall be tested with detection equipment with a capability of 5 g/year of refrigerant or better, with the equipment in standstill and under operation or under a pressure of at least these standstill or operation conditions after installation. Detachable joints shall NOT be used in the indoor side of the unit (brazed, welded joint could be used).
13. When a FLAMMABLE REFRIGERANT is used, the requirements for installation space of appliance and /or ventilation requirements are determined according to
    – the mass charge amount (M) used in the appliance,
    – the installation location,
    – the type of ventilation of the location or of the appliance.
    – piping material, pipe routing, and installation shall include protection from physical damage in operation and service, and be in compliance with national and local codes and standards, such as ASHRAE 15, IAPMO Uniform Mechanical Code, ICC International Mechanical Code, or CSA B52. All field joints shall be accessible for inspection prior to being covered or enclosed.
    – that protection devices, piping, and fittings shall be protected as far as possible against adverse environmental effects, for ex-ample, the danger of water collecting and freezing in relief pipes or the accumulation of dirt and debris;

- that piping in refrigeration systems shall be so designed and installed to minimize the likelihood of hydraulic shock damaging the system;
- that steel pipes and components shall be protected against corrosion with a rustproof coating before applying any insulation;
- that precautions shall be taken to avoid excessive vibration or pulsation;
- the minimum floor area of the room shall be mentioned in the form of a table or a single figure without reference to a formula;
- after completion of field piping for split systems, the field pipe-work shall be pressure tested with an inert gas and then vacuum tested prior to refrigerant charging, according to the following requirements:
  - The minimum test pressure for the low side of the system shall be the low side design pressure and the minimum test pressure for the high side of the system shall be the high side design pressure, unless the high side of the system, cannot be isolated from the low side of the system in which case the entire system shall be pressure tested to the low side design pressure.
  - The test pressure after removal of pressure source shall be maintained for at least 1h with no decrease of pressure indicated by the test gauge, with test gauge resolution not exceeding 5% of the test pressure.
  - During the evacuation test, after achieving a vacuum level specified in the manual or less, the refrigeration system shall be isolated from the vacuum pump and the pressure shall not rise above 1500 microns within 10 min. The vacuum pressure level shall be specified in the manual, and shall be the lessor of 500 microns or the value required for compliance with national and local codes and standards, which may vary between residential, commercial, and industrial buildings.
- field-made refrigerant joints indoors shall be tightness tested according to the following requirements: The test method shall have a sensitivity of 5 grams per year of refrigerant or better under a pressure of at least 0,25 times the maximum allowable pressure. No leak shall be detected.
- correct the minimum room area of the space Amin by multipling by the altitude adjustment factor (AF) factor in the below table based on for building site ground level altitude (Halt) in meters.

Table 1 — Altitude Adjustment Factor

Halt	0	200	400	600	800	1000	1200	1400	1600
AF	1.00	1.00	1.00	1.00	1.02	1.05	1.07	1.10	1.12
Halt	1800	2000	2200	2400	2600	2800	3000	3200	
AF	1.15	1.18	1.21	1.25	1.28	1.32	1.36	1.40	

- Warning: keep any required ventilation openings clear of obstruction;
- Any servicing shall be performed only as recommended by the manufacturer

14. Qualification of workers

Any maintenance, service and repair operations must be required qualification of the working personnel. Every working procedure that affects safety means shall only be carried out by competent persons that joined the training and achieved competence should be documented by a certificate. The training of these procedures is carried out by national training organizations or manufacturers that are accredited to teach the relevant national competency standards that may be set in legislation. All training shall follow the ANNEX HH requirements of UL 60335-2-40 4rd Edition.

Examples for such working procedures are:

- breaking into the refrigerating circuit
- opening of sealed components
- opening of ventilated enclosures

INFORMATION SERVICING (FLAMMABLE MATERIALS)

CHECKS TO THE AREA

Prior to beginning work on systems containing flammable refrigerants, safety checks are necessary to ensure that the risk of ignition is minimized. For repair to the refrigerating system, the following precautions shall be complied with prior to conducting work on the system.

WORK PROCEDURE

Work shall be undertaken under a controlled procedure so as to minimize the risk of a flammable gas or vapor being present while the work is being performed.

GENERAL WORK AREA

All maintenance staff and others working in the local area shall be instructed on the nature of work being carried out. Work in confined spaces shall be avoided.

CHECKING FOR PRESENCE OF REFRIGERANT

- The area shall be checked with an appropriate refrigerant detector prior to and during work, to ensure the technician is aware of potentially flammable atmospheres.
- Ensure that the leak detection equipment being used is suitable for use with flammable refrigerants, i.e. no sparking, adequately sealed or intrinsically safe.

PRESENCE OF FIRE EXTINGUISHER

If any hot work is to be conducted on the refrigeration equipment or any associated parts, appropriate fire extinguishing equipment shall be available to hand. Have a dry powder or CO2 fire extinguisher adjacent to the charging area.

NO IGNITION SOURCE

- No person carrying out work in relation to a refrigeration system which involves exposing any pipe work that contains or has contained flammable refrigerant shall use any sources of ignition in such a manner that it may lead to the risk of fire or explosion.
- All possible ignition sources, including cigarette smoking, should be kept sufficiently far away from the site of installation, repairing, removing and disposal, during which flammable refrigerant can possibly be released to the surrounding space.
- Prior to work taking place, the area around the equipment is to be surveyed to make sure that there are no flammable hazards or ignition risks.
- NO SMOKING signs shall be displayed.

VENTILATED AREA

Ensure that the area is in the open or that it is adequately ventilated before breaking into the system or conducting any hot work. A degree of ventilation shall continue during the period that the work is carried out. The ventilation should safely disperse any released refrigerant and preferably expel it externally into the atmosphere.

CHECKS TO THE REFRIGERANT EQUIPMENT

Where electrical components are being changed, they shall be fit for the purpose and to the correct specification. At all times the manufacturer's maintenance and service guidelines shall be followed. If in doubt consult the manufacturer's technical department for assistance. The following checks shall be applied to installations using FLAMMABLE REFRIGERANTS:

- the actual refrigerant charge is in accordance with the room size within which the refrigerant containing parts are installed;
- the ventilation machinery and outlets are operating adequately and are not obstructed;
- if an indirect refrigerating circuit is being used, the secondary circuits shall be checked for the presence of refrigerant;

– marking to the equipment continues to be visible and legible, marking and signs that are illegible shall be corrected;
– refrigeration pipe or components are installed in a position where they are unlikely to be exposed to any substance which may corrode refrigerant containing components, unless the components are constructed of materials which are inherently resistant to being corroded or are suitably protected against being so corroded.

CHECK TO ELECTRICAL DEVICES

Repair and maintenance to electrical components shall include initial safety checks and component inspection procedures. If a fault exists that could compromise safety, then no electrical supply shall be connected to the circuit until it is satisfactorily dealt with. If the fault cannot be corrected immediately but it is necessary to continue operation, an adequate temporary solution shall be used. This shall be reported to the owner of the equipment so all parties are advised. Initial safety checks shall include:

– that capacitors are discharged: this shall be done in a safe manner to avoid possibility of sparking;
– that there no live electrical components and wiring are exposed while charging, recovering or purging the system;
– that there is continuity of earth bonding.

SEALED ELECTRICAL COMPONENTS SHALL BE REPLACED

- During repairs to sealed components, all electrical supplies shall be disconnected from the equipment being worked upon prior to any removal of sealed covers, etc.

  If it is absolutely necessary to have an electrical supply to equipment during servicing, then a permanently operating form of leak detection shall be located at the most critical point to warn of a potentially hazardous situation.
- Particular attention shall be paid to the following to ensure that by working on electrical components, the casing is not altered in such a way that the level of protection is affected. This shall include damage to cables, excessive number of connections, terminals not made to original specification, damage to seals, incorrect fitting of glands, etc.
  – Ensure that apparatus is mounted securely.
  – Ensure that seals or sealing materials have not degraded such that they no longer serve the purpose of preventing the ingress of flammable atmospheres. Replacement parts shall be in accordance with the manufacturer's specifications.

INTRISICALLY SAFE COMPONENTS MUST BE REPLACED

Do not apply any permanent inductive or capacitance loads to the circuit without ensuring that this will not exceed the permissible voltage and current permitted for the equipment in use. Intrinsically safe components are the only types that can be worked on while live in the presence of a flammable atmosphere. The test apparatus shall be at the correct rating. Replace components only with parts specified by the manufacturer. Other parts may result in the ignition of refrigerant in the atmosphere from a leak.

NOTE: The use of silicon sealant may inhibit the effectiveness of some types of leak detection equipment. Intrinsically safe components do not have to be isolated prior to working on them.

CABLING

Check that cabling will not be subject to wear, corrosion, excessive pressure, vibration, sharp edges or any other adverse environmental effects. The check shall also take into account the effects of aging or continual vibration from sources such as compressors or fans.

DETECTION OF FLAMMABLE REFRIGERANTS

– Under no circumstances shall potential sources of ignition be used in the searching for or detection of refrigerant leaks. A halide torch (or any other detector using a naked flame) shall not be used.
– The following leak detection methods are deemed acceptable for refrigerant systems. Electronic leak detectors may be used to detect refrigerant leaks but, in the case of FLAMMABLE REFRIGERANTS, the sensitivity may not be adequate, or may need re-calibration. (Detection equipment shall be calibrated in a refrigerant-free area.) Ensure that the detector is not a potential source of ignition and is suitable for the refrigerant used. Leak detection equipment shall be set at a percentage of the LFL of the refrigerant and shall be calibrated to the refrigerant employed, and the appropriate percentage of gas (25 % maximum) is confirmed. Leak detection fluids are also suitable for use with most refrigerants but the use of detergents containing chlorine shall be avoided as the chlorine may react with the refrigerant and corrode the copper pipe-work.

NOTE Examples of leak detection fluids are:

- **bubble method,**
- **fluorescent method agents.**
  – If a leak is suspected, all naked flames shall be removed/extinguished.
  – If a leakage of refrigerant is found which requires brazing, all of the refrigerant shall be recovered from the system, or isolated (by means of shut of valves) in a part of the system remote from the leak. See the following instructions of removal of refrigerant.

REMOVAL AND EVACUATION

- When breaking into the refrigerant circuit to make repairs or for any other purpose, conventional procedures shall be used. However, it is important that best practice is followed since flammability is a consideration.
- The following procedure shall be adhered to:
  – safely remove refrigerant following local and national regulations;
  – evacuate;
  – purge the circuit with inert gas (optional for A2L);
  – evacuate (optional for A2L);
  – continuously flush or purge with inert gas when using flame to open circuit; and open the circuit;
- The refrigerant charge shall be recovered into the correct recovery cylinders if venting is not allowed by local and national codes. For appliances containing flammable refrigerants, the system shall be purged with oxygen-free nitrogen to render the appliance safe for flammable refrigerants. This process might need to be repeated several times. Compressed air or oxygen shall not be used for purging refrigerant systems.
- For appliances containing flammable refrigerants, refrigerants purging shall be achieved by breaking the vacuum in the system with oxygen-free nitrogen and continuing to fill until the working pressure is achieved, then venting to atmosphere, and finally pulling down to a vacuum (optional for A2L). This process shall be repeated until no refrigerant is within the system (optional for A2L). When the final oxygen-free nitrogen charge is used, the system shall be vented down to atmospheric pressure to enable work to take place.
- The outlet for the vacuum pump shall not be close to any potential ignition sources, and ventilation shall be available.

CHARGING PROCEDURES

In addition to conventional charging procedures, the following requirements shall be followed:

- Works shall be undertaken with appropriate tools only (In case of uncertainty, please consult the manufacturer of the tools for use with flammable refrigerants)
- Ensure that contamination of different refrigerants does not occur when using charging equipment. Hoses or lines shall be as short as possible to minimize the amount of refrigerant contained in them.
- Cylinders shall be kept upright.
- Ensure that the refrigeration system is earthed prior to charging the system with refrigerant.
- Label the system when charging is complete (if not already). Extreme care shall be taken not to overfill the refrigeration system.
- Prior to recharging the system it shall be pressure tested with OFN. The system shall be leak tested on completion of charging but prior to commissioning. A follow up leak test shall be carried out prior to leaving the site.

DECOMMISSIONING

Before carrying out this procedure, it is essential that the technician is completely familiar with the equipment and all its detail. It is recommended good practice that all refrigerants are recovered safely. Prior to the task being carried out, an oil and refrigerant sample shall be taken in case analysis is required prior to re-use of recovered refrigerant. It is essential that electrical power is available before the task is commenced.

- Become familiar with the equipment and its operation.
- Isolate system electrically.
- Before attempting the procedure ensure that:
  - mechanical handling equipment is available, if required, for handling refrigerant cylinders;
  - all personal protective equipment is available and being used correctly;
  - the recovery process is supervised at all times by a competent person;
  - recovery equipment and cylinders conform to the appropriate standards.
- Pump down refrigerant system, if possible.
- If a vacuum is not possible, make a manifold so that refrigerant can be removed from various parts of the system.
- Make sure that cylinder is situated on the scales before recovery takes place.
- Start the recovery machine and operate in accordance with manufacturer's instructions.
- Do not overfill cylinders. (No more than 80% volume liquid charge).
- Do not exceed the maximum working pressure of the cylinder, even temporarily.
- When the cylinders have been filled correctly and the process completed, make sure that the cylinders and the equipment are removed from site promptly and all isolation valves on the equipment are closed off.
- Recovered refrigerant shall not be charged into another refrigeration system unless it has been cleaned and checked.

LABELING

Equipment shall be labeled stating that it has been de-commissioned and emptied of refrigerant. The label shall be dated and signed. For appliances containing FLAMMABLE REFRIGERANTS, ensure that there are labels on the equipment stating the equipment contains FLAMMABLE REFRIGERANT.

RECOVERY

- When removing refrigerant from a system, either for servicing or decommissioning,
- it is recommended good practice that all refrigerants are removed safely.
- When transferring refrigerant into cylinders, ensure that only appropriate refrigerant recovery cylinders are employed. Ensure that the correct number of cylinders for holding the total system charge is available. All cylinders to be used are designated for the recovered refrigerant and labeled for that refrigerant (i.e. special cylinders for the recovery of refrigerant). Cylinders shall be complete with pressure-relief valve and associated shut-of valves in good working order. Empty recovery cylinders are evacuated and, if possible, cooled before recovery occurs.
- The recovery equipment shall be in good working order with a set of instructions concerning the equipment that is at hand and shall be suitable for the recovery of the flammable refrigerant. If in doubt the manufacturer should be consulted. In addition, a set of calibrated weighing scales shall be available and in good working order. Hoses shall be complete with leak-free disconnect couplings and in good condition.
- The recovered refrigerant shall be processed according to local legislation in the correct recovery cylinder, and the relevant waste transfer note arranged. Do not mix refrigerants in recovery units and especially not in cylinders.
- If compressors or compressor oils are to be removed, ensure that they have been evacuated to an acceptable level to make certain that flammable refrigerant does not remain within the lubricant. The compressor body shall not be heated by an open flame or other ignition sources to accelerate this process. When oil is drained from a system, it shall be carried out safely.

TRANSPORTATION, MARKING AND STORAGE FOR UNITS

1. Transport of equipment containing flammable refrigerants
   Compliance with the transport regulations
2. Marking of equipment using signs
   Compliance with local regulations
3. Disposal of equipment using flammable refrigerants
   Compliance with national regulations
4. Storage of equipment/appliances
   The storage of equipment should be in accordance with the manufacturer's instructions.
5. Storage of packed (unsold) equipment
   Storage package protection should be constructed such that mechanical damage to the equipment inside the package will not cause a leak of the refrigerant charge. The maximum number of pieces of equipment permitted to be stored together will be determined by local regulations.

Manufacturer reserves the right to change, at any time, specifications and designs without notice and without obligations.

INDOOR UNIT SIZES

Type	Capacity (Btu/h)	Voltage	Indoor units
Residential	18K	208/230V, 1 phase, 60Hz	45MBAAQ18XB3
Residential	24K		45MBAAQ24XB3
Residential	30K		45MBAAQ30XB3
Residential	36K		45MBAAQ36XB3
Light Commercial	36K		45MBAAQ36XA3
Light Commercial	48K		45MBAAQ48XA3
Light Commercial	60K		45MBAAQ60XA3

MODEL NUMBER NOMENCLATURE

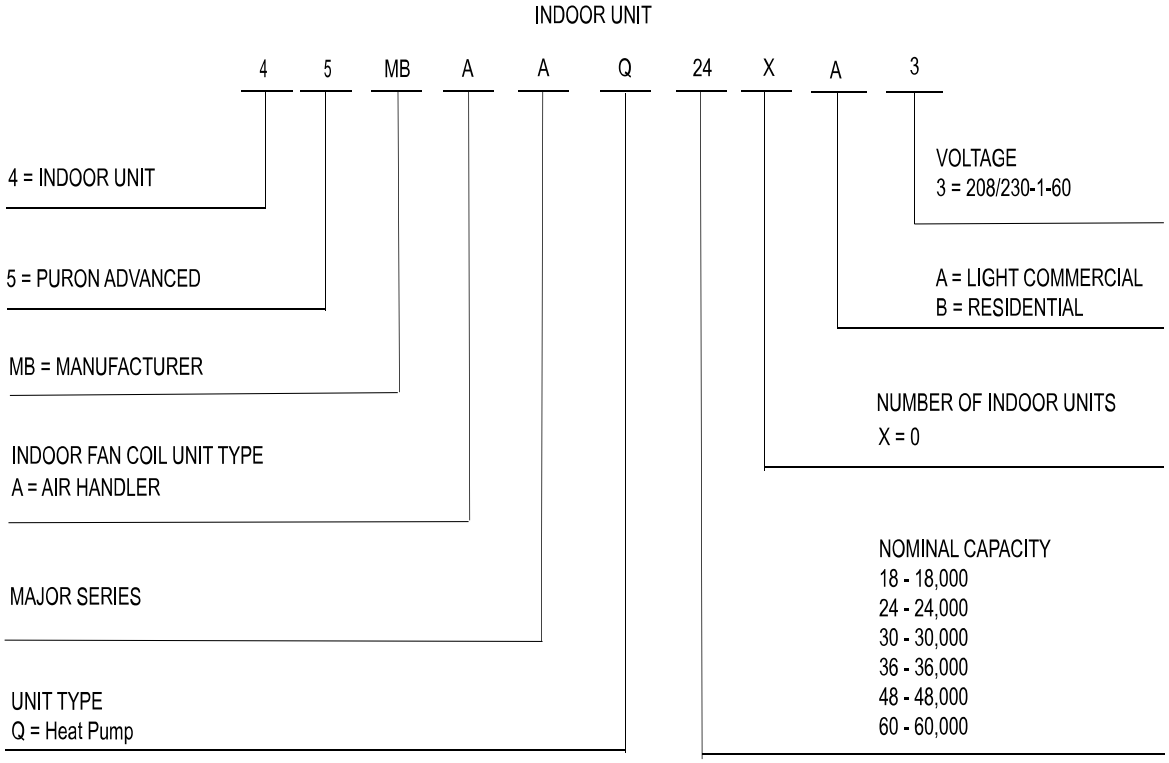

Fig. 1 —Model Number Nomenclature

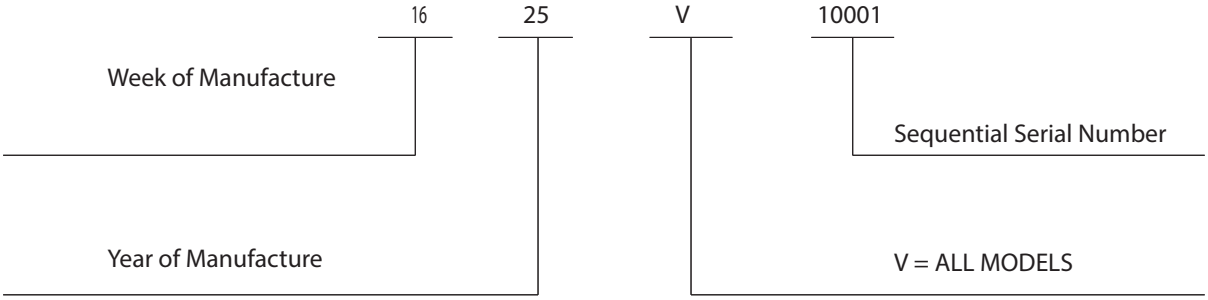

Fig. 2 —Serial Number Nomenclature

Use of the AHRI Certified TM Mark indicates a manufacturer's participation in the program For verification of certification for individual products, go to www.ahridirectory.org.

AUXILIARY CONTACTS FOUND ON 24V BOARD

Work Terminal Port CN23 - Normally Open Dry Contact (Output)

- The WORK terminal port is linked to the unit's indoor blower
- When the indoor blower is off, the contact is open
- When the indoor blower is running, the contact is closed
- There is no voltage from CN23, power is provided from the external control system and not from the unit.
- The contacts are rated at 250VAC and 10 AMP maximum
- If an active 24V signal output is required, G and C ports (thermostat connections) may be used instead.

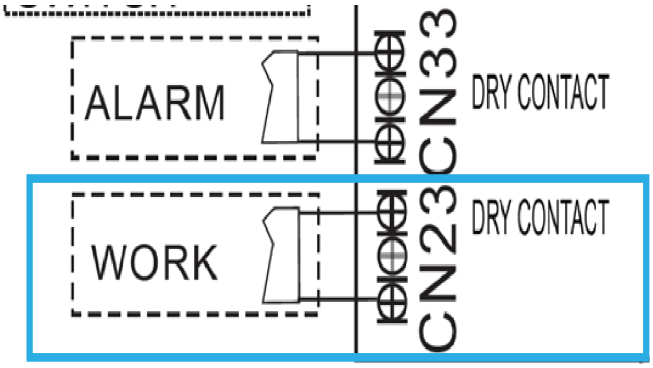

Fig. 3 —Work Terminal

ALARM Terminal Port CN33 - Normally Open DRY CONTACT (OUTPUT):

- Allows the terminal port to connect to an external ALARM interface or annunciator
- There is no voltage from CN33, power is provided from the ALARM system and not from the unit
- The contacts are rated at 250VAC and 10 AMP maximum
- When the unit experiences a problem, the contact closes, and the ALARM is triggered.

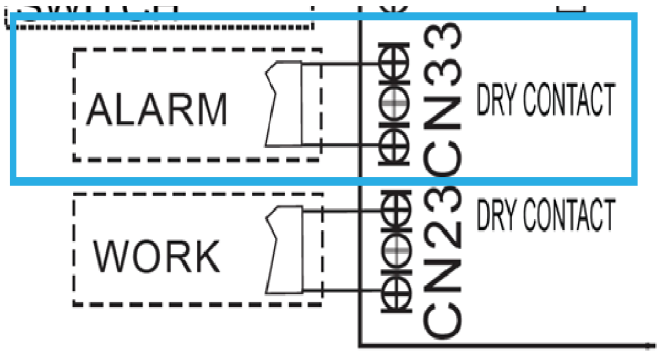

Fig. 4 —Alarm Terminal

UV LED Terminal Port CN43 - OUTPUT 24VAC:

- The UV LED port is linked to the unit's fan
- When the fan is running, the relay is closed and there is an output of 24VAC through the contacts that can be used to power a compatible UV LED LIGHT
- May also be used to power a pilot relay with 24VAC coil to control other peripherals

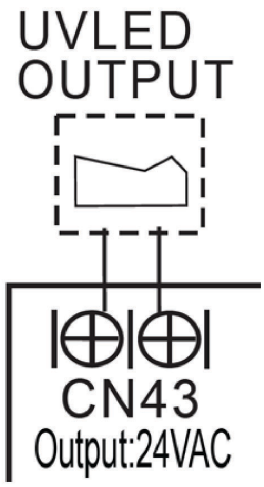

Fig. 5 —UV LED Terminal

Remote control (ON-OFF) terminal port CN2 and jumper JR1 - INPUT:

- Remove the jumper JR1 to enable the ON-OFF function
- When the remote switch is off (OPEN); the unit is OFF
- When remote switch is on (CLOSE); the unit is ON
- When the remote switch is close/open, the unit responds to the demand within 2 seconds
- When the remote switch is on, you can use the included remote controller or wired controller to operate the unit as normal.
- When the remote switch off, the unit will not respond to the command from the remote controller or wired controller and a CP code is displayed on the board.

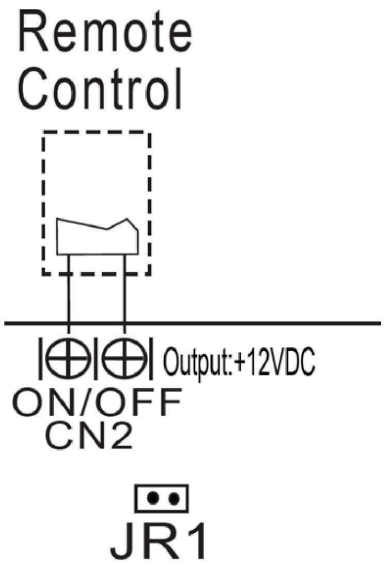

Fig. 6 —Remote Control Terminal

<u>KEY1 Instructions (For Wired Controller only)</u>

- Press KEY1 to enter the forced automatic mode, press KEY1 again to enter the forced cooling mode (LED display FC), and press KEY1 again to shut down.
- Long press KEY1 under forced cooling mode (LED display FC) 5s to enter forced defrost mode.

AUXILIARY CONTACTS FOUND ON THE MAIN BOARD

WATER LEVEL Switch Terminal Port CN23 - SWITCH INPUT:

- To enable this switch, jumper J7 must be removed
- A field supplied float switch can be directly connected to CN23
- CLOSED contacts = normal
- OPEN contacts = overflow
- When an overflow condition occurs, a signal is sent to the system to turn it off
- Alarm EHDE appears.

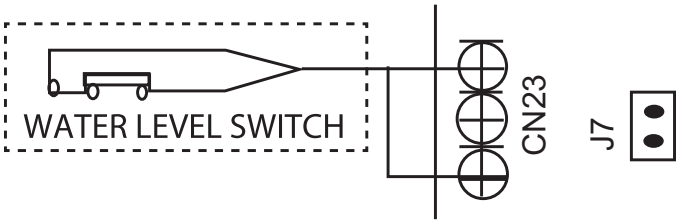

Fig. 7 —Water Level

ROTARY AND DIP SWITCHES

FOR SETTING NETADDRESS				
S1+SW8				
CODE	0~F	0~F	0~F	0~F
NETADDRESS	0~15	16~31	32~47	48~63
FACTORY SETTING	✓			

Fig. 8 —Net Address Factory Setting

Address DIP Switch:

Address dialing S1+SW8: When the user uses the centralized controller, the address dialing is required.

Network address: The address silkscreen is NET address, which is composed of a 16-bit address rotary code S1 plus a two-digit DIP switch SW8 [Set during engineering installation, no network function does not need to be set].

When SW8 is 00 (the dialing code is not connected), the network address value is the value of S1;

When SW8 is 10 (corresponding to the switch of the hardware connected to the 10K resistor), the network address value is S1 plus 16;

Determined by dial code SW8 1-10K 2-5.1K

When SW8 is 01 (corresponding to the dial code of the 5.1K resistor connected to the hardware is turned on), the network address value is the value of S1 plus 32;

When SW8 is 11 (all dialing codes are on), the network address value is the value of S1 plus 48.

Table 2 — Table A for use with dip switch 2-4

S3	S3 (°F)	S3 (°C)
0	OFF	OFF
1	-22	-30
2	-18	-28
3	-15	-26
4	-11	-24
5	-8	-22
6	-4	-20
7	3	-16
8	10	-12
9	18	-8
A	25	-4
B	32	0
C	36	2
D	39	4
E	43	6
F	46	8

Table 3 — Determined by dial code SW8 1-10K 2-5.1K

Dial Code Selection	NET Address
ON 1 2	S1 + 48
ON 1 2	S1 + 32
ON 1 2	S1 + 16
ON 1 2	S1

For Setting Power

FOR SETTING POWER(DC MOTOR MODEL ONLY)								
ENC1								
CODE	0	3	5	8	9	A	C	E
CAPACTIY	AUTO	12K	18K	24K	30K	36K	48K	60K
FACTORY SETTING	✓	ACCORDING TO RELATED MODEL						

Fig. 9 —Setting Power (DC Model Only)

Dial-switch ENC1: The indoor PCB is universal designed for whole series units from 12K to 60K. This ENC1 setting will tell the main program what size the unit is:

Range: AUTO, 12K,18K,.....,60K

NOTE: AUTO means the indoor unit is equipped with different outdoor units, which can automatically identify the capacity of the outdoor unit, model, mono or multi zone and match the indoor unit parameters.

Manufacturer reserves the right to change, at any time, specifications and designs without notice and without obligations.

Refrigerant Leakage Detection - Leakage Sensor

The indoor unit is equipped with a refrigerant dissipation sensor. When a leak is detected either error code EH C1 (Leak Detected), or EH C2 (Leak Detected Sensor out of range) will be displayed on indoor display. The outdoor unit will shut off and the indoor fan will run at turbo speed, and louvers will fully open. An audible alarm will be triggered.

For single zone application, if refrigerant leak drops below LFL threshold audible alarm will reset after two minutes and the error code will clear after five minutes. Power cycling the outdoor unit (ODU) for five minutes will reset the audible alarm and the error code.

For multi-zone applications the outdoor unit will shut off, an emergency shutoff valve will close in the outdoor unit, all EEVs will close, and all indoor units will run at turbo fan speed. EH C1 or EH C2 will be displayed at the indoor unit detecting the leak. EC C1 will be displayed at indoor units not detecting a leak. An audible alarm will be triggered at indoor unit detecting the leak. If leak drops below LFL threshold the audible alarm will reset after two minutes, error codes will clear after five minutes, and emergency shutoff valve will automatically open after two and one half hours.

The shutoff valve time-lock can be bypassed by pushing and holding the point check button in the MZU for 10 seconds provided no leak is being detecting. Power cycling the MZU will not reset the time lock.

24V Thermostats Setting

24V THERMOSTATS SETTING							
	S3	SW1	SW2	SW3	SW4	S4	SW5
CODE	0~F	ON~OFF	ON~OFF	ON~OFF	ON~OFF	ON~OFF	ON～OFF
FACTORY SETTING	✓	✓	✓	✓	✓	✓	✓

Fig. 10 —24V Thermostats Setting

The 24V thermostat mode needs to refer to the following settings:

Table 4 — Indoor Unit Dial Code

NO.	DIAL CODE	CONTROL SCENARIO	FUNCTION	ON	OFF	NOTE
1	SW1-2	1,2	Anti-cold blow protection option	NO	[Default] YES	
2	SW1-3	1,2	Single cooling / heating and cooling options	Cooling	[Default] Cooling & Heating	
3	SW2-1	1	Compressor Running (demand working with heat pump+ Electric heat)	Compressor slower speed	[Default] Faster Compressor	Only affects compressor and W1
4	SW2-1	2	Temperature differential to activate first stage auxiliary heat (the GAP of T1 and Ts), Wire controller demand with heat pump + Electric heat working together	2°F (1°C)	[Default]	
5	SW2-2	2	Electric heat on delay	YES	[Default] NO	
6	SW2-3	2	Electric auxiliary heating delay to start time	30 minutes	[Default] 15 minutes	Based on SW2-2 is ON

NO.	DIAL CODE	CONTROL SCENARIO	FUNCTION	ON	OFF	NOTE
7	SW2-4	1	Compressor	The operation of heat pump is limited by the outdoor temperature, and the operation of auxiliary heat is not limited.The system makes judgments according to the following rules: 1) The compressor can be operated when the outdoor temperature is ⩾S3 DIP switch temperature +2 °C. 2) The compressor cannot be operated when the outdoor temperature is lower than the S3 DIP switch temperature.	[Default] The operation of heat pump is limited by the outdoor temperature, and the operation of auxiliary heat is not limited. The system makes judgments based on the following rules: 1) The compressor cannot be operated when the outdoor temperature is lower than the S3 DIP switch. 2) The compressor can be operated when the outdoor temperature is ⩾S3 DIP switch temperature +2 °C.	SW2-4 and S3 need to work together
8	SW2-4	2	Compressor/Auxiliary heat outdoor ambient lockout	The operation of heat pump is limited by the outdoor temperature, and the operation of auxiliary heat is not limited.The system makes judgments according to the following rules: 1) The compressor can be operated when the outdoor temperature is ≥S3 DIP switch temperature +2 °C. 2) The compressor cannot be operated when the outdoor temperature is lower than the S3 DIP switch temperature.	[Default] Only one heat pump or auxiliary heat can be operated.The system makes judgments according to the following rules: 1) When the outdoor temperature is lower than the S3 DIP switch temperature, the compressor is not allowed to operated, but auxiliary heat is allowed to operated; 2) When the outdoor temperature is ≥S3 DIP switch temperature +2(°C), the compressor can be operated, but auxiliary heat cannot be operated.	
9	Rotary Switch S3	1,2	Set outdoor temperature Limitation (for auxiliary heating or compressor)	Table A		
10	SW3-1	1	Maximum continuous runtime allowed before system automatically stages up capacity to satisfy set point. This adds 1 to 5°F to the user set point in the calculated control point to increase capacity and satisfy user set point	30 minutes	[Default] 90 minutes	
11	SW3-2	1	Cooling and heating Y/Y2 temperature differential adjustment.	Compressor slower speed	[Default] Faster Compressor	Only affects compressor
12	SW3-3	1	Compressor Running (demand working with heat pump+ Electric heat)	Compressor slower speed	[Default] Faster Compressor	Only affects compressor and W2
13	SW3-3	2	Temperature differential to activate second stage auxiliary heating (the GAP of T1 and Ts) Wire controller demand with heat pump + Electric heat working together	4°F(2°C)	[Default] 6°F (3°C)	
14	SW3-4	1	Fan speed of cooling mode when 24V Thermostat is applied for.	Turbo	High	
15	SW4-1 SW4-2 SW4-3	1,2	Electric heat nominal CFM adjustment	Available settings are 000/001/010/011. Each digit corresponds an individual switch position. For example [SW4-1 OFF, SW4-2 ON, SW4 -3 OFF] = 010		
16	SW4-4	2	Temperature differential to activate third stage auxiliary heating (the GAP of T1 and Ts) Wire controller demand with heat pump+ Electric heat working together	6°F(3°C)	[Default] 8°F (4°C)	Only valid for product which has three stage auxiliary heating.

NO.	DIAL CODE	CONTROL SCENARIO	FUNCTION	ON	OFF	NOTE
17	S4-4	1	Default ON	[Default] For single stage supplemental heat,W1 and W2 are connected	For dual stage supplemental heat, W1 and W2 are controlled independently.	
18	S4-2	1	DH function selection	[Default] Dehumidification control not available	Dehumidification feature is enabled through thermostat	
19	SW5-3	1, 2	L or Alarm relay selection	L output 24V or alarm relay close only when refrigerant sensor fault or R454B refrigerant leakage be detected	[Default] L output 24V or alarm relay close when any fault be detected	
20	SW5-4	1	R output selection	R stop output 24V when refrigerant sensor fault or R454B refrigerant leakage be detected	Default] R keep output 24V even when refrigerant sensor fault or R454B refrigerant leakage be detected	

Table 5 — Control Scenario

CONTROL SCENARIO	1	24V, Tstat
	2	Wired Controller

SW1	Control type	IDU and ODU Connection	Note
	Wired controller / 24V thermostat	(S1+S2) / 24V connection	Auto Discovery
	Wired controller	S1+S2	Scenario 2
	24V Thermostat	S1+S2	Scenario 1

Fig. 11 —SW 1 Configuration

INDOOR UNIT WIRING

Before proceeding with electrical connections, make certain that the supply voltage, frequency, phase, and ampacity are as specified on the unit rating plate. Review the unit wiring label for proper field high and low voltage wiring.

Ensure all electrical connections are in accordance with the NEC and any local codes or ordinances that may apply. Use copper wire only.

⚠ CAUTION

PROPERTY DAMAGE HAZARD

Failure to follow this caution may result in product or property damage. If a disconnect switch is to be mounted on the unit, select a location where the drill or fastener will not contact electrical or refrigerant components.

⚠ WARNING

ELECTRICAL SHOCK HAZARD

Failure to follow this warning could result in personal injury or death. Field wires on the line side of the disconnect found in the fan coil unit remain live, even when the pull-out is removed.

Service and maintenance to incoming wiring cannot be performed until the main disconnect switch (remote to the unit) is turned off.

⚠ CAUTION

EQUIPMENT DAMAGE HAZARD

Failure to follow this caution may result in equipment damage or improper operation. Size the wires in accordance with NEC and local codes.

Use the following steps to wire the indoor unit.

NOTE: Wiring in this section is for the base unit ONLY.

1. Prepare the cable for connection.
   a. Using wire strippers, strip the insulation from both ends of the signal cable to reveal about 1/2 in (12mm) of wire.
   b. Strip the insulation from both ends of the wires.
   c. Use a wire crimper to crimp the fork terminals to the ends of the wires.
2. Open the indoor unit's front panel. Use a screwdriver to remove the cover of the electric control box on the indoor unit.
3. Thread the power cable and the signal cable through the wire outlet.
4. Connect the fork terminals to the terminals. Match the wire colors/labels with the labels on the terminal block.
5. Firmly screw the fork terminals of each wire to its corresponding terminal. Refer to the serial number and wiring diagram located on the cover of the electric control box.

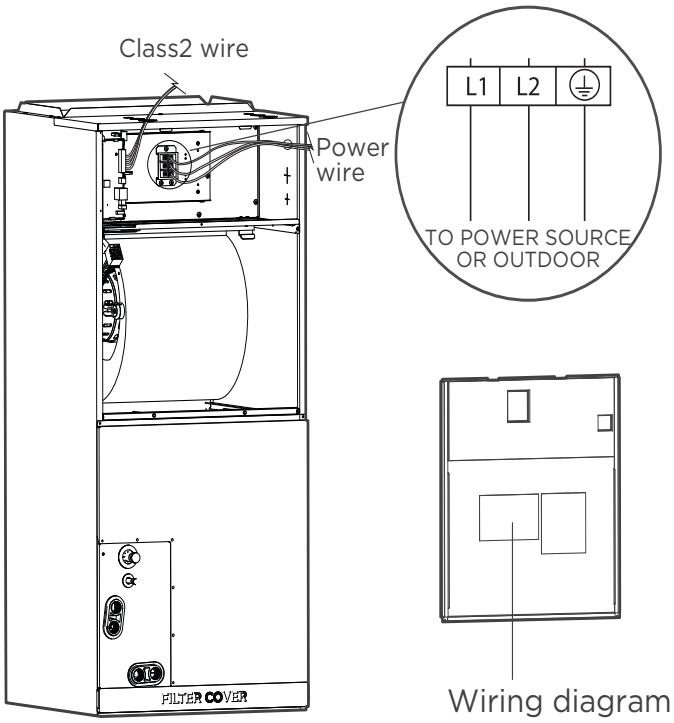

Fig. 12 —Indoor Unit Power Wiring

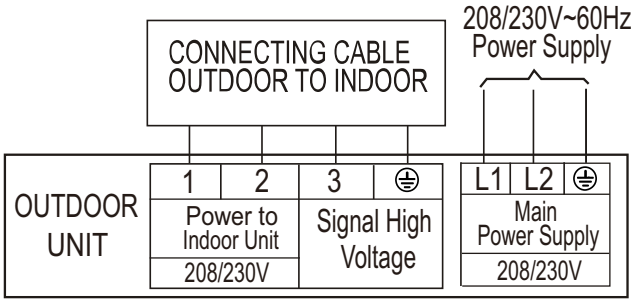

Fig. 13 —Connection Diagram (208/230V) Sizes 18K - 36K (XB3)

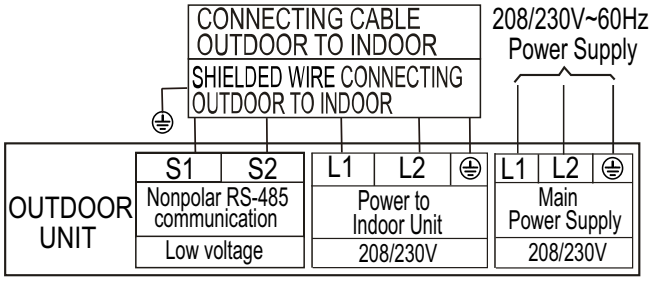

Fig. 14 —Connection Diagram (208/230V) Sizes 36K (XA3) - 60K

NOTE: The electric auxiliary heat wiring diagram is supplied with the accessories. Paste the wiring diagram in the designated position after installing the heat modules.

IMPORTANT: A separate power supply is required for an Auxiliary Electric Heater. Do not power the electric heater directly from the outdoor unit. Always follow the recommendations listed in the installation instructions manuals. Refer to the EHKMC Installation Manual.

⚠ CAUTION

Personal Injury Risk

While connecting the wires, strictly follow the wiring diagram.

The refrigerant circuit can become very hot.

Keep the interconnection cable away from the copper tube.

6. Clamp down the cable with the cable clamp. The cable must not be loose or put strain on the fork terminals.
7. Reattach the electric box cover.

Specific Wiring Methods

⚠ WARNING

Equipment Damage Risk

Refer to the wiring nameplate for the wiring method. Do not connect 24V AC to S1 - S2, as this will damage the system.

SCENARIO 1:

This is the preferred method of control. This allows a 24 volt thermostat to be used with the air handler.

- The **B** terminal and **W** terminal should not be used together.
- **W** should only be used with a conventional thermostat for the heat demand.
- DS is a reserve Terminal.

To use a 24V thermostat, refer to the Fig. 15 or Fig. 16 Scenario 1.

SCENARIO 2 (DEFAULT):

This allows the 1401 wired controller to be used with the air handler between indoor and outdoor units.

- None of the 24 volt terminals in the air handler are to be used for Scenario 2.
- Connect the **Ha/Hb** terminals on the wired controller to the **Ha/Hb** terminals on the indoor display board with 16 AWG shielded/stranded wire.

To use the 1401 wired controller, refer to Fig. 15 or Fig. 16 Scenario 2.

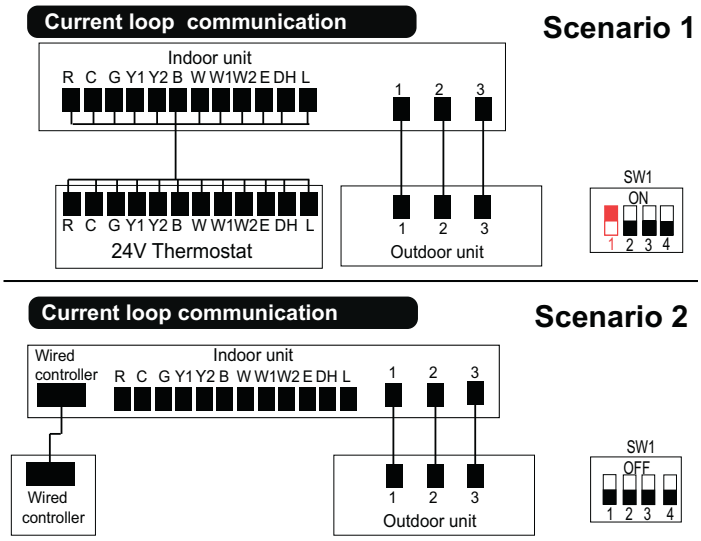

Fig. 15 —Connection Methods for 18K-36K Residential Units

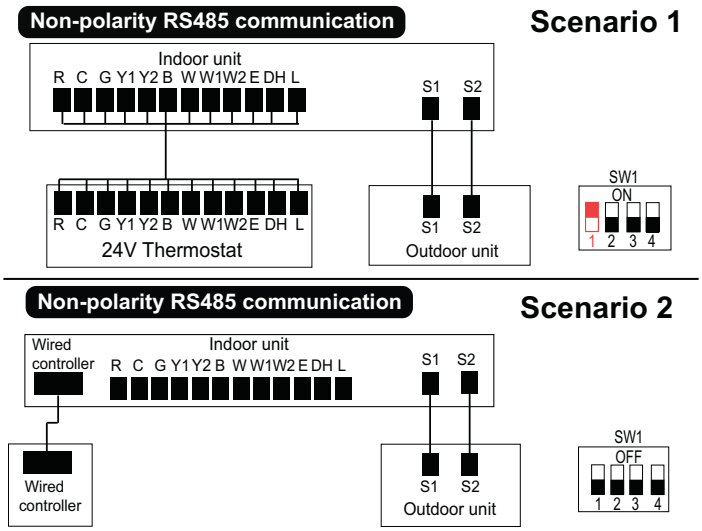

Fig. 16 —Connection Methods for 36K-60K Light Commercial Units

WIRING DIAGRAMS

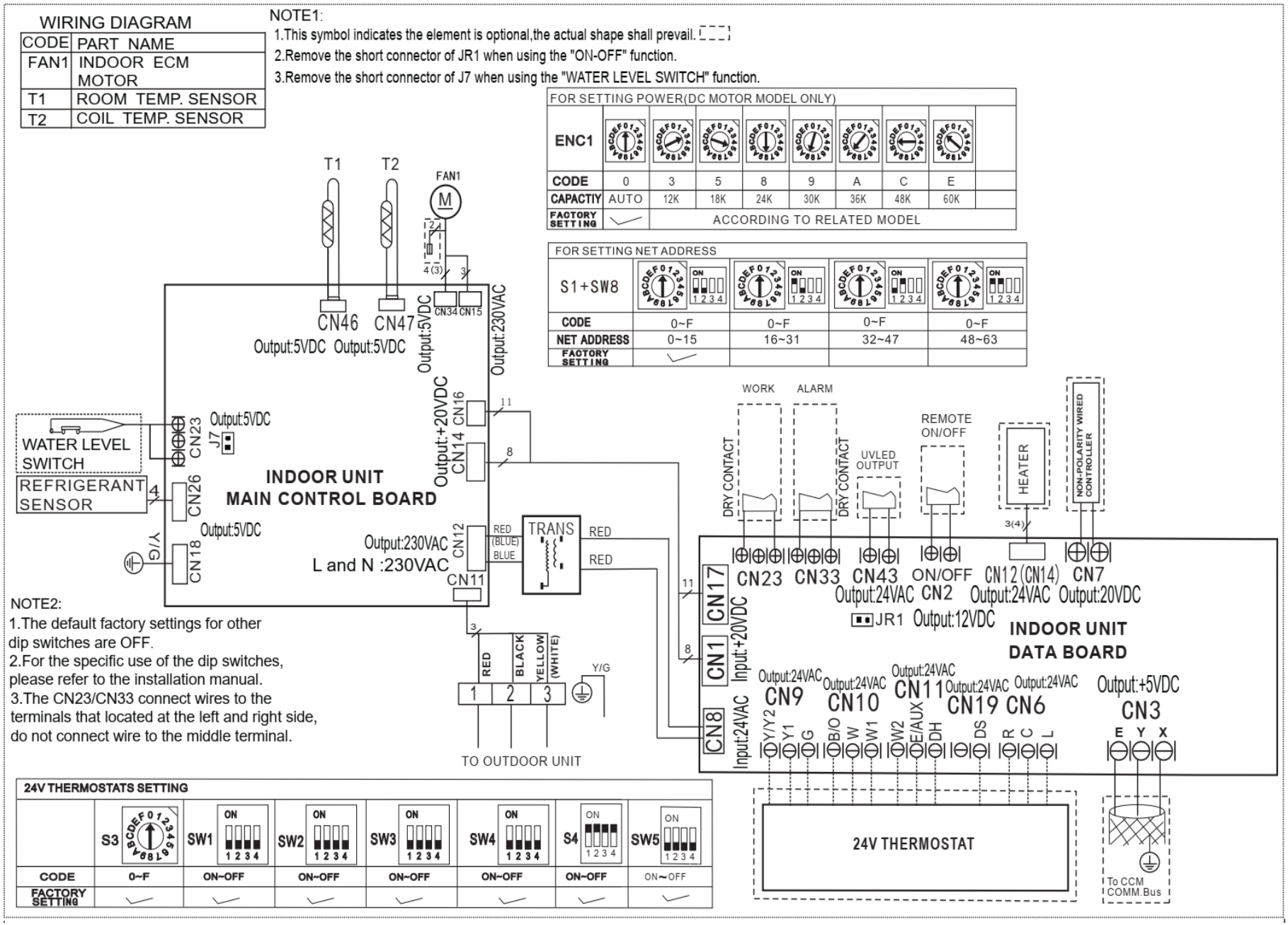

Fig. 17 —Indoor Unit Wiring Diagram (18K~24K)

Manufacturer reserves the right to change, at any time, specifications and designs without notice and without obligations.

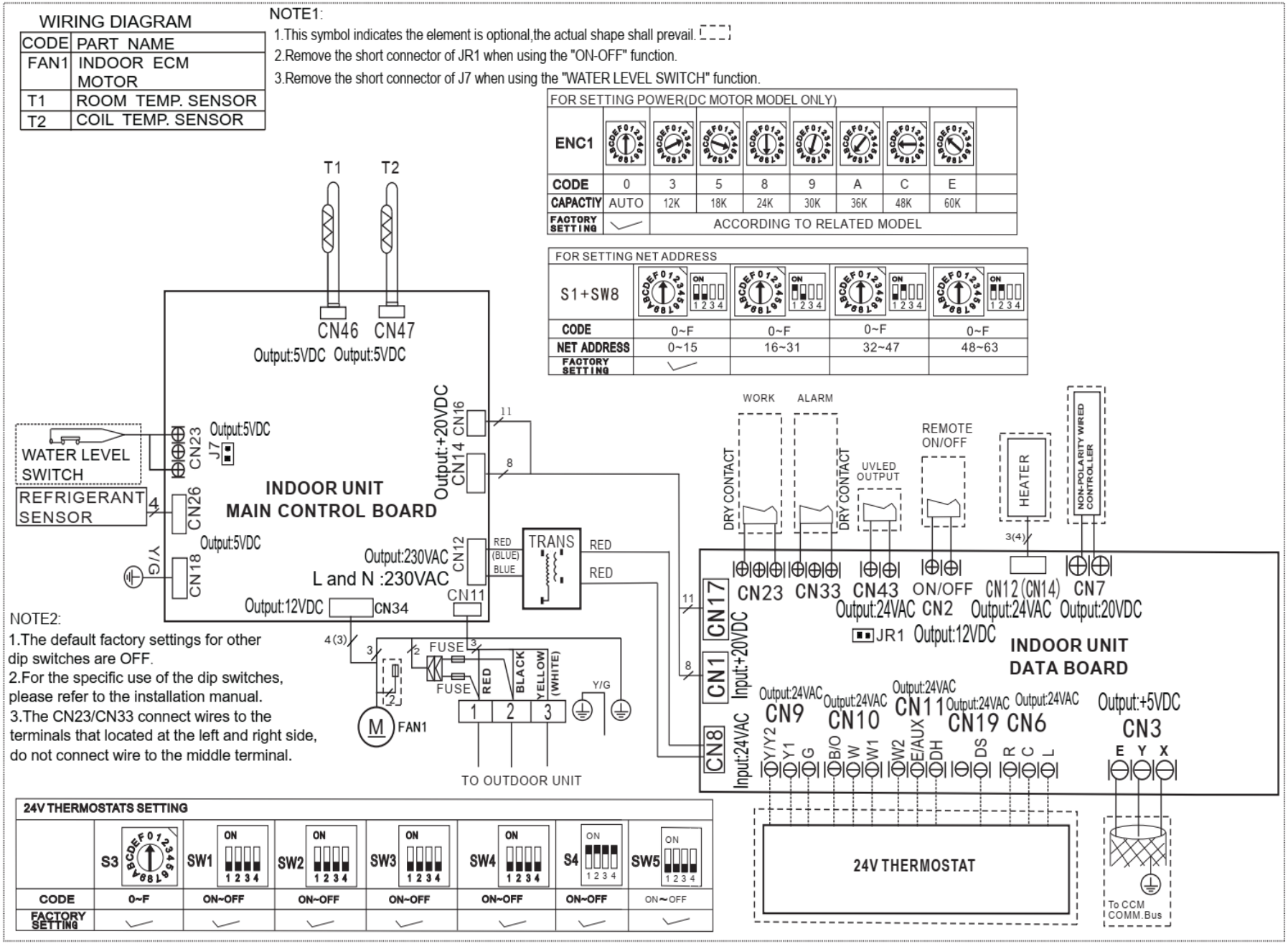

NOTE: 115 Volt application is NOT supported.

Fig. 18 — Wiring Diagram Sizes 30K, 36K (XB3)

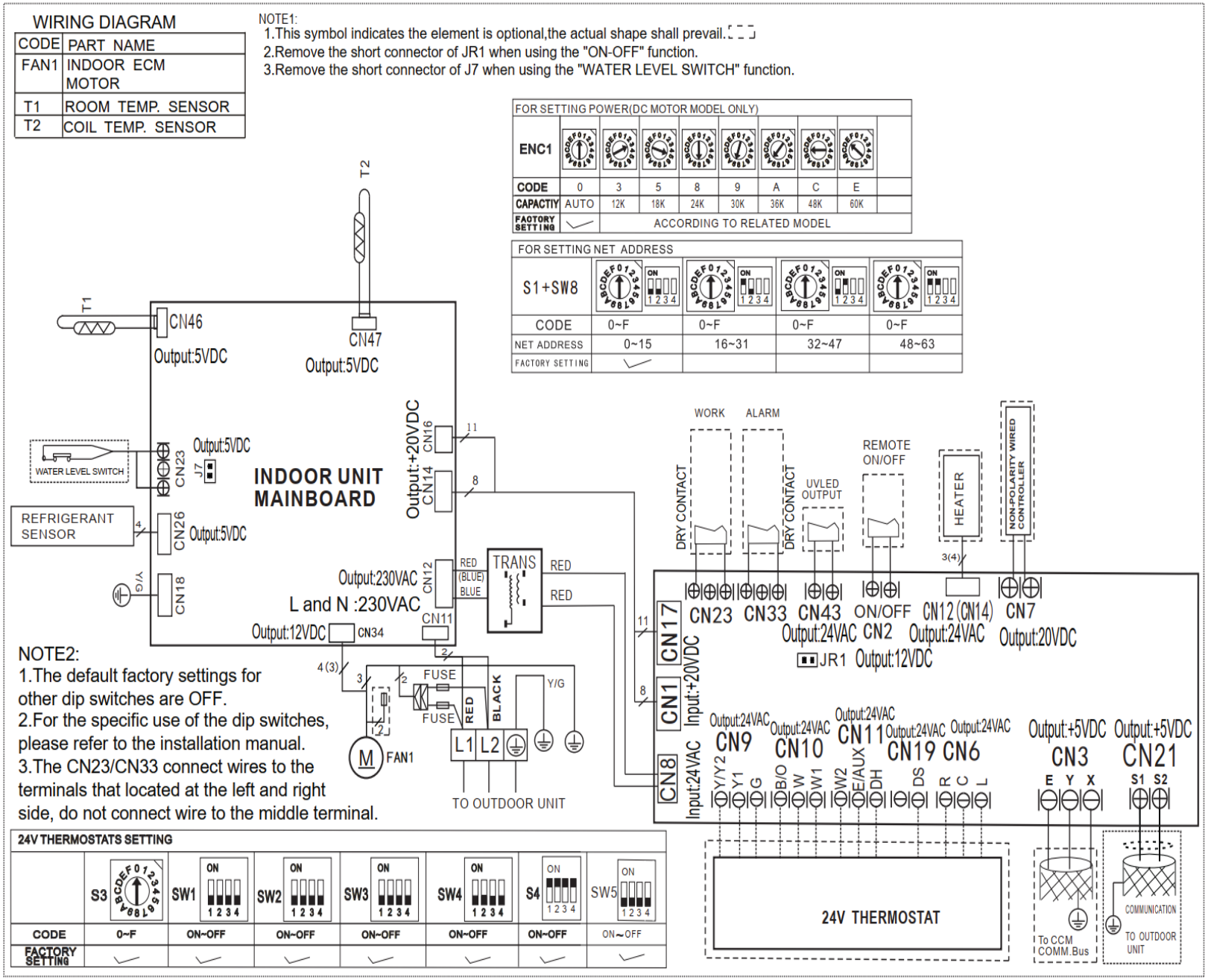

NOTE: 115 Volt application is NOT supported.

Fig. 19 — Wiring Diagram Sizes 36K (XA3), 48K, 60K

Main PCB and 24V Board Terminal Definitions

Main PCB	
TERMINAL	**FUNCTION DEFINITION**
CN11	Input voltage 208/230VAC, internal power input terminal
CN34	Output voltage 12V, communication port with fan
CN18	Main board grounding
CN26	Output voltage 5V, RDS port
CN23	Output voltage 5V, water level switch short circuit
CN46	Output voltage 5V, T1 temperature sensor port
CN7	Output voltage 5V, T2A and T2B pipe temperature sensor port
CN47	Output voltage 5V, T2 tube temperature sensor port
CN16/CN14	Output voltage 20V, communication port with 24V board
CN12	Output voltage 208/230V, 24V transformer input

Table 6 – Main PCB Terminal Definitions

24V Board	
TERMINAL	**FUNCTION DEFINITION**
CN8	Output voltage 24VAC, 24V power supply
CN1/CN17	Input voltage 20V, communication port with main board
CN23	Passive, dry contact
CN33	Passive, dry contact
CN43	Output voltage 24VAC, UV control signal
CN2	Output voltage 12V, remote ON/OFF switch
CN12 (CN14)	Output voltage 24VAC, auxiliary heating control signal
CN27	Output voltage 20V, two-core wire controller power supply communication port
CN15	Output voltage 24VAC, 24V non-communication control external machine port
CN21	Output voltage 5V, with outdoor 485 communication port
CN3	Output voltage 5V, with central controller 485 communication port
CN6	Output voltage 24VAC, thermostat signal input port
CN19	Output voltage 24VAC, thermostat signal input port
CN11	Output voltage 24VAC, thermostat signal input port
CN10	Output voltage 24VAC, thermostat signal input port
CN9	Output voltage 24VAC, thermostat signal input port

Table 7 – 24V Board Terminal Definitions

Manufacturer reserves the right to change, at any time, specifications and designs without notice and without obligations.

24V SIGNAL CHART

Mode	Priority	G	Y1	Y/Y2	B	W	W1	W2	E/AUX	DH	Fan speed	Display
OFF	/	0	0	0	0	0	0	0	0	*	OFF	00
FAN	7	1	0	0	*	0	0	0	0	*	Low	01
Cooling stage 1	6	*	1	0	0	0	0	0	0	1	Mid	02
Cooling stage 2		*	*	1	0	0	0	0	0	1	High	03
Dehumidification 1		*	1	0	0	0	0	0	0	0	Low	04
Dehumidification 2		*	*	1	0	0	0	0	0	0	Low	05
Heat pump stage 1	5	*	1	0	1	0	0	0	0	1	Mid	06
Heat pump stage 2		*	*	1	1	0	0	0	0	1	High	07
Heat pump stage 2		*	*	*	*	1	0	0	0	1	High	
Electric heater kit 1	3	*	0	0	*	0	1	0	0	*	Turbo	08
Electric heater kit 2		*	0	0	*	0	0	1	0	*	Turbo	
Electric heater kit 1 and kit 2		*	0	0	*	0	1	1	0	*	Turbo	09
Heat pump stage 1 + Electric heater kit 1	4	*	1	0	1	0	1	0	0	1	Turbo	10
Heat pump stage 1 + Electric heater kit 2		*	1	0	1	0	0	1	0	1	Turbo	
Heat pump stage 2 + Electric heater kit 1		*	*	1	1	0	1	0	0	1	Turbo	
Heat pump stage 2 + Electric heater kit 1		*	*	*	*	1	1	0	0	1	Turbo	
Heat pump stage 2 + Electric heater kit 2		*	*	1	1	0	0	1	0	1	Turbo	
Heat pump stage 2 + Electric heater kit 2		*	*	*	*	1	0	1	0	1	Turbo	
Heat pump stage 1 + Electric heater kit 1 and kit 2		*	1	0	1	0	1	1	0	1	Turbo	11
Heat pump stage 2 + Electric heater kit 1 and kit 2		*	*	1	1	0	1	1	0	1	Turbo	
Heat pump stage 2 + Electric heater kit 1 and kit 2		*	*	*	*	1	1	1	0	1	Turbo	
Emergency heat	1	*	*	*	*	*	*	*	1	*	Turbo	12

NOTE: :

1. 24V signal 0 : No 24V signal *?1 or 0
2. The AHU will turn off if the 24V input cannot meet the table.

REFRIGERANT LINES

General refrigerant line sizing

1. The outdoor units are shipped with a full charge of R-454B refrigerant. All charges, line sizing, and capacities are based on runs of 25 ft. (7.6 m). For runs over 25 ft. (7.6 m), consult the product data.
2. Minimum refrigerant line length between the indoor and outdoor units is 10 ft. (3 m).
3. Refrigerant lines should not be buried in the ground. If it is necessary to bury the lines, not more than 36 in. (914 mm) should be buried. Provide a minimum 6 in. (152 mm) vertical rise to the service valves to prevent refrigerant migration.
4. Insulate the suction line. Use a minimum of ½ in. (12.7 mm) thick insulation. Closed-cell insulation is recommended in all long-line applications.
5. Special consideration should be given to isolating interconnecting tubing from the building structure. Isolate the tubing so that vibration or noise is not transmitted into the structure.
6. For piping runs greater than 25 ft. (7.6 m), add refrigerant up to the allowable length as specified in the installation manual.

Manufacturer reserves the right to change, at any time, specifications and designs without notice and without obligations.

TROUBLESHOOTING

SAFETY CAUTION

WARNING

Be sure to turn off all power supplies or disconnect all wires to avoid electric shock. While checking indoor/outdoor PCB, equip yourself with anti-static gloves or wrist strap to avoid damage to the board. Follow lockout procedures and all safety measures.

WARNING

Electricity remains in capacitors even when the power supply is off. Ensure the capacitors are fully discharged before troubleshooting.

Inverter Test Tool

NOTE: If using the inverter test tool for troubleshooting, shut off power, remove the electrical panel and locate the cable that is already connected to the test port on the outdoor unit. Connect the test tool to the cable with the connector provided with the test tool. After the maintenance is completed, insert the female end back into the port.

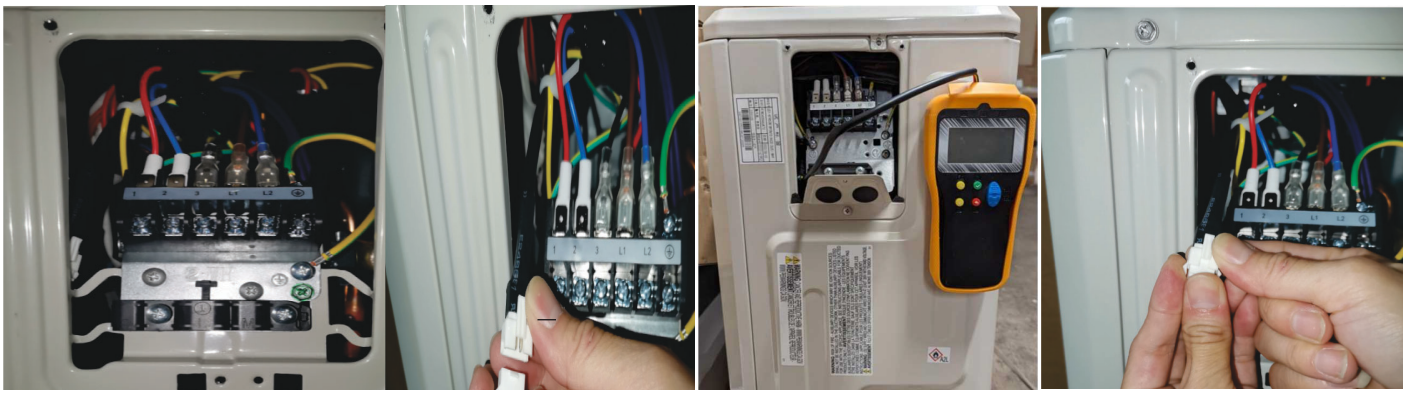

Step 1 Step 2 Step 3 Step 4

Fig. 20 —Inverter Test Tool Maintenance

Connect the Dr. SMART tool to the white terminal as shown in Step 3 above.

Fig. 21 —Dr. SMART Tool

NOTE: These pictures is for reference only. Actual appearance may vary.

GENERAL TROUBLESHOOTING

Error Display (Indoor Unit)

When the indoor unit encounters a recognized error, the operation lamp will flash in a corresponding series, the timer lamp may turn on or begin flashing, and an error code will be displayed. These error codes are described in the Table 8.

Table 8 — Error Codes

DISPLAY	MALFUNCTION AND PROTECTION INDICATION
EC07	ODU fan speed out of control
EC0d	ODU malfunction
EC51	ODU EEPROM parameter error
EC52	ODU coil temp sensor error
EC53	ODU ambient temp sensor error
EC54	COMP. discharge temp sensor error
EC56	IDU coil outlet temp sensor error
ECC1	Other IDU refrigerant sensor detects leakage (multi-zone)
EH00	IDU EEPROM malfunction
EH03	IDU fan speed out of control
EH0A	IDU EEPROM parameter error
EH0b	IDU main control and display boards communication error
EH0E	Water-level alarm malfunction
EH3A	External fan DC bus voltage is too low protection
EH3b	External fan DC bus voltage is too high fault
EH60	IDU room temp. sensor (T1) error
EH61	IDU coil temp. sensor (T2) error
EHbA	Communication error between indoor unit and external fan module
EHb3	Communication malfunction between wire and master control
EHC1	Refrigerant sensor detects leakage
EHC2	Refrigerant sensor is out of range and leakage is detected
EHC3	Refrigerant sensor is out of range
EL01	IDU & ODU communication error
EL0C	System lacks refrigerant
EL16	Communication malfunction between adapter board and outdoor main board
FHCC	Refrigerant sensor error
FL09	Mismatch between the new and old platforms
PC00	ODU IPM module protection
PC01	ODU voltage protection
PC02	Compressor top (or IPM) temp. protection
PC03	Pressure protection (low or high pressure)
PC04	Inverter compressor drive error
PC0L	Low ambient temp. protection
--	Mode conflict error
NOTE: The digital tube will show DF in defrost mode and FC in forced cooling mode. DF and FC are not error codes.	

Table 9 — Refrigerant Leak Detection Error Codes

EHC1	Refrigerant Sensor detects a leak
EHC2	Working condition of the refrigerant sensor is out of range and a leak is detected

If **you receive one of the codes in Table 9, call a technician as soon as possible. No need to panic, the unit goes into TURBO mode until the error code clears. There is a "beeping" noise coming from the indoor unit, which is normal in this case.**

QUICK MAINTENANCE BY ERROR CODE

Table 10 — Indoor PCB

PART REQUIRING REPLACEMENT	ERROR CODE							
	EL 01	EC 51	EC 52	EC 53	EC 54	EC 55	EC 5C	EC 57
Indoor PCB	√	x	x	x	x	x	x	x
Outdoor PCB	√	√	√	√	√	√	√	√
ODU coil temp. sensor	x	x	√	x	x	x	x	x
ODU ambient temp. sensor	x	x	x	√	x	x	x	x
COMP. discharge temp. sensor	x	x	x	x	√	x	x	x
IPM module temperature sensor	x	x	x	x	x	√	x	x
Pressure sensor	x	x	x	x	x	x	√	x
Refrigerant pipe temperature sensor	x	x	x	x	x	x	x	√
Condenser temperature sensor	x	x	x	x	x	x	x	x
Reactor	√	x	x	x	x	x	x	x
IPM module board	√	x	x	x	x	x	x	x

Table 11 — Outdoor PCB

PART REQUIRING REPLACEMENT	ERROR CODE								
	EC 07	PC 00	PC 10/PC 11/ PC 12	PC 02	PC 08 / PC 42 / PC 44/ PC 46/ PC 49	PC 0F	PC 41	PH 90	PH 91
Outdoor PCB	√	√	√	√	√	√	√	x	x
Outdoor fan motor	√	√	x	x	√	x	x	x	x
Reactor or inductance	x	√	√	x	√	√	x	x	x
Compressor	x	√	x	x	x	x	x	x	x
IPM module board	x	√	√	x	√	x	x	x	x
Bridge rectifier	x	√	√	x	√	x	x	x	x
Evaporator coil temperature sensor	x	x	x	x	x	x	x	√	√
PFC module	x	x	x	x	x	√	x	x	x
Additional refrigerant	x	x	x	x	x	x	x	x	x
Over load protector	x	x	x	√	x	x	x	x	x
ODU ambient temp. sensor	x	x	x	x	x	x	x	x	x
Refrigerant pipe temperature sensor	x	x	x	x	x	x	x	x	x
Indoor fan	x	x	x	x	x	x	x	√	x
Indoor PCB	x	x	x	x	x	x	x	√	√

QUICK MAINTENANCE BY ERROR CODE (continued)

Part requiring replacement	Error Code							
	PC 40	PC 43	PC 45	PC 06	PC 0a	PC 30	PC 31	EL 16
Outdoor PCB	√	√	x	√	√	√	√	√
Outdoor fan motor	x	x	x	x	√	√	√	x
ODU coil temp. sensor	x	x	x	x	√	x	x	x
COMP. discharge temp. sensor	x	x	x	√	x	x	x	x
Compressor	x	√	x	x	x	x	x	x
IPM module board	x	x	√	x	x	x	x	x
Additional refrigerant	x	x	x	√	√	x	√	x
Electric control box	√	x	x	x	x	x	x	x
High pressure switch	x	x	x	x	x	√	x	x
Low pressure switch	x	x	x	x	x	x	√	x
Adapter board	x	x	x	x	x	x	x	√

Manufacturer reserves the right to change, at any time, specifications and designs without notice and without obligations.

TROUBLESHOOTING BY ERROR CODE

EH 00/ EH 0A / EC 51 (EEPROM Malfunction Error Diagnosis and Solution)

Description: Indoor or outdoor PCB main chip does not receive feedback from EEPROM chip.

Recommended parts to prepare: Indoor PCB, Outdoor PCB

Troubleshooting and repair:

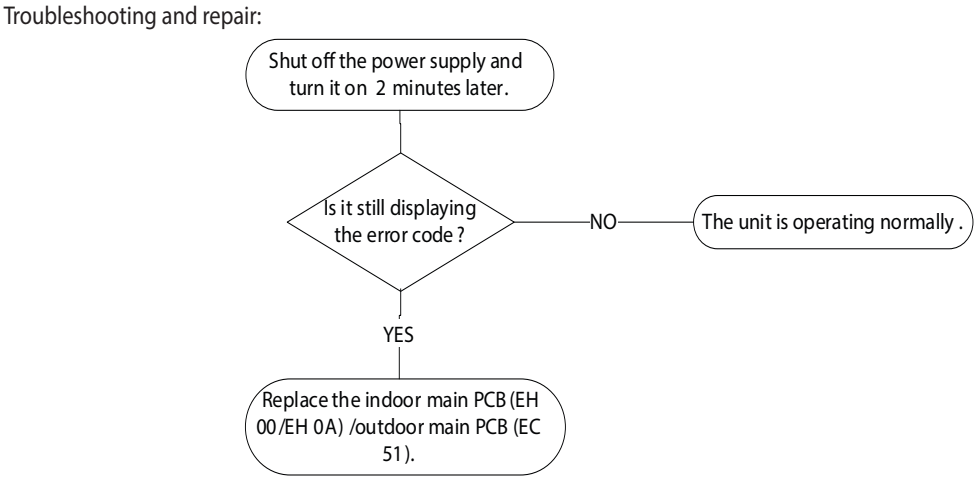

Fig. 22 —EC 51

Remarks:

EEPROM: A read-only memory whose contents can be erased and reprogrammed using a pulsed voltage.

The location of the EEPROM chip on the outdoor PCB is shown in the following image:

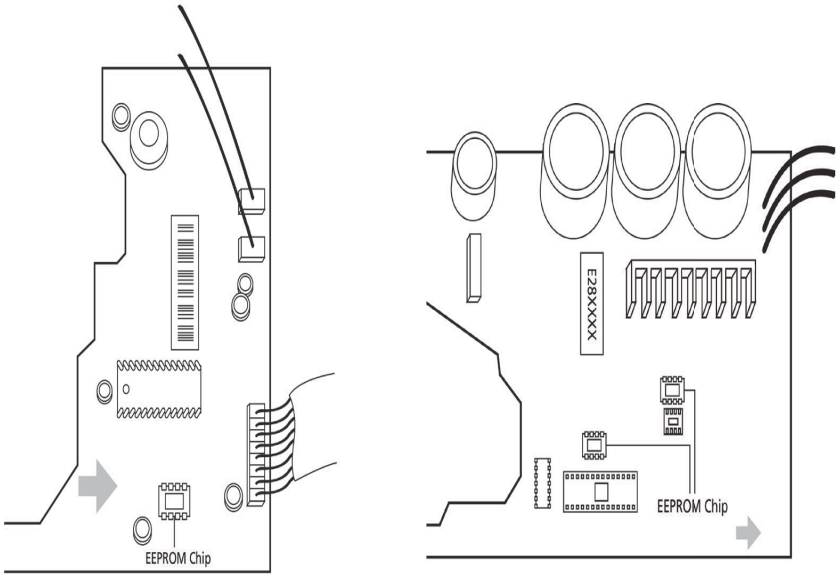

Fig. 23 —Location of EPROM Chip

NOTE: This picture is only for reference, actual appearance may vary.

IMPORTANT: Troubleshooting and repair of compressor driven chip EEPROM parameter error sand communication errors between outdoor main chip and compressor driven chip are same as EC 51.

EL 01 (Indoor and Outdoor Unit Communication Error Diagnosis and Solution)

Description: Indoor unit can not communicate with outdoor unit

Recommended parts to prepare: Signal Wires, Magnetic Ring, Indoor PCB, Outdoor PCB

Troubleshooting and repair: RS 485 Communication
:

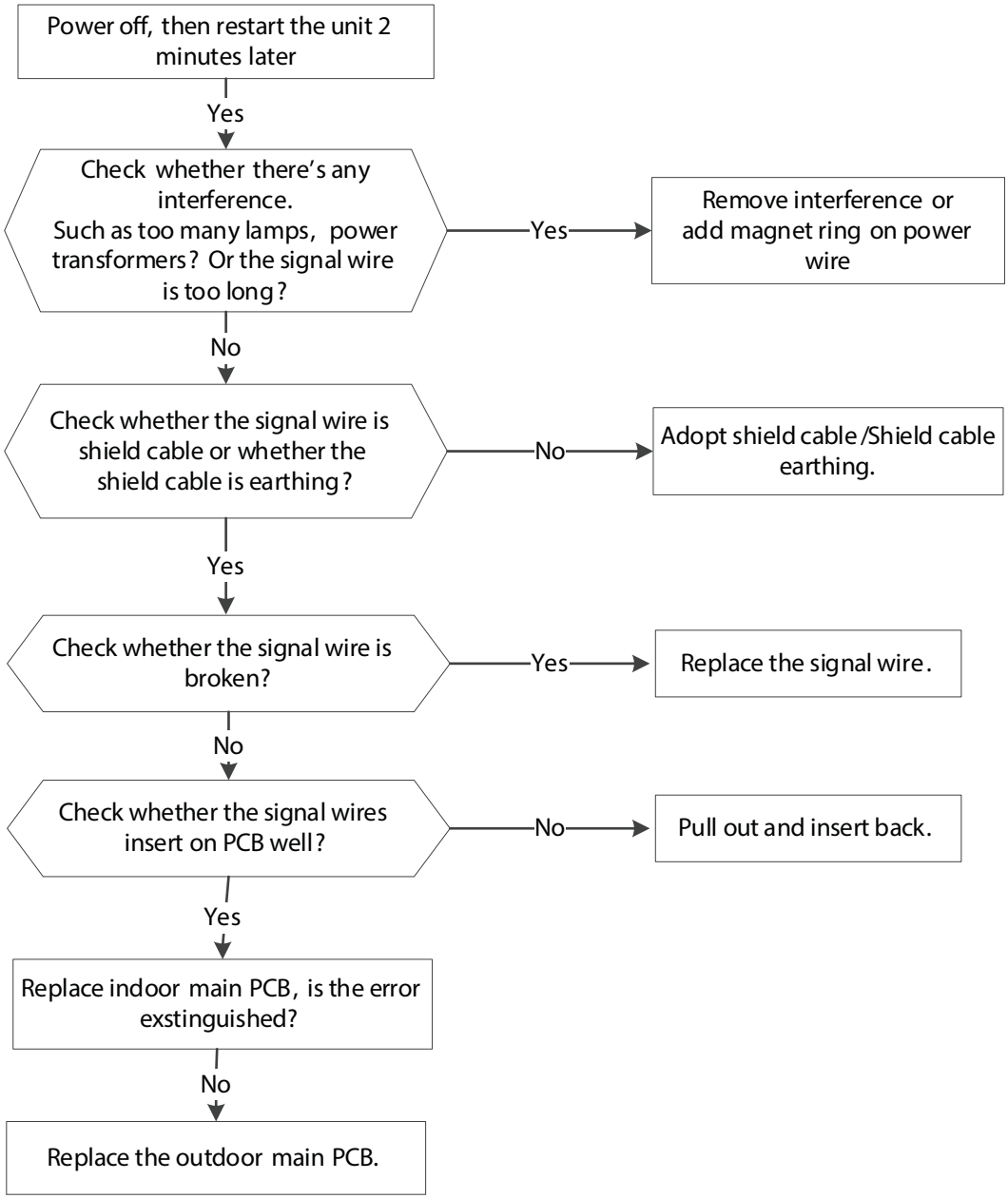

Remarks:

- Use a multimeter to test the DC voltage between the 2 port (or S or L2 port) and 3 port (or N or S port) of the outdoor unit.
- The red pin of multimeter connects with 2 port (or S or L2 port) while the black pin is for 3 port (or N or S port) the unit is running normal, the voltage is moving alternately as positive values and negative values.
- If the outdoor unit malfunctions, the voltage remains in a narrow positive value.
- If the indoor unit malfunctions, the voltage maintains a fixed value.

Manufacturer reserves the right to change, at any time, specifications and designs without notice and without obligations.

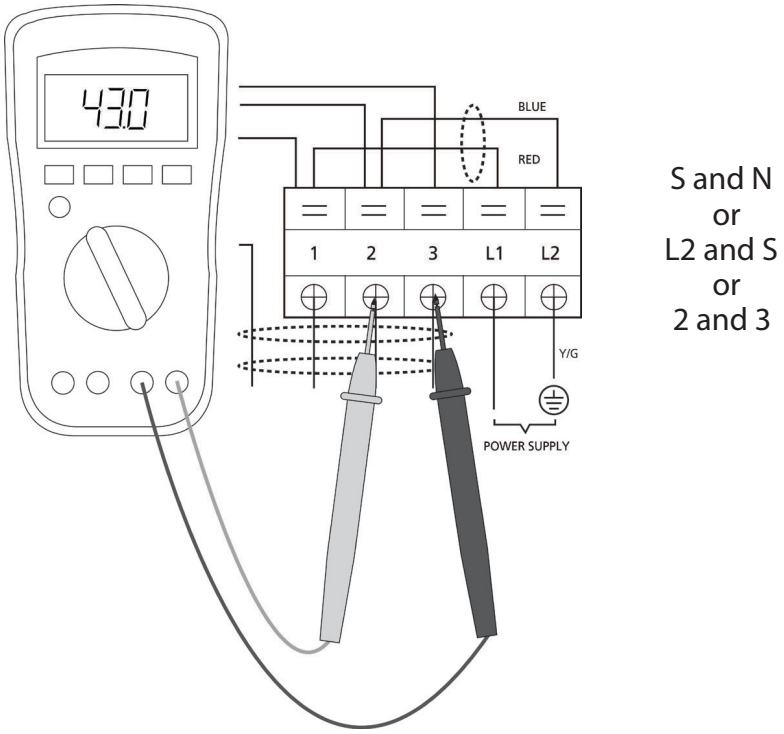

- Use a multimeter to test the reactor's resistance which does not connect with capacitor.
- The normal value should be around zero ohm. Otherwise, the reactor has malfunctioned. Check the reactor and make sure it is not shorted to the ground.

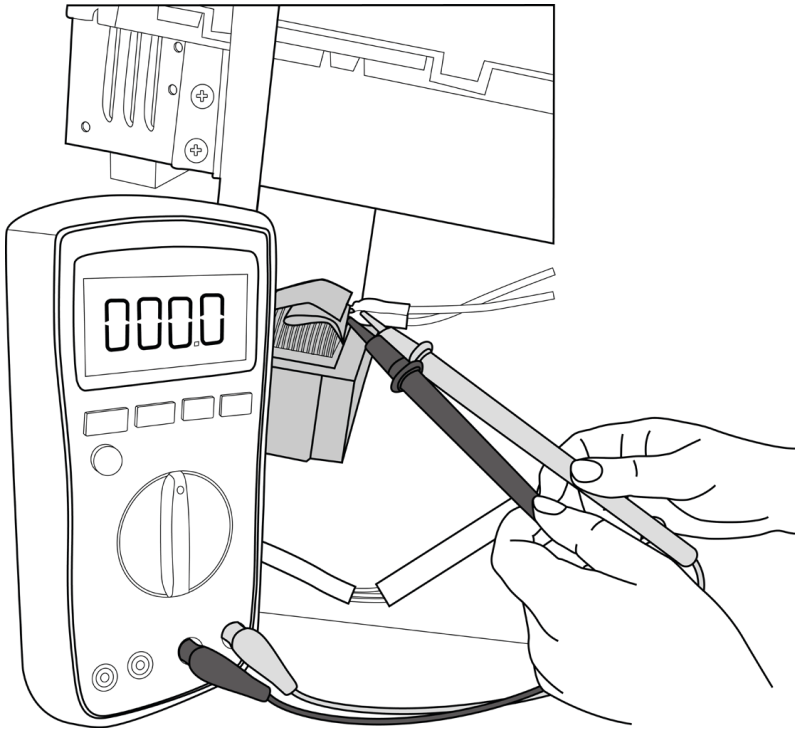

EH03 / EC 07 (Fan Speed Is Operating Outside of Normal Range Diagnosis and Solution)

Description: When indoor / outdoor fan speed keeps too low or too high for a certain time, the LED displays the failure code and the AC turns off.

Recommended parts to prepare: Connection wires, Fan assembly, Fan motor, PCB

Troubleshooting and repair:

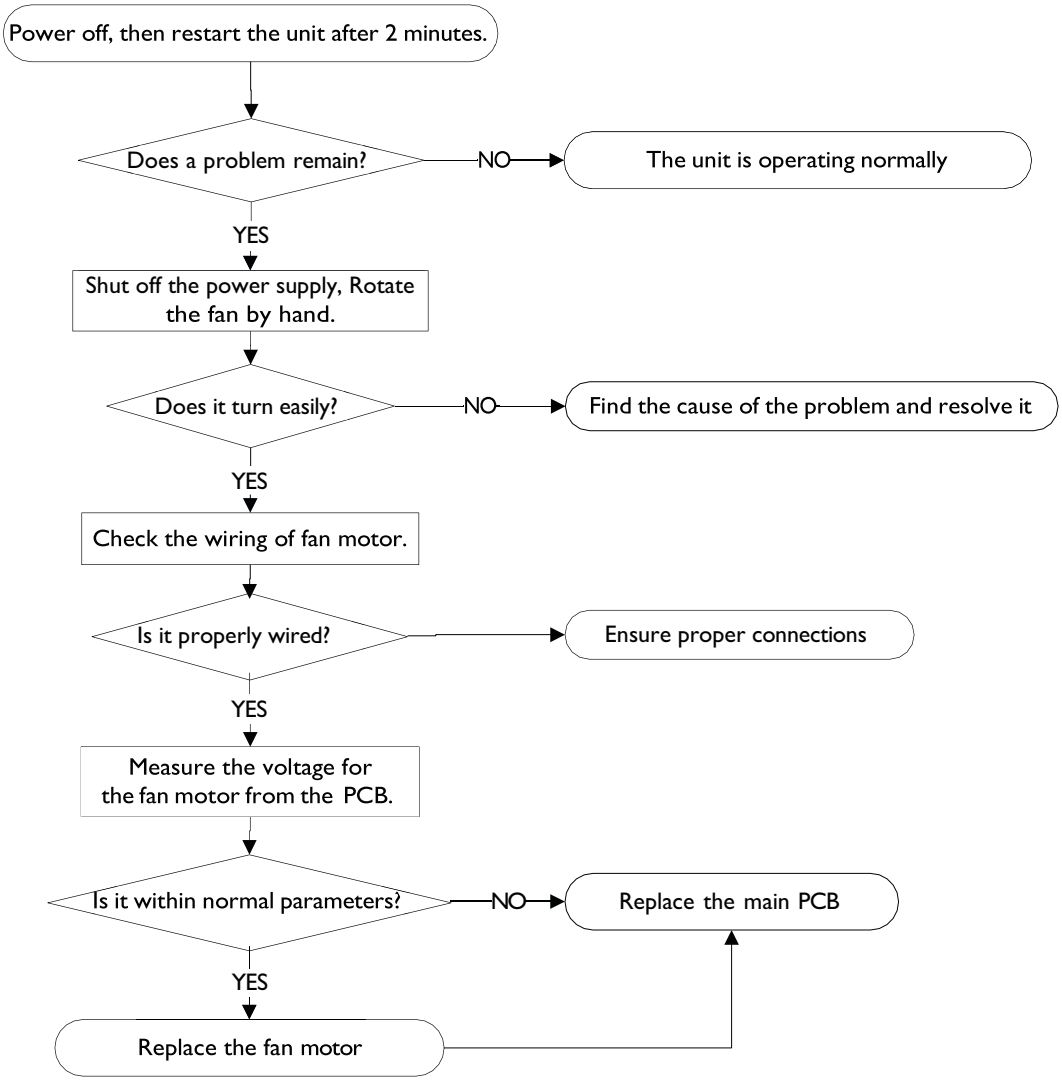

Index

1. Indoor or Outdoor DC Fan Motor (control chip is in fan motor)
   With the power on and when the unit is in standby, measure the voltage of pin1- pin3, pin4- pin3 in the fan motor connector. If the value of the voltage is not in the range shown in below table, the PCB needs to be replaced.

No.	Color	Signal	Voltage
1	Red	Vs/Vm	192V~380V
2	—	—	—
3	Black	GND	0V
4	White	Vcc	13.5-16.5V
5	Yellow	Vsp	0~6.5V
6	Blue	FG	13.5-16.5V

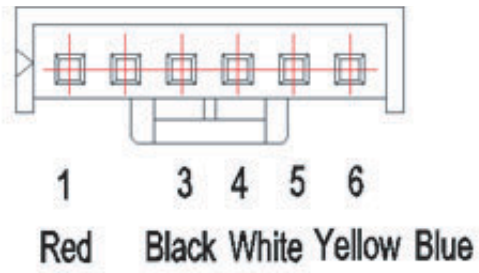

Fig. 24 —Fan Motor Connector, Pin Location

2. Outdoor DC Fan Motor (control chip is in outdoor PCB)
   Release the UVW connector. Measure the resistance of U-V, U-W, V-W. If the resistances are not equal to each other, the fan motor needs to be replaced. Otherwise, the PCB needs to be replaced.

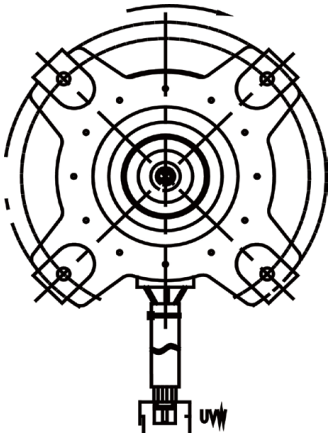

Fig. 25 —UVW Connector

EH 60/ EH 61/ EC 53/ EC 52/ EC 54/ EC 56 (Open Circuit or Short Circuit of Temperature Sensor Diagnosis and Solution)

Description: If the sampling voltage is lower than 0.06V or higher than 4.94V, the LED displays the failure.

Recommended parts to prepare: Connection wires, Sensors, PCB

Troubleshooting and repair:

Refer to Appendix, page 55.

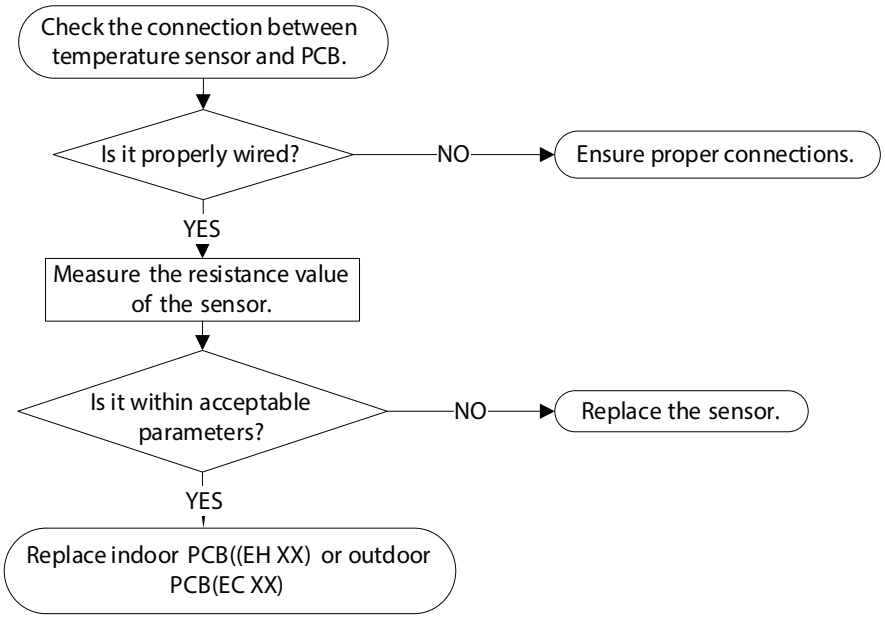

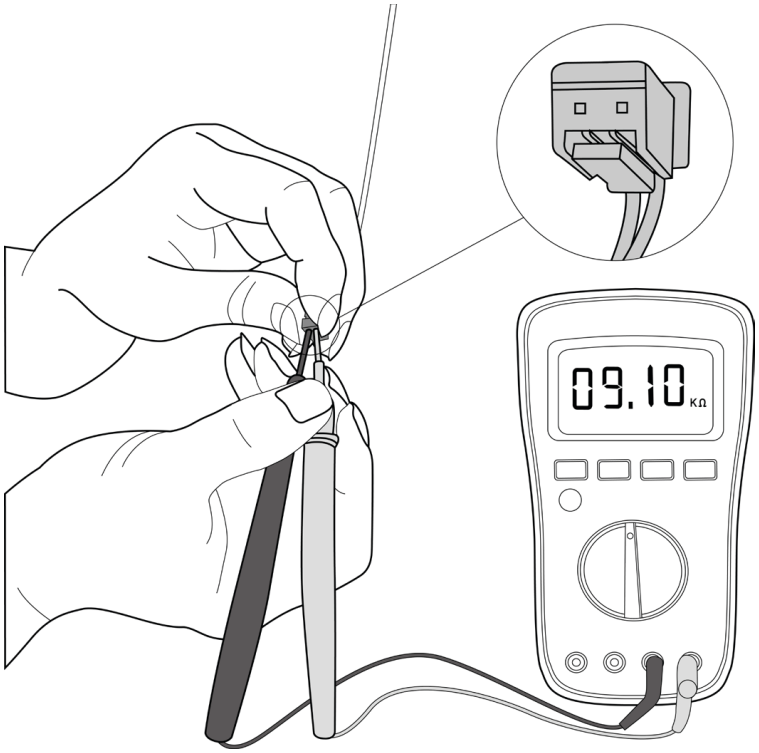

NOTE: This picture and the value are only for reference, actual appearance and value may vary.

EL 0C (System Lacks Refrigerant Diagnosis and Solution)

Description: Judging the abnormality of the refrigeration system according to the number of compressor stops and the changes in operating parameters caused by excessive exhaust temperature.

Recommended parts to prepare: Indoor PCB, Additional refrigerant

Troubleshooting and repair:

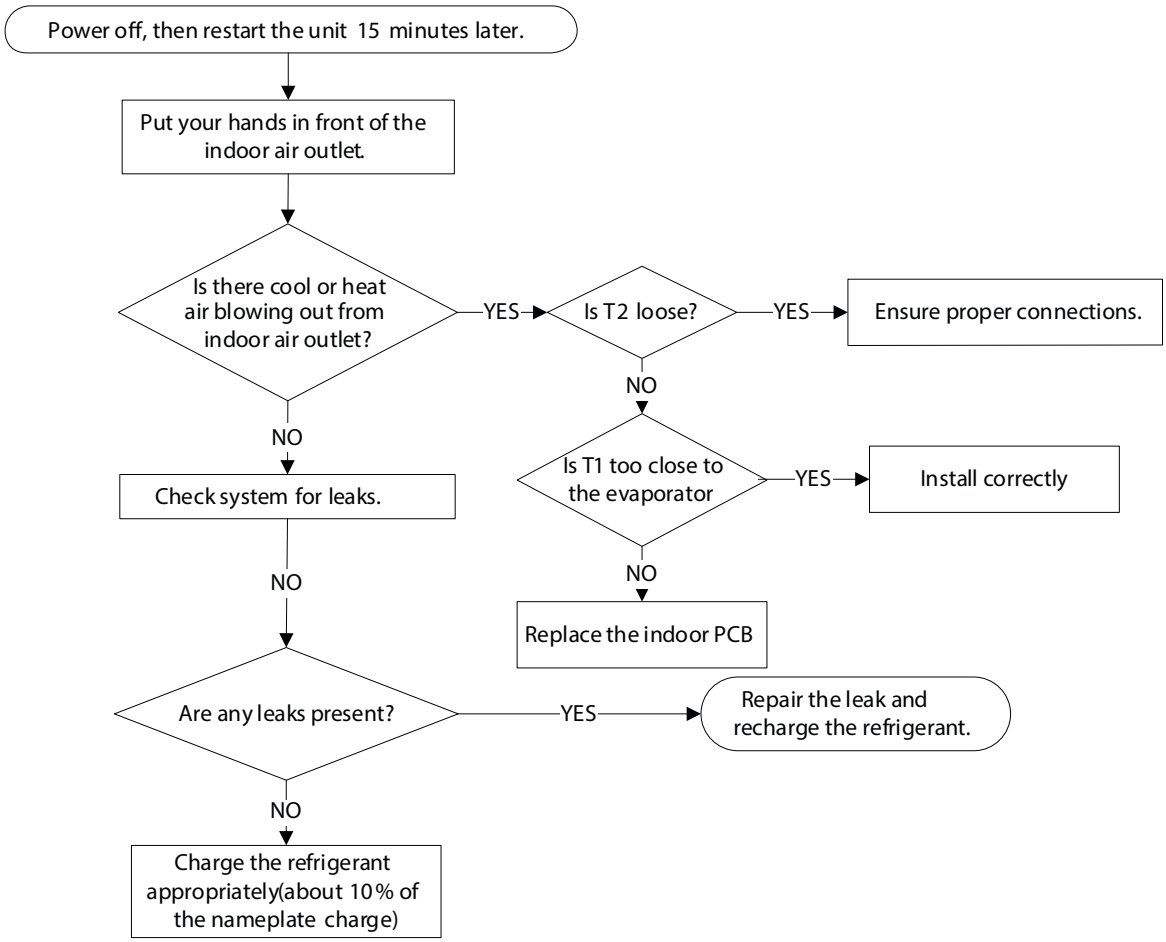

EH 0E (Water-Level Alarm Malfunction Diagnosis and Solution)

Description: If the sampling voltage is not 5V, the LED displays the failure code.

Recommended parts to prepare: Connection wires, Water-level switch, Water pump, Indoor PCB

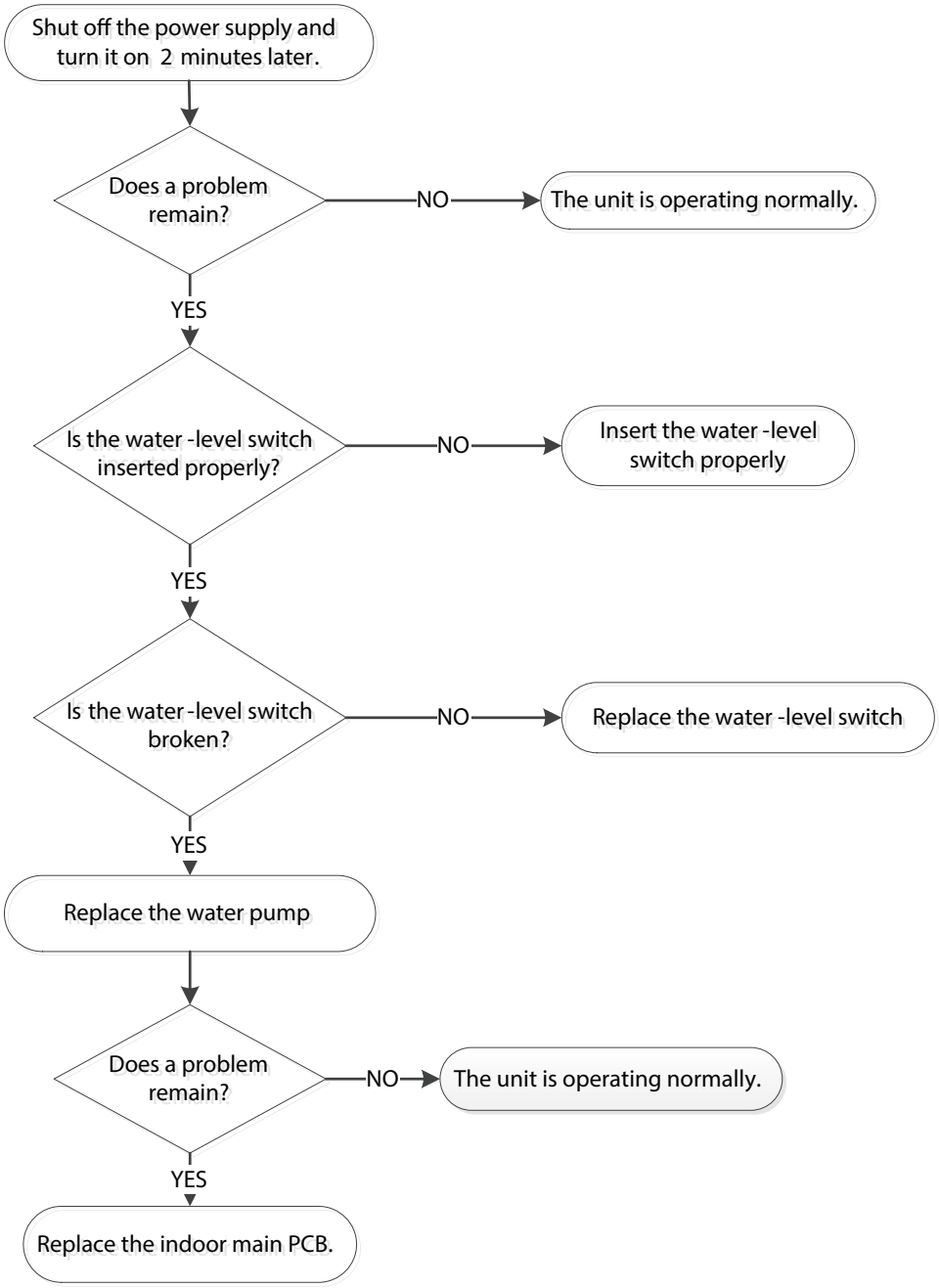

PC 00 (ODU IPM Module Protection Diagnosis and Solution)

Description: When the voltage signal the IPM sends to the compressor drive chip is abnormal, the display LED shows "PC 00" and the AC turn off.

Recommended parts to prepare: Connection wires, IPM module board, Outdoor fan assembly, Compressor, Outdoor PCB

Troubleshooting and repair:

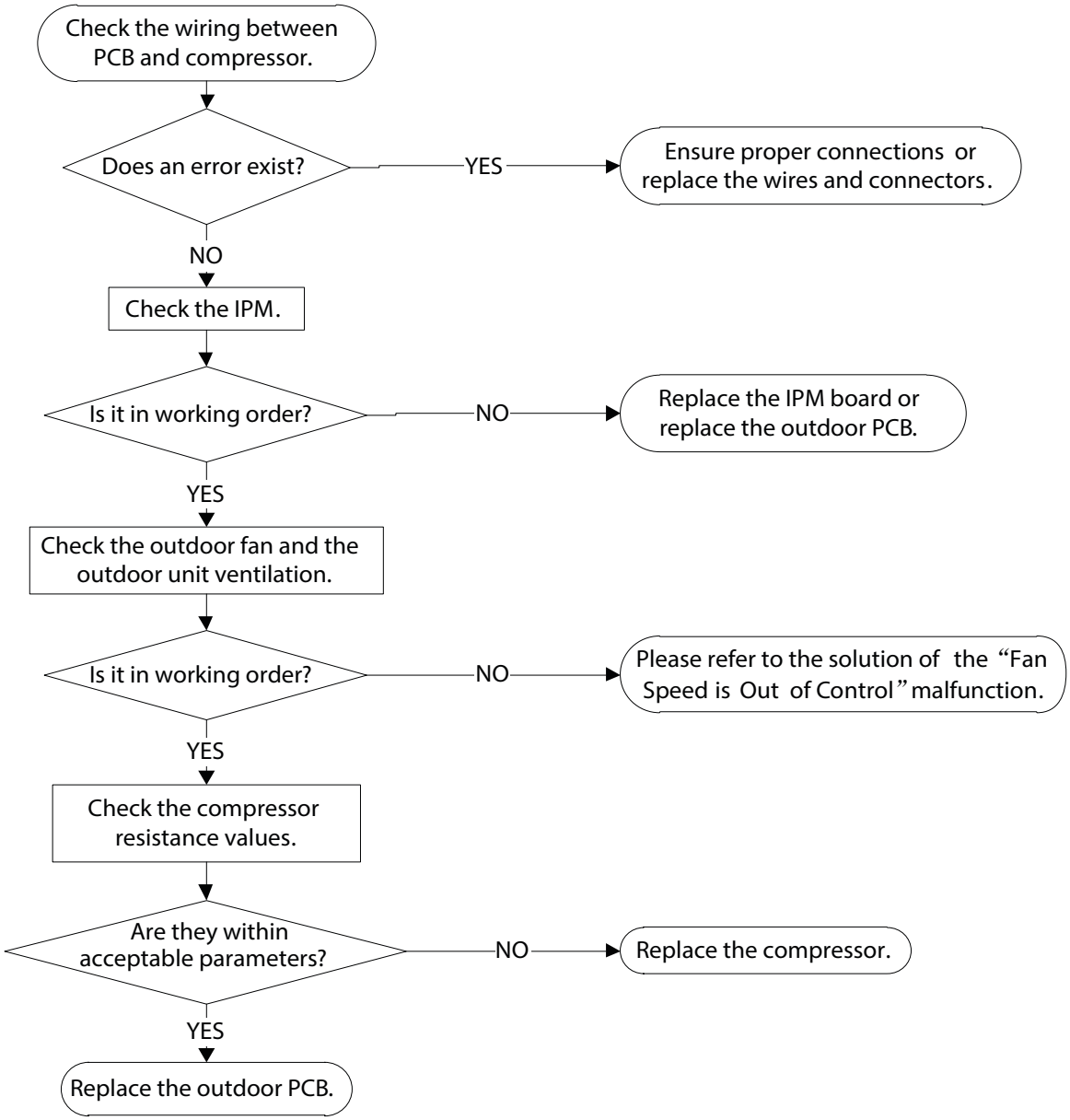

PC 01 (ODU Voltage Protection Diagnosis and Solution)

Description: Abnormal increases or decreases in voltage are detected by checking the specified voltage detection circuit.

Recommended parts to prepare: Power supply wires, IPM module board, PCB, Reactor

Troubleshooting and repair:

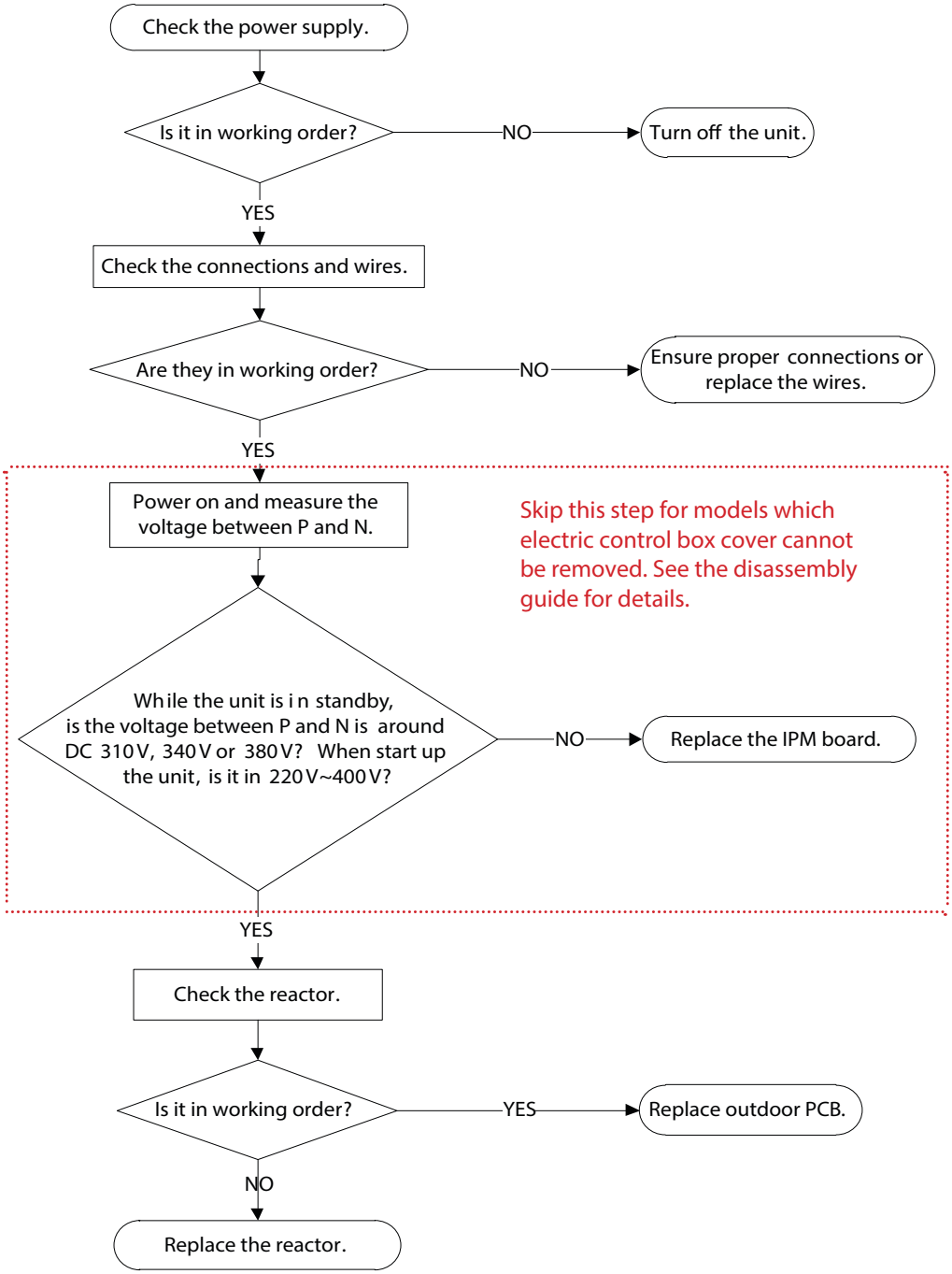

PC 04 (Inverter Compressor Drive Error Diagnosis and Solution)

Description: An abnormal inverter compressor drive is detected by a special detection circuit, including communication signal detection, voltage detection, compressor rotation speed signal detection and so on.

Recommended parts to prepare: Connection wires, IPM module board, Outdoor fan assembly, Compressor, Outdoor PCB

Troubleshooting and repair:

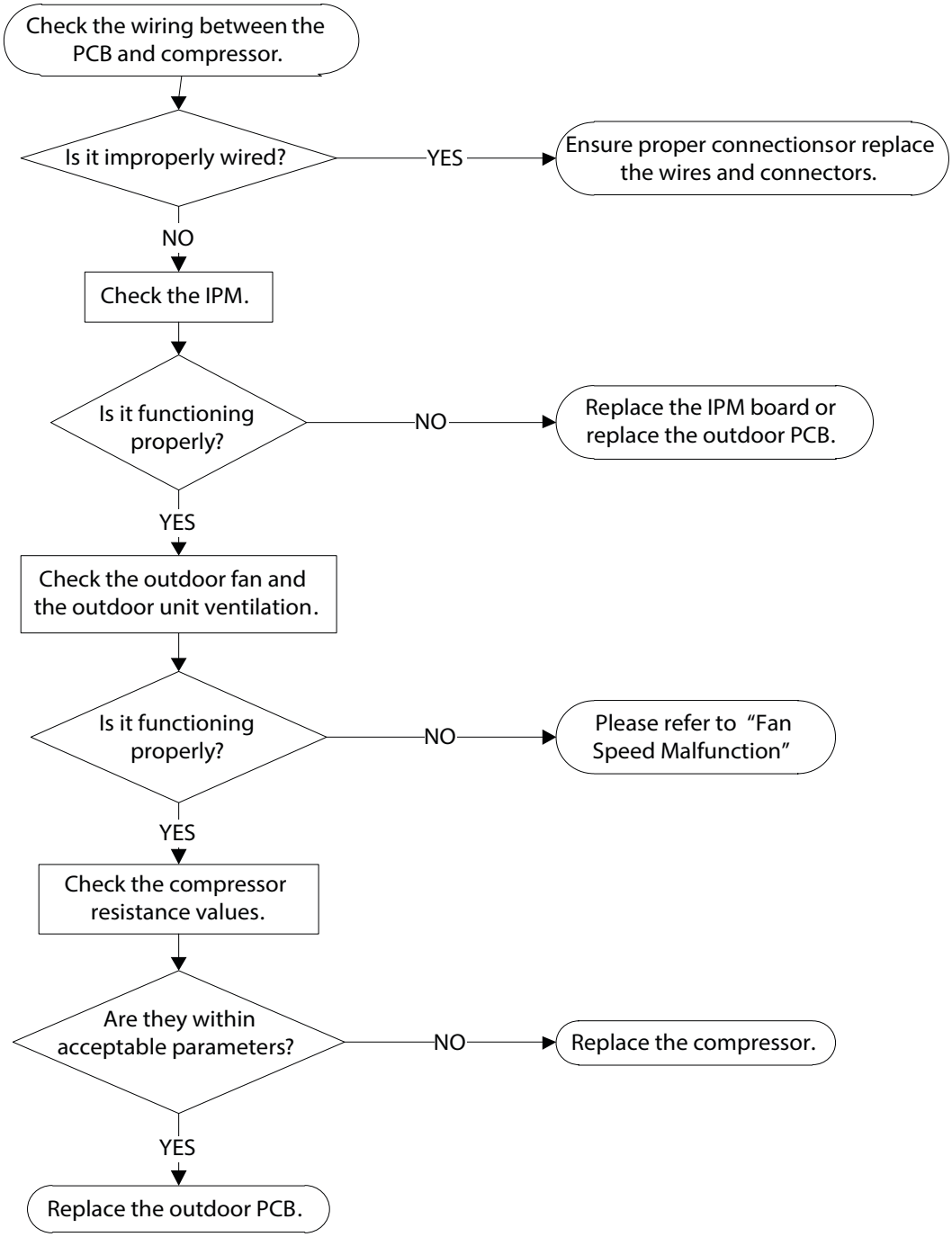

PC 03(Pressure Protection (low or high pressure) Diagnosis and Solution)

Description: Outdoor pressure switch cut off the system because high pressure is higher than 4.4 MPa or outdoor pressure switch cut off the system because low pressure is lower than 0.13 MPa, the LED displays the failure code.

Recommended parts to prepare: Connection wires, Pressure switch, Outdoor fan, Outdoor main PCB, Refrigerant

Troubleshooting and repair:

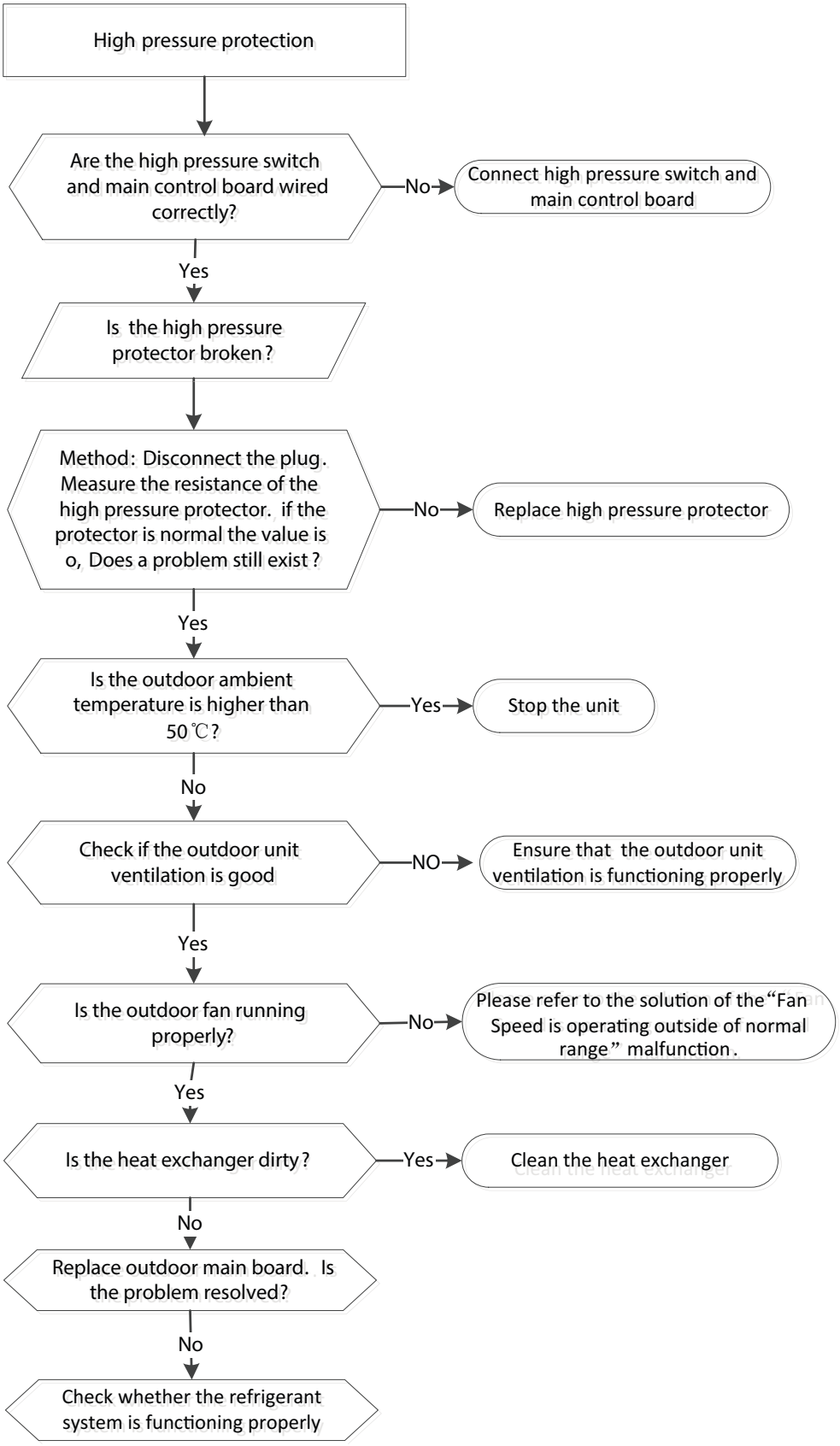

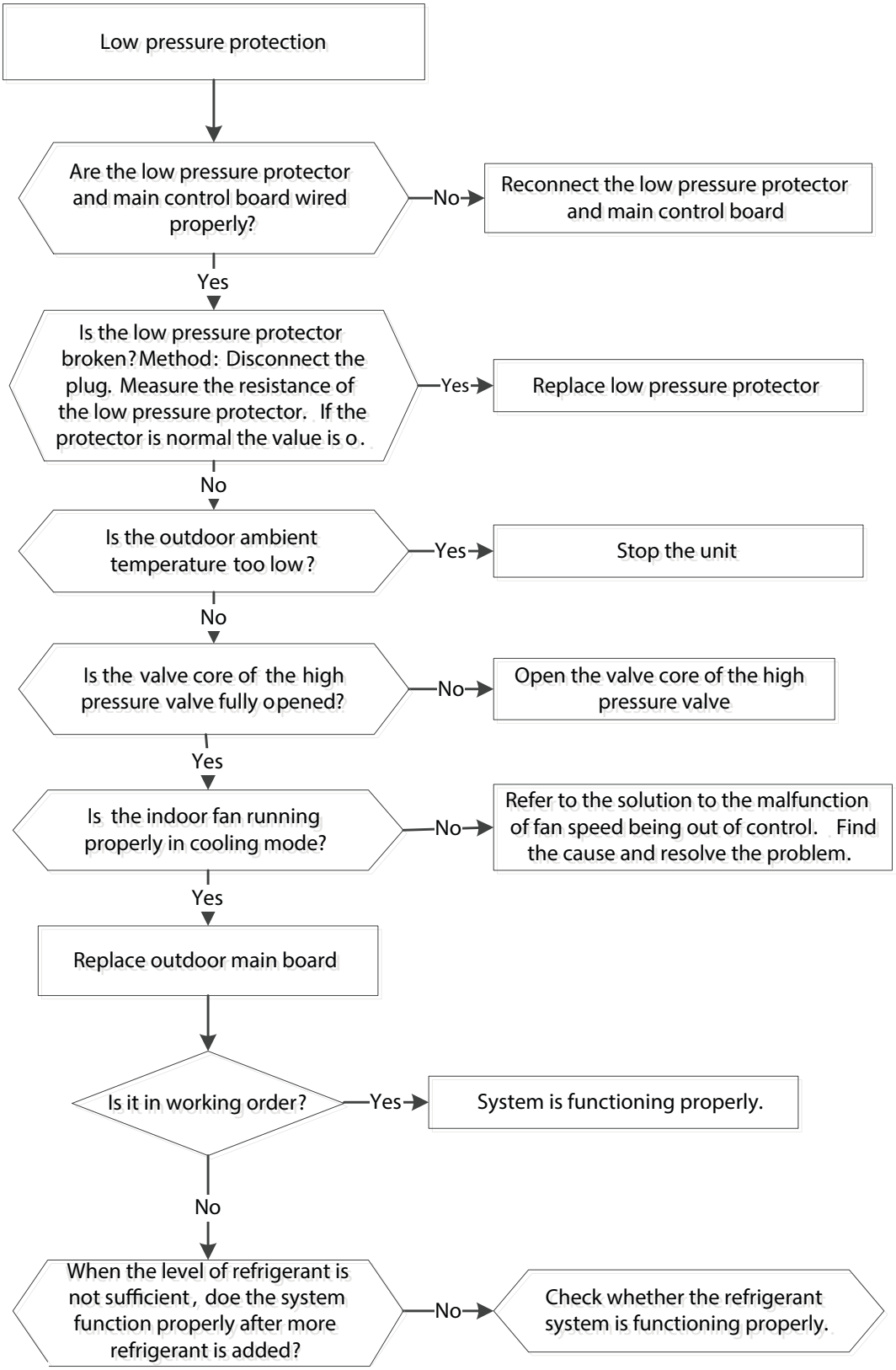
Low pressure protection
Are the low pressure protector and main control board wired properly?
No
Reconnect the low pressure protector and main control board
Yes
Is the low pressure protector broken? Method: Disconnect the plug. Measure the resistance of the low pressure protector. If the protector is normal the value is o.
Yes
Replace low pressure protector
No
Is the outdoor ambient temperature too low?
Yes
Stop the unit
No
Is the valve core of the high pressure valve fully opened?
No
Open the valve core of the high pressure valve
Yes
Is the indoor fan running properly in cooling mode?
No
Refer to the solution to the malfunction of fan speed being out of control. Find the cause and resolve the problem.
Yes
Replace outdoor main board
Is it in working order?
Yes
System is functioning properly.
No
When the level of refrigerant is not sufficient, doe the system function properly after more refrigerant is added?
No
Check whether the refrigerant system is functioning properly.

PC 02 (Compressor Top (or IPM) Temp. Protection Diagnosis and Solution)

Description: **For some models with overload protection, If the sampling voltage is not 5V, the LED will display the failure. If the temperature of IPM module is higher than a certain value, the LED displays the failure code.**

Recommended parts to prepare: Connection wires, Outdoor PCB, IPM module board, High pressure protector, System blockages

Troubleshooting and repair:

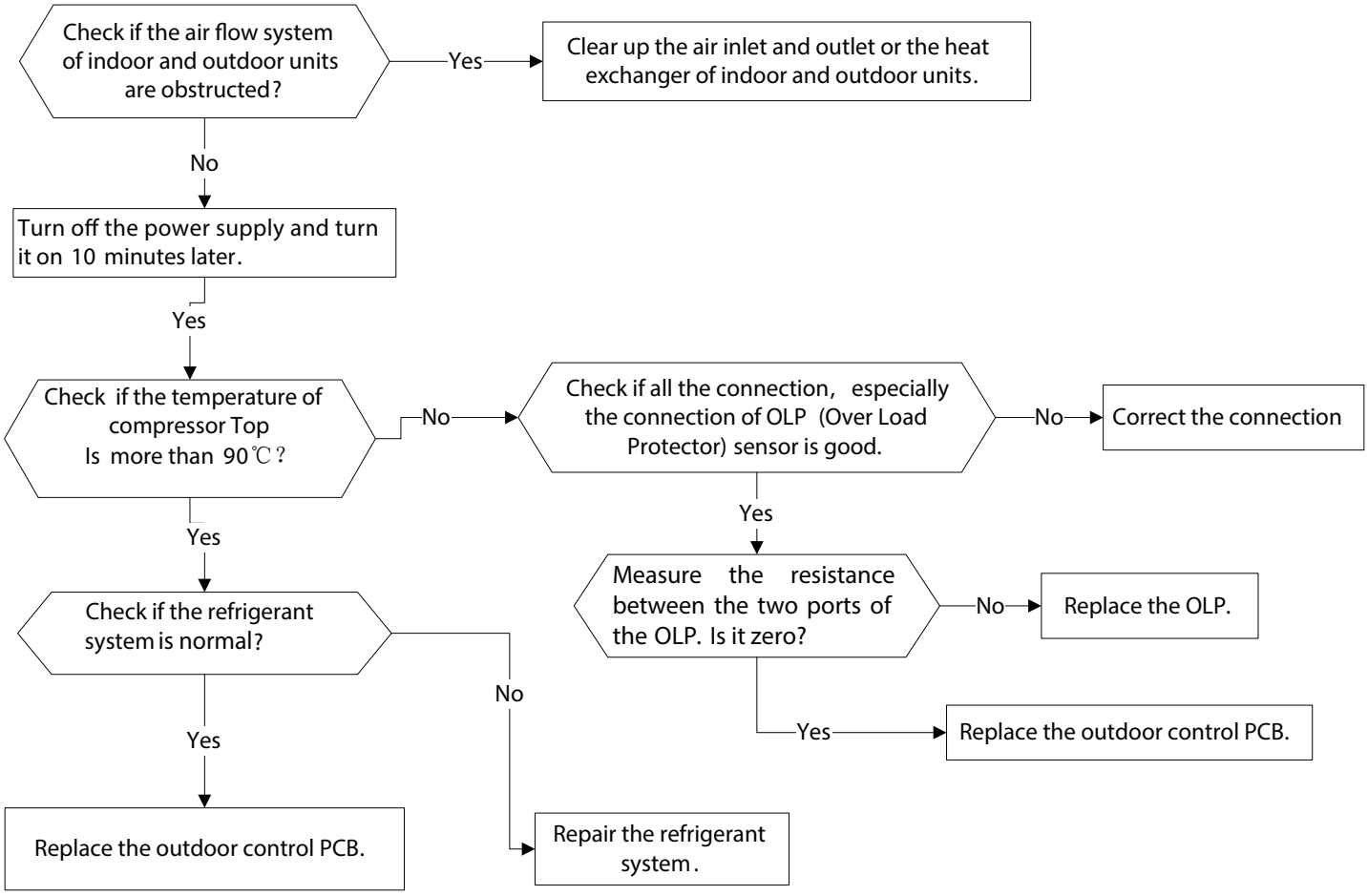

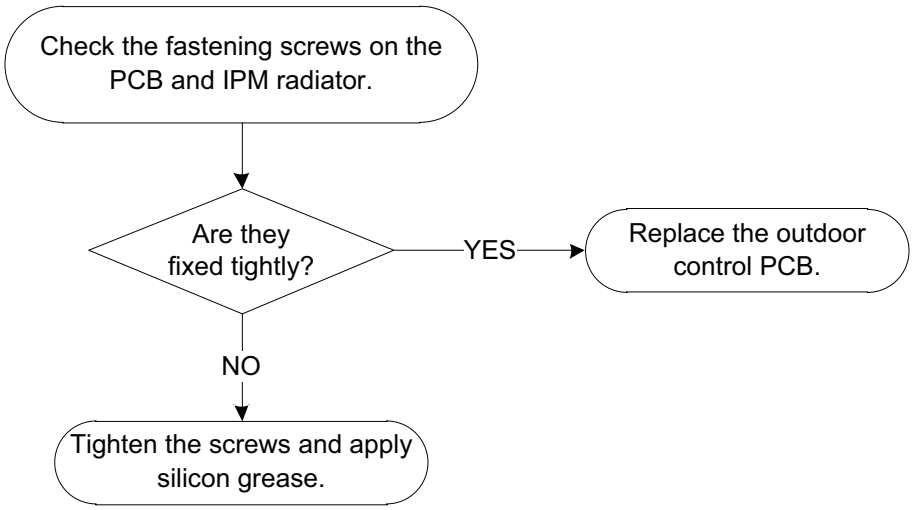

PC 0L (Low Ambient Temperature Protection)

Description: It is a protection function. When compressor is off, outdoor ambient temperature(T4) is lower than -35oC. for 10s, the AC will stop and display the failure code.

When compressor is on, outdoor ambient temperature(T4) is lower than -40oC.for 10s, the AC will stop and display the failure code.

When outdoor ambient temperature(T4) is no lower than -32oC.for 10s, the unit will exit protection

EH b3 (Communication Malfunction Between Wire and Master Control) Diagnosis and Solution

Description: If Indoor PCB does not receive feedback from wired controller, the error displays on the wired controller

Recommended parts to prepare: Connection wires, Indoor PCB, Wired controller

Troubleshooting and repair:

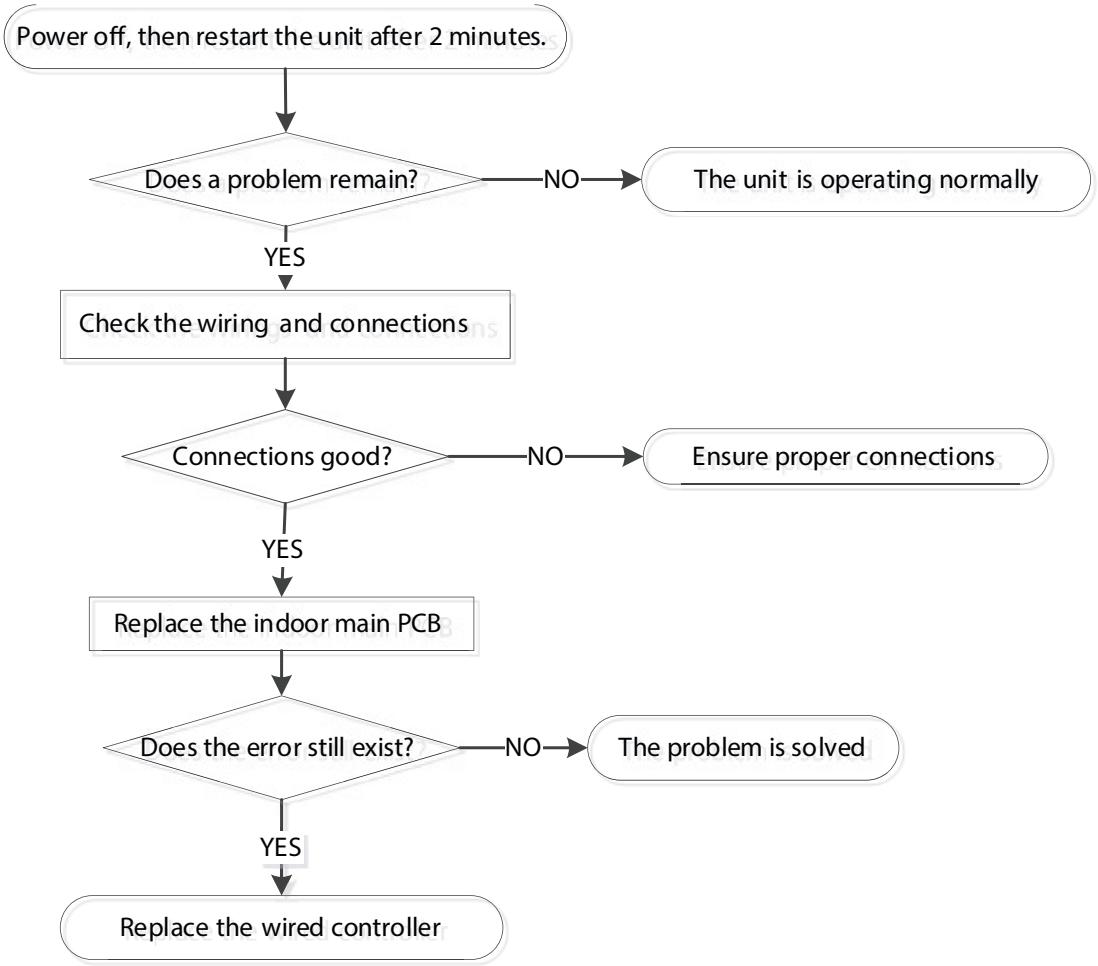

EH bA (Communication Malfunction Between Indoor Unit and External Fan Module)/ EH 3A(External Fan DC Bus Voltage Is Too Low Protection)/ EH 3b (External Fan DC Bus Voltage is Too High) Fault) Diagnosis and Solution

Description: Indoor unit does not receive the feedback from external fan module during 150 seconds. or Indoor unit receives abnormal increases or decreases in voltage from external fan module.

Recommended parts to prepare: Indoor main PCB

Troubleshooting and repair:

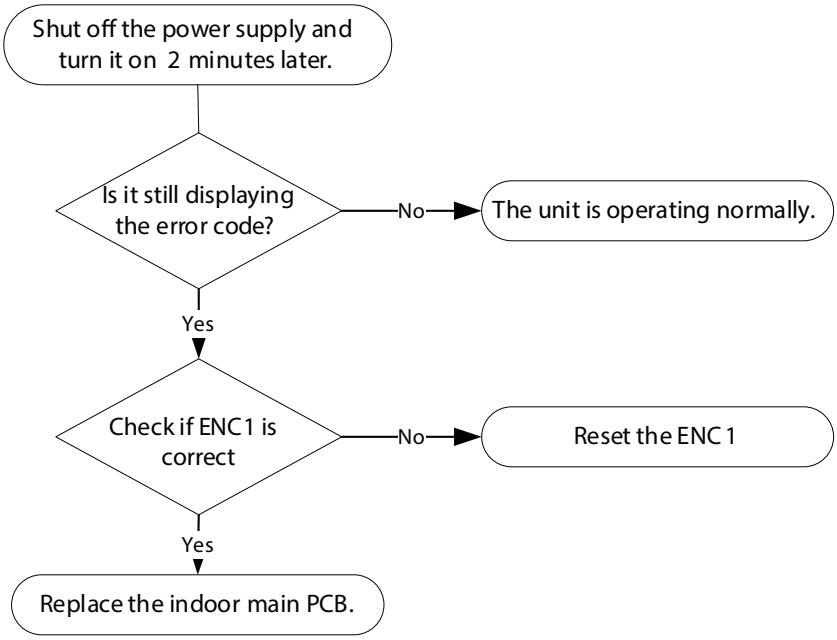

FH CC (Refrigerant Sensor Error) or EH C3(Refrigerant Sensor is Out of Range) Diagnosis and Solution

Description: Indoor unit receives fault signal for 10s or indoor unit does not receive feedback from refrigerant sensor for 150s.

Recommended parts to prepare: Connection wires, Sensors, Indoor main PCB

Troubleshooting and repair:

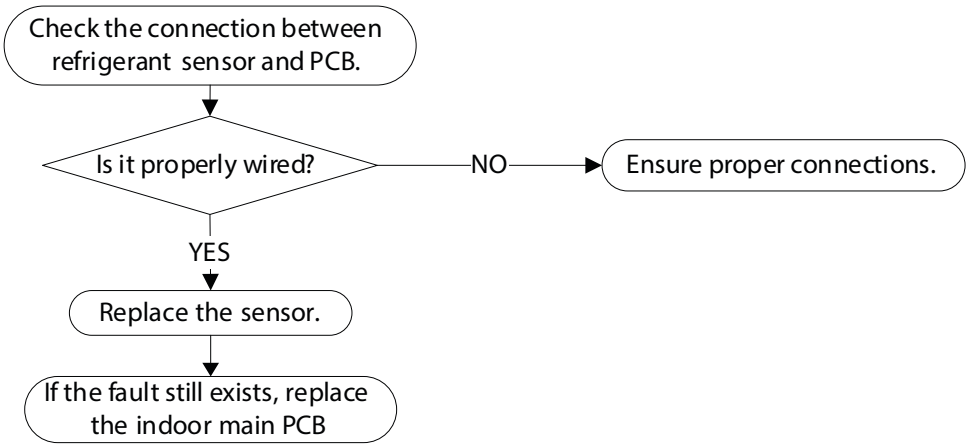

EH C1 (Refrigerant Sensor Detects Leakage) or EH C2 (Refrigerant Sensor is Out of Range and Leakage is Detected) Diagnosis and Solution

Description: The refrigerant sensor detects a concentration higher than or equal to 10%*LFL for 10 seconds or the refrigerant sensor detects a concentration higher than or equal to 20%*LFL or the multi model receives the refrigerant leakage protection fault sent by the outdoor unit.

Multi-zone: Only the buzzer of the indoor unit that detects refrigerant leakage continues to sound the alarm, the shortest sound is 10 seconds, and the longest sound is 5 minutes (you can press any key such as remote control or wire control, APP and so on to eliminate the alarm), and the other non-refrigerant leakage fault indoor unit only displays "ECC1", but the buzzer does not sound.

Recommended parts to prepare: Additional refrigerant

Troubleshooting and repair:

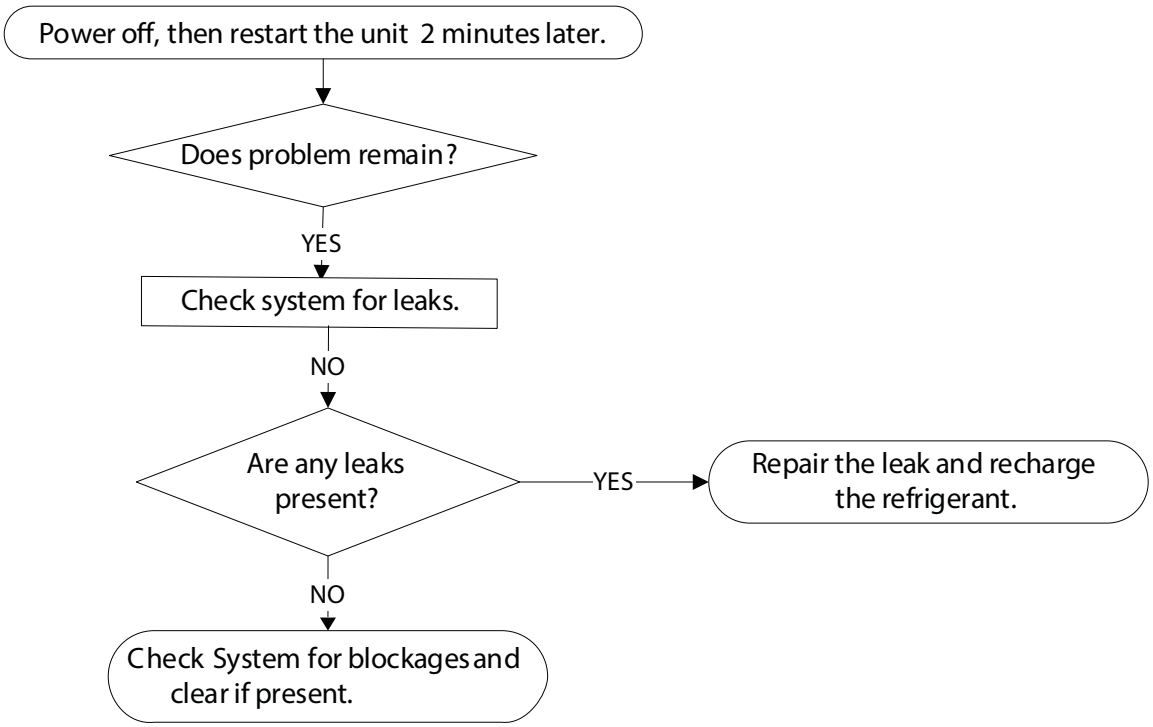

EC 0d (ODU Malfunction Diagnosis and Solution)

Description: The indoor unit detects the outdoor unit in error.

Recommended parts to prepare: Outdoor unit

Troubleshooting and repair:

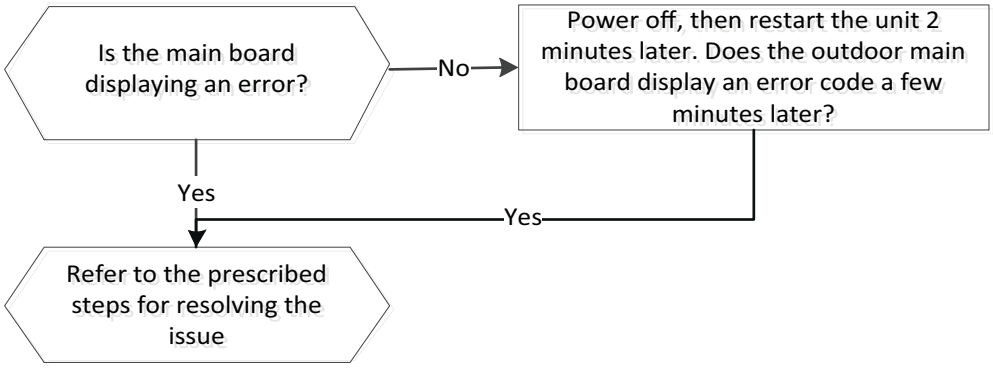

EH 0b(IDU Main Control Board and Display Board Communication Error Diagnosis and Solution)

Description: Indoor PCB does not receive feedback from the display board.

Recommended parts to prepare: Communication wire, Indoor PCB, Display board

Troubleshooting and repair:

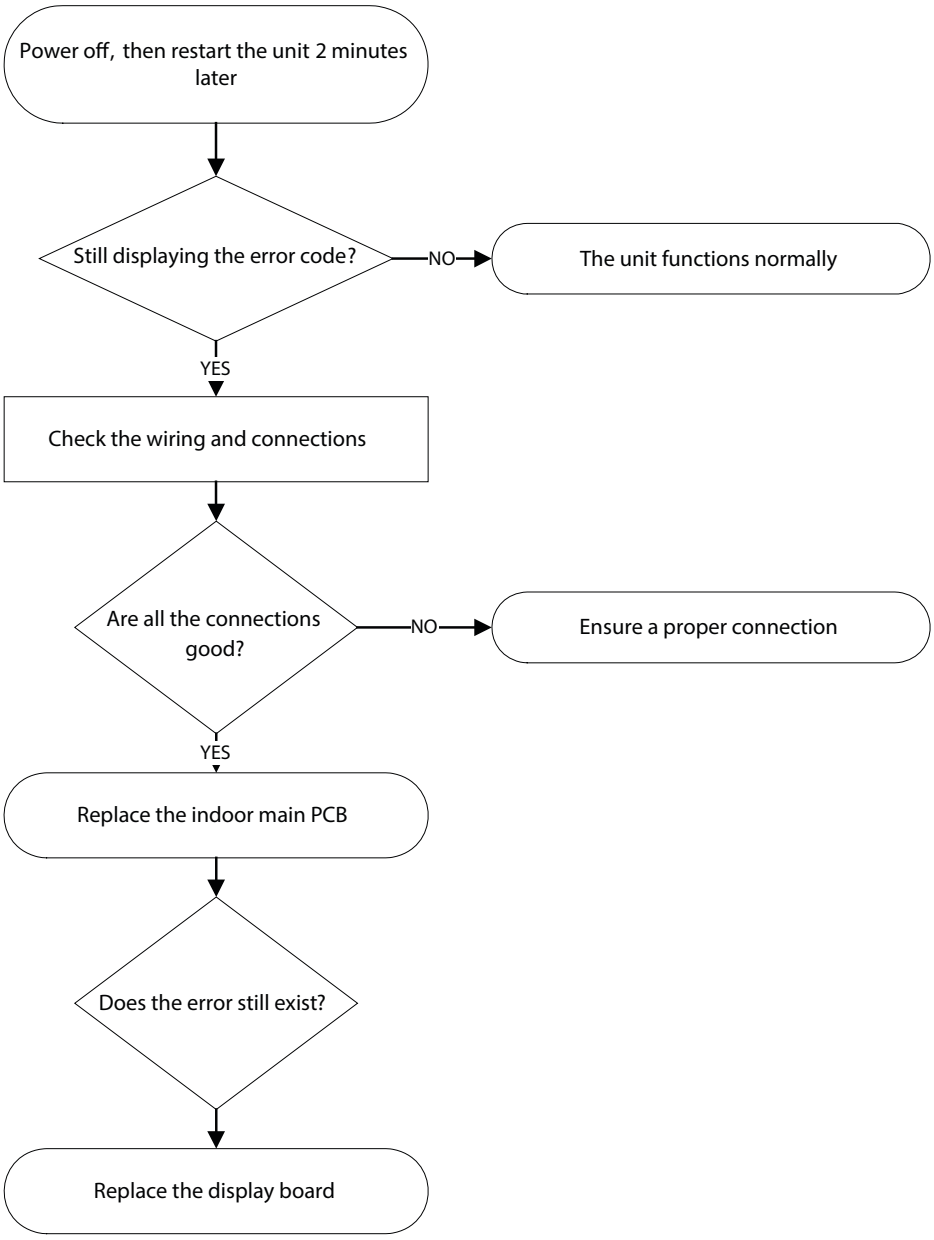

EL 16(Communication Malfunction Between Adapter Board and Outdoor Main Board Diagnosis and Solution)

Description: The adapter PCB cannot detect the main control board.

Recommended parts to prepare: Connection wires, Adapter board, Outdoor main PCB

Troubleshooting and repair:

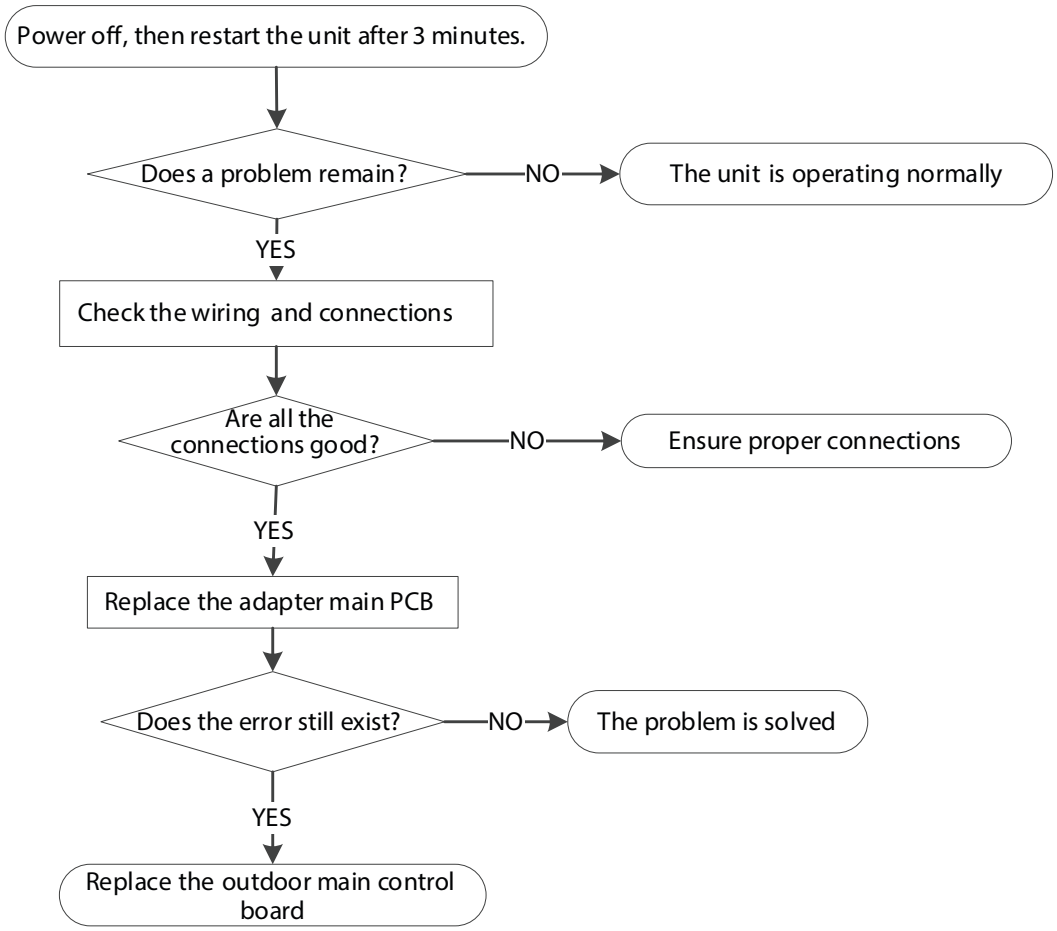

FL 09(Mismatch between the new and old platforms diagnosis and solution)

Description: Indoor and outdoor units are mismatched, the LED displays this code. Please replace the matching indoor or outdoor unit.

DISASSEMBLY INSTRUCTIONS

Electrical Parts (Anti static gloves must be worn.)

PROCEDURES	ILLUSTRATION
1. Remove 2 screws of the upper cover Plate assembly and then remove the it. (see illustration)	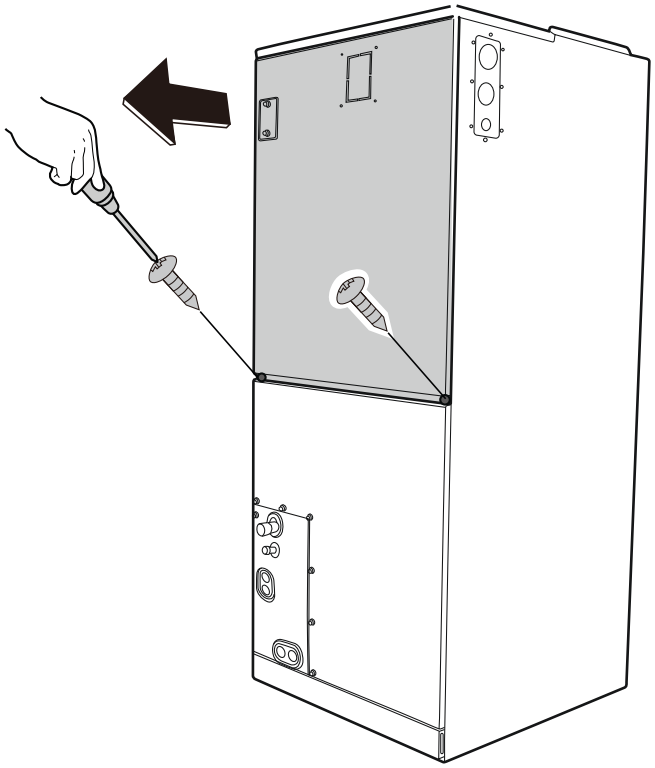
2. Remove 2 screws and unplug the plugs. (see illustration) 3. Pull out the electric control box subassembly.(see illustration)	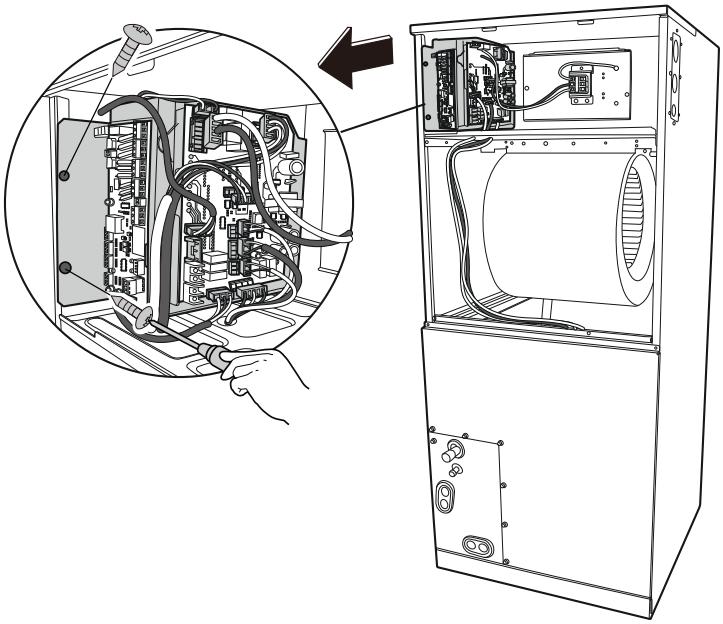

PROCEDURES	ILLUSTRATION
4. Release 2 fixing screws and 1earthing screw.(see illustration) 5. Unplug the plugs and then remove the main control board subassembly. (see illustration)	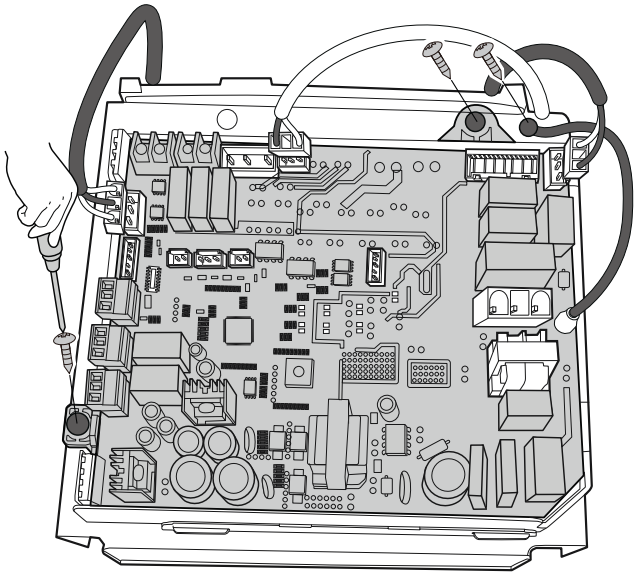
6. Release 1 fixing screw of the data transfer module control board to remove it. (see illustration)	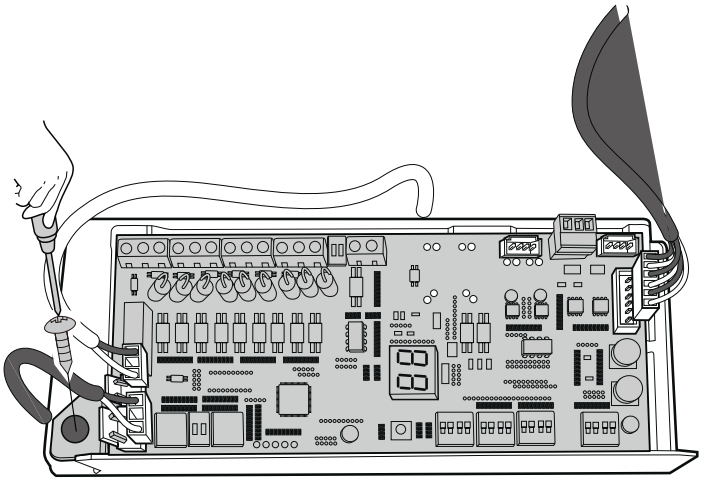

PROCEDURES	ILLUSTRATION
7. Release 2 screws and then remove the transformer. (see illustration)	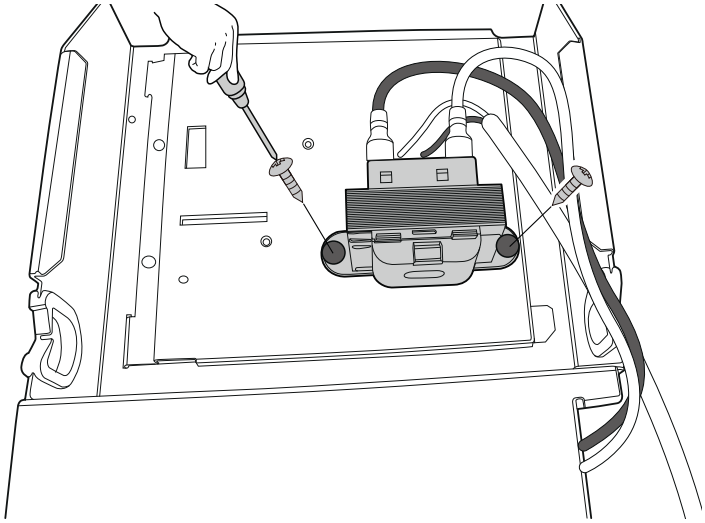

Fan Motor and Fan

PROCEDURES	ILLUSTRATION
1. Remove 2 screws of fan assembly (see illustration)	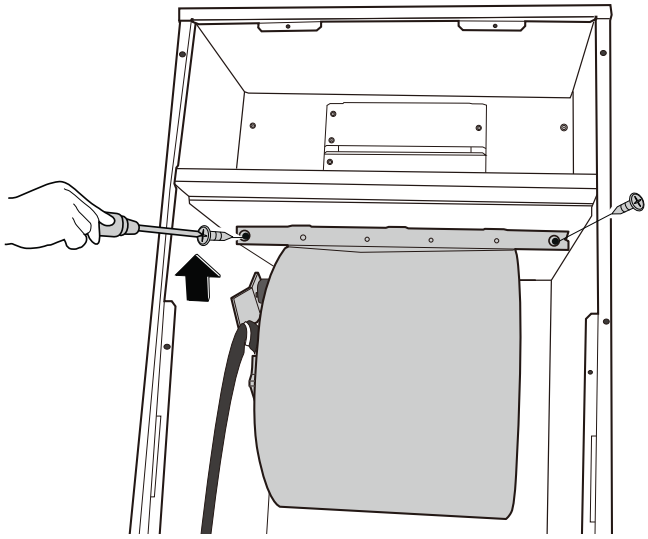
2. Take out the fan assembly (see illustration)	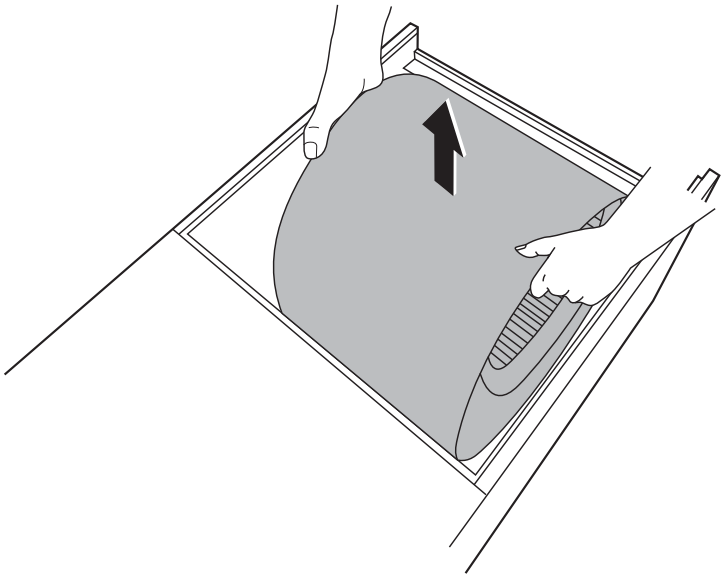

PROCEDURES	ILLUSTRATION
3. Release 3 nuts fixing the fan motor and then take out the fan motor. (see illustration)	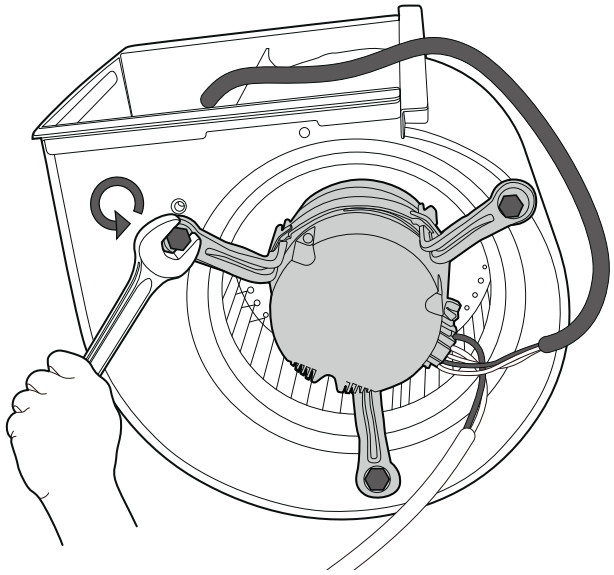
4. Release the 1 nut fixing the fan and then take out the fan. (see illustration)	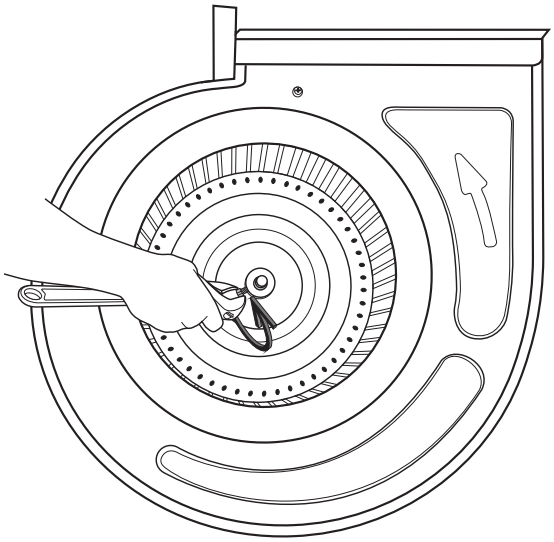

Evaporator

PROCEDURES	ILLUSTRATION
1. Remove the cover plate (see illustration)	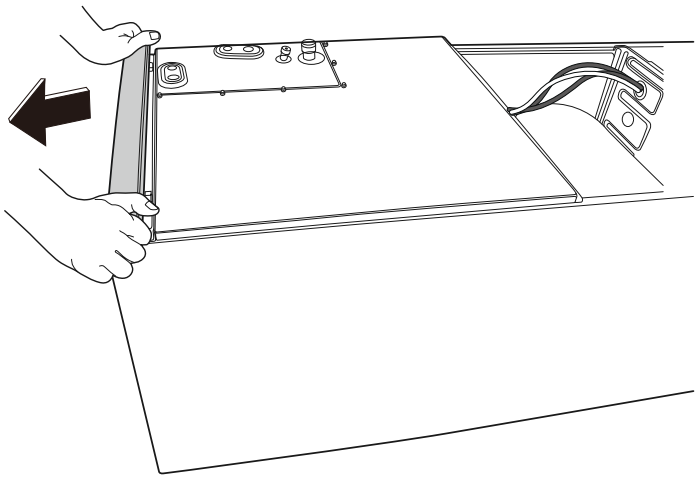
2. Remove 3 screws of cover plate assembly (below) (see illustration)	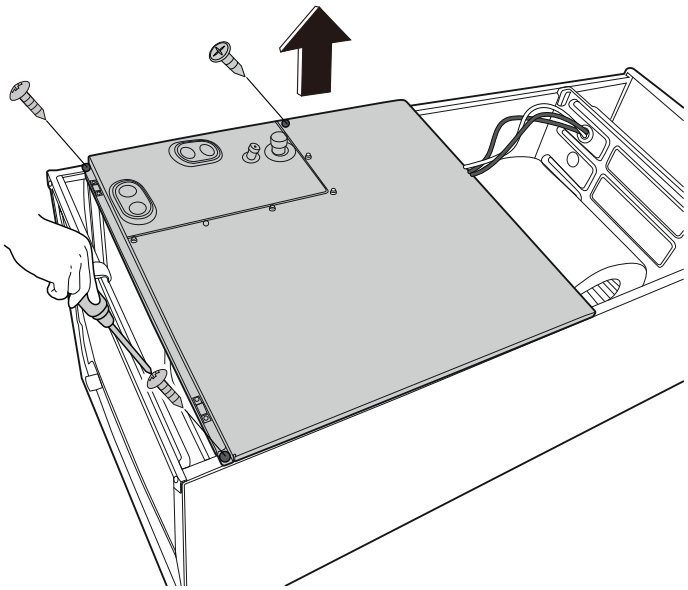

PROCEDURES	ILLUSTRATION
3. Remove 6 screws and remove the pipe clamp. (see illustration)	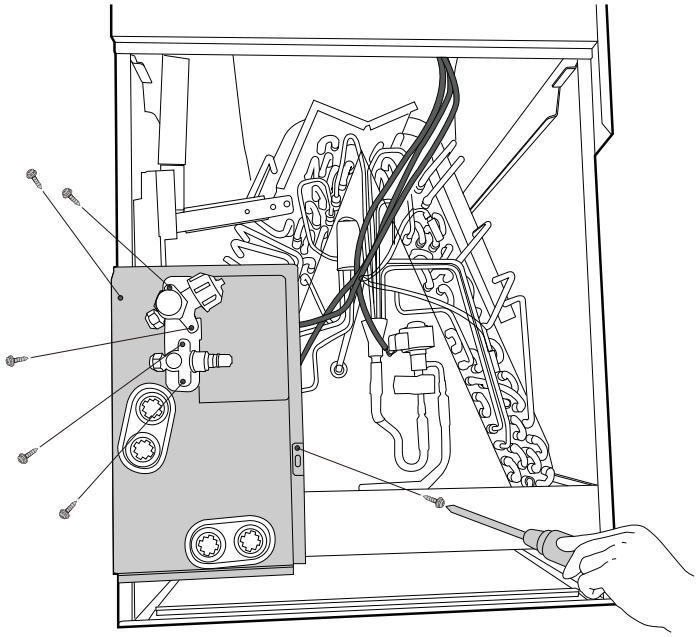
4. Remove 1 screw and remove the refrigerant sensor. (see illustration)	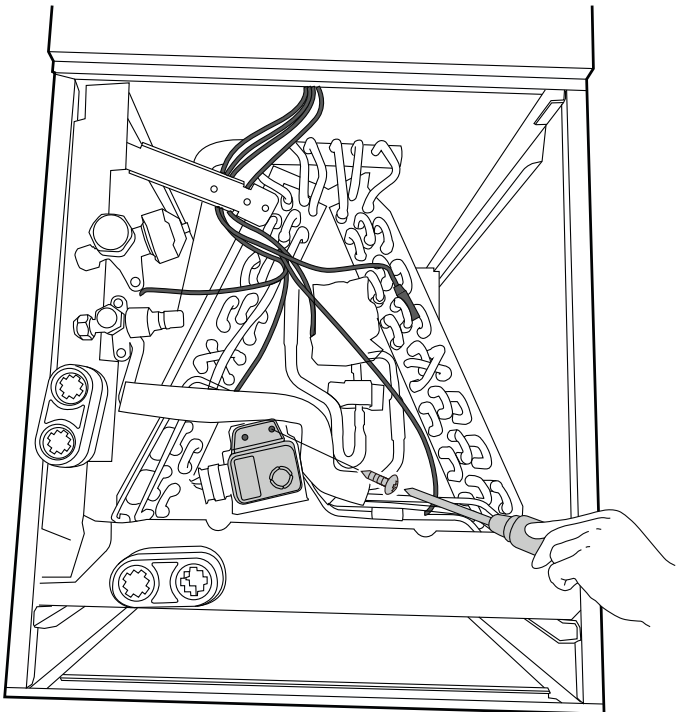

PROCEDURES	ILLUSTRATION
5. Take out the evaporator (with water collector assembly). (see illustration)	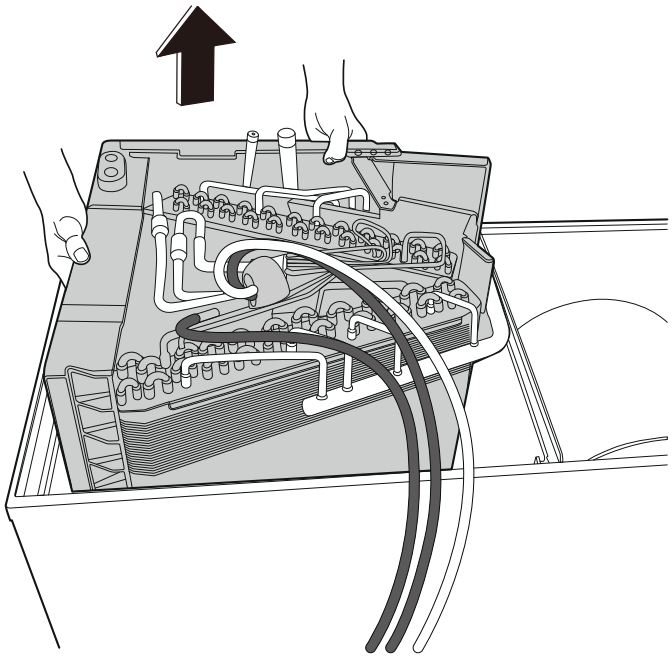
6. Remove 2 screws of water collector assembly. (see illustration) 7. Release evaporator and the water collector assembly.	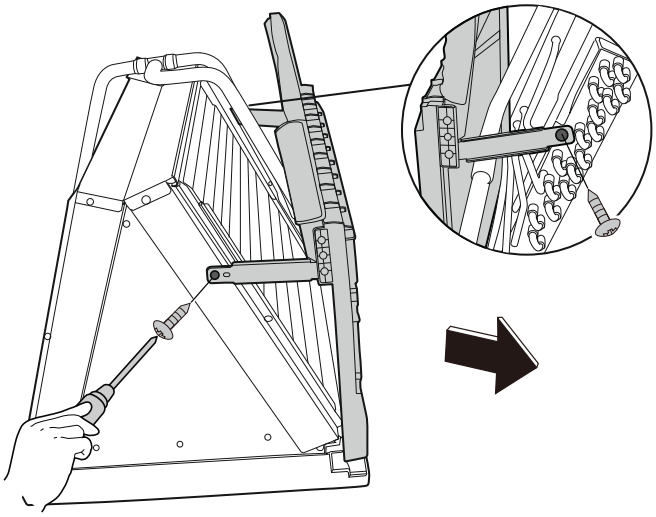

Electric Auxiliary Heat Module (Optional)

PROCEDURES	ILLUSTRATION
1. Remove 2 screws of the upper cover Plate assembly and then remove the it. (see illustration)	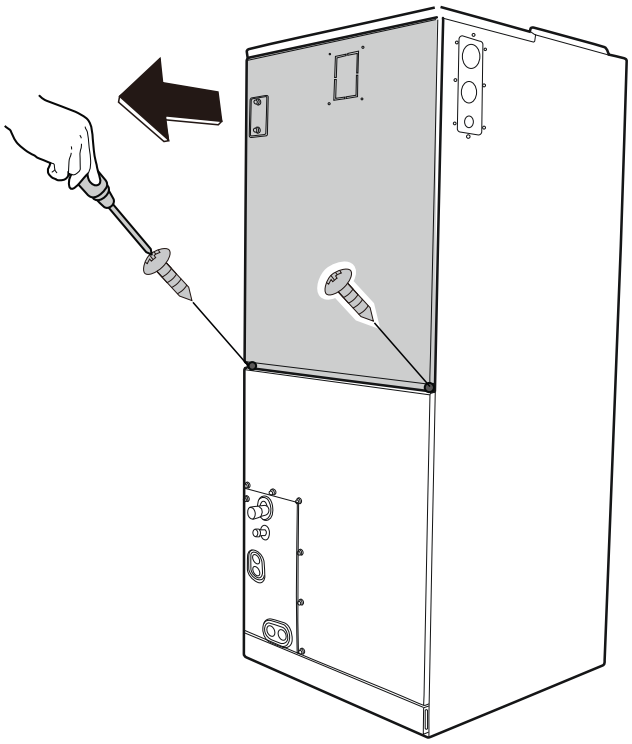
2. Remove 3 fixing screws. (see illustration)	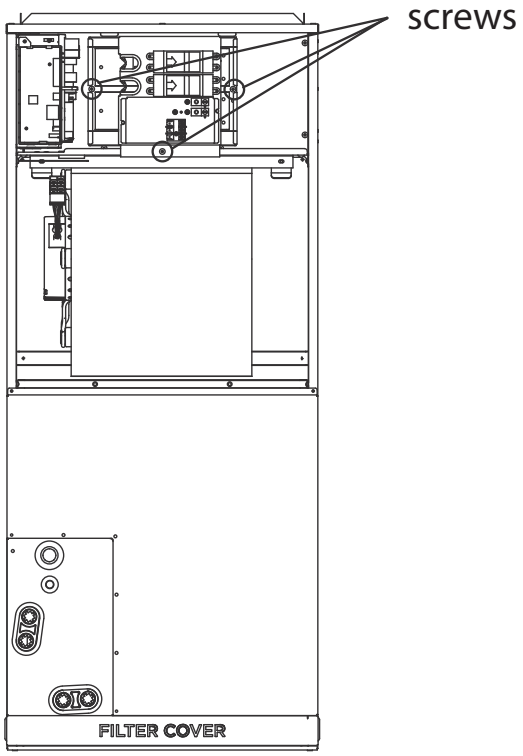

PROCEDURES	ILLUSTRATION
3. Pull out the auxiliary heat module. (see illustration)	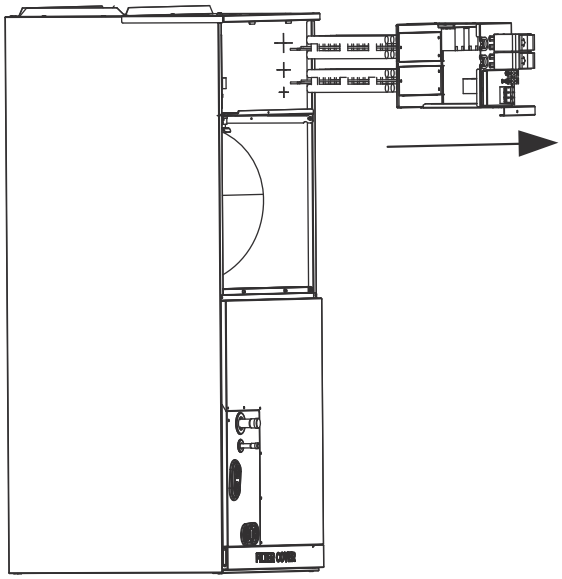
4. Pull out the wire connect to the fuse with needle-nose pliers (see illustration) **NOTE:** Qty of EHKMB-05B is 1, Qty of EHKMB-08B& EHKMB-10B is 2, Qty of EHKMB-15B is 3, Qty of EHKMB-20B is 4, Qty of EHKMB-25B is 5.	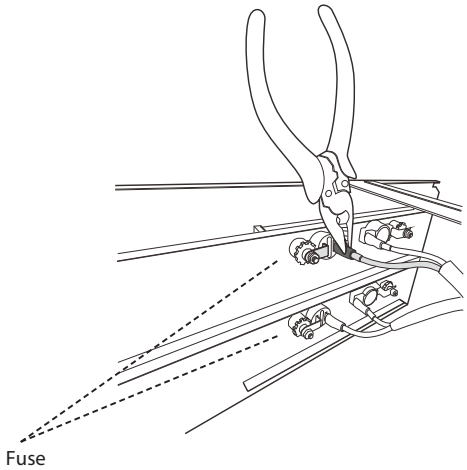
5. Loosen the retaining nut, and then remove the fuse. (see illustration)	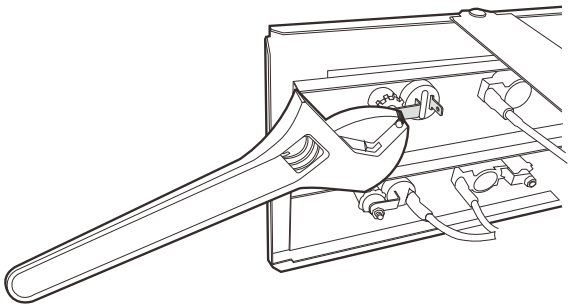

APPENDIX

Temperature Sensor Resistance Value Table for TP (°C - K)

°C	°F	K Ohm	°C	°F	K Ohm	°C	°F	K Ohm	°C	°F	K Ohm
-20	-4	542.7	20	68	68.66	60	140	13.59	100	212	3.702
-19	-2	511.9	21	70	65.62	61	142	13.11	101	214	3.595
-18	0	483	22	72	62.73	62	144	12.65	102	216	3.492
-17	1	455.9	23	73	59.98	63	145	12.21	103	217	3.392
-16	3	430.5	24	75	57.37	64	147	11.79	104	219	3.296
-15	5	406.7	25	77	54.89	65	149	11.38	105	221	3.203
-14	7	384.3	26	79	52.53	66	151	10.99	106	223	3.113
-13	9	363.3	27	81	50.28	67	153	10.61	107	225	3.025
-12	10	343.6	28	82	48.14	68	154	10.25	108	226	2.941
-11	12	325.1	29	84	46.11	69	156	9.902	109	228	2.86
-10	14	307.7	30	86	44.17	70	158	9.569	110	230	2.781
-9	16	291.3	31	88	42.33	71	160	9.248	111	232	2.704
-8	18	275.9	32	90	40.57	72	162	8.94	112	234	2.63
-7	19	261.4	33	91	38.89	73	163	8.643	113	235	2.559
-6	21	247.8	34	93	37.3	74	165	8.358	114	237	2.489
-5	23	234.9	35	95	35.78	75	167	8.084	115	239	2.422
-4	25	222.8	36	97	34.32	76	169	7.82	116	241	2.357
-3	27	211.4	37	99	32.94	77	171	7.566	117	243	2.294
-2	28	200.7	38	100	31.62	78	172	7.321	118	244	2.233
-1	30	190.5	39	102	30.36	79	174	7.086	119	246	2.174
0	32	180.9	40	104	29.15	80	176	6.859	120	248	2.117
1	34	171.9	41	106	28	81	178	6.641	121	250	2.061
2	36	163.3	42	108	26.9	82	180	6.43	122	252	2.007
3	37	155.2	43	109	25.86	83	181	6.228	123	253	1.955
4	39	147.6	44	111	24.85	84	183	6.033	124	255	1.905
5	41	140.4	45	113	23.89	85	185	5.844	125	257	1.856
6	43	133.5	46	115	22.89	86	187	5.663	126	259	1.808
7	45	127.1	47	117	22.1	87	189	5.488	127	261	1.762
8	46	121	48	118	21.26	88	190	5.32	128	262	1.717
9	48	115.2	49	120	20.46	89	192	5.157	129	264	1.674
10	50	109.8	50	122	19.69	90	194	5	130	266	1.632
11	52	104.6	51	124	18.96	91	196	4.849	?	?	?
12	54	99.69	52	126	18.26	92	198	4.703	?	?	?
13	55	95.05	53	127	17.58	93	199	4.562	?	?	?
14	57	90.66	54	129	16.94	94	201	4.426	?	?	?
15	59	86.49	55	131	16.32	95	203	4.294	?	?	?
16	61	82.54	56	133	15.73	96	205	4.167	?	?	?
17	63	78.79	57	135	15.16	97	207	4.045	?	?	?
18	64	75.24	58	136	14.62	98	208	3.927	?	?	?
19	66	71.86	59	138	14.09	99	210	3.812	?	?	?

Manufacturer reserves the right to change, at any time, specifications and designs without notice and without obligations.

Other Temperature Sensors Resistance Value Table (°C - K)

°C	°F	K Ohm	°C	°F	K Ohm	°C	°F	K Ohm	°C	°F	K Ohm
-20	-4	115.266	20	68	12.6431	60	140	2.35774	100	212	0.62973
-19	-2	108.146	21	70	12.0561	61	142	2.27249	101	214	0.61148
-18	0	101.517	22	72	11.5	62	144	2.19073	102	216	0.59386
-17	1	96.3423	23	73	10.9731	63	145	2.11241	103	217	0.57683
-16	3	89.5865	24	75	10.4736	64	147	2.03732	104	219	0.56038
-15	5	84.219	25	77	10	65	149	1.96532	105	221	0.54448
-14	7	79.311	26	79	9.55074	66	151	1.89627	106	223	0.52912
-13	9	74.536	27	81	9.12445	67	153	1.83003	107	225	0.51426
-12	10	70.1698	28	82	8.71983	68	154	1.76647	108	226	0.49989
-11	12	66.0898	29	84	8.33566	69	156	1.70547	109	228	0.486
-10	14	62.2756	30	86	7.97078	70	158	1.64691	110	230	0.47256
-9	16	58.7079	31	88	7.62411	71	160	1.59068	111	232	0.45957
-8	18	56.3694	32	90	7.29464	72	162	1.53668	112	234	0.44699
-7	19	52.2438	33	91	6.98142	73	163	1.48481	113	235	0.43482
-6	21	49.3161	34	93	6.68355	74	165	1.43498	114	237	0.42304
-5	23	46.5725	35	95	6.40021	75	167	1.38703	115	239	0.41164
-4	25	44	36	97	6.13059	76	169	1.34105	116	241	0.4006
-3	27	41.5878	37	99	5.87359	77	171	1.29078	117	243	0.38991
-2	28	39.8239	38	100	5.62961	78	172	1.25423	118	244	0.37956
-1	30	37.1988	39	102	5.39689	79	174	1.2133	119	246	0.36954
0	32	35.2024	40	104	5.17519	80	176	1.17393	120	248	0.35982
1	34	33.3269	41	106	4.96392	81	178	1.13604	121	250	0.35042
2	36	31.5635	42	108	4.76253	82	180	1.09958	122	252	0.3413
3	37	29.9058	43	109	4.5705	83	181	1.06448	123	253	0.33246
4	39	28.3459	44	111	4.38736	84	183	1.03069	124	255	0.3239
5	41	26.8778	45	113	4.21263	85	185	0.99815	125	257	0.31559
6	43	25.4954	46	115	4.04589	86	187	0.96681	126	259	0.30754
7	45	24.1932	47	117	3.88673	87	189	0.93662	127	261	0.29974
8	46	22.5662	48	118	3.73476	88	190	0.90753	128	262	0.29216
9	48	21.8094	49	120	3.58962	89	192	0.8795	129	264	0.28482
10	50	20.7184	50	122	3.45097	90	194	0.85248	130	266	0.2777
11	52	19.6891	51	124	3.31847	91	196	0.82643	131	268	0.27078
12	54	18.7177	52	126	3.19183	92	198	0.80132	132	270	0.26408
13	55	17.8005	53	127	3.07075	93	199	0.77709	133	271	0.25757
14	57	16.9341	54	129	2.95896	94	201	0.75373	134	273	0.25125
15	59	16.1156	55	131	2.84421	95	203	0.73119	135	275	0.24512
16	61	15.3418	56	133	2.73823	96	205	0.70944	136	277	0.23916
17	63	14.6181	57	135	2.63682	97	207	0.68844	137	279	0.23338
18	64	13.918	58	136	2.53973	98	208	0.66818	138	280	0.22776
19	66	13.2631	59	138	2.44677	99	210	0.64862	139	282	0.22231

Manufacturer reserves the right to change, at any time, specifications and designs without notice and without obligations.

System Pressure Table-R454B

Pressure			Temperature		Pressure			Temperature	
Kpa	bar	PSI	°C	°F	Kpa	bar	PSI	°C	°F
58.196	0.58	8.44	-60	-76	935.23	9.35	135.64	8	46.4
61.517	0.62	8.92	-59	-74.2	963.75	9.64	139.78	9	48.2
64.988	0.65	9.43	-58	-72.4	992.93	9.93	144.01	10	50
68.615	0.69	9.95	-57	-70.6	1022.8	10.23	148.34	11	51.8
72.402	0.72	10.50	-56	-68.8	1053.3	10.53	152.76	12	53.6
76.354	0.76	11.07	-55	-67	1084.5	10.85	157.29	13	55.4
80.478	0.80	11.67	-54	-65.2	1116.4	11.16	161.91	14	57.2
84.776	0.85	12.30	-53	-63.4	1149	11.49	166.64	15	59
89.256	0.89	12.95	-52	-61.6	1182.3	11.82	171.47	16	60.8
93.923	0.94	13.62	-51	-59.8	1216.3	12.16	176.40	17	62.6
98.781	0.99	14.33	-50	-58	1251.1	12.51	181.45	18	64.4
103.84	1.04	15.06	-49	-56.2	1286.6	12.87	186.60	19	66.2
109.1	1.09	15.82	-48	-54.4	1322.8	13.23	191.85	20	68
114.56	1.15	16.61	-47	-52.6	1359.9	13.60	197.23	21	69.8
120.25	1.20	17.44	-46	-50.8	1397.7	13.98	202.71	22	71.6
126.15	1.26	18.30	-45	-49	1436.3	14.36	208.31	23	73.4
132.28	1.32	19.18	-44	-47.2	1475.7	14.76	214.02	24	75.2
138.64	1.39	20.11	-43	-45.4	1515.9	15.16	219.85	25	77
145.24	1.45	21.06	-42	-43.6	1557	15.57	225.82	26	78.8
152.09	1.52	22.06	-41	-41.8	1598.9	15.99	231.89	27	80.6
159.18	1.59	23.09	-40	-40	1641.6	16.42	238.09	28	82.4
166.54	1.67	24.15	-39	-38.2	1685.2	16.85	244.41	29	84.2
174.15	1.74	25.26	-38	-36.4	1729.7	17.30	250.86	30	86
182.04	1.82	26.40	-37	-34.6	1775	17.75	257.43	31	87.8
190.2	1.90	27.59	-36	-32.8	1821.3	18.21	264.15	32	89.6
198.65	1.99	28.81	-35	-31	1868.4	18.68	270.98	33	91.4
207.39	2.07	30.08	-34	-29.2	1916.5	19.17	277.95	34	93.2
216.42	2.16	31.39	-33	-27.4	1965.6	19.66	285.08	35	95
225.76	2.26	32.74	-32	-25.6	2015.5	20.16	292.31	36	96.8
235.41	2.35	34.14	-31	-23.8	2066.5	20.67	299.71	37	98.6
245.37	2.45	35.59	-30	-22	2118.4	21.18	307.24	38	100.4
255.67	2.56	37.08	-29	-20.2	2171.3	21.71	314.91	39	102.2
266.29	2.66	38.62	-28	-18.4	2225.2	22.25	322.73	40	104
277.25	2.77	40.21	-27	-16.6	2280.2	22.80	330.70	41	105.8
288.56	2.89	41.85	-26	-14.8	2336.1	23.36	338.81	42	107.6
300.22	3.00	43.54	-25	-13	2393.2	23.93	347.09	43	109.4
312.24	3.12	45.28	-24	-11.2	2451.3	24.51	355.52	44	111.2
324.63	3.25	47.08	-23	-9.4	2510.4	25.10	364.09	45	113
337.39	3.37	48.93	-22	-7.6	2570.7	25.71	372.84	46	114.8
350.54	3.51	50.84	-21	-5.8	2632.1	26.32	381.74	47	116.6
364.08	3.64	52.80	-20	-4	2694.7	26.95	390.82	48	118.4
378.02	3.78	54.83	-19	-2.2	2758.3	27.58	400.04	49	120.2
392.37	3.92	56.91	-18	-0.4	2823.2	28.23	409.46	50	122
407.13	4.07	59.05	-17	1.4	2889.3	28.89	419.04	51	123.8

© 2025 Carrier. All rights Reserved.

Manufacturer reserves the right to change, at any time, specifications and designs without notice and without obligations.

System Pressure Table-R454B (Continued)

Pressure			Temperature		Pressure			Temperature	
Kpa	bar	PSI	°C	°F	Kpa	bar	PSI	°C	°F
422.31	4.22	61.25	-16	3.2	2956.5	29.57	428.79	52	125.6
437.92	4.38	63.51	-15	5	3025	30.25	438.72	53	127.4
453.98	4.54	65.84	-14	6.8	3094.7	30.95	448.83	54	129.2
470.47	4.70	68.23	-13	8.6	3165.7	31.66	459.13	55	131
487.43	4.87	70.69	-12	10.4	3238.1	32.38	469.63	56	132.8
504.84	5.05	73.22	-11	12.2	3311.7	33.12	480.30	57	134.6
522.73	5.23	75.81	-10	14	3386.7	33.87	491.18	58	136.4
541.1	5.41	78.48	-9	15.8	3463	34.63	502.25	59	138.2
559.95	5.60	81.21	-8	17.6	3540.7	35.41	513.52	60	140
579.31	5.79	84.02	-7	19.4	3619.9	36.20	525.00	61	141.8
599.16	5.99	86.90	-6	21.2	3700.5	37.01	536.69	62	143.6
619.54	6.20	89.85	-5	23	3782.7	37.83	548.61	63	145.4
640.43	6.40	92.88	-4	24.8	3866.3	38.66	560.74	64	147.2
661.86	6.62	95.99	-3	26.6	3951.5	39.52	573.10	65	149
683.82	6.84	99.18	-2	28.4	4038.3	40.38	585.69	66	150.8
706.34	7.06	102.44	-1	30.2	4126.8	41.27	598.52	67	152.6
729.41	7.29	105.79	0	32	4217	42.17	611.60	68	154.4
753.06	7.53	109.22	1	33.8	4309	43.09	624.95	69	156.2
777.28	7.77	112.73	2	35.6	4402.9	44.03	638.56	70	158
802.08	8.02	116.33	3	37.4	4498.7	44.99	652.46	71	159.8
827.48	8.27	120.01	4	39.2	4596.5	45.97	666.64	72	161.6
853.49	8.53	123.78	5	41	4696.5	46.97	681.15	73	163.4
880.11	8.80	127.64	6	42.8	4798.9	47.99	696.00	74	165.2
907.35	9.07	131.60	7	44.6	4904.1	49.04	711.25	75	167

Manufacturer reserves the right to change, at any time, specifications and designs without notice and without obligations.

© 2025 Carrier. All rights Reserved.
Edition Date: 07/25
Catalog No: **45MBAAQ-01SM**
Replaces: New

Manufacturer reserves the right to change, at any time, specifications and designs without notice and without obligations.