45MCFA
Ceiling/Floor Unit Ductless System
Sizes 18K to 60K

INSTALLATION MANUAL

Fig. 1 —Sizes 18K- 60K

NOTES: Read the entire instruction manual before starting the installation. Images are for illustration purposes only. Actual models may differ slightly.

TABLE OF CONTENTS

PAGE

TABLE OF CONTENTS 1
SAFETY CONSIDERATIONS 1
ELECTRICAL DATA 8
COMPATIBILITY 8
PRODUCT OVERVIEW 9
PART NAMES 9
PRODUCT INSTALLATION 10
WIRED WALL-MOUNTED REMOTE CONTROLLER KSACN1401AAA INSTALLATION (OPTIONAL) 11
WIRED WALL-MOUNTED REMOTE CONTROLLER KSACN1201AAA INSTALLATION (OPTIONAL) 12
WIRING DIAGRAMS 13
INSTALLATION SUMMARY 14
A. INSTALL INDOOR UNIT 15
B. INSTALL DRAIN PIPE 18
C. WIRING CONNECTION 19
INDOOR UNIT WIRING 20
D. CONNECT THE REFRIGERANT PIPES 20
TROUBLESHOOTING 22
DUCTLESS START - UP CHECKLIST - Single Zone 23

SAFETY CONSIDERATIONS

Installing, starting up, and servicing air- conditioning equipment can be hazardous due to system pressures, electrical components, and equipment location (roofs, elevated structures, etc.).
Only trained, qualified installers and service mechanics should install, start- up, and service this equipment.

Untrained personnel can perform basic maintenance functions such as coil cleaning. All other operations should be performed by trained service personnel only.

When working on the equipment, observe the precautions in the literature and on tags, stickers, and labels attached to the equipment.

Follow all safety codes.Wear safety glasses and work gloves. Keep a quenching cloth and a fire extinguisher nearby when brazing. Use care in handling, rigging, and setting bulky equipment.
Read these instructions thoroughly and follow all warnings or cautions included in the literature and attached to the unit. Consult local building codes and National Electrical Code (NEC) for special requirements.
Recognize safety information.

This is the safety - alert symbol ⚠.

When you see this symbol on the unit and in instructions or manuals, be alert to the potential for personal injury. Understand these signal words: **DANGER**, **WARNING**, and **CAUTION**. These words are used with the safety- alert symbol.

DANGER identifies the most serious hazards which will result in severe personal injury or death.

WARNING signifies hazards which could result in personal injury or death.

CAUTION is used to identify unsafe practices which may result in minor personal injury or product and property damage.

NOTE is used to highlight suggestions which will result in enhanced installation, reliability, or operation.

⚠ WARNING

ELECTRICAL SHOCK HAZARD
Failure to follow this warning could result in personal injury or death.

Before installing, modifying, or servicing system, the main electrical disconnect switch must be in the OFF position. There may be more than 1 disconnect switch. Lock out and tag switch with a suitable warning label.

WARNING

EXPLOSION HAZARD

Failure to follow this warning could result in death, serious personal injury, and/or property damage.

Never use air or gases containing oxygen for leak testing or operating refrigerant compressors. Pressurized mixtures of air or gases containing oxygen can lead to an explosion.

WARNING

Only use the specified wire. If the wire is damaged, it must be replaced by the manufacturer, its service agent or similarly qualified persons in order to avoid a hazard. The product must be properly grounded at the time of installation, or electric shock may occur.

For all electrical work, follow all local and national wiring standards, regulations, and the Installation Manual. Connect the cables tight, and clamp them securely to prevent external forces from damaging the terminal. Improper electrical connections can overheat and cause fire, and may also cause shock. All electrical connections must be made according to the Electrical Connection Diagram located on the panels of the indoor and outdoor units.

All wiring must be properly arranged to ensure that the control board cover can close properly. If the control board cover is not closed properly, it can lead to corrosion and cause the connection points on the terminal to heat up, catch fire, or cause electrical shock.

Disconnection must be incorporated in the fixed wiring in accordance with NEC, CSA and Local Codes. **Do not** share the electrical outlet with other appliances. Improper or insufficient power supply can cause fire or electric shock.

If connecting power to fixed wiring, an all-pole disconnection device which has at least 3mm clearances in all poles, and have a leakage current that may exceed 10mA, the residual current device (RCD) having a rated residual operating current not exceeding 30mA, and disconnection must be incorporated in the fixed wiring in accordance with NEC, CSA and Local Codes.

CAUTION

EQUIPMENT DAMAGE HAZARD

Failure to follow this caution may result in equipment damage or improper operation.

Do not bury more than 36 in. (914 mm) of refrigerant pipe in the ground. If any section of pipe is buried, there must be a 6 in. (152 mm) vertical rise to the valve connections on the outdoor units. If more than the recommended length is buried, refrigerant may migrate to the cooler buried section during extended periods of system shutdown. This causes refrigerant slugging and could possibly damage the compressor at start-up.

WARNING

This appliance is not intended for use by persons (including children) with reduced physical, sensory or mental capabilities, or lack of experience and knowledge, unless they have been given supervision or instruction concerning use of the appliance by a person responsible for their safety. Children should be supervised to ensure that they do not play with the appliance.

WARNING

Turn off the air conditioner and disconnect the power before performing any installation or repairing. Failure to do so can cause electric shock.

Installation must be performed by an authorized dealer or specialist. Defective installation can cause water leakage, electrical shock, or fire. Installation must be performed according to the installation instructions.

Improper installation can cause water leakage, electrical shock, or fire. Contact an authorized service technician for repair or maintenance of this unit. This appliance shall be installed in accordance with national wiring regulations.

Only use the included accessories, parts, and specified parts for installation. Using non-standard parts can cause water leakage, electrical shock, fire, and can cause the unit to fail.

Install the unit in a firm location that can support the unit's weight. If the chosen location cannot support the unit's weight, or the installation is not done properly, the unit may drop and cause serious injury and damage. Install drainage piping according to the instructions in this manual. Improper drainage may cause water damage to your home and property. For units that have an auxiliary electric heater, do not install the unit within 3 feet (1 meter) of any combustible materials.

If combustible gas accumulates around the unit, it may cause fire.

Do not turn on the power until all work has been completed.

When moving or relocating the air conditioner, consult experienced service technicians for disconnection and re-installation of the unit.

How to install the appliance to its support, please read the information for details in "indoor unit installation" and "outdoor unit installation" sections.

NOTE: The air conditioner's circuit board (PCB) is designed with a fuse to provide overcurrent protection. The specifications of the fuse are printed on the circuit board, for example: T3.15AL/250VAC, T5AL/250VAC, T3.15A/250VAC, T5A/250VAC, T20A/250VAC, T30A/250VAC,etc.

NOTE: Only a blast-proof ceramic fuse can be used.

⚠ WARNING

FOR FLAMMABLE REFRIGERANTS

Do not use means to accelerate the defrosting process or to clean, other than those recommended by the manufacturer.

The appliance shall be stored in a room without continuously operating ignition sources (for example: open flames, an operating gas appliance or an operating electric heater).

Do not pierce or burn. Be aware that refrigerants may not contain an odor.

⚠ WARNING

PERSONAL INJURY AND PROPERTY DAMAGE HAZARD

For continued performance, reliability, and safety, the only approved accessories and replacement parts are those specified by the equipment manufacturer. The use of non-manufacturer approved parts and accessories could invalidate the equipment limited warranty and result in a fire risk, equipment malfunction, and failure.

Please review the manufacturer's instructions and replacement parts catalogs available from your equipment supplier.

R-454B Refrigerant Safety Group **A2L** **R-454B**

WARNING - Risk of Fire due to Flammable Refrigerant Used. Follow Handling Instructions Carefully in Compliance with National Regulations

NOTE: Risk of Fire. Flammable refrigerant used. To be repaired only by trained service personnel. Do not puncture refrigerant tubing.

1. **Installation (where refrigerant pipes are allowed)**
   - –Any person who is involved with working on or breaking into a refrigerant circuit should hold a current valid certificate from an industry-accredited assessment authority, which authorizes their competence to handle refrigerants safely in accordance with an industry recognized assessment specification.
   - –Maintenance and repair requiring the assistance of other skilled personnel shall be carried out under the supervision of the person competent in the use of flammable refrigerants.
   - –That the installation of pipe-work shall be kept to a minimum.
   - –That pipe-work shall be protected from physical damage.
   - –Where refrigerant pipes shall be compliance with national gas regulations.
   - –That mechanical connections shall be accessible for maintenance purposes.
   - –Be more careful that foreign matter (oil, water, etc) does not enter the piping. Also, when storing the piping, securely seal the opening by pinching, taping, etc.
   - –Appliance shall be stored in a well ventilated area where the room size corresponds to the room area as specific for operation.
   - –Joints shall be tested with detection equipment with a capability of 1/8 oz (5g)/year of refrigerant or better, with the equipment in standstill and under operation or under a pressure of at least these standstill or operation conditions after installation.
   - –In cases that require mechanical ventilation, ventilation openings shall be kept clear of obstruction.

   LEAK DETECTION SYSTEM installed. Unit must be powered except for service. For the unit with refrigerant sensor, when the refrigerant sensor detects refrigerant leakage, the indoor unit will display a error code and emit a buzzing sound, the compressor of outdoor unit will immediately stop, and the indoor fan will start running. The service life of the refrigerant sensor is 15 years. When the refrigerant sensor malfunctions, the indoor unit will display the error code FHCC. The refrigerant sensor can not be repaired and can only be replaced by the manufacture. It shall only be replaced with the sensor specified by the manufacture.

2. **Because a FLAMMABLE REFRIGERANT is used**

   The requirements for installation space of appliance and/or ventilation requirements are determined according to:
   - – the mass charge amount (M) used in the appliance,
   - –-the installation location,
   - –-the type of ventilation of the location or of the appliance.
   - –-piping material, pipe routing, and installation shall include protection from physical damage in operation and service, and be in compliance with national and local codes and standards, such as ASHRAE 15, IAPMO Uniform Mechanical Code, ICC International Mechanical Code, or CSA B52. All field joints shall be accessible for inspection prior to being covered or enclosed.
   - –-that protection devices, piping, and fittings shall be protected as far as possible against adverse environmental effects, for example, the danger of water collecting and freezing in relief pipes or the accumulation of dirt and debris;
   - –-that piping in refrigeration systems shall be so designed and installed to minimize the likelihood of hydraulic shock damaging the system;
   - –-that steel pipes and components shall be protected against corrosion with a rustproof coating before applying any insulation;
   - –-that precautions shall be taken to avoid excessive vibration or pulsation;
   - –-the minimum floor area of the room shall be mentioned in the form of a table or a single figure without reference to a formula;
   - –-after completion of field piping for split systems, the field pipework shall be pressure tested with an inert gas and then vacuum tested prior to refrigerant charging, according to the following requirements:

   a. The minimum test pressure for the low side of the system shall be the low side design pressure and the minimum test pressure for the high side of the system shall be the high side design pressure, unless the high side of the system cannot be isolated from the low side of the system in which case the entire system shall be pressure tested to the low side design pressure.

   b. The test pressure after removal of pressure source shall be maintained for at least 1 hour with no decrease of pressure indicated by the test gauge, with test gauge resolution not exceeding 5% of the test pressure.

   c. During the evacuation test, after achieving a vacuum level specified in the manual or less, the refrigeration system shall be isolated from the vacuum pump and the pressure shall not rise above 1500 microns within 10 minutes. The vacuum pressure level shall be specified in the manual, and shall be the lessor of 500 microns or the value required for compliance with national and local codes and standards, which may vary between residential, commercial, and industrial buildings.

–field-made refrigerant joints indoors shall be tightness tested according to the following requirements: The test method shall have a sensitivity of 1/8 oz (5g)/year of refrigerant or better under a pressure of at least 125% of the maximum allowable pressure. No leak shall be detected.

3. **Qualification of workers**

Any maintenance, service and repair operations must be required qualification of the working personnel. Every working procedure that effects safety means shall only be carried out by competent persons that joined the training and achieved competence should be documented by a certificate. The training of these procedures is carried out by national training organizations or manufacturers that are accredited to teach the relevant national competency standards that may be set in legislation. Examples for such working procedures are:

• breaking into the refrigerating circuit;
• opening of sealed components;
• opening of ventilated enclosures.

Information Servicing

1. Checks to the area

Prior to beginning work on systems containing flammable refrigerants, safety checks are necessary to ensure that the risk of ignition is minimized. For repair to the refrigerating system, the following precautions shall be complied with prior to conducting work on the system.

2. Work procedure

Works shall be undertaken under a controlled procedure so as to minimize the risk of a flammable gas or vapor being present while the work is being performed.

3. General work area

All maintenance staff and others working in the local area shall be instructed on the nature of work being carried out. work in confined spaces shall be avoided.

4. Checking for presence of refrigerant

The area shall be checked with an appropriate refrigerant detector prior to and during work to ensure the technician is aware of potentially flammable atmospheres. Ensure that the leak detection equipment is suitable for use with flammable refrigerants (no sparking, adequately sealed, or intrinsically safe).

5. Presence of fire extinguisher

If any hot work is to be conducted on the refrigeration equipment or any associated parts, appropriate fire extinguishing equipment shall be available to hand. Have a dry power or CO2 fire extinguisher adjacent to the charging area.

6. No ignition sources

No person carrying out work in relation to a REFRIGERATING SYSTEM which involves exposing any pipe work shall use any sources of ignition in such a manner that it may lead to the risk of fire or explosion. All possible ignition sources, including cigarette smoking, should be kept sufficiently far away from the site of installation, repairing, removing and disposal, during which refrigerant can possibly be released to the surrounding space. Prior to work taking place, the area around the equipment is to be surveyed to make sure that there are no flammable hazards or ignition risks. “No Smoking” signs shall be displayed.

7. Ventilated area

Ensure that the area is in the open or that it adequately ventilated before breaking into the system or conducting any hot work. A degree of ventilation shall continue during the period that the work is carried out. The ventilation should safely disperse any released refrigerant and preferably expel it externally into the atmosphere.

8. Checks to the refrigeration equipment

Where electrical components are being changed, they shall be fit for the purpose and to the correct specification. At all times the manufacturer’s maintenance and service guidelines shall be followed. If in doubt consult the manufacturer’s technical department for assistance. The following checks shall be applied to installations using FLAMMABLE REFRIGERANTS:

• The actual refrigerant charge is in accordance with the room size within which the refrigerant containing parts are installed;
• The ventilation machinery and outlets are operating adequately and are not obstructed;
• If an indirect refrigerating circuit is being used, the secondary circuits shall be checked for the presence of refrigerant;
• Marking to the equipment continues to be visible and legible, marking and signs that are illegible shall be corrected;
• Refrigeration pipe or components are installed in a position where they are unlikely to be exposed to any substance which may corrode refrigerant containing components, unless the components are constructed of materials which are inherently resistant to being corroded or are suitably protected against being so corroded.

9. Checks to electrical devices

Repair and maintenance to electrical components shall include initial safety checks and component inspection procedures. If a fault exists that could compromise safety, then no electrical supply shall be connected to the circuit until it is satisfactorily dealt with. If the fault cannot be corrected immediately but it is necessary to continue operation, and adequate temporary solution shall be used. This shall be reported to the owner of the equipment so all parties are advised. Initial safety checks shall include:

• That capacitors are discharged: this shall be done in a safe manner to avoid possibility of sparking
• That there no live electrical components and wiring are exposed while charging, recovering or purging the system
• That there is continuity of earth bonding

10. Sealed electrical components shall be replaced.
11. Intrinsically safe components must be replaced.
12. Cabling

Check that cabling is not subjected to wear, corrosion, excessive pressure, vibration, sharp edges or any other adverse environmental effects. The check shall also take into account the effects of aging or continual vibration from sources such as compressors or fans.

Manufacturer reserves the right to change, at any time, specifications and designs without notice and without obligations.

13. Detection of flammable refrigerants

Under no circumstances shall potential sources of ignition be used in the searching for or detection of refrigerant leaks. A halide torch (or any other detector using a naked flame) shall not be used.

The following leak detection methods are deemed acceptable for refrigerant systems. Electronic leak detectors that have a sensitivity of 1/8 oz (5g) may be used to detect refrigerant leaks but, in the case of FLAMMABLE REFRIGERANTS, the sensitivity may not be adequate, or may need re-calibration. (Detection equipment shall be calibrated in a refrigerant-free area.) Ensure that the detector is not a potential source of ignition and is suitable for the refrigerant used. Leak detection equipment shall be set at a percentage of the LFL of the refrigerant and shall be calibrated to the refrigerant employed, and the appropriate percentage of gas (25% maximum) is confirmed.

Leak detection fluids are also suitable for use in external leak detection.

NOTE: Examples of leak detection fluids are as follows:

- **Bubble method**
- **Fluorescent method agents**

If a leak is suspected, all naked flames shall be removed/extinguished.

If a leakage of refrigerant is found which requires brazing, all of the refrigerant shall be recovered from the system, or isolated (by means of shut off valves) in a part of the system remote from the leak. See the following instructions of removal of refrigerant.

14. Removal and evacuation

When breaking into the refrigerant circuit to make repairs - or for any other purpose conventional procedures shall be used. However, for flammable refrigerants it is important that best practice be followed, since flammability is a consideration.

The following procedure shall be adhered to:

a. safely remove refrigerant following local and national regulations;
b. evacuate;
c. purge the circuit with nitrogen;
d. evacuate;
e. continuously flush or purge with nitrogen when using flame to open circuit; and open the circuit.

The refrigerant charge shall be recovered into the correct recovery cylinders. Charging must be performed by liquid charging method. For appliances containing flammable refrigerants, the system shall be purged with oxygen-free nitrogen to render the appliance safe for flammable refrigerants. This process might need to be repeated several times. Compressed air or oxygen shall not be used for purging refrigerant systems.

For appliances containing flammable refrigerants, refrigerants purging shall be achieved by breaking the vacuum in the system with oxygen-free nitrogen and continuing to fill until the working pressure is achieved, then venting to atmosphere, and finally pulling down to a vacuum (optional for A2L). This process shall be repeated until no refrigerant is within the system (optional for A2L). When the final oxygen-free nitrogen charge is used, the system shall be vented down to atmospheric pressure to enable work to take place.

The outlet for the vacuum pump shall not be close to any potential ignition sources, and ventilation shall be available.

15. Charging procedures

In addition to conventional charging procedures, the following requirements shall be followed:

- Works shall be undertaken with appropriate tools only. If uncertain, consult the manufacturer of the tools for use with flammable refrigerants.
- Ensure that contamination of different refrigerants does not occur when using charging equipment. Hoses or lines shall be as short as possible to minimize the amount of refrigerant contained in them.
- Cylinders shall be kept upright.
- Charging must be performed by liquid charging method.
- Ensure that the refrigeration system is grounded prior to charging the system with refrigerant.
- Label the system when charging is complete.
- Extreme care shall be taken to avoid overfilling the refrigeration system.
- Prior to recharging the system, it shall be pressure tested with oxygen free nitrogen (OFN). The system shall be leak tested on completion of charging but before commissioning. A follow up leak test shall be carried out prior to leaving the site.

16. Decommissioning

Before carrying out this procedure, it is essential that the technician is completely familiar with the equipment and all its detail. It is recommended good practice that all refrigerants are recovered safely. Prior to the task being carried out, an oil and refrigerant sample shall be taken in case analysis is required prior to re-use of recovered refrigerant. It is essential that electrical power is available before the task is commenced.

a. Become familiar with the equipment and its operation
b. Isolate system electrically
c. Before attempting the procedure, ensure the following:
   - Mechanical handling equipment is available, if required, for handling refrigerant cylinders
   - All personal protective equipment is available and being used correctly
   - The recovery process is supervised at all times by a competent person
   - Recovery equipment and cylinders conform to the appropriate standards
d. Pump down refrigerant system, if possible.
e. If a vacuum is not possible, make a manifold so that refrigerant can be removed from various parts of the system.
f. Make sure that cylinder is situated on the scales before recovery takes place.
g. Start the recovery machine and operate in accordance with instructions.
h. Do not overfill cylinders (no more than 80% volume liquid charge).
i. Never exceed the maximum working pressure of the cylinder.
j. When the cylinders have been filled correctly and the process complete, make sure that the cylinders and the equipment are removed from site promptly and all isolation valves on the equipment are closed off.
k. Recovered refrigerant shall not be charged into another refrigeration system unless it has been cleaned and checked.

17. Labeling

Equipment shall be labeled stating that it has been decommissioned and emptied of refrigerant. The label shall be dated and signed. For appliances containing FLAMMABLE REFRIGERANTS, ensure that there are labels on the equipment stating the equipment contains FLAMMABLE REFRIGERANT.

18. Recovery

    When removing refrigerant from a system, either for servicing or decommissioning, it is recommended good practice that all refrigerants are removed safely.

    When transferring refrigerant into cylinders, ensure that only appropriate refrigerant recovery cylinders are employed. Ensure that the correct number of cylinders for holding the total system charge is available. All cylinders to be used are designated for the recovered refrigerant and labeled for that refrigerant (i. e. special cylinders for the recovery of refrigerant). Cylinders shall be complete with pressure-relief valve and associated shut-off valves in good working order. Empty recovery cylinders are evacuated and, if possible, cooled before recovery occurs.

    The recovery equipment shall be in good working order with a set of instructions concerning the equipment that is at hand and shall be suitable for the recovery of the flammable refrigerant. If in doubt, the manufacturer should be consulted. In addition, a set of calibrated weighing scales shall be available and in good working order. Hoses shall be complete with leak-free disconnect couplings and in good condition.

    The recovered refrigerant shall be processed according to local legislation in the correct recovery cylinder, and the relevant waste transfer note arranged. Do not mix refrigerants in recovery units and especially not in cylinders.

    If compressors or compressor oils are to be removed, ensure that they have been evacuated to an acceptable level to make certain that flammable refrigerant does not remain within the lubricant. The compressor body shall not be heated by an open flame or other ignition sources to accelerate this process. When oil is drained from a system, it shall be carried out safely.

19. Transportation, marking, and storage for units
    a. Transport of equipment containing flammable refrigerants.
       Compliance with the transport regulations.
    b. Marking of equipment using signs.
       Compliance with local regulations.
    c. Disposal of equipment using flammable refrigerants.
       Compliance with national regulations.
    d. Storage of equipment/appliances
       The storage of equipment should be in accordance with the manufacturer's instructions.
    e. Storage of packed (unsold) equipment
       Storage package protection should be constructed such that mechanical damage to the equipment inside the package will not cause a leak of the refrigerant charge. The maximum number of pieces of equipment permitted to be stored together will be determined by local regulations.

DEHUMIDIFICATION (DRY)

In DEHUMIDIFICATION mode, the system dries, filters and slightly cools the room air temperature. This mode prioritizes air dehumidification but it does not take the place of a dehumidifier.

For indoor and outdoor unit compatibility, see Table 1, Table 6 on page 8, and Table 7 on page 8.

Table 1 — Indoor / Outdoor Unit Matching

INDOOR UNIT	OUTDOOR UNIT
Single Zone Compatible	37MAHAQ
	37MARAQ
Multi Zone Compatible	37MGHAQ
	37MGRAQ

Table 2 — Symbols displayed on the indoor unit or outdoor unit

	WARNING	This symbol shows that this appliance used a flammable refrigerant. If the refrigerant is leaked and exposed to an external ignition source, there is a risk of fire.
	CAUTION	This symbol shows that the operation manual should be read carefully.
	CAUTION	This symbol shows that a service personnel should be handling this equipment with reference to the installation manual.
	CAUTION	
	CAUTION	This symbol shows that information is available such as the operating manual or installation manual.

For R-454B Refrigerant Charge Amount and Minimum Room Area:

The machine you purchased may be one of the types in Table 3. The indoor and outdoor units are designed to be used together. Please check the machine you purchased. The height of the room cannot be less than 7.3 feet / 2.2 meters; and the minimum room area of operating or storage should be specified in Table 3.

NOTE: This air conditioner can be installed on the wall or suspended from the ceiling.

Table 3 — A (min)

		Ho, release height ft (m)					
MC or Mrel Refrigerant Charge Amount pounds (kilograms)	Mc or Mrel (lbs(kgs)	≤ 7.2 (2.2)	7.5 (2.3)	7.9 (2.4)	8.5 (2.6)	9.2 (2.8)	9.8 (3.0)
	≤ 3.91 (1.776)	12 (1.10)					
	4.0 (1.8)	60 (5.53)	57 (5.29)	55 (5.07)	50 (4.68)	47 (4.34)	44 (4.05)
	4.4 (2.0)	66 (6.14)	63 (5.88)	61 (5.63)	56 (5.2)	52 (4.83)	48 (4.5)
	4.9 (2.2)	73 (6.76)	70 (6.46)	67 (6.19)	62 (5.72)	57 (5.31)	53 (4.95)
	5.3 (2.4)	79 (7.37)	76 (7.05)	73 (6.76)	67 (6.24)	62 (5.79)	58 (5.41)
	5.7 (2.6)	86 (7.99)	82 (7.64)	79 (7.32)	73 (6.76)	68 (6.27)	63 (5.86)
	6.2 (2.8)	93 (8.6)	89 (8.23)	85 (7.88)	78 (7.28)	73 (6.76)	68 (6.31)
	6.6 (3.0)	99 (9.21)	95 (8.81)	91 (8.45)	84 (7.8)	78 (7.24)	73 (6.76)
	7.1 (3.2)	106 (9.83)	101 (9.4)	97 (9.01)	90 (8.32)	83 (7.72)	78 (7.21)
	7.5 (3.4)	112 (10.44)	108 (9.99)	103 (9.57)	95 (8.84)	88 (8.2)	82 (7.66)
	7.9 (3.6)	119 (11.06)	114 (10.58)	109 (10.14)	101 (9.36)	94 (8.69)	87 (8.11)
	8.4 (3.8)	126 (11.67)	120 (11.16)	115 (10.7)	106 (9.88)	99 (9.17)	92 (8.56)
	8.8 (4.0)	132 (12.29)	126 (11.75)	121 (11.26)	112 (10.4)	104 (9.65)	97 (9.01)
	9.3 (4.2)	139 (12.9)	133 (12.34)	127 (11.82)	117 (10.91)	109 (10.14)	102 (9.46)
	9.7 (4.4)	145 (13.51)	139 (12.93)	133 (12.39)	123 (11.43)	114 (10.62)	107 (9.91)
	10.1 (4.6)	152 (14.13)	145 (13.51)	139 (12.95)	129 (11.95)	119 (11.1)	112 (10.36)
	10.6 (4.8)	159 (14.74)	152 (14.1)	145 (13.51)	134 (12.47)	125 (11.58)	116 (10.81)
	11 (5.0)	165 (15.36)	158 (14.69)	152 (14.08)	140 (12.99)	130 (12.07)	121 (11.26)
	11.5 (5.2)	172 (15.97)	164 (15.28)	158 (14.64)	145 (13.51)	135 (12.55)	126 (11.71)
	11.9 (5.4)	179 (16.58)	171 (15.86)	164 (15.2)	151 (14.03)	140 (13.03)	131 (12.16)
	12.3 (5.6)	185 (17.2)	177 (16.45)	170 (15.77)	157 (14.55)	145 (13.51)	136 (12.61)
	12.8 (5.8)	192 (17.81)	183 (17.04)	176 (16.33)	162 (15.07)	151 (14)	141 (13.06)
	13.2 (6.0)	198 (18.43)	190 (17.63)	182 (16.89)	168 (15.59)	156 (14.48)	145 (13.51)
	13.7 (6.2)	205 (19.04)	196 (18.21)	188 (17.45)	173 (16.11)	161 (14.96)	150 (13.96)
	14.1 (6.4)	212 (19.66)	202 (18.8)	194 (18.02)	179 (16.63)	166 (15.44)	155 (14.41)
	14.6 (6.6)	218 (20.27)	209 (19.39)	200 (18.58)	185 (17.15)	171 (15.93)	160 (14.86)
	15 (6.8)	225 (20.88)	215 (19.98)	206 (19.14)	190 (17.67)	177 (16.41)	165 (15.32)
	15.4 (7.0)	231 (21.5)	221 (20.56)	212 (19.71)	196 (18.19)	182 (16.89)	170 (15.77)
	15.9 (7.2)	238 (22.11)	228 (21.15)	218 (20.27)	201 (18.71)	187 (17.37)	175 (16.22)
	Amin (ft2 (m2) Mc - Actual refrigerant charge in the system lbs (Kg) Mrel - Refrigerant releasable charge lbs (kg) Ho - Release height, measured from duct opening, in ft (m) Hinst - Height of install, from the bottom of the indoor appliance, measured in ft (m) Ho ≈ Hinst Warning: Minimum room area of conditioned space is based on releasable charge or total system refrigerant charge.						

Airflow Information

When the unit detects a refrigerant leak, the minimum airflow of the indoor unit is as follows (applicable to the units with refrigerant sensors only):

MODEL	18K	24K	36K	48K	60K
NOMINAL AIR VOLUME CFM (M^3/H)	577 (980)	736 (1250)	1224 (2080)	1353 (2300)	1365 (2320)

Model Numbers

Table 4 — Model Numbers

MODEL SIZE	INDOOR UNIT
18K	45MCFAQ18XA3
24K	45MCFAQ24XA3
36K	45MCFAQ36XA3
48K	45MCFAQ48XA3
60K	45MCFAQ58XA3

ELECTRICAL DATA

Table 5 — Electrical Data

INDOOR UNIT		18K	24K	36K	48K	60K
V-Ph-Hz		(208/230V)	(208/230V)	(208/230V)	(208/230V)	(208/230V)
Minimum Circuit Ampacity (MCA)	A	1.9	2.5	3	3	3
Maximum Overcurrent Protection (MOP)	A	15	15	15	15	15
Voltage-Phase-Frequency		208/230-1-60				
Max – Min Voltage Range		253-187				
COOLING*						
Power Consumption	(W)	1350	1833	3033	5106	6000
Running Current	(A)	8.7	8.2	13.3	22.5	26.2
HEATING*						
Power Consumption	(W)	1814	2194	3385	5330	5823
Running Current	(A)	11	10.1	15.1	24.2	26.1

LEGEND
FLA - Full Load Amps
MCA - Minimum Circuit Amps
MOP- Maximum Overcurrent Protection

NOTE: Cooling and heating electrical specifications in Table 5 is with 37MAHA.

COMPATIBILITY

Table 6 — Compatibility - Multi-Zone

INDOOR UNIT		MULTIZONE HEAT PUMP OUTDOOR UNIT					
		37MGRAQ18CA3	37MGHAQ24DA3	37MGHAQ30EA3	37MGHAQ36EA3	37MGHAQ48FA3	37MGHAQ55FA3
		37MGHAQ18CA3	37MGRAQ24DA3	37MGRAQ30EA3	37MGRAQ36EA3	37MGRAQ48FA3	37MGRAQ55FA3
Under ceiling Console	45MCFAQ18XA3	•	•	•	•	•	•
	45MCFAQ24XA3		•	•	•	•	•

Table 7 — Compatibility - Single Zone

INDOOR UNIT		SINGLE ZONE HEAT PUMP OUTDOOR UNIT				
		37MAHAQ18AA3	37MAHAQ24AA3	37MBHAQ36AA3	37MBHAQ48AA3	37MBHAQ58AA3
		37MARAQ18AA3	37MARAQ24AA3	37MBRAQ36AA3	37MBRAQ48AA3	37MBRAQ58AA3
Under ceiling-Console	45MCFAQ18XA3	•				
	45MCFAQ24XA3		•			
	45MCFAQ36XA3			•		
	45MCFAQ48XA3				•	
	45MCFAQ58XA3					•

PRODUCT OVERVIEW

NOTE: Illustrations in this manual are for explanatory purposes. The actual shape of your indoor unit may vary.

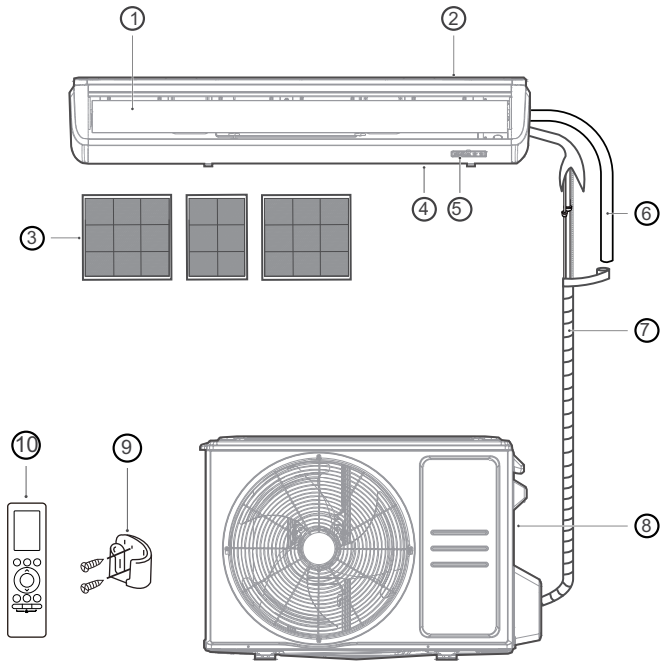

1. Air flow louver (air outlet)
2. Installation part
3. Air filter
4. Air inlet (with air filter in it)
5. Display panel
6. Drain pipe
7. Refrigerant piping (purchase separately)
8. Outdoor unit
9. Remote controller holder (purchase separately)
10. Remote controller

Fig. 2 — Product Overview

Indoor Units

Fig. 3 — Ceiling and Floor (Floor Installation)

Fig. 4 — Ceiling and Floor (Ceiling Installation)

PART NAMES

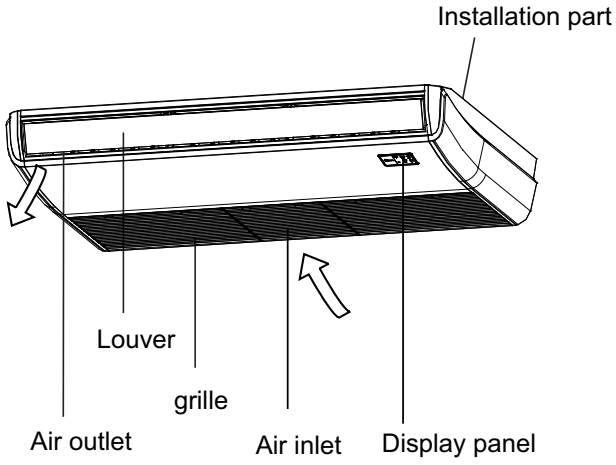

Fig. 5 —Part Names

PRODUCT INSTALLATION

ACCESSORIES

The air conditioning system comes with the following accessories. Use all of the installation parts and accessories to install the air conditioner. Improper installation may result in water leakage, electrical shock and fire, or cause the equipment to fail. The items are not included with the air conditioner must be purchased separately.

Table 8 — Accessories

NAME	QUANTITY	SHAPE	NAME	QUANTITY	SHAPE
Manual	2	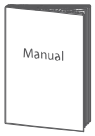	Remote controller	1	
Outlet pipe sheath	1		Batteries	2	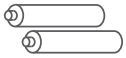
Outlet pipe clasp	2		Remote controller holder	1	
Conduit installation plate	1		Screw for remote controller holder	2	
Copper nut	2		Magnetic ring	1	
Rubber Ring	3				

Optional Accessories

There are two types of wired controls. Select a controller based on customer preferences and requirements and install in an appropriate place. Refer to catalogs and technical literature for guidance on selecting a suitable controller.

Table 9 — Optional Accessories

MODEL NO.	DESCRIPTION	FOR MODELS
KSACN1201AAA	Wired Non-Programmable Controller	All Sizes
KSACN1401AAA	Wired Programmable Controller with Built In WiFi	All Sizes

NOTE: WIFI dongle is not compatible with this indoor unit.

Pipe Specifications

Table 10 — Pipe Specifications

NAME	MODEL	PIPE SPECIFICATIONS		REMARK
		LIQUID SIDE	GAS SIDE	
CONNECTING PIPE ASSEMBLY	18K	Ø1/4in(Ø6.35mm)	Ø1/2in(Ø12.7mm)	Pipes are not included in the accessories and you need to purchase it separately from the local dealer.
	24K	Ø3/8in(Ø9.52mm)	Ø5/8in(Ø16mm)	
	36K	Ø3/8in(Ø9.52mm)	Ø3/4in(Ø19mm)	
	48K	Ø3/8in(Ø9.52mm)	Ø3/4in(Ø19mm)	
	60K	Ø3/8in(Ø9.52mm)	Ø3/4in(Ø19mm)	

WIRED WALL-MOUNTED REMOTE CONTROLLER KSACN1401AAA INSTALLATION (OPTIONAL)

The wired remote controller comes with the following items:

- A set of installation instructions and owner's manuals
- 3 M4X20 Screws to mount on the wall
- 4 wall anchors to mount on the wall
- 2 M4X25 to mount on switch box
- 2 plastic screw bars to fix on switch box
- 1 set of batteries
- 1 set of connecting wires to connect to indoor unit's main board.

Fig. 6 —Wired Controller KSACN1401AAA

NOTE: Refer to the KSACN1401AAA installation manual for more details.

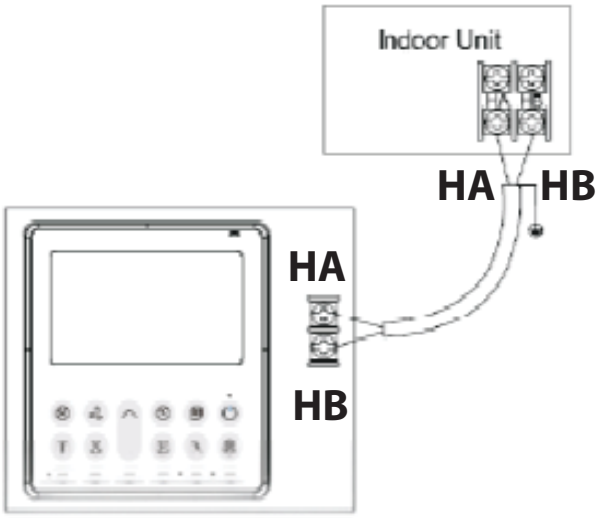

NOTE: The indoor ducted units can be programmed for different static pressures or Real-time constant airflows, use the following steps to set the static pressure or Real-time constant airflow.

For 1401 Wired Controller Terminal Port CN45

1. The CN45 port is used for connecting to the KSACN1401AAA wired controller.
2. This controller can only be connected to CN45 with field provided RS-485 wire.
3. It is recommended to use #16 or #18AWG shielded stranded wire for connecting to the wired controller.

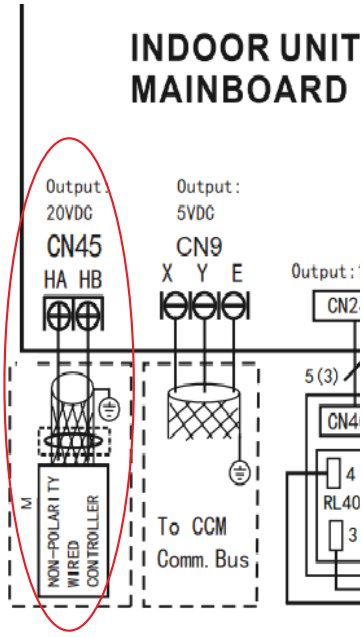

Wired Controller Terminal Port CN45

WIRED WALL-MOUNTED REMOTE CONTROLLER KSACN1201AAA INSTALLATION (OPTIONAL)

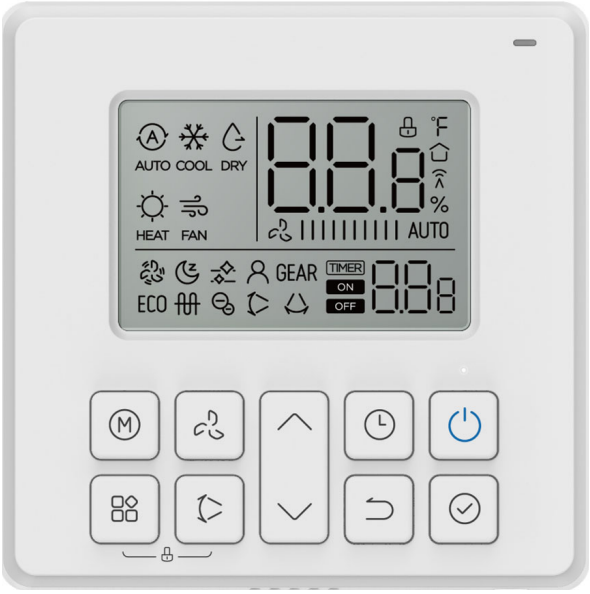

KSACN1201AAA

Fig. 7 —Wired Controller KSACN1201AAA (optional)

NOTE: Refer to the KSACN1201AAA installation manual for more details.

Connection View

(5V) Connects to 5 Wire Modular Whip that is factory installed to a CN port on the Indoor Unit Display Board.

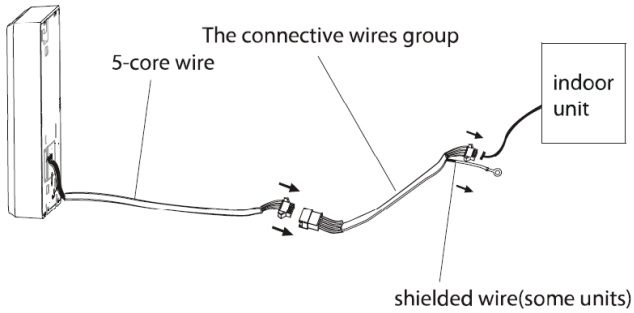

WIRING DIAGRAMS

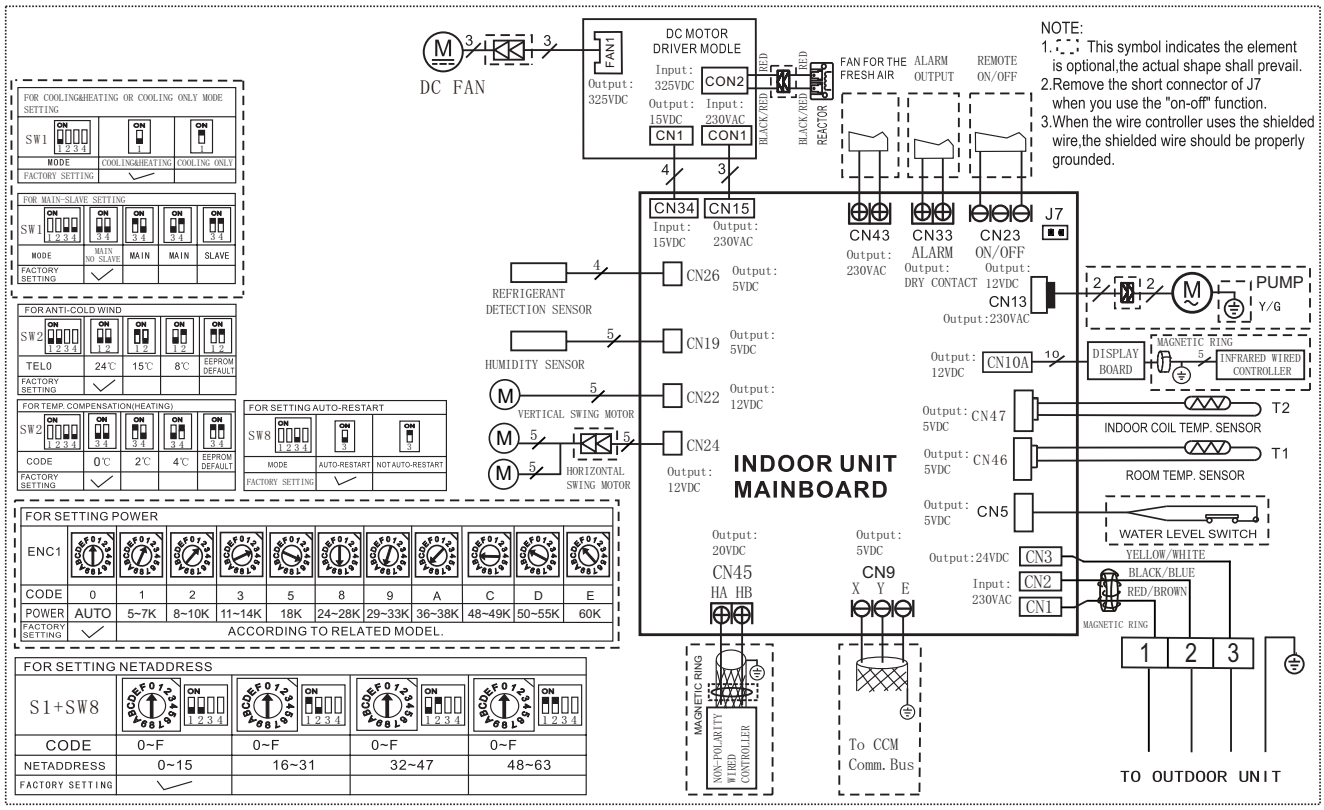

Fig. 8 — Sizes 18K - 24K

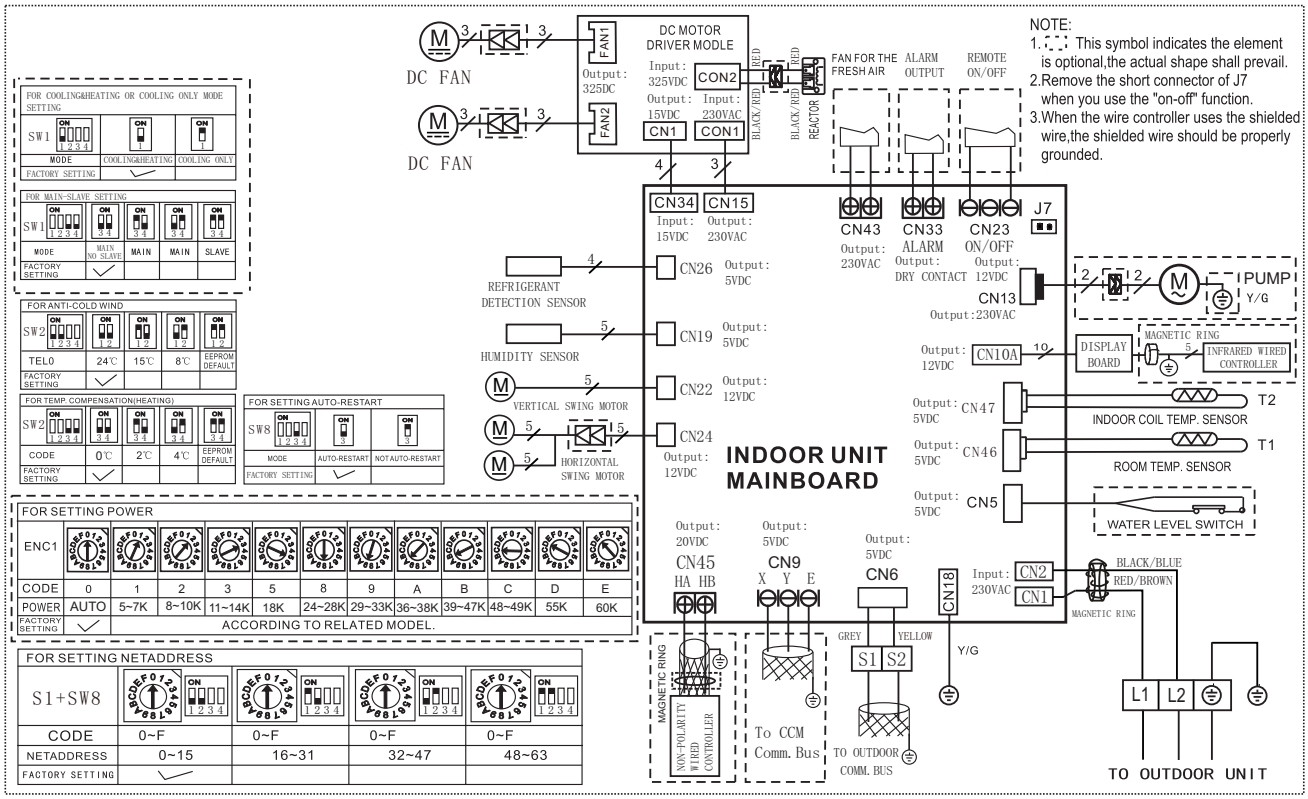

Fig. 9 — Sizes 36K-60K

NOTE: Refer to the diagram label on the unit.

INSTALLATION SUMMARY

A

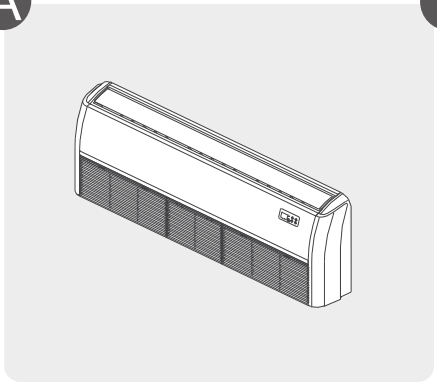

Install the indoor unit

B

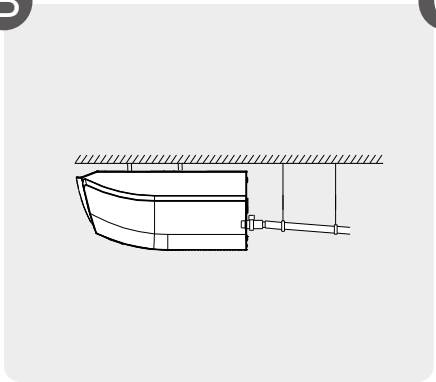

Install the drainpipe

C

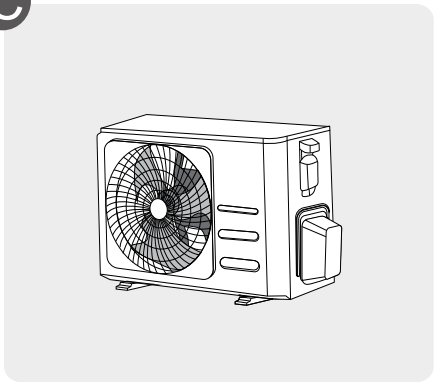

Install the outdoor unit

D

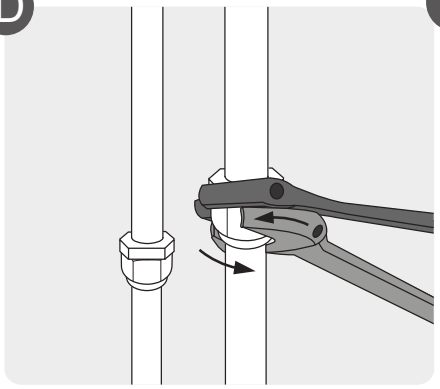

Connect the refrigerant pipes

E

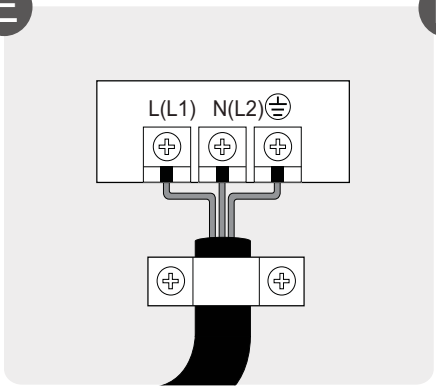

Connect the wires

F

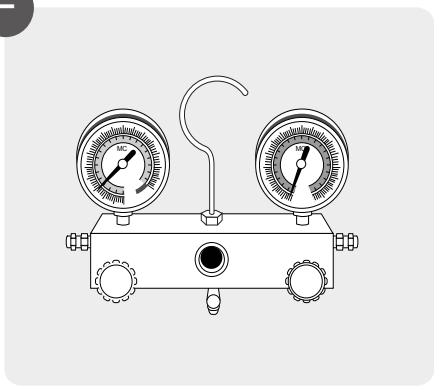

Evacuate the refrigeration system

G

Perform a test run

NOTE: Refer to the Outdoor Installation manual for steps pertaining to the outdoor unit and the system checks.

A. INSTALL INDOOR UNIT

Step 1 - Select the Installation Location

NOTE: Before installing the indoor unit, refer to the label on the product box to ensure that the model number of the indoor unit matches the model number of the outdoor unit. Panel installation should be performed after piping and wiring have been completed.

Proper installation locations meet the following standards:

- ☑ Enough room exists for installation and maintenance.
- ☑ Enough room exists for the connecting the pipe and drainpipe.

- ☑ There is no direct radiation from heaters.

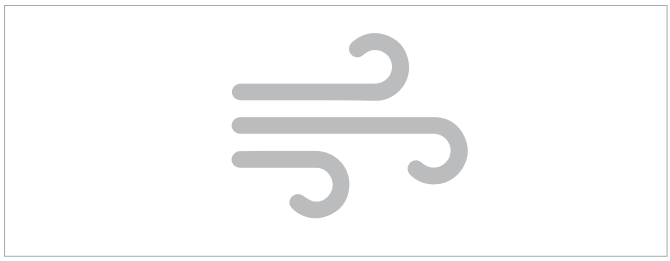

- ☑ The air inlet and outlet are not blocked.
- ☑ The airflow can fill the entire room.

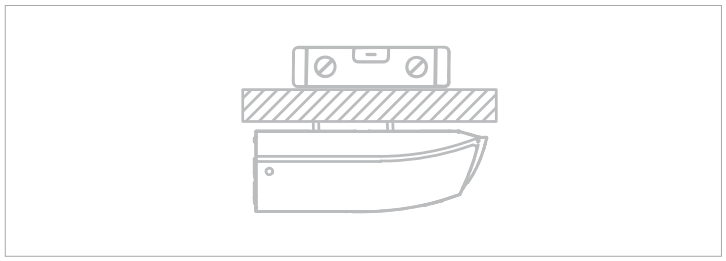

- ☑ The ceiling is horizontal and its structure can sustain the weight of the indoor unit.

<u>DO NOT</u> install unit in the following locations:

- ⊘ Areas with oil drilling or fracking
- ⊘ Coastal areas with high salt content in the air
- ⊘ Areas with caustic gases in the air, such as hot springs
- ⊘ Areas that experience power fluctuations, such as factories
- ⊘ Enclosed spaces, such as cabinets
- ⊘ Kitchens that use natural gas
- ⊘ Areas with strong electromagnetic waves
- ⊘ Areas that store flammable materials or gas
- ⊘ Rooms with high humidity, such as bathrooms or laundry rooms

Manufacturer reserves the right to change, at any time, specifications and designs without notice and without obligations.

Step 2 - Confirm the Various Sizes (Unit Dimensions)

Recommended distances between the indoor unit

The distance between the mounted indoor unit should meet the specifications shown in Fig. 10.

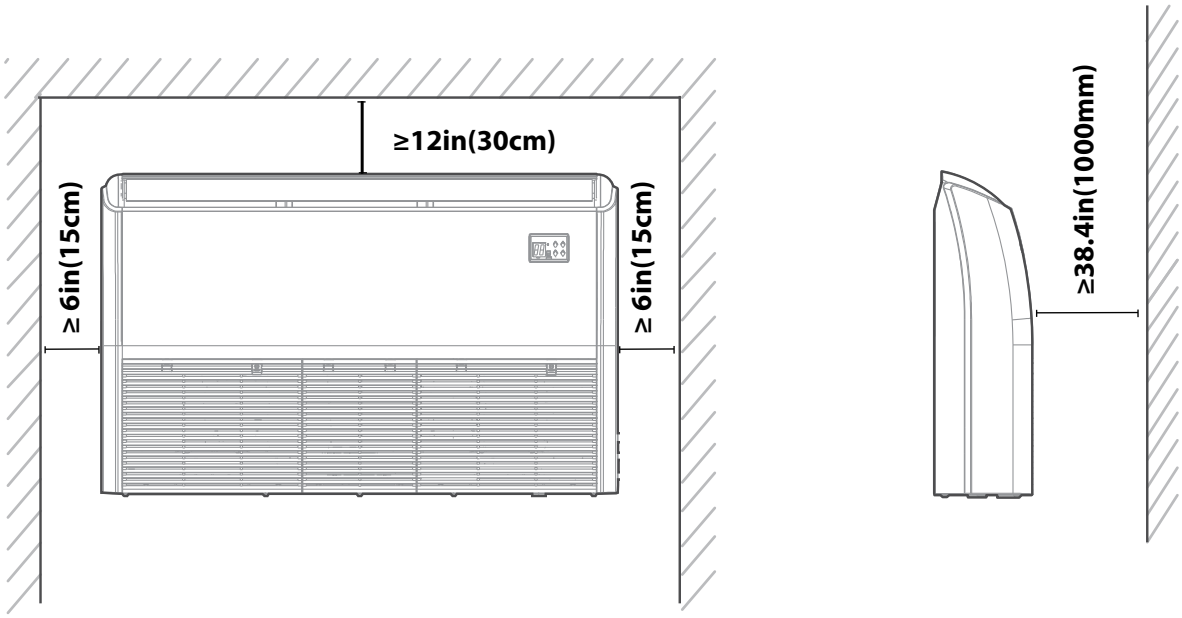

Indoor parts installation size

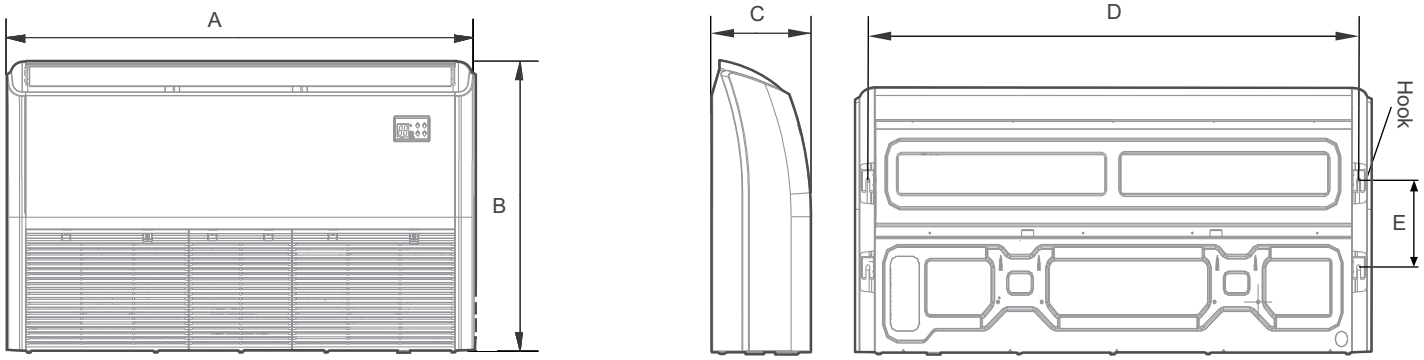

Fig. 10 — Dimensions

Table 11 — Dimensions

MODEL (BTU/H)	LENGTH OF A (INCH/MM)	LENGTH OF B (INCH/MM)	LENGTH OF C (INCH/MM)	LENGTH OF D (INCH/MM)	LENGTH OF E (INCH/MM)
18K~24K	42/1068	26.6/675	9.3/235	38.7/983	8.7/220
36K~60K	65/1650	26.6/675	9.3/235	61.6/1565	8.7/220

Step 3 - Hang the Indoor Unit

1. Install the four suspension bolts.
2. Mount the indoor unit. You will need two people to lift and secure it. Insert suspension bolts into the unit's hanging holes. Fasten them using the included washers and nuts.

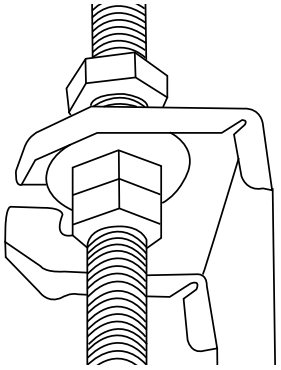

Fig. 11 — Suspension Bolt

3. Remove the side board and the grille (see Table 11 on page 16).

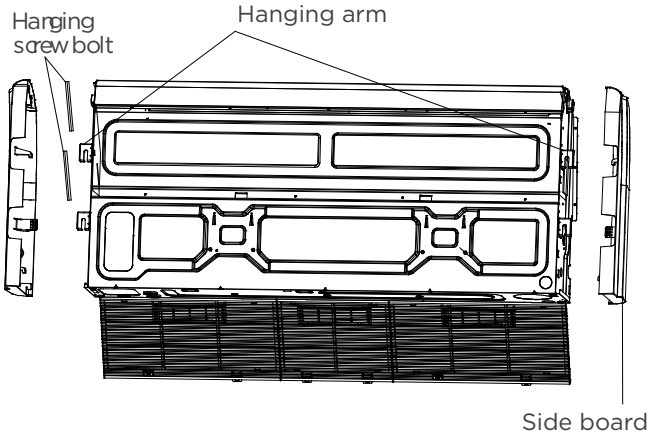

Fig. 12 — Remove the side board and grill

4. Mount the indoor unit onto the hanging screw bolts with a block. Position the indoor unit on a flat level by using a level to prevent leaks.

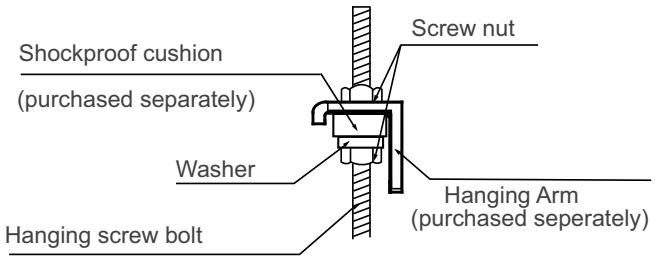

Fig. 13 — Mount the indoor unit

NOTE: Confirm the minimum drain tilt is 1/8" per foot or more.

NOTE: Follow the local codes regarding vibration installation device.

Ceiling Installation

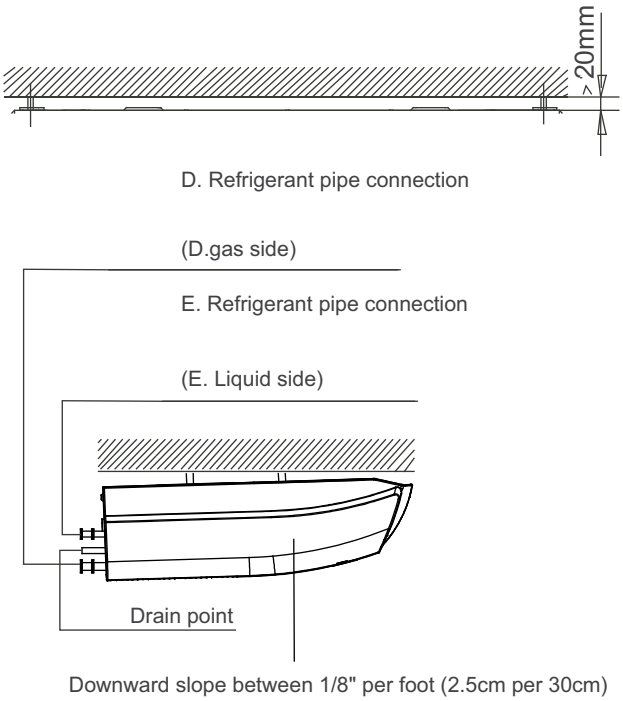

Fig. 14 — Ceiling Installation

Install the conduit installation plate (if supplied)

1. Secure the sheath connector (field supplied) on the wire hole of the conduit installation plate.
2. Secure the conduit installation plate on the chassis of the unit.

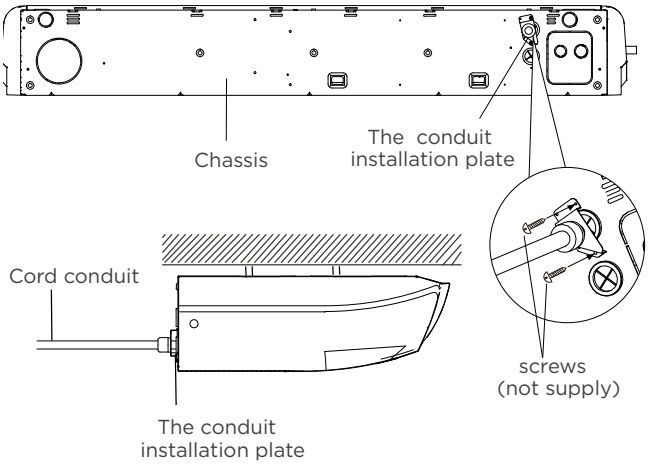

Fig. 15 — Secure the conduit installation plate

Wall-Mounted Installation

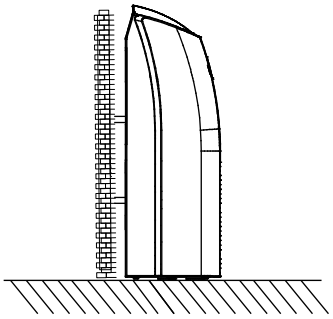

Fig. 16 — Wall-Mounted Installation

Install the conduit installation plate (if supplied)

1. Secure the sheath connector (field supplied) on the wire hole of the conduit installation plate.
2. Fix the conduit installation plate on the electric control box.

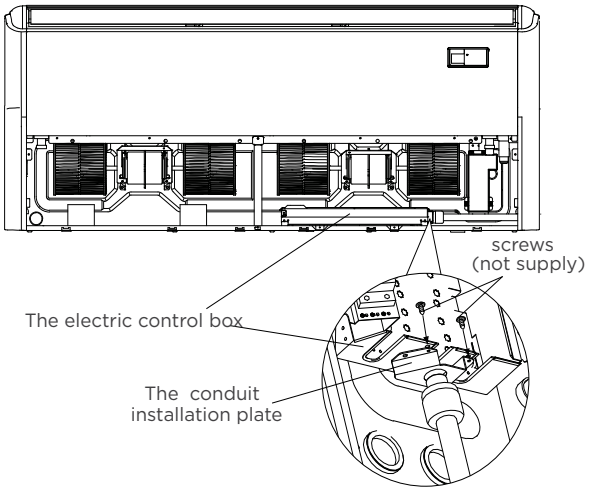

Fig. 17 — Secure the conduit installation plate

B. INSTALL DRAIN PIPE

Step 1 - Drill Wall Hole and Connect Drain Piping

1. Determine the location of the wall hole based on the location of the outdoor unit.
2. Using a 2.5in(65mm) or 3.54in(90mm) core drill, drill a hole in the wall. Ensure that the hole is drilled at a slight downward angle, so that the outdoor end of the hole is lower than the indoor end by about 0.5in(12mm). This will ensure proper water drainage.
3. Place the protective wall cuff in the hole. This protects the edges of the hole and will help seal it when you finish the installation process.

⚠ CAUTION

When drilling the wall hole, make sure to avoid wires, plumbing, and other sensitive components.

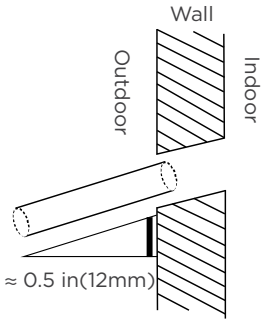

Fig. 18 — Wall hole

4. **Connect Drain Hose -** The drainpipe is used to drain water away from the unit. Improper installation may cause unit and property damage.

⚠ CAUTION

Insulate all piping to prevent condensation, which could lead to water damage.
If the drainpipe is bent or installed incorrectly, water may leak and cause a water-level switch malfunction.
In **HEAT** mode, the outdoor unit will discharge water. Ensure that the drain hose is placed in an appropriate area to avoid water damage and slippage.
DO NOT pull the drainpipe forcefully. This could disconnect it.

NOTE ON PURCHASING PIPES: Installation requires a polyethylene tube (exterior diameter = 1.46-1.54in/3.7-3.9cm, interior diameter = 1.26in/3.2cm), which can be obtained at your local hardware store or dealer.

Step 2 - Indoor Drainpipe Installation

Install the drainpipe as illustrated in Fig.19.

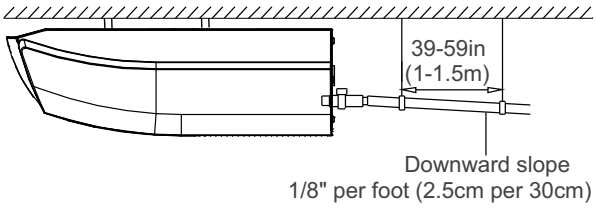

Fig. 19 — Indoor Drainpipe installation

1. Cover the drainpipe with heat insulation to prevent condensation and leakage.
2. Attach the mouth of the drain hose to the unit's outlet pipe. Sheath the mouth of the hose and clip it firmly with a pipe clasp.

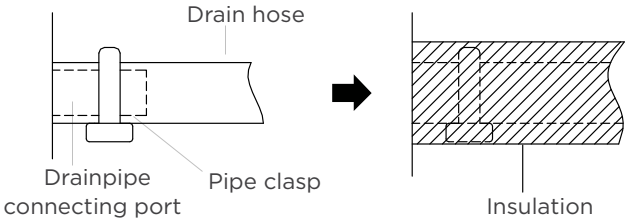

Fig. 20 — Indoor Pipe Installation

- When using an extended drainpipe, tighten the indoor connection with an additional protection tube to prevent it from pulling loose.
- The drainpipe should slope downward at a gradient of at least 1/8” per foot (2.5cm per 30cm) to prevent water from flowing back into the air conditioner.
- To prevent the pipe from sagging, space hanging wires every 39-59in (1-1.5m).
- Incorrect installation could cause water to flow back into the unit and flood.

NOTE: When connecting multiple drainpipes, install the pipes as illustrated in Figure 21.

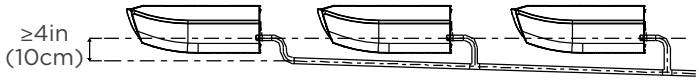

Fig. 21 — Connecting Multiple Drainpipes

3. Pass the drain hose through the wall hole. Ensure the water drains to a safe location where it will not cause water damage or a slipping hazard.

NOTE: The drainpipe outlet should be at least 1.9in (50mm) above the ground. If it touches the ground, the unit may become blocked and malfunction. If you discharge the water directly into a sewer, make sure that the drain has a U or S pipe to catch odors that might otherwise come back into the house.

C. WIRING CONNECTION

Wiring Precautions

WARNING

Before performing any electrical work, read these warnings.

All wiring must comply with local and national electrical codes, regulations and must be installed by a licensed electrician. All electrical connections must be made according to the Electrical Connection Diagram located on the panels of the indoor and outdoor units.
If there is a serious safety issue with the power supply, stop work immediately. Explain your reasoning to the client, and refuse to install the unit until the safety issue is properly resolved.
Power voltage should be within 90-110% of rated voltage. Insufficient power supply can cause malfunction, electrical shock, or fire.
Installation of an external surge suppressor at the outdoor disconnect is recommended.
If connecting power to fixed wiring, a switch or circuit breaker that disconnects all poles and has a contact separation of at least 1/8in (3mm) must be incorporated in the fixed wiring. The qualified technician must use an approved circuit breaker or switch.
Only connect the unit to an individual branch circuit. Do not connect another appliance to that outlet.
Make sure to properly ground the air conditioner. Every wire must be firmly connected. Loose wiring can cause the terminal to overheat, resulting in product malfunction and possible fire. Do not let wires touch or rest against refrigerant tubing, the compressor, or any moving parts within the unit.
If the unit has an auxiliary electric heater, it must be installed at least 40in (1 meter) away from any combustible materials.
To avoid getting an electric shock, never touch the electrical components soon after the power supply has been turned off. After turning o the power, always wait 10 minutes or more before you touch the electrical components.
Ensure that you do not cross your electrical wiring with your signal wiring. This may cause distortion, interference or possibly damage to circuit boards. No other equipment should be connected to the same power circuit. Connect the outdoor wires before connecting the indoor wires.

WARNING

Before performing any electrical work or working work, turn off the main power to the system.

CONNECTION DIAGRAMS

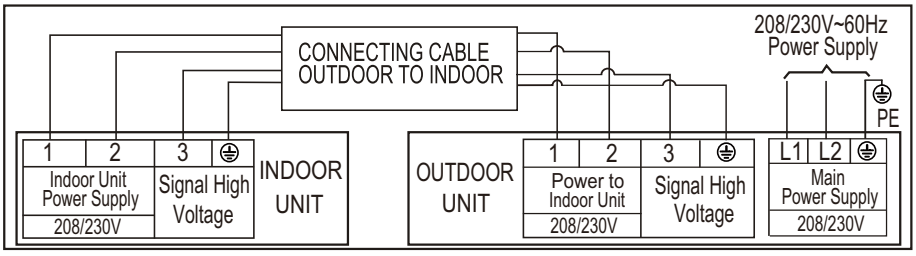

Fig. 22 — Connection Diagram 18K and 24

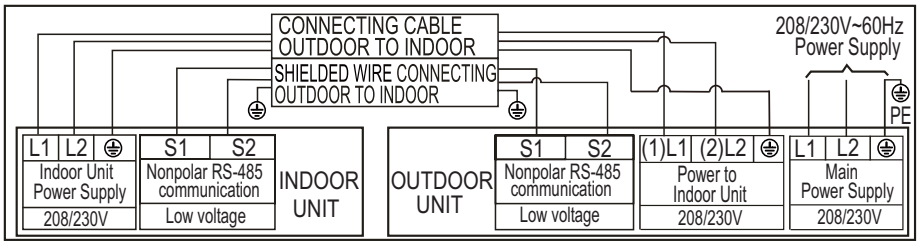

Fig. 23 — Connection Diagram 36K/48K/60K

INDOOR UNIT WIRING

1. Prepare the cable for connection
   a. Using wire strippers, strip the rubber jacket from both ends of the signal cable to reveal about 5.9in(150mm) of the wire.
   b. Strip the insulation from the ends of the wires.
   c. Using a wire crimper, crimp the u-lugs to the ends of the wires.
2. Open the front panel of the indoor unit. Using a screwdriver, remove the cover of the electric control box on your indoor unit.
3. Thread the power cable and the signal cable through the wire outlet.
4. Connect the u-lugs to the terminals. Match the wire colors/labels with the labels on the terminal block. Firmly screw the u-lug of each wire to its corresponding terminal. Refer to the Serial Number and Wiring. Diagram located on the cover of the electric control box.

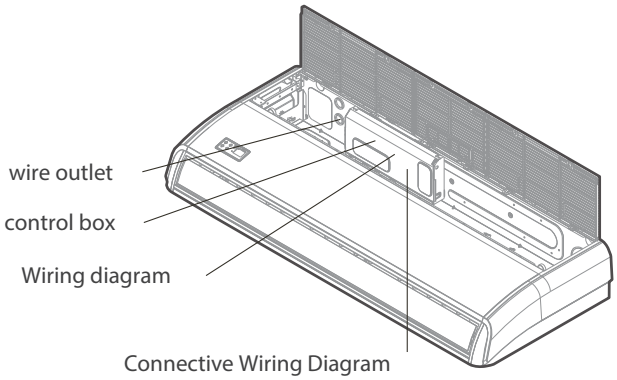

Fig. 24 — Connective Wiring Diagram

Magnetic Ring (if supplied and packed with the accessories)

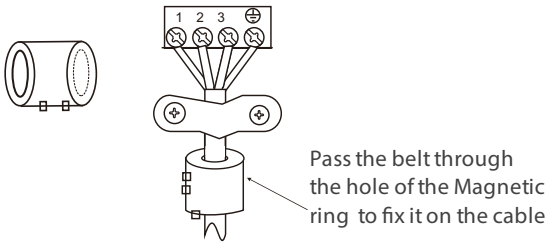

Fig. 25 — Magnetic Ring

⚠ CAUTION

While connecting the wires, strictly adhere to the wiring diagram. The refrigerant circuit can become very hot. Keep the interconnection cable away from the copper tube.

5. Clamp down the cable with the cable clamp. The cable must not be loose or pull on the u-lugs.
6. Reattach the electric box cover.

D. CONNECT THE REFRIGERANT PIPES

⚠ CAUTION

The branching pipe must be installed horizontally. An angle of more than 10° may cause malfunction.
DO NOT install the connecting pipe until both the indoor and outdoor units have been installed. Insulate both the gas and liquid piping to prevent condensation.

1. **Cut the Pipes:** When preparing refrigerant pipes, take extra care to cut and flare them properly. This ensures efficient operation and minimize the need for future maintenance.
   a. Measure the distance between the indoor and outdoor units.
   b. Using a pipe cutter, cut the pipe a little longer than the measured distance.
   c. Ensure the pipe is cut at a perfect 90° angle.

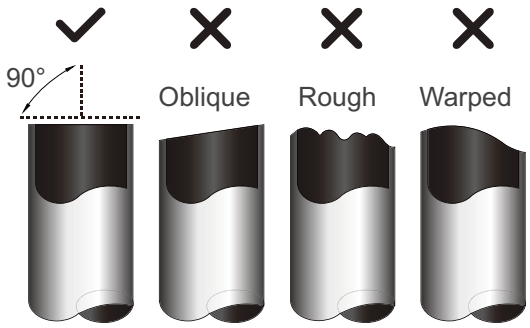

Fig. 26 — Cut Pipe

NOTE: DO NOT DEFORM PIPE WHILE CUTTING. Be sure not to damage, dent, or deform the pipe while cutting. This will drastically reduce the heating.

2. **Remove the Burrs:** Burrs can affect the air-tight seal of refrigerant piping connection. They must be completely removed.
   a. Hold the pipe at a downward angle to prevent burrs from falling into the pipe.
   b. Use a reamer or deburring tool, and remove all burrs from the cut section of the pipe.

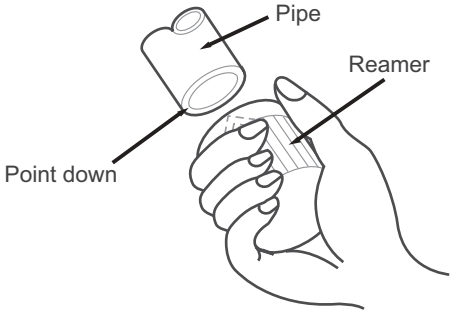

Fig. 27 — Reamer

3. **Flare Pipe Ends:** Proper flaring is essential to achieve an airtight seal.
   a. After removing the burrs from the cut pipe, seal the ends with PVC tape to prevent foreign materials from entering the pipe.
   b. Sheath the pipe with insulating material.
   c. Place flare nuts on both ends of pipe. Ensure they are facing in the right direction, because you can not put them on or change their direction after flaring.

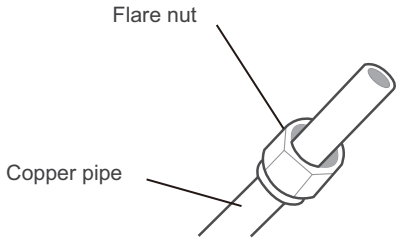

Fig. 28 — Flare Nut

d. Remove PVC tape from ends of pipe when ready to perform flaring work.
e. Clamp flare on the end of the pipe. The end of the pipe must extend beyond the flare form.

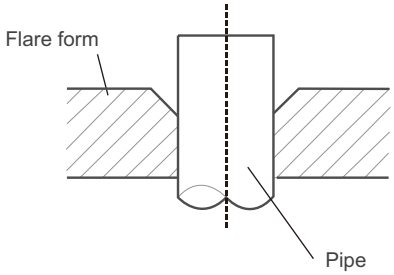

Fig. 29 — Flare

f. Place flaring tool onto the form.
g. Turn the handle of the flaring tool clockwise until the pipe is fully flared.

Table 12 — Piping Extension Beyond Flare Form

PIPE GAUGE	TIGHTENING TORQUE	FLARE DIMENSIONS (A)	FLARE SHAPE
Ø1/4in (Ø6.35mm)	13.27-14.75 lbsf-ft 18-20 N.m	0.33~0.34in (8.4~8.7mm)	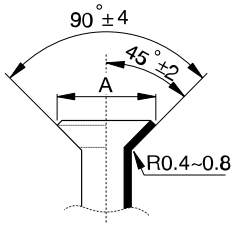
Ø3/8in (Ø9.52mm)	23.6-28.76 lbsf-ft 32-39 N.m	0.52~0.53in (13.2~13.5mm)	
Ø1/2in (Ø12.7mm)	36.14-43.51 lbsf-ft 49-59 N.m	0.64~0.65in (16.2~16.5mm)	

h. Remove the flaring tool and flare form, then inspect the end of the pipe for cracks and even flaring.

4. Connect Pipes: Connect the copper pipes to the indoor unit first, then connect it to the outdoor unit. You should first connect the low-pressure pipe, then the high pressure pipe.
   a. When connecting the flare nuts, apply a thin coat of refrigeration oil to the flared ends of the pipes.
   b. Align the center of the two pipes that you will connect.

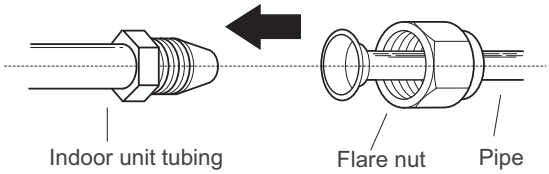

Fig. 30 — Connect the Pipes

c. Tighten the flare nut snugly by hand.
d. Using a wrench, grip the nut on the unit tubing.
e. While firmly gripping the nut, use a torque wrench to tighten the flare nut according to the torque values in Table 12 on page 21.

NOTE: Use both an adjustable wrench and a torque wrench when connecting or disconnecting pipes to/from the unit.

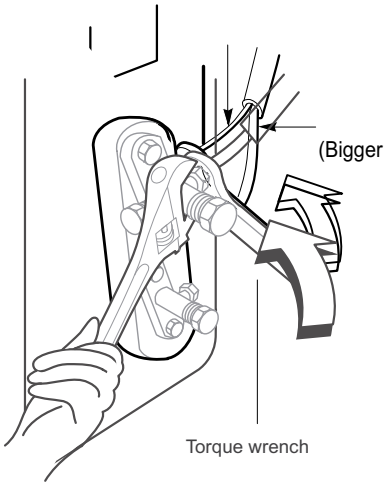

Fig. 31 — Torque Wrench

⚠ CAUTION

Ensure to wrap insulation around the piping.
Direct contact with the bare piping may result in burns or frostbite.
Ensure the pipe is properly connected.
Over tightening may damage the bell mouth and under tightening may lead to leakage.

NOTE: Minimum Bend Radius: Carefully bend the tubing in the middle according to the diagram below. DO NOT bend the tubing more than 90° or more than 3 times.

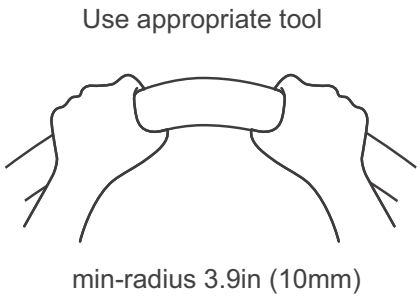

Fig. 32 — Bend Radius

f. After connecting the copper pipes to the indoor unit, wrap the power cable, signal cable and the piping together with binding tape.

NOTE: DO NOT intertwine signal cable with other wires. While bundling these items together. DO NOT intertwine or cross the signal cable with any other wiring.

TROUBLESHOOTING

Table 13 — Error Codes

Display	Malfunction and Protection Indication
EC07	ODU Fan Speed Out of Control
EC51	ODU EEPROM Parameter Error
EC52	ODU Coil Temperature Sensor(T3) error
EC53	ODU Ambient Temperature Sensor (T4) Error
EC54	COMP. Discharge Temperature Sensor (TP) Error
EC56	IDU Coil Temperature Sensor (T2B) Error
ECC1	Other IDU Refrigerant Sensor Detects Leakage (Multi-zone)*
EH00	IDU EEPROM Malfunction
EH03	IDU Fan Speed Out of Control
EH0A	IDU EEPROM Parameter Error
EH0E	Water Level Alarm Malfunction
EH12	Main Unit or Secondary Units Malfunction
EH3A	External Fan DC bus voltage is too low protection
EH3b	External Fan DC bus voltage is too high fault
EH60	IDU Room Temperature (T1) Error
EH61	IDU Coil Temperature Sensor (T2) Error
EHba	Communication Error between the indoor unit and the external fan module
EHC1	Refrigerant Sensor Detects Leakage
EHC2	Refrigerant Sensor is out of range and a leak is detected
EHC3	Refrigerant Sensor is out of range*
EL01	IDU and ODU Communication Error
EL0C	System lacks refrigerant
EL11	Communication Malfunction between the main and secondary units
FH07	IDU lift panel communication failure/IDU opening and closing failure
FHCC	Refrigerant Sensor Error*
PC00	ODU IPM Module Protection
PC01	ODU Voltage Protection
PC02	Compressor To (or IPM Module Protection
PC03	Pressure Protection (Low or High Pressure)
PC04	Inverter Compressor Drive Error
PC0L	Low Ambient Temperate Protection
NOTE: The digital tube will display **FC** in the **FORCED COOLING** mode. **FC is NOT an error code.** *Applicable to the units with refrigerant sensors only.	

Table 14 — Refrigerant Leak Detection Errors

EHC1	Refrigerant Sensor detects a leak
EHC2	Working condition of the refrigerant sensor is out of range and a leak is detected

If you receive one of the codes in Table 14, call a technician as soon as possible. No need to panic, the unit goes into TURBO mode until the error code is cleared. There is a “beep” noise coming from the indoor unit, which is normal in this case.

For additional diagnostic information, refer to the Service Manual.

DUCTLESS START - UP CHECKLIST - Single Zone

Installation Data

Site Address:_____

City:_____ **State:**_____ **Zip Code:**_____

Installing Contractor:_____ **Contractor Contact #:** ( ) _____-_____

Job Name:_____ **Start-up Date:**_____

Distributor:_____

System Details

UNITS	MODEL NO.	SERIAL NO.	CONTROLLER
OUTDOOR UNIT			
INDOOR UNIT A			

Are the outdoor unit and indoor unit compatible? YES:_____ NO:_____

Wiring Electrical

Wire Size and Type Used? AWG:_____ TYPE:_____

Are there any breaks, splices, wire nuts or butt connectors between the outdoor unit and the indoor unit? YES:_____ NO:_____

Was the wiring from the outdoor unit port to the correct indoor unit verified? YES:_____ NO:_____

REMARKS:_____

_____

Voltage Check

Wiring: Single Zone

Outdoor Unit Disconnect	1(L1):GND		Outdoor Unit Terminal Block	1(L1):GND		NOTES:_____
	2(L2):GND			2(L2):GND		
	1(L1):L2(2)			1(L1):2(L2)		
Indoor Unit Voltage Check @ Outdoor Unit	1(L1):GND		Indoor Unit Voltage Check @ Indoor Unit	1(L1):GND		NOTES:_____
	2(L2):GND			2(L2):GND		
	1(L1):2(L2)			1(L1):2(L2)		
	2(L2):3(S)			2(L2):3(S)		

Outdoor Unit Disconnect	1(L1):GND		Outdoor Unit Terminal Block	1(L1):GND		NOTES:_____
	2(L2):GND			2(L2):GND		
	1(L1):L2(2)			1(L1):2(L2)		
Indoor Unit Voltage Check @ Outdoor Unit	1(L1):GND		Indoor Unit Voltage Check @ Indoor Unit	1(L1):GND		NOTES:_____
	2(L2):GND			2(L2):GND		
	1(L1):2(L2)			1(L1):2(L2)		
	2(L2):3(S)			2(L2):3(S)		

Ductless Start-Up Checklist (CONT)

Piping

Leak Check:
System held 500 psig (max. 550psi) for a minimum of 30 minutes using dry nitrogen. YES:_____ NO:_____

Evacuation Method:
- Was the Triple Evacuation Method used as outlined in the installation manual? YES:_____ NO:_____
- Was the Deep Vacuum Method used as outlined in the installation manual? YES:_____ NO:_____
- Did the System Hold 500 microns for 1 hour? YES:_____ NO:_____
- Does the line set match the diameter of the evaporator connections? YES:_____ NO:_____
- For Conventional Fan Coils, does the line set match the outdoor unit size? YES:_____ NO:_____

Single Zone Piping:
Has the liquid pipe length been measured and the additional charge calculated? Size:_____ Length:_____ Charge:_____

NOTES:

NOTE: Final Charge Amount must be recorded!

PORT	LIQUID SIZE		SUCTION SIZE		LENGTH	CHARGE	NOTES:_____
A							

Performance Check

For 1:1 Single Zone Systems: Adjust the set-point to create an operational call for the desired testing operation. Allow the system to run for a minimum of 10 min. and record the following details:

(Operational data recorded on applicable heads with the wireless remote controller's **Point Check** function)

UNIT	SET-POINT	MODE	T1	T2	T3	T4	Tb	Tp	Th	LA/Lr
A										

NOTE:
- T1 - Ambient Space Temperature Sensor
- T2 - IDU Coil Temperature Sensor
- T3 - Outdoor Coil Temperature Sensor
- T4 - Outdoor Ambient Temperature
- Tb - Suction Line Temperature @PMV
- Tp - Discharge Temperature Sensor
- Th - IPM Board Temperature
- LA/Lr - PMV Temperature

Error Codes

Were there any error codes present at start-up? YES:_____ NO:_____

		Notes:
Indoor Unit Error Code:		
Outdoor Unit Error Code:		
Wall Controller:		
24V Interface:		

Comments:

_____

_____

© 2026 Carrier. All rights reserved.