# 48NL-B
# Comfort™ 13.4 SEER2 Single-Packaged Air Conditioner and Gas Furnace System with Puron Advance™ (R-454B) Refrigerant
# Single Phase 2-5 Nominal Tons (Sizes 24-60)
# Three Phase 3-5 Nominal Tons (Sizes 36-60)

# Product Data

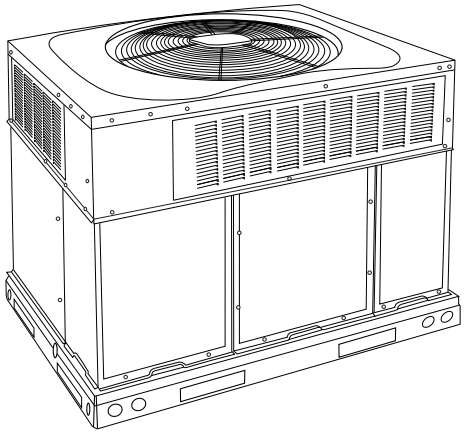

A09033

**Fig. 1 – Unit 48NL**
**(Low NOx Model Available)**

Single-Packaged Products with Energy-Saving Features and R-454B Puron Advance™ refrigerant.

- 13.4 SEER2
- 11.05 EER2
- 81.0% AFUE
- ECM Motor-Standard
- Direct Spark Ignition
- Low Sound Levels
- Dehumidification Feature
- Louvers-Standard
- Cabinet air leakage of 2.0% or less at .5 in. W.C. when tested in accordance with ASHRAE standard 193.
- Refrigerant leak detection dissipation system for added safety
- Maximum allowed elevation is 10,000 ft (3,048m) above sea level

## Features/Benefits

One-piece heating and cooling units with low sound levels, easy installation, low maintenance, and dependable performance.

Puron Advance is Carrier's latest choice of Refrigerant to help meet the 2025 GWP requirement. This unit is designed and tested with Puron Advance and contains a dissipation system.

**Easy Installation**

Factory-assembled package is a compact, fully self-contained, combination gas heating/electric cooling unit that is prewired, pre-piped, and pre-charged for minimum installation expense. These units are available in a variety of standard and optional heating/ cooling size combinations with voltage options to meet residential and light commercial requirements. Units are lightweight and install easily on a rooftop or at ground level. The high tech composite base eliminates rust problems associated with ground level applications.

**Innovative Unit Base Design**

On the inside a high-tech composite material will not rust and incorporates a sloped drain pan which improves drainage and helps inhibit mold, algae and bacterial growth. On the outside metal base rails provide added stability as well as easier handling and rigging.

**Convertible duct configuration**

Unit is designed for use in either downflow or horizontal applications. Each unit is converted from horizontal to downflow and includes two horizontal duct covers. Downflow operation is provided in the field to allow vertical ductwork connections. The basepan seals on the bottom openings to ensure a positive seal in the vertical airflow mode.

**Efficient operation High-efficiency design** offers SEER2 (Seasonal Energy Efficiency Ratios) of 13.4, 11.05 EER2, and AFUE (Annual Fuel Utilization Efficiency) ratings of 81.0%.

**Energy-saving, direct spark ignition** saves gas by operating only when the room thermostat calls for heating. Standard units are furnished with natural gas controls. A low-cost field installed kit for propane conversion is available for all units.

**Low NOx units** meet 40 ng/J NOx emissions. Can be installed in air quality management districts with a 40 ng/J NOx emissions requirement.

**Durable, dependable components**

**Monoport inshot burners** produce precise air-to-gas mixture, which provides for clean and efficient combustion. The large monoport on the inshot (or injection type) burners seldom, if ever, requires cleaning. All gas furnace components are accessible in one compartment.

**Turbo-tubular™ heat exchangers** are constructed of stainless steel for corrosion resistance and optimum heat transfer for improved efficiency. The tubular design permits hot gases to make multiple passes across the path of the supply air.

In addition, dimples located on the heat exchanger walls force the hot gases to stay in close contact with the walls, improving heat transfer.

**ECM Motor** is standard on all models.

**Direct-drive PSC (Permanent Split Capacitor) condenser-fan motors** are designed to help reduce energy consumption and provide for cooling operation down to 40°F (4.4°C) outdoor temperature. low ambient kit is available as a field-installed accessory.

**Refrigerant system** is designed to provide dependability. Liquid filter driers are used to promote clean, unrestricted operation. Each unit leaves the factory with non-ozone depleting and low global warming potential Puron Advance (R-454B) refrigerant charge. Refrigerant service connections make checking operating pressures easier. Factory-installed leak detection dissipation system for added safety.

**High Pressure Switch** provides added reliability for the compressor.

**Indoor and Outdoor coils** are computer-designed for optimum heat transfer and efficiency. The indoor coil is fabricated from aluminum tube and aluminum fins and is located inside the unit for protection against damage. The outdoor coil is internally mounted on the top tier of the unit.

**Low sound ratings** ensure a quiet indoor and outdoor environment with sound ratings as low as 69.0 dBA.

**Easy to service cabinets** provide easy 3-panel accessibility to serviceable components during maintenance and installation. The basepan with integrated drain pan provides easy ground level installation with mounting pad. A nesting feature ensures a positive basepan to roof curb seal when the unit is roof mounted. A convenient 3/4-in. (19.05 mm) wide perimeter flange makes frame mounting on a rooftop easy.

**Standard horizontal metal duct covers** with insulation come with the unit \and cover the horizontal duct openings. These can be left in place if the units are converted to downflow.

**Integrated Gas Control (IGC) board** provides safe and efficient control of heating and simplifies trouble-shooting through its built-in diagnostic function.

**Cabinets** are constructed of heavyduty, phosphated, zinc-coated prepainted steel capable of withstanding 500 hours in salt spray. Interior surfaces of the evaporator/heat exchanger compartment are insulated with cleanable semi-rigid insulation board, which keeps the conditioned air from being affected by the outdoor ambient temperature and provides improved indoor air quality. (Conforms to American Society of Heating, Refrigeration and Air Conditioning Engineers 62.2.) The sloped drain pan minimizes standing water in the drain. An external drain is provided.

## Limited Warranty*

- Default 5-year parts limited warranty
  - 10-year parts limited warranty with timely registration. Equipment must be registered within 90 days of original installation, except in jurisdictions where warranty benefits cannot be conditioned on registration.

* Applies to original purchaser/homeowner and 5 years to subsequent owners.

- Default 5-year on compressor limited warranty
  - 10-year on compressor limited warranty with timely registration. Equipment must be registered within 90 days of original installation, except in jurisdictions where warranty benefits cannot be conditioned on registration.

* Applies to original purchaser/homeowner and 5 years to subsequent owners.

- Default 20-year stainless steel heat exchanger limited warranty
  - Life stainless steel limited warranty with timely registration. Equipment must be registered within 90 days of original installation, except in jurisdictions where warranty benefits cannot be conditioned on registration.

* Applies to original purchaser/homeowner and 5 years to subsequent owners. See warranty certificate for complete details and restrictions.

## Table of Contents

Features/Benefits . . . . . 1
Model Number Nomenclature . . . . . 3
AHRI Capacities. . . . . 5
Unit Dimensions. . . . . 10
Performance Data . . . . . 14
Application Data. . . . . 29
Electrical Data . . . . . 30
Connection Wiring Schematic 208/230-1-60 . . . . . 31
Connection Wiring Schematic 208/230-3-60 . . . . . 33
Connection Wiring Schematic 460-3-60 . . . . . 35
Controls. . . . . 37
Guide Specifications. . . . . 38

**Manufacturer reserves the right to change, at any time, specifications and designs without notice and without obligations.**

## Model Number Nomenclature

48NL – B 24 040 3 0

Type of Unit
48NL - Single Packaged Air Conditioner and Gas Furnace System

Low NOx Indicator
- Standard
N - Low NOx

Major Series

Nominal Cooling Capacity
024 - 2.0 Tons
030 - 2.5 Tons
036 - 3.0 Tons
042 - 3.5 Tons
048 - 4.0 Tons
060 - 5.0 Tons

Heat Input Size (Btuh)
040 - 40,000
060 - 60,000
090 - 90,000
115 - 115,000
130 - 127,000

Electrical Supply
3 - 208/230-1-60
5 - 208/230-3-60
6 - 460-3-60

Minor Series

Use of the AHRI Certified TM Mark indicates a manufacturer's participation in the program For verification of certification for individual products, go to www.ahridirectory.org.

For California Residents:

This furnace does not comply with SCAQMD Rule 1111, SJVAPCD Rule 4905, or BAAQMD 9-4, which places a NOx emission limit of 14 ng/J. Therefore, this unit is not eligible to be installed in the South Coast Air Quality Management District (SCAQMD), San Joaquin Valley Air Pollution Control District (SJVAPCD), or Bay Area Air Quality Management District (BAAQMD).

| SAP ORDERING NO. | NOMINAL COOLING CAPACITY (Btuh) | NOMINAL HEATING INPUT (Btuh) | VOLTS-PHASE (60 HZ) | APPROX SHIP WT (LB) |
|---|---|---|---|---|
| 48NL-B240403 | 24,000 | 40,000 | 208/230-1 | 339 |
| 48NL-B240603 | 24,000 | 60,000 | 208/230-1 | 339 |
| 48NL-B300403 | 30,000 | 40,000 | 208/230-1 | 348 |
| 48NL-B300603 | 30,000 | 60,000 | 208/230-1 | 348 |
| 48NL-B360603 | 36,000 | 60,000 | 208/230-1 | 410 |
| 48NL-B360605 | 36,000 | 60,000 | 208/230-3 | 410 |
| 48NL-B360606 | 36,000 | 60,000 | 460-3 | 410 |
| 48NL-B360903 | 36,000 | 90,000 | 208/230-1 | 410 |
| 48NL-B360905 | 36,000 | 90,000 | 208/230-3 | 410 |
| 48NL-B360906 | 36,000 | 90,000 | 460-3 | 410 |
| 48NL-B420603 | 42,000 | 60,000 | 208/230-1 | 438 |
| 48NL-B420605 | 42,000 | 60,000 | 208/230-3 | 438 |
| 48NL-B420606 | 42,000 | 60,000 | 460-3 | 438 |
| 48NL-B420903 | 42,000 | 90,000 | 208/230-1 | 438 |
| 48NL-B420905 | 42,000 | 90,000 | 208/230-3 | 438 |
| 48NL-B420906 | 42,000 | 90,000 | 460-3 | 438 |
| 48NL-B480903 | 48,000 | 90,000 | 208/230-1 | 491 |
| 48NL-B480905 | 48,000 | 90,000 | 208/230-3 | 491 |
| 48NL-B480906 | 48,000 | 90,000 | 460-3 | 491 |
| 48NL-B481153 | 48,000 | 115,000 | 208/230-1 | 491 |
| 48NL-B481155 | 48,000 | 115,000 | 208/230-3 | 491 |
| 48NL-B481156 | 48,000 | 115,000 | 460-3 | 491 |
| 48NL-B481303 | 48,000 | 127,000 | 208/230-1 | 491 |
| 48NL-B481305 | 48,000 | 127,000 | 208/230-3 | 491 |
| 48NL-B481306 | 48,000 | 127,000 | 460-3 | 491 |
| 48NL-B600903 | 60,000 | 90,000 | 208/230-1 | 496 |
| 48NL-B600905 | 60,000 | 90,000 | 208/230-3 | 496 |
| 48NL-B600906 | 60,000 | 90,000 | 460-3 | 496 |
| 48NL-B601153 | 60,000 | 115,000 | 208/230-1 | 496 |
| 48NL-B601155 | 60,000 | 115,000 | 208/230-3 | 496 |
| 48NL-B601156 | 60,000 | 115,000 | 460-3 | 496 |
| 48NL-B601303 | 60,000 | 127,000 | 208/230-1 | 496 |
| 48NL-B601305 | 60,000 | 127,000 | 208/230-3 | 496 |
| 48NL-B601306 | 60,000 | 127,000 | 460-3 | 496 |

**Manufacturer reserves the right to change, at any time, specifications and designs without notice and without obligations.**

| SAP ORDERING NO. | NOMINAL COOLING CAPACITY (Btuh) | NOMINAL HEATING INPUT (Btuh) | VOLTS-PHASE (60 HZ) | APPROX SHIP WT (LB) |
|---|---|---|---|---|
| Low NOx Units | | | | |
| 48NLNB240403 | 24,000 | 40,000 | 208/230-1 | 339 |
| 48NLNB240603 | 24,000 | 60,000 | 208/230-1 | 339 |
| 48NLNB300403 | 30,000 | 40,000 | 208/230-1 | 348 |
| 48NLNB300603 | 30,000 | 60,000 | 208/230-1 | 348 |
| 48NLNB360603 | 36,000 | 60,000 | 208/230-1 | 410 |
| 48NLNB360605 | 36,000 | 60,000 | 208/230-3 | 410 |
| 48NLNB360606 | 36,000 | 60,000 | 460-3 | 410 |
| 48NLNB360903 | 36,000 | 89,000 | 208/230-1 | 410 |
| 48NLNB360905 | 36,000 | 90,000 | 208/230-3 | 410 |
| 48NLNB360906 | 36,000 | 90,000 | 460-3 | 410 |
| 48NLNB420603 | 42,000 | 60,000 | 208/230-1 | 438 |
| 48NLNB420605 | 42,000 | 60,000 | 208/230-3 | 438 |
| 48NLNB420606 | 42,000 | 60,000 | 460-3 | 438 |
| 48NLNB420903 | 42,000 | 90,000 | 208/230-1 | 438 |
| 48NLNB420905 | 42,000 | 90,000 | 208/230-3 | 438 |
| 48NLNB420906 | 42,000 | 90,000 | 460-3 | 438 |
| 48NLNB480903 | 48,000 | 90,000 | 208/230-1 | 491 |
| 48NLNB480905 | 48,000 | 90,000 | 208/230-3 | 491 |
| 48NLNB480906 | 48,000 | 90,000 | 460-3 | 491 |
| 48NLNB481153 | 48,000 | 115,000 | 208/230-1 | 491 |
| 48NLNB481155 | 48,000 | 115,000 | 208/230-3 | 491 |
| 48NLNB481156 | 48,000 | 115,000 | 460-3 | 491 |
| 48NLNB481303 | 48,000 | 127,000 | 208/230-1 | 491 |
| 48NLNB481305 | 48,000 | 127,000 | 208/230-3 | 491 |
| 48NLNB481306 | 48,000 | 127,000 | 460-3 | 491 |
| 48NLNB600903 | 60,000 | 90,000 | 208/230-1 | 496 |
| 48NLNB600905 | 60,000 | 90,000 | 208/230-3 | 496 |
| 48NLNB600906 | 60,000 | 90,000 | 460-3 | 496 |
| 48NLNB601153 | 60,000 | 115,000 | 208/230-1 | 496 |
| 48NLNB601155 | 60,000 | 115,000 | 208/230-3 | 496 |
| 48NLNB601156 | 60,000 | 115,000 | 460-3 | 496 |
| 48NLNB601303 | 60,000 | 127,000 | 208/230-1 | 496 |
| 48NLNB601305 | 60,000 | 127,000 | 208/230-3 | 496 |
| 48NLNB601306 | 60,000 | 127,000 | 460-3 | 496 |

**Manufacturer reserves the right to change, at any time, specifications and designs without notice and without obligations.**

# AHRI* Capacities

## Cooling Capacities and Efficiencies

| UNIT SIZE | NOMINAL TONS | STANDARD CFM | COOLING CAPACITY (BTUH)† | EER2‡ | SEER2** |
|---|---|---|---|---|---|
| 24 | 2 | 750 | 23200 | 11.05 | 13.4 |
| 30 | 2.5 | 950 | 28800 | 11.05 | 13.4 |
| 36 | 3 | 1150 | 34400 | 11.05 | 13.4 |
| 42 | 3.5 | 1350 | 40000 | 11.05 | 13.4 |
| 48 | 4 | 1600 | 46000 | 11.05 | 13.4 |
| 60 | 5 | 1750 | 56000 | 11.05 | 13.4 |

*. Air Conditioning, Heating & Refrigeration Institute.
† Rated in accordance with U.S. Government DOE Department of Energy) test procedures and/or AHRI Standards 210/240.
‡ At "A" conditions-80°F (26.7°C) indoor db/67°F (19.4°C) indoor wb & 95°F (35°C) outdoor db.
** Rated in accordance with AHRI Standard 270.
Notes:
1. Ratings are net values, reflecting the effects of circulating fan heat.
Ratings are based on:
Cooling Standard: 80°F (26.7°C) db, 67°F wb (19.4°C) indoor entering-air temperature and 95°F db (35°C) outdoor entering-air temperature.
2. Before purchasing this appliance, read important energy cost and efficiency information available from your retailer.
LEGEND
dB-Sound Levels (decibels)
db—Dry Bulb
SEER2—Seasonal Energy Efficiency Ratio
wb—Wet Bulb
COP-Coefficient of Performance

## Gas Heating Capacities and Efficiencies

| UNIT SIZE | HEATING INPUT (Btuh) | OUTPUT CAPACITY (Btuh) | TEMPERATURE RISE RANGE °F (°C) | AFUE (%) |
|---|---|---|---|---|
| 24040<br>30040 | 40,000 | 33,000 | 25-55<br>(14-31) | 81.0 |
| 24060<br>30060<br>36060<br>42060 | 60,000 | 49,000 | 25-55<br>(14-31) | 81.0 |
| 36090<br>42090<br>48090<br>60090 | 90,000 | 73,000<br>74,000<br>74,000<br>74,000 | 35-65<br>(19-36) | 81.0 |
| 48115<br>60115 | 115,000 | 94,000 | 30-60<br>(17-33) | 81.0 |
| 48130<br>60130 | 127,000 | 104,000 | 35-65<br>(19-36) | 81.0 |

LEGEND
AFUE—Annual Fuel Utilization Efficiency
NOTE: Before purchasing this appliance, read important energy cost and efficiency information available from your retailer.

## A-Weighted Sound Power Level

| UNIT SIZE | STANDARD RATING (dBA) | TYPICAL OCTAVE BAND SPECTRUM (dBA without tone adjustment) | | | | | | |
|---|---|---|---|---|---|---|---|---|
| | | 125 | 250 | 500 | 1000 | 2000 | 4000 | 8000 |
| 24 | 69 | 59 | 62 | 63 | 63 | 61 | 57 | 53 |
| 30 | 73 | 59 | 63 | 67 | 70 | 64 | 60 | 56 |
| 36 | 75 | 66 | 69 | 71 | 67 | 64 | 60 | 55 |
| 42 | 74 | 60 | 63 | 68 | 70 | 65 | 60 | 55 |
| 48 | 75 | 61 | 64 | 68 | 71 | 66 | 64 | 58 |
| 60 | 75 | 61 | 66 | 71 | 67 | 65 | 61 | 54 |

NOTE: Tested in compliance with AHRI 270 but not listed with AHRI.

## Physical Data

| UNIT SIZE | 24040 | 24060 | 30040 | 30060 | 36060 | 36090 | 42060 | 42090 |
|---|---|---|---|---|---|---|---|---|
| NOMINAL CAPACITY (ton) | 2 | 2 | 2-1/2 | 2-1/2 | 3 | 3 | 3-1/2 | 3-1/2 |
| SHIPPING WEIGHT lb. | 339 | 339 | 348 | 348 | 410 | 410 | 438 | 438 |
| SHIPPING WEIGHT (kg) | 154 | 154 | 158 | 158 | 186 | 186 | 199 | 199 |
| COMPRESSOR / QUANTITY | Scroll / 1 | | | | | | | |
| REFRIGERANT (R-454B) | | | | | | | | |
| Quantity lb. | 4.25 | | 4.85 | | 6.25 | | 5.25 | |
| Quantity (kg) | 1.9 | | 2.2 | | 2.8 | | 2.4 | |
| REFRIGERANT METERING DEVICE | Orifice | | | | | | | |
| MINIMUM CONDITIONED SPACE AREA (sq. ft.) | 76 | | 76 | | 106 | | 91 | |
| ORIFICE ID in. / mm | .055 / 1.40 | | .061 / 1.55 | | .065 / 1.65 | | .070 / 1.78 | |
| OUTDOOR COIL | | | | | | | | |
| Rows...Fins/in. | 1...21 | 1...21 | 1...21 | 1...21 | 1...21 | 1...21 | 1...21 | 1...21 |
| Face Area (sq ft) | 11.9 | 11.9 | 13.6 | 13.6 | 13.6 | 13.6 | 13.6 | 13.6 |
| OUTDOOR FAN | | | | | | | | |
| Nominal CFM | 2500 | 2500 | 3200 | 3200 | 3500 | 3500 | 3500 | 3500 |
| Diameter in. | 24 | 24 | 24 | 24 | 26 | 24 | 26 | 26 |
| Diameter (mm) | 609.6 | 609.6 | 609.6 | 609.6 | 660.4 | 609.6 | 660.4 | 660.4 |
| Motor Hp (Rpm) | 1/12 (810) | 1/12 (810) | 1/5 (810) | 1/5 (810) | 1/2 (810) | 1/2 (810) | 3/4 (810 | 3/4 (810) |
| INDOOR COIL | | | | | | | | |
| Rows...Fins/in. | 3...17 | 3...17 | 3...17 | 3...17 | 2...17 | 2...17 | 3...17 | 3...17 |
| Face Area (sq ft) | 3.7 | 3.7 | 3.7 | 3.7 | 5.6 | 5.6 | 4.7 | 4.7 |
| INDOOR BLOWER | | | | | | | | |
| Required Minimum Dissipation Airflow (CFM) | 133 | 133 | 133 | 133 | 186 | 186 | 160 | 160 |
| Nominal Cooling Airflow (CFM) | 750 | 750 | 950 | 950 | 1150 | 1150 | 1350 | 1350 |
| Size in. (D x W) | 10x10 | 10x10 | 10x10 | 10x10 | 11x10 | 11x10 | 11x10 | 11x10 |
| Size mm (D x W) | 254x254 | 254x254 | 254x254 | 254x254 | 279.4x254 | 279.4x254 | 279.4x254 | 279.4x254 |
| Motor HP (RPM) | 1/2 (1050) | 1/2 (1050) | 1/2 (1050) | 1/2 (1050) | 3/4 (1000) | 3/4 (1000) | 1/2 (1050) | 1/2 (1050) |
| FURNACE SECTION* | | | | | | | | |
| Burner Orifice No. (Qty...Drill Size) | | | | | | | | |
| Natural Gas (Factory Installed) | 2...44 | 3...44 | 2...44 | 3...44 | 3...44 | 3...38 | 3...44 | 3...38 |
| Propane Gas | 2...55 | 3...55 | 2...55 | 3...55 | 3...55 | 3...53 | 3...55 | 3...53 |
| HIGH-PRESSURE SWITCH (psig) Cut-out Reset (Auto) | 650 +/- 15<br>420 +/- 25 | | | | | | | |
| LOSS-OF-CHARGE / LOW-PRESSURE SWITCH (Liquid Line) (psig) cut-out Reset (auto) | NA | | | | | | | |
| RETURN-AIR FILTERS† Throwaway Size in. (mm) | 2 each 20x12x1<br>508x305x25 | | | | 1 each 24x16x1, 24x18x1<br>610x406x25, 610x457x25 | | 1 each 24x14x1, 24x16x1<br>610x356x25, 610x406x25 | |

*. Based on altitude of 0 to 2000 ft (0-610 m).

†. Required filter sizes shown are based on the larger of the AHRI (Air Conditioning Heating and Refrigeration Institute) rated cooling airflow or the heating airflow velocity of 300 to 350 ft/minute for throwaway type. Air filter pressure drop for non-standard filters must not exceed 0.08 IN. W.C.

**Manufacturer reserves the right to change, at any time, specifications and designs without notice and without obligations.**

## Physical Data (Continued)

| UNIT SIZE | 48090 | 48115 | 48130 | 60090 | 60115 | 60130 |
|---|---|---|---|---|---|---|
| NOMINAL CAPACITY (ton) | 4 | 4 | 4 | 5 | 5 | 5 |
| SHIPPING WEIGHT lb<br>SHIPPING WEIGHT kg | 491<br>223 | 491<br>223 | 491<br>223 | 496<br>225 | 496<br>225 | 496<br>225 |
| COMPRESSOR / QUANTITY | Scroll / 1 | | | | | |
| REFRIGERANT (R-454B)<br>Quantity lb<br>Quantity (kg.) | | 6.55<br>3.0 | | | 8.5<br>3.9 | |
| MINIMUM CONDITIONED SPACE AREA (sq. ft.) | | 106 | | | 137 | |
| REFRIGERANT METERING DEVICE | | Orifice | | | TXV | |
| ORIFICE ID in./mm | | .078 / 1.98 | | | N/A | |
| OUTDOOR COIL<br>Rows...Fins/in.<br>Face Area (sq ft) | 1...21<br>21.4 | 1...21<br>21.4 | 1...21<br>21.4 | 2...21<br>17.5 | 2...21<br>17.5 | 2...21<br>17.5 |
| OUTDOOR FAN<br>Nominal CFM<br>Diameter in.<br>Diameter (mm)<br>Motor Hp (Rpm) | 3500<br>26<br>660.4<br>1/5 (810) | 3500<br>26<br>660.4<br>1/5 (810) | 3500<br>26<br>660.4<br>1/5 (810) | 3500<br>26<br>660.4<br>1/5 (810) | 3500<br>26<br>660.4<br>1/5 (810) | 3500<br>26<br>660.4<br>1/5 (810) |
| INDOOR COIL<br>Rows...Fins/in.<br>Face Area (sq ft) | 3...17<br>5.6 | 3...17<br>5.6 | 3...17<br>5.6 | 3...17<br>5.6 | 3...17<br>5.6 | 3...17<br>5.6 |
| INDOOR BLOWER<br>Required Minimum Dissipation Airflow (CFM)<br>Nominal Cooling Airflow (CFM)<br>Size in. . (D x W)<br>Size mm (D x W)<br>Motor HP (RPM) | 186<br>1600<br>11x10<br>279.4x254<br>1.0 (1075) | 186<br>1600<br>11x10<br>279.4x254<br>1.0 (1075) | 186<br>1600<br>11x10<br>279.4x254<br>1.0 (1075) | 239<br>1750<br>11x10<br>279.4x254<br>1.0 (1040) | 239<br>1750<br>11x10<br>279.4x254<br>1.0 (1040) | 239<br>1750<br>11x10<br>279.4x254<br>1.0 (1040) |
| FURNACE SECTION*<br>Burner Orifice No. (Qty...Drill Size)<br>Natural Gas (Factory Installed)<br>Propane Gas | 3...38<br>3...53 | 3...33<br>3...51 | 3...31<br>3...49 | 3...31<br>3...49 | 3...31<br>3...49 | 3...31<br>3...49 |
| HIGH-PRESSURE SWITCH<br>(psig) Cut-out Reset (Auto) | 650 +/- 15<br>420 +/- 25 | | | | | |
| LOSS-OF CHARGE / LOW-PRESSURE<br>SWITCH (Liquid Line) (psig) cut-out Reset (auto) | N/A | | | | | |
| RETURN-AIR FILTERS Throwaway† in.<br>mm | 1 each 24x16x1, 24x18x1<br>610x406x25, 610x457x25 | | | | | |

*. Based on altitude of 0 to 2000 ft (0-610 m).

†. Required filter sizes shown are based on the larger of the AHRI (Air Conditioning Heating and Refrigeration Institute) rated cooling airflow or the heating airflow velocity of 300 to 350 ft/minute for throwaway type. Air filter pressure drop for non-standard filters must not exceed 0.08 IN. W.C.

## Accessory Kit Filter Sizes (Shipped With Kit)

| Kit | Filter 1 Size | Filter 2 Size |
|---|---|---|
| CPFILTRK007A00 | 12"x20"x1" | 12"x20"x1" |
| CPFILTRK008A00 | 14"x24"x1" | 16"x24"x1" |
| CPFILTRK009A00 | 16"x24"x1" | 18"x24"x1" |
| CPMANDPR007A00 | 12"x20"x1" | 12"x20"x1" |
| CPMANDPR008A00 | 14"x24"x1" | 16"x24"x1" |
| CPMANDPR009A00 | 16"x24"x1" | 18"x24"x1" |
| CPECOMZR007B00 | 10"x20"x1" | 10"x20"x1" |
| CPECOMZR008A00 | 14"x24"x1" | 16"x24"x1" |
| CPECOMZR009A00 | 16"x24"x1" | 18"x24"x1" |
| CPECOMZR010B00 | 12"x20"x1" | 12"x20"x1" |
| CPECOMZR011B00 | 14"x20"x1" | 16"x20"x1" |
| CPECOMZR012B00 | 16"x20"x1" | 18"x20"x1" |

**Manufacturer reserves the right to change, at any time, specifications and designs without notice and without obligations.**

## Accessories

| AREA | DESCRIPTION | PART NO. | USED WITH |
|---|---|---|---|
| Curbs and Duct Connections | Flat Roof Curbs, 14" High (-011 Kit may be used with 36-60 sizes with overhang) | CPRFCURB011B00 | 24-30 |
| | | CPRFCURB013B00 | 36-60 |
| | Adapter Curb for 2008 and earlier roofcurb with 2009 and later baserail units | CPADCURB001A00 | 24-30 |
| | | CPADCURB002A00 | 36-60 |
| | Gasket Kit for 2008 and earlier roofcurb with 2009 and later baserail units | CPGSKTKIT001A00 | All |
| | Square to Round (1 set of 2, use with horizontal duct flanges) | CPDUCFLG002A00 | 24-48 |
| Internal Filter Racks/Economizers/ Dampers | Economizer - Vertical, Gear-driven, Outdoor dry bulb sensor, Filter Rack with 1" filters | CPECOMZR007B00 | 24-30 |
| | | CPECOMZR008A00 | 42 |
| | | CPECOMZR009A00 | 36, 48-60 |
| | Economizer - Horizontal, Gear-driven, Outdoor dry bulb sensor, Filter Rack with 1" filters | CPECOMZR010B00 | 24-30 |
| | | CPECOMZR011B00 | 42 |
| | | CPECOMZR012B00 | 36, 48-60 |
| | Outdoor Enthalpy Control (Replaces outdoor dry bulb sensor in economizer kit) | AXB078ENT | All |
| | Manual Outside Air Damper (Includes filter rack and 1" filters, same as CPFILTRK kit) | CPMANDPR007A00 | 24-30 |
| | | CPMANDPR008A00 | 42 |
| | | CPMANDPR009A00 | 36, 48-60 |
| | Internal Filter Rack (Includes 1" filters) | CPFILTRK007A00 | 24-30 |
| | | CPFILTRK008A00 | 42 |
| | | CPFILTRK009A00 | 36, 48-60 |
| AC Accessories | 240V Crankcase Heater (Factory-Installed on 208/230 VAC-3 phase units) | CPCRKHTR008A00 | 24-36 |
| | | CPCRKHTR004A00 | 42-60 |
| | Low Ambient Control (Pressure Switch) | KSALA0301410 | All |
| | Low Pressure Switch | CPLPSCTL001A00 | All |
| | Time Guard II (5 minute compressor delay anti-short cycle protection. Some non-corporate thermostats do not have short cycle protection, for which use of this accessory is recommended.) | CRTIMEGD001A00 | All |
| | PTC Compressor Start Assist Kit (For single phase units only) | CPHSTART002A00 | All |
| Gas Heat Accessories | Natural to LP Conversion Kit (0 - 2000 ft) | CPLPCONV013C00 | All (Except Ultra Low NOx) |
| | Natural to LP Conversion Kit (2001 - 6000 ft) | CPLPCONV014C00 | All (Except Ultra Low NOx) |
| | LP to Natural Gas Conversion Kit (0 - 2000 ft) | CPNGCONV004C00 | All (Except Ultra Low NOx) |
| | Flue Discharge Deflector Assembly | CPFLUEDS001A00 | All |

**Manufacturer reserves the right to change, at any time, specifications and designs without notice and without obligations.**

# ECONOMIZER

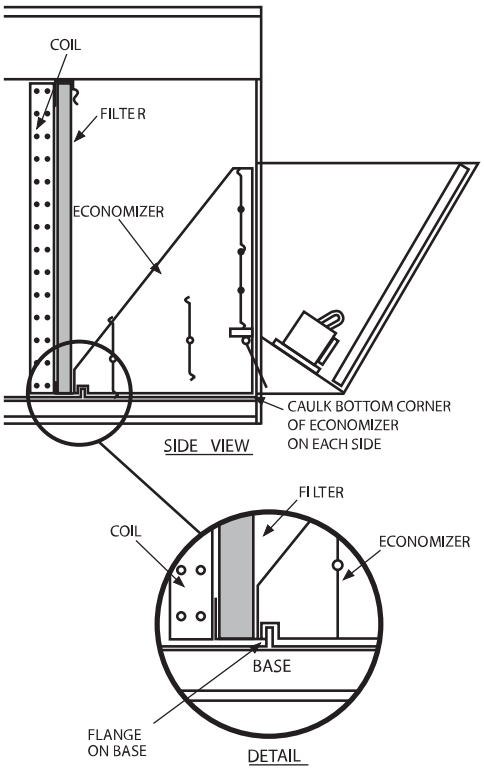


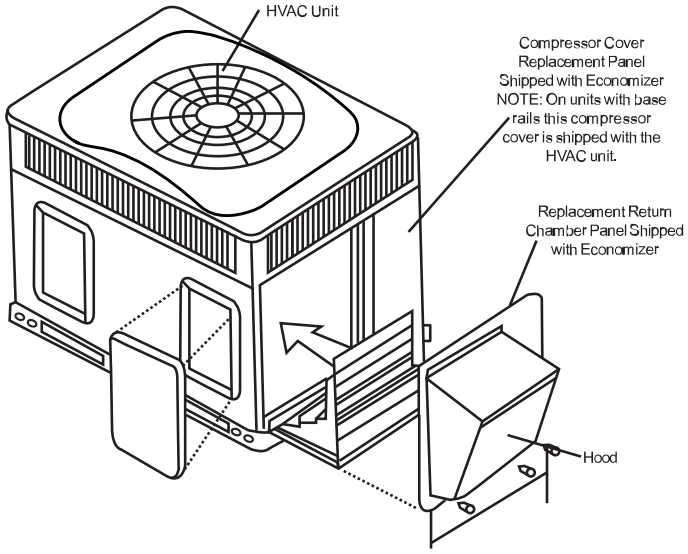


Vertical Economizer

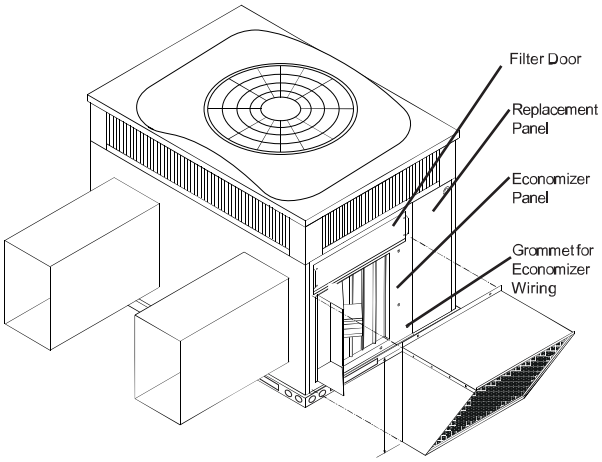


Horizontal Economizer

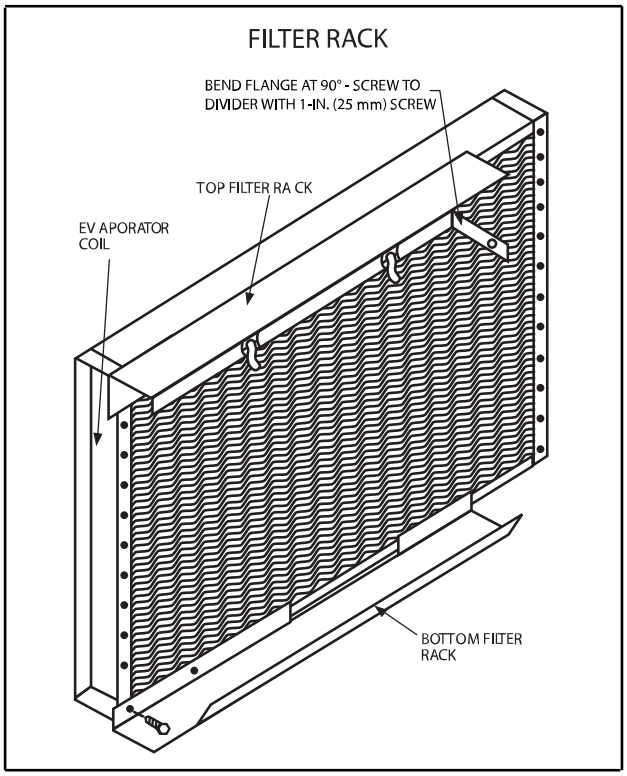


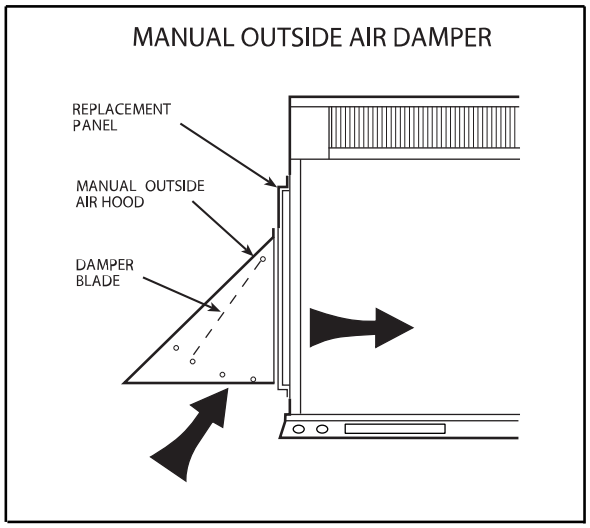


A09375

# Unit Dimensions

## 24-30

| COOLING CAPACITY | UNIT WT. | | UNIT HEIGHT | | CENTER OF GRAVITY | | | | | |
|---|---|---|---|---|---|---|---|---|---|---|
| | LB | KG | "A" in | "A" mm | "X" in | "X" mm | "Y" in | "Y" mm | "Z" in | "Z" mm |
| 24 | 328.0 | 148.8 | 41.0 | 1041 | 22.8 | 579.4 | 15.3 | 388.9 | 15.7 | 398.5 |
| 30 | 337.0 | 152.9 | 43.0 | 1092 | 22.8 | 579.4 | 15.3 | 388.9 | 15.7 | 401.6 |

| UNIT | CORNER WEIGHT | | | | | |
|---|---|---|---|---|---|---|
| | "1" LB | "1" KG | "2" LB | "2" KG | "3" LB | "3" KG | "4" LB | "4" KG |
| 24 | 49.0 | 22.3 | 66.0 | 29.8 | 98.0 | 44.6 | 115.0 | 52.1 |
| 30 | 51.0 | 22.9 | 67.0 | 30.6 | 101.0 | 45.9 | 118.0 | 53.5 |

**REQUIRED CLEARANCES TO COMBUSTIBLE MATL.**

| | INCHES [MM] |
|---|---|
| TOP OF UNIT | 14 [355.6] |
| DUCT SIDE OF UNIT | 14 [355.6] |
| SIDE OPPOSITE DUCTS | 14 [355.6] |
| BOTTOM OF UNIT | 0 [0.0] |
| ELECTRICAL PANEL | 36 [914.4] |

**NEC. REQUIRED CLEARANCES.**

| | INCHES [MM] |
|---|---|
| BETWEEN UNITS, POWER ENTRY SIDE | 42 [1066.8] |
| UNIT AND UNGROUNDED SURFACES, POWER ENTRY SIDE | 36 [914.0] |
| UNIT AND BLOCK OR CONCRETE WALLS AND OTHER GROUNDED SURFACES, POWER ENTRY SIDE | 42 [1066.8] |

**REQUIRED CLEARANCE FOR OPERATION AND SERVICING**

| | INCHES [MM] |
|---|---|
| EVAP. COIL ACCESS SIDE | 36 [914.0] |
| POWER ENTRY SIDE (EXCEPT FOR NEC REQUIREMENTS) | 42 [1066.8] |
| UNIT TOP | 48 [1219.2] |
| SIDE OPPOSITE DUCTS | 36 [914.0] |
| DUCT PANEL | 12 [304.8]* |

*MINIMUM DISTANCES:IF UNIT IS PLACED LESS THAN 12 [304.8] FROM WALL SYSTEM,THEN SYSTEM PERFORMANCE MAYBE COMPROMISED.

DIMENSIONS IN [] ARE IN MILLIMETERS

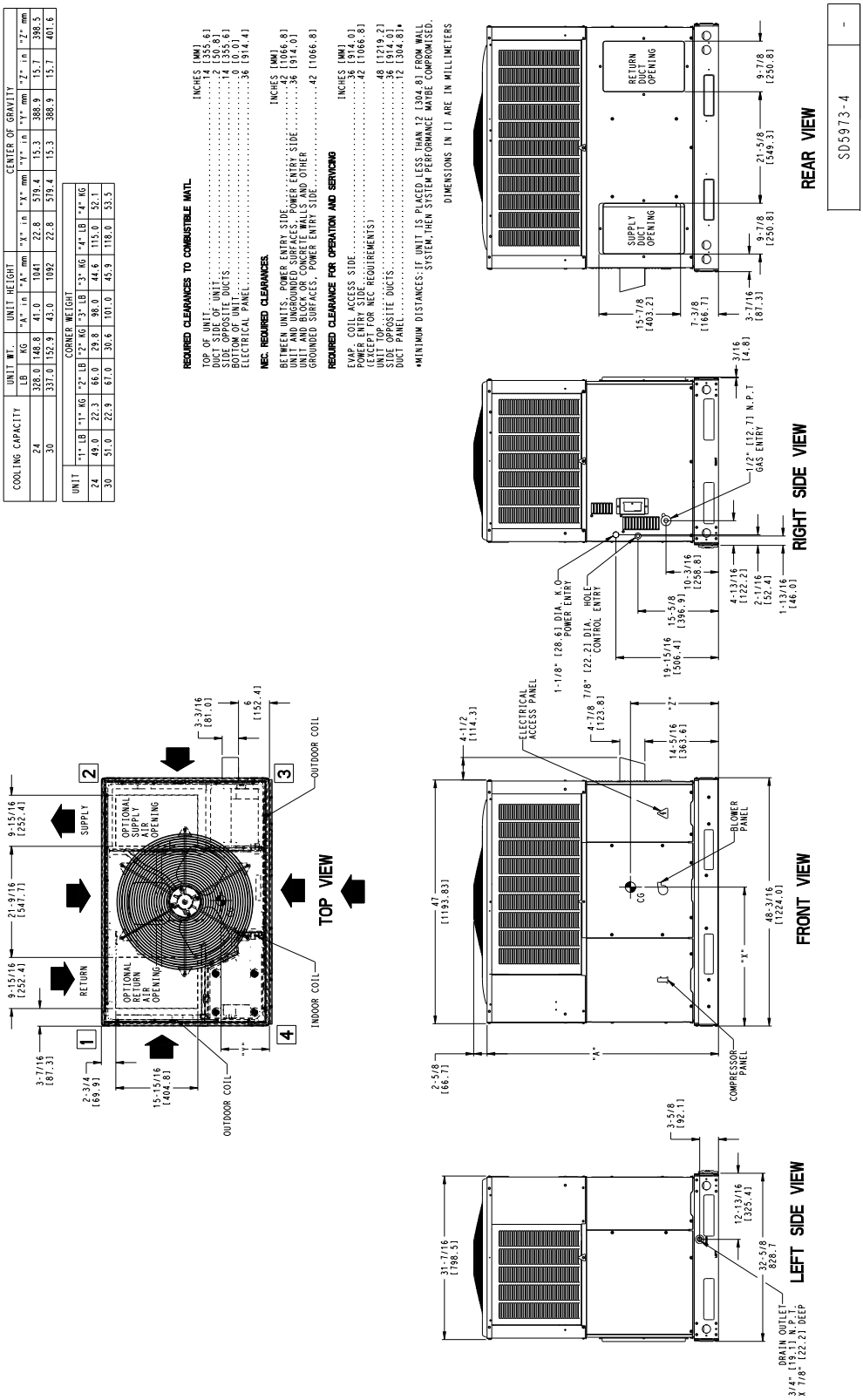

# Unit Dimensions

## 36-60

| COOLING CAPACITY | UNIT WT. | | UNIT HEIGHT | | CENTER OF GRAVITY | | | | | |
|---|---|---|---|---|---|---|---|---|---|---|
| | LB | KG | "A" in | "A" mm | "X" in | "X" mm | "Y" in | "Y" mm | "Z" in | "Z" mm |
| 36 | 396.0 | 179.7 | 43.0 | 1092 | 22.8 | 579.4 | 18.0 | 457.2 | 17.1 | 435.0 |
| 42 | 424.0 | 192.4 | 43.0 | 1092 | 22.8 | 579.4 | 18.0 | 457.2 | 17.1 | 435.0 |
| 48 | 477.0 | 216.4 | 51.0 | 1295 | 22.8 | 579.4 | 18.0 | 457.2 | 17.6 | 447.7 |
| 60 | 482.0 | 218.7 | 47.0 | 1194 | 22.8 | 579.4 | 18.0 | 457.2 | 17.6 | 447.7 |

CORNER WEIGHT

| UNIT | "1" LB | "1" KG | "2" LB | "2" KG | "3" LB | "3" KG | "4" LB | "4" KG |
|---|---|---|---|---|---|---|---|---|
| 36 | 59.0 | 27.0 | 79.0 | 35.9 | 119.0 | 53.9 | 139.0 | 62.9 |
| 42 | 64.0 | 28.9 | 85.0 | 38.5 | 127.0 | 57.7 | 148.0 | 67.3 |
| 48 | 72.0 | 32.5 | 95.0 | 43.3 | 143.0 | 64.9 | 167.0 | 75.7 |
| 60 | 72.0 | 32.8 | 96.0 | 43.7 | 145.0 | 65.6 | 169.0 | 76.5 |

**REQUIRED CLEARANCES TO COMBUSTIBLE MAT'L.**

| | INCHES [MM] |
|---|---|
| TOP OF UNIT | 14 [355.6] |
| DUCT SIDE OF UNIT | 2 [50.8] |
| SIDE OPPOSITE DUCTS | 14 [355.6] |
| BOTTOM OF UNIT | 0 [0.0] |
| ELECTRICAL PANEL | 36 [914.4] |

**NEC. REQUIRED CLEARANCES.**

| | INCHES [MM] |
|---|---|
| BETWEEN UNITS, POWER ENTRY SIDE | 42 [1066.8] |
| UNIT AND UNGROUNDED SURFACES, POWER ENTRY SIDE | 36 [914.0] |
| UNIT AND BLOCK OR CONCRETE WALLS AND OTHER GROUNDED SURFACES, POWER ENTRY SIDE | 42 [1066.8] |

**REQUIRED CLEARANCE FOR OPERATION AND SERVICING**

| | INCHES [MM] |
|---|---|
| EVAP. COIL ACCESS SIDE | 36 [914.0] |
| POWER ENTRY SIDE (EXCEPT FOR NEC REQUIREMENTS) | 42 [1066.8] |
| UNIT TOP | 48 [1219.2] |
| SIDE OPPOSITE DUCTS | 36 [914.0] |
| DUCT PANEL | 12 [304.8]* |

*MINIMUM DISTANCES IF UNIT IS PLACED LESS THAN 12 [304.8] FROM WALL SYSTEM THEN SYSTEM PERFORMANCE MAYBE COMPROMISED.

DIMENSIONS IN [] ARE IN MILLIMETERS

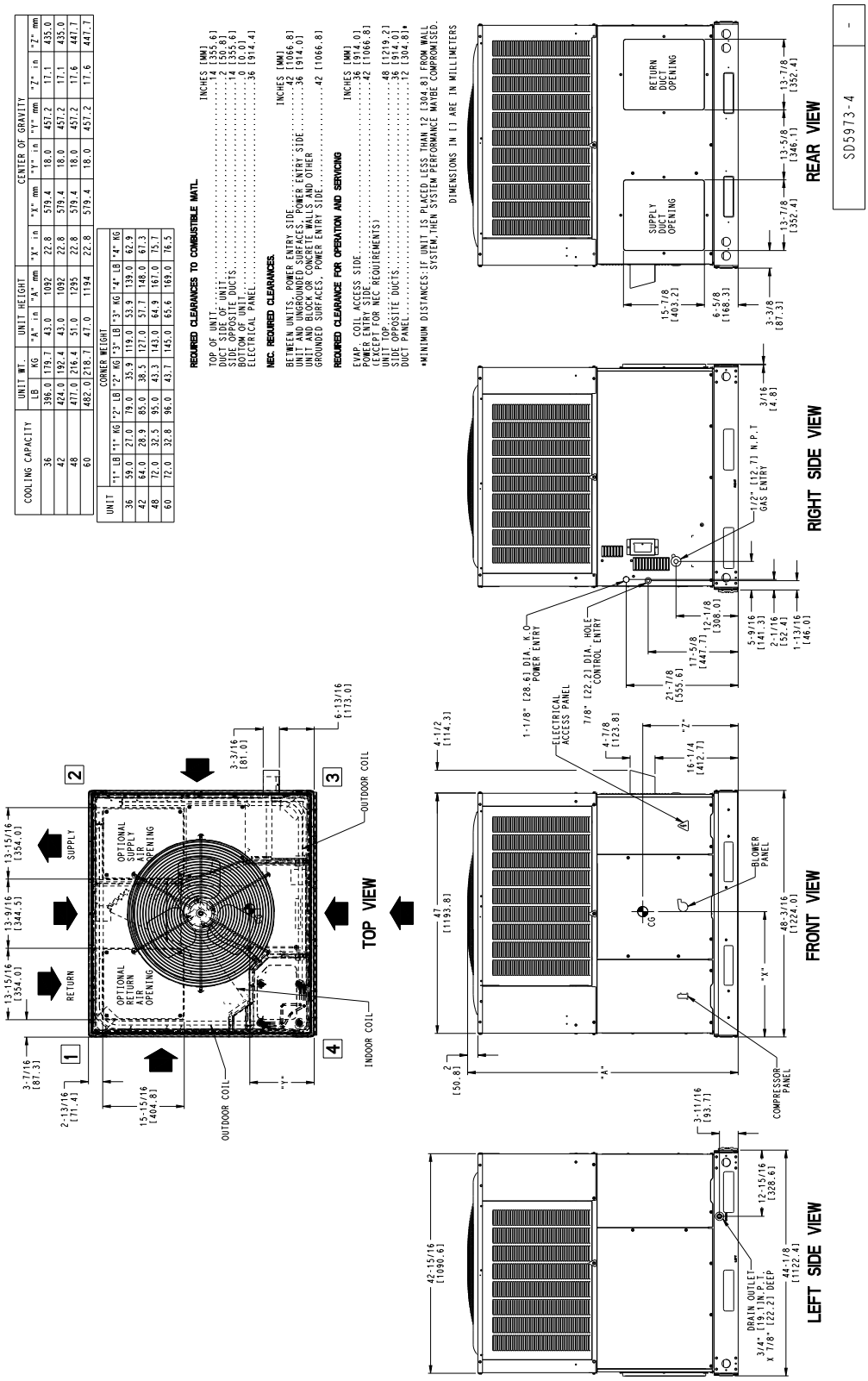


A230477

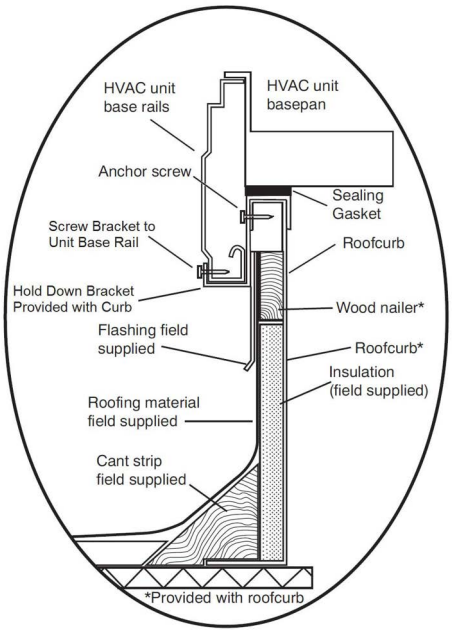


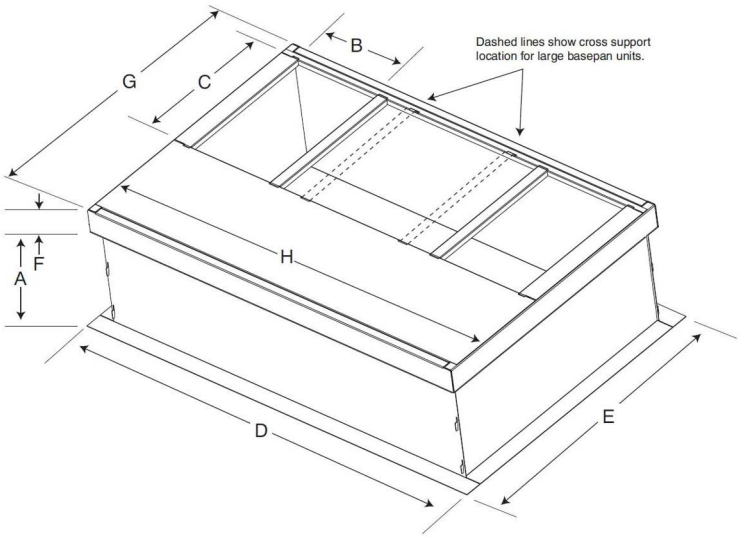


SMALL/COMMON CURB

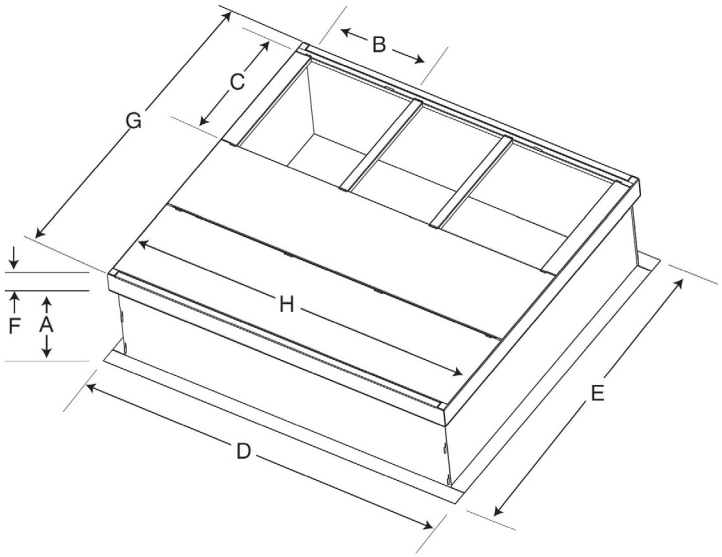


LARGE CURB

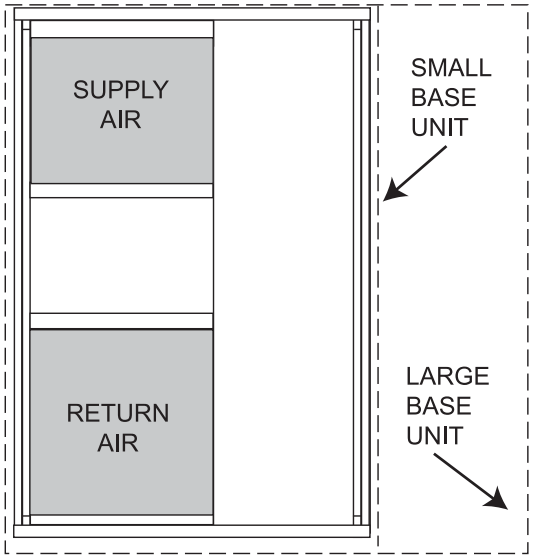


UNIT PLACEMENT ON COMMON CURB

SMALL OR LARGE BASE UNIT

A180216

## Accessory Dimensions

| UNIT SIZE | CATALOG NUMBER | A IN. (mm) | B (small / common base) IN. (mm)* | B (large base) IN. (mm)* | C IN. (mm) | D IN. (mm) | E IN. (mm) | F IN. (mm) | G IN. (mm) | H IN. (mm) |
|---|---|---|---|---|---|---|---|---|---|---|
| Small or Large | CPRFCURB011B00 | 14 (356) | 10 (254) | 14 (356) | 16 (406) | 47.8 (1214) | 32.4 (822) | 2.7 (69) | 30.6 (778) | 46.1 (1170) |
| Large | CPRFCURB013B00 | 14 (356) | 14 (356) | | | | 43.9 (1116) | | 42.2 (1072) | |

* Part Number CPRCURB011B00 can be used on both small and large basepan units. The cross supports must be located based on whether the unit is a small basepan or a large basepan.

NOTES:
Roof curb must be set up for unit being installed.
Seal strip must be applied, as required, to unit being installed.
Roof curb is made of 16-gauge steel.
Attach ductwork to curb (flanges of duct rest on curb).
Insulated panels: 1-in. (25.4 mm) thick fiberglass 1 lb. density.

## Selection Procedure (With Example)

**DETERMINE COOLING AND HEATING REQUIREMENTS AT DESIGN CONDITIONS:**

Given:

Required Cooling Capacity (TC) ..... 46,000 Btuh
Sensible Heat Capacity (SHC) ..... 34,000 Btuh
Required Heating Capacity ..... 72,000 Btuh
Condenser Entering Air Temperature ..... 95°F (35°C)
Indoor-Air Temperature ..... 80°F (27°C) edb 67°F (19°C) ewb
Evaporator Air Quantity ..... 1600 CFM
External Static Pressure ..... 0.440 IN. W.C.
Electrical Characteristics ..... 208-1-60

**SELECT UNIT BASED ON REQUIRED COOLING CAPACITY**

Enter Performance Data table at condenser entering temperature of 95°F (35°C). Unit 48 at 1600 CFM and 67°F (19°C) ewb (entering wet bulb) will provide a total capacity of 46,000 Btuh and a SHC of 34,700 Btuh. Calculate SHC correction, if required, using Note 4 under Cooling Capacities tables.

**SELECT ELECTRIC HEAT**

In the Gas Heating Capacities and Efficiencies table, note that the 48090 unit will provide 74,000 Btuh with an input of 90,000 Btuh.

**DETERMINE FAN SPEED AND POWER REQUIREMENTS AT DESIGN CONDITIONS.**

Before entering the air delivery tables, calculate the total static pressure required. From the given example, the Wet Coil Pressure Drop Table, and the Filter Pressure Drop Table:

| | |
|---|---|
| External Static Pressure | 0.300 IN. W.C |
| Filter | 0.060 IN. W.C |
| Wet Coil Pressure Drop | 0.070 IN. W.C |
| Total Static Pressure | 0.43 IN. W.C |

Enter the table for Dry Coil Air Delivery—At 0.43 IN. W.C. ESP (external static pressure) and MED speed the motor delivers between 1664 CFM and 1627 cfm. Interpolation estimates 1653 CFM at .43 IN. W.C. Thus, MED delivers CFM needed.

**SELECT UNIT THAT CORRESPONDS TO POWER SOURCE AVAILABLE.**

The Electrical Data Table shows that the unit is designed to operate at 208-1-60.

Manufacturer reserves the right to change, at any time, specifications and designs without notice and without obligations.

# Performance Data

## 24 Size

| EVAPORATOR AIR | | CONDENSER ENTERING AIR TEMPEREATURES °F (°C) | | | | | | | | | | | | | | | | | |
|---|---|---|---|---|---|---|---|---|---|---|---|---|---|---|---|---|---|---|---|
| | | 75 (23.9) | | | 85 (29.4) | | | 95 (35) | | | 105 (40.6) | | | 115 (46.1) | | | 125 (51.7) | | |
| CFM / | EWB | Capacity MBtuh | | Total | Capacity MBtuh | | Total | Capacity MBtuh | | Total | Capacity MBtuh | | Total | Capacity MBtuh | | Total | Capacity MBtuh | | Total |
| BF | °F(°C) | Total | Sens | Sys KW | Total | Sens | Sys KW | Total | Sens | Sys KW | Total | Sens | Sys KW | Total | Sens | Sys KW | Total | Sens | Sys KW |
| 700 / .08 | 57 (13.8) | 23.8 | 23.8 | 1.6 | 23.0 | 23.0 | 1.8 | 21.9 | 21.9 | 2.0 | 19.3 | 19.3 | 2.2 | 17.8 | 17.8 | 2.4 | 16.3 | 16.3 | 2.7 |
| | 62 (16.6) | 24.8 | 22.2 | 1.6 | 23.7 | 21.7 | 1.8 | 22.6 | 20.5 | 2.0 | 19.9 | 18.9 | 2.2 | 18.3 | 17.5 | 2.4 | 16.7 | 16.0 | 2.7 |
| | 63*(17.2) | 25.3 | 17.9 | 1.6 | 24.1 | 17.3 | 1.8 | 22.8 | 16.8 | 2.0 | 19.8 | 16.1 | 2.2 | 18.1 | 15.4 | 2.4 | 16.1 | 14.9 | 2.7 |
| | 67(19.4) | 27.2 | 18.7 | 1.6 | 25.9 | 18.1 | 1.8 | 24.5 | 17.5 | 2.0 | 22.0 | 16.8 | 2.2 | 20.3 | 16.1 | 2.4 | 18.4 | 15.5 | 2.7 |
| | 72 (22.2) | 29.6 | 14.9 | 1.7 | 28.3 | 14.3 | 1.8 | 26.7 | 13.7 | 2.0 | 23.3 | 13.1 | 2.2 | 21.3 | 12.4 | 2.5 | 19.1 | 11.8 | 2.8 |
| 750 / .08 | 57 (13.8) | 23.4 | 22.6 | 1.6 | 22.6 | 21.3 | 1.8 | 21.6 | 20.0 | 2.0 | 19.0 | 18.4 | 2.2 | 17.5 | 17.0 | 2.5 | 16.0 | 15.6 | 2.7 |
| | 62 (16.6) | 23.7 | 21.6 | 1.6 | 22.6 | 21.1 | 1.8 | 21.6 | 20.0 | 2.0 | 19.0 | 18.4 | 2.2 | 17.5 | 17.0 | 2.5 | 16.0 | 15.6 | 2.7 |
| | 63*(17.2) | 23.9 | 17.5 | 1.6 | 22.9 | 16.9 | 1.8 | 21.6 | 16.3 | 2.0 | 18.8 | 15.7 | 2.2 | 17.1 | 15.0 | 2.5 | 15.3 | 14.5 | 2.7 |
| | 67(19.4) | 25.8 | 18.2 | 1.7 | 24.6 | 17.6 | 1.8 | 23.2 | 17.0 | 2.0 | 20.9 | 16.3 | 2.2 | 19.3 | 15.6 | 2.5 | 17.4 | 15.1 | 2.7 |
| | 72 (22.2) | 28.1 | 14.6 | 1.7 | 26.8 | 13.9 | 1.8 | 25.4 | 13.4 | 2.0 | 22.1 | 12.7 | 2.3 | 20.2 | 12.0 | 2.5 | 18.1 | 11.5 | 2.8 |
| 900 / .09 | 57 (13.8) | 25.9 | 25.7 | 1.7 | 25.0 | 24.3 | 1.8 | 23.8 | 22.8 | 2.0 | 21.0 | 21.0 | 2.3 | 19.3 | 19.3 | 2.5 | 17.7 | 17.7 | 2.8 |
| | 62 (16.6) | 26.2 | 24.9 | 1.7 | 25.0 | 24.1 | 1.8 | 23.8 | 22.8 | 2.0 | 21.0 | 21.0 | 2.3 | 19.3 | 19.3 | 2.5 | 17.7 | 17.7 | 2.8 |
| | 63*(17.2) | 26.4 | 19.9 | 1.7 | 25.2 | 19.3 | 1.8 | 23.8 | 18.6 | 2.0 | 20.7 | 17.9 | 2.3 | 18.9 | 17.1 | 2.5 | 16.9 | 16.6 | 2.8 |
| | 67(19.4) | 28.4 | 20.7 | 1.7 | 27.1 | 20.1 | 1.9 | 25.6 | 19.4 | 2.1 | 23.1 | 18.6 | 2.3 | 21.3 | 17.8 | 2.5 | 19.2 | 17.2 | 2.8 |
| | 72 (22.2) | 31.0 | 16.6 | 1.7 | 29.6 | 15.8 | 1.9 | 28.0 | 15.3 | 2.1 | 24.4 | 14.5 | 2.3 | 22.3 | 13.7 | 2.5 | 20.0 | 13.1 | 2.8 |

See Notes on page 17.

# Performance Data

## 30 Size

| EVAPORATOR AIR | | CONDENSER ENTERING AIR TEMPEREATURES °F (°C) | | | | | | | | | | | | | | | | | |
|---|---|---|---|---|---|---|---|---|---|---|---|---|---|---|---|---|---|---|---|
| | | 75 (23.9) | | | 85 (29.4) | | | 95 (35) | | | 105 (40.6) | | | 115 (46.1) | | | 125 (51.7) | | |
| CFM / | EWB | Capacity MBtuh | | Total | Capacity MBtuh | | Total | Capacity MBtuh | | Total | Capacity MBtuh | | Total | Capacity MBtuh | | Total | Capacity MBtuh | | Total |
| BF | °F(°C) | Total | Sens | Sys KW | Total | Sens | Sys KW | Total | Sens | Sys KW | Total | Sens | Sys KW | Total | Sens | Sys KW | Total | Sens | Sys KW |
| 875 / .09 | 57 (13.8) | 29.2 | 29.2 | 2.0 | 28.2 | 28.2 | 2.2 | 26.9 | 26.9 | 2.4 | 22.9 | 22.9 | 2.7 | 21.3 | 21.3 | 2.9 | 19.5 | 19.5 | 3.1 |
| | 62 (16.6) | 30.3 | 27.6 | 2.0 | 29.0 | 27.0 | 2.2 | 27.6 | 25.5 | 2.4 | 23.5 | 22.7 | 2.7 | 21.9 | 21.5 | 2.9 | 20.0 | 19.5 | 3.1 |
| | 63*(17.2) | 30.9 | 22.3 | 2.0 | 29.5 | 21.6 | 2.2 | 27.9 | 20.8 | 2.4 | 23.5 | 19.6 | 2.7 | 21.6 | 19.2 | 2.9 | 19.3 | 18.1 | 3.1 |
| | 67(19.4) | 33.3 | 23.2 | 2.0 | 31.8 | 22.5 | 2.2 | 30.0 | 21.7 | 2.5 | 26.4 | 20.6 | 2.7 | 24.6 | 20.0 | 2.9 | 22.2 | 19.1 | 3.1 |
| | 72 (22.2) | 36.3 | 18.6 | 2.0 | 34.6 | 17.7 | 2.2 | 32.8 | 17.1 | 2.5 | 27.7 | 15.9 | 2.7 | 25.6 | 15.4 | 2.9 | 22.8 | 14.3 | 3.1 |
| 950 / .10 | 57 (13.8) | 29.1 | 28.4 | 2.0 | 28.1 | 26.8 | 2.2 | 26.8 | 25.2 | 2.5 | 22.8 | 22.4 | 2.7 | 21.3 | 21.3 | 2.9 | 19.4 | 19.2 | 3.1 |
| | 62 (16.6) | 29.4 | 27.3 | 2.0 | 28.1 | 26.6 | 2.2 | 26.8 | 25.2 | 2.5 | 22.8 | 22.4 | 2.7 | 21.3 | 21.3 | 2.9 | 19.4 | 19.2 | 3.1 |
| | 63*(17.2) | 29.7 | 22.0 | 2.0 | 28.4 | 21.3 | 2.2 | 26.8 | 20.6 | 2.5 | 22.6 | 19.3 | 2.7 | 20.8 | 18.9 | 2.9 | 18.5 | 17.9 | 3.1 |
| | 67(19.4) | 32.0 | 22.9 | 2.0 | 30.5 | 22.2 | 2.2 | 28.8 | 21.4 | 2.5 | 25.3 | 20.3 | 2.7 | 23.6 | 19.7 | 2.9 | 21.3 | 18.8 | 3.1 |
| | 72 (22.2) | 34.8 | 18.3 | 2.1 | 33.3 | 17.5 | 2.3 | 31.5 | 16.9 | 2.5 | 26.6 | 15.7 | 2.7 | 24.6 | 15.2 | 2.9 | 22.0 | 14.1 | 3.2 |
| 1125 / .11 | 57 (13.8) | 31.7 | 31.7 | 2.1 | 30.6 | 30.2 | 2.3 | 29.1 | 28.3 | 2.5 | 24.9 | 24.9 | 2.8 | 23.2 | 23.2 | 3.0 | 21.1 | 21.1 | 3.2 |
| | 62 (16.6) | 32.0 | 31.0 | 2.1 | 30.6 | 29.9 | 2.3 | 29.2 | 28.3 | 2.5 | 24.9 | 24.9 | 2.8 | 23.2 | 23.2 | 3.0 | 21.1 | 21.1 | 3.2 |
| | 63*(17.2) | 32.4 | 24.8 | 2.1 | 30.9 | 23.9 | 2.3 | 29.2 | 23.1 | 2.5 | 24.6 | 21.7 | 2.8 | 22.6 | 21.3 | 3.0 | 20.2 | 20.1 | 3.2 |
| | 67(19.4) | 34.8 | 25.8 | 2.1 | 33.3 | 24.9 | 2.3 | 31.4 | 24.1 | 2.6 | 27.6 | 22.9 | 2.8 | 25.7 | 22.2 | 3.0 | 23.2 | 21.2 | 3.2 |
| | 72 (22.2) | 38.0 | 20.6 | 2.1 | 36.3 | 19.7 | 2.3 | 34.3 | 19.0 | 2.6 | 29.0 | 17.6 | 2.8 | 26.8 | 17.1 | 3.0 | 23.9 | 15.9 | 3.2 |

See Notes on page 17.

Manufacturer reserves the right to change, at any time, specifications and designs without notice and without obligations.

# Performance Data

## 36 Size

| EVAPORATOR AIR | | CONDENSER ENTERING AIR TEMPEREATURES °F (°C) | | | | | | | | | | | | | | | | | |
|---|---|---|---|---|---|---|---|---|---|---|---|---|---|---|---|---|---|---|---|
| | | 75 (23.9) | | | 85 (29.4) | | | 95 (35) | | | 105 (40.6) | | | 115 (46.1) | | | 125 (51.7) | | |
| CFM / BF | EWB °F(°C) | Capacity MBtuh Total | Capacity MBtuh Sens | Total Sys KW | Capacity MBtuh Total | Capacity MBtuh Sens | Total Sys KW | Capacity MBtuh Total | Capacity MBtuh Sens | Total Sys KW | Capacity MBtuh Total | Capacity MBtuh Sens | Total Sys KW | Capacity MBtuh Total | Capacity MBtuh Sens | Total Sys KW | Capacity MBtuh Total | Capacity MBtuh Sens | Total Sys KW |
| 1050 / .10 | 57 (13.8) | 34.6 | 34.6 | 2.4 | 33.4 | 33.4 | 2.7 | 31.8 | 31.8 | 3.0 | 27.4 | 27.4 | 3.3 | 25.3 | 25.3 | 3.5 | 23.1 | 23.1 | 3.8 |
| | 62 (16.6) | 35.9 | 33.0 | 2.4 | 34.3 | 32.2 | 2.7 | 32.7 | 30.5 | 3.0 | 28.2 | 27.1 | 3.3 | 26.0 | 25.5 | 3.5 | 23.7 | 23.3 | 3.8 |
| | 63*(17.2) | 36.6 | 26.6 | 2.4 | 35.0 | 25.8 | 2.7 | 33.0 | 24.9 | 3.0 | 28.1 | 23.4 | 3.3 | 25.6 | 22.9 | 3.5 | 22.8 | 21.7 | 3.8 |
| | 67(19.4) | 39.4 | 27.8 | 2.5 | 37.6 | 26.9 | 2.7 | 35.5 | 25.9 | 3.0 | 31.6 | 24.6 | 3.3 | 29.1 | 23.9 | 3.5 | 26.3 | 22.8 | 3.8 |
| | 72 (22.2) | 42.9 | 22.2 | 2.5 | 41.0 | 21.2 | 2.7 | 38.8 | 20.4 | 3.0 | 33.2 | 19.0 | 3.3 | 30.3 | 18.4 | 3.6 | 27.1 | 17.1 | 3.8 |
| 1150 / .11 | 57 (13.8) | 34.7 | 34.3 | 2.5 | 33.5 | 32.3 | 2.7 | 32.0 | 30.4 | 3.0 | 27.6 | 27.0 | 3.3 | 25.4 | 25.4 | 3.6 | 23.2 | 23.2 | 3.8 |
| | 62 (16.6) | 35.1 | 32.9 | 2.5 | 33.5 | 32.1 | 2.7 | 32.0 | 30.4 | 3.0 | 27.6 | 27.0 | 3.3 | 25.4 | 25.4 | 3.6 | 23.2 | 23.2 | 3.8 |
| | 63*(17.2) | 35.5 | 26.5 | 2.5 | 33.9 | 25.7 | 2.7 | 32.0 | 24.8 | 3.0 | 27.2 | 23.3 | 3.3 | 24.8 | 22.8 | 3.6 | 22.1 | 21.6 | 3.8 |
| | 67(19.4) | 38.2 | 27.6 | 2.5 | 36.5 | 26.7 | 2.7 | 34.4 | 25.8 | 3.0 | 30.6 | 24.5 | 3.3 | 28.2 | 23.8 | 3.6 | 25.5 | 22.7 | 3.8 |
| | 72 (22.2) | 41.6 | 22.1 | 2.5 | 39.7 | 21.1 | 2.8 | 37.6 | 20.3 | 3.1 | 32.1 | 18.9 | 3.3 | 29.3 | 18.3 | 3.6 | 26.2 | 17.0 | 3.9 |
| 1350 / .12 | 57 (13.8) | 37.5 | 37.5 | 2.5 | 36.2 | 36.1 | 2.8 | 34.5 | 33.8 | 3.1 | 29.8 | 29.8 | 3.4 | 27.4 | 27.4 | 3.6 | 25.0 | 25.0 | 3.9 |
| | 62 (16.6) | 37.9 | 37.1 | 2.5 | 36.2 | 35.8 | 2.8 | 34.6 | 33.8 | 3.1 | 29.8 | 29.8 | 3.4 | 27.4 | 27.4 | 3.6 | 25.0 | 25.0 | 3.9 |
| | 63*(17.2) | 38.4 | 29.6 | 2.5 | 36.6 | 28.6 | 2.8 | 34.6 | 27.7 | 3.1 | 29.4 | 26.0 | 3.4 | 26.8 | 25.4 | 3.6 | 23.9 | 23.9 | 3.9 |
| | 67(19.4) | 41.2 | 30.8 | 2.6 | 39.4 | 29.8 | 2.8 | 37.2 | 28.8 | 3.1 | 33.1 | 27.4 | 3.4 | 30.5 | 26.5 | 3.6 | 27.5 | 25.3 | 3.9 |
| | 72 (22.2) | 45.0 | 24.7 | 2.6 | 42.9 | 23.6 | 2.8 | 40.6 | 22.7 | 3.1 | 34.7 | 21.1 | 3.4 | 31.7 | 20.4 | 3.7 | 28.3 | 19.0 | 3.9 |

See Notes on page 17.

# Performance Data

## 42 Size

| EVAPORATOR AIR | | CONDENSER ENTERING AIR TEMPEREATURES °F (°C) | | | | | | | | | | | | | | | | | |
|---|---|---|---|---|---|---|---|---|---|---|---|---|---|---|---|---|---|---|---|
| | | 75 (23.9) | | | 85 (29.4) | | | 95 (35) | | | 105 (40.6) | | | 115 (46.1) | | | 125 (51.7) | | |
| CFM / BF | EWB °F(°C) | Capacity MBtuh Total | Capacity MBtuh Sens | Total Sys KW | Capacity MBtuh Total | Capacity MBtuh Sens | Total Sys KW | Capacity MBtuh Total | Capacity MBtuh Sens | Total Sys KW | Capacity MBtuh Total | Capacity MBtuh Sens | Total Sys KW | Capacity MBtuh Total | Capacity MBtuh Sens | Total Sys KW | Capacity MBtuh Total | Capacity MBtuh Sens | Total Sys KW |
| 1225 / .09 | 57 (13.8) | 40.0 | 40.0 | 2.8 | 38.6 | 38.6 | 3.0 | 36.8 | 36.8 | 3.4 | 31.7 | 31.7 | 3.7 | 29.2 | 29.2 | 4.0 | 26.6 | 26.6 | 4.3 |
| | 62 (16.6) | 41.5 | 38.8 | 2.8 | 39.6 | 37.8 | 3.0 | 37.8 | 35.8 | 3.4 | 32.6 | 31.8 | 3.7 | 30.0 | 29.5 | 4.0 | 27.4 | 26.9 | 4.3 |
| | 63*(17.2) | 42.3 | 31.3 | 2.8 | 40.4 | 30.2 | 3.0 | 38.2 | 29.2 | 3.4 | 32.5 | 27.5 | 3.7 | 29.6 | 26.9 | 4.0 | 26.4 | 25.5 | 4.3 |
| | 67(19.4) | 45.5 | 32.6 | 2.8 | 43.5 | 31.5 | 3.1 | 41.0 | 30.4 | 3.4 | 36.5 | 28.9 | 3.7 | 33.6 | 28.0 | 4.0 | 30.4 | 26.8 | 4.3 |
| | 72 (22.2) | 49.6 | 26.1 | 2.8 | 47.4 | 24.9 | 3.1 | 44.8 | 24.0 | 3.4 | 38.3 | 22.3 | 3.7 | 35.0 | 21.6 | 4.0 | 31.3 | 20.1 | 4.3 |
| 1350 / .10 | 57 (13.8) | 40.4 | 40.4 | 2.8 | 39.0 | 38.2 | 3.1 | 37.2 | 35.8 | 3.4 | 32.0 | 31.9 | 3.7 | 29.5 | 29.5 | 4.0 | 26.9 | 26.9 | 4.3 |
| | 62 (16.6) | 40.8 | 38.8 | 2.8 | 39.0 | 37.9 | 3.1 | 37.2 | 35.8 | 3.4 | 32.0 | 31.9 | 3.7 | 29.5 | 29.5 | 4.0 | 26.9 | 26.9 | 4.3 |
| | 63*(17.2) | 41.3 | 31.3 | 2.8 | 39.4 | 30.3 | 3.1 | 37.2 | 29.3 | 3.4 | 31.7 | 27.5 | 3.7 | 28.9 | 26.9 | 4.0 | 25.8 | 25.5 | 4.3 |
| | 67(19.4) | 44.4 | 32.6 | 2.8 | 42.4 | 31.6 | 3.1 | 40.0 | 30.5 | 3.5 | 35.6 | 29.0 | 3.7 | 32.8 | 28.1 | 4.0 | 29.6 | 26.8 | 4.3 |
| | 72 (22.2) | 48.4 | 26.1 | 2.9 | 46.2 | 24.9 | 3.1 | 43.7 | 24.0 | 3.5 | 37.4 | 22.3 | 3.8 | 34.1 | 21.6 | 4.0 | 30.5 | 20.1 | 4.4 |
| 1575 /.11 | 57 (13.8) | 43.4 | 43.4 | 2.9 | 41.9 | 41.9 | 3.1 | 39.9 | 39.7 | 3.5 | 34.4 | 34.4 | 3.8 | 31.7 | 31.7 | 4.1 | 28.9 | 28.9 | 4.4 |
| | 62 (16.6) | 43.8 | 43.5 | 2.9 | 41.9 | 41.9 | 3.1 | 39.9 | 39.7 | 3.5 | 34.4 | 34.4 | 3.8 | 31.7 | 31.7 | 4.1 | 28.9 | 28.9 | 4.4 |
| | 63*(17.2) | 44.3 | 34.7 | 2.9 | 42.3 | 33.6 | 3.1 | 40.0 | 32.5 | 3.5 | 34.0 | 30.5 | 3.8 | 31.0 | 29.9 | 4.1 | 27.6 | 27.6 | 4.4 |
| | 67(19.4) | 47.7 | 36.2 | 2.9 | 45.5 | 35.0 | 3.2 | 42.9 | 33.8 | 3.5 | 38.2 | 32.1 | 3.8 | 35.2 | 31.1 | 4.1 | 31.8 | 29.7 | 4.4 |
| | 72 (22.2) | 51.9 | 28.9 | 2.9 | 49.6 | 27.6 | 3.2 | 46.9 | 26.6 | 3.6 | 40.1 | 24.7 | 3.8 | 36.6 | 23.9 | 4.1 | 32.7 | 22.3 | 4.4 |

See Notes on page 17.

Manufacturer reserves the right to change, at any time, specifications and designs without notice and without obligations.

# Performance Data

## 48 Size

| EVAPORATOR AIR | | CONDENSER ENTERING AIR TEMPEREATURES °F (°C) | | | | | | | | | | | | | | | | | |
|---|---|---|---|---|---|---|---|---|---|---|---|---|---|---|---|---|---|---|---|
| | | 75 (23.9) | | | 85 (29.4) | | | 95 (35) | | | 105 (40.6) | | | 115 (46.1) | | | 125 (51.7) | | |
| CFM | EWB | Capacity MBtuh | | Total | Capacity MBtuh | | Total | Capacity MBtuh | | Total | Capacity MBtuh | | Total | Capacity MBtuh | | Total | Capacity MBtuh | | Total |
| /BF | °F(°C) | Total | Sens | Sys KW | Total | Sens | Sys KW | Total | Sens | Sys KW | Total | Sens | Sys KW | Total | Sens | Sys KW | Total | Sens | Sys KW |
| 1400 / .09 | 57 (13.8) | 44.3 | 44.3 | 3.2 | 42.8 | 42.8 | 3.5 | 40.8 | 40.8 | 3.9 | 35.1 | 35.1 | 4.3 | 32.4 | 32.4 | 4.6 | 29.5 | 29.5 | 5.0 |
| | 62 (16.6) | 46.0 | 42.6 | 3.2 | 44.0 | 41.5 | 3.5 | 41.9 | 39.3 | 3.9 | 36.1 | 34.9 | 4.3 | 33.3 | 32.7 | 4.6 | 30.4 | 29.8 | 5.0 |
| | 63*(17.2) | 47.0 | 34.3 | 3.2 | 44.8 | 33.2 | 3.5 | 42.3 | 32.1 | 3.9 | 36.0 | 30.2 | 4.3 | 32.8 | 29.5 | 4.6 | 29.3 | 27.9 | 5.0 |
| | 67(19.4) | 50.5 | 35.8 | 3.3 | 48.2 | 34.6 | 3.6 | 45.5 | 33.4 | 4.0 | 40.5 | 31.7 | 4.3 | 37.3 | 30.7 | 4.6 | 33.7 | 29.4 | 5.0 |
| | 72 (22.2) | 55.0 | 28.6 | 3.3 | 52.6 | 27.3 | 3.6 | 49.7 | 26.3 | 4.0 | 42.5 | 24.4 | 4.4 | 38.8 | 23.7 | 4.7 | 34.7 | 22.1 | 5.0 |
| 1600 / .10 | 57 (13.8) | 46.5 | 46.1 | 3.3 | 44.9 | 43.5 | 3.6 | 42.7 | 40.8 | 4.0 | 36.8 | 36.3 | 4.4 | 33.9 | 33.9 | 4.7 | 31.0 | 31.0 | 5.1 |
| | 62 (16.6) | 47.0 | 44.2 | 3.3 | 44.9 | 43.1 | 3.6 | 42.8 | 40.8 | 4.0 | 36.8 | 36.3 | 4.4 | 33.9 | 33.9 | 4.7 | 31.0 | 31.0 | 5.1 |
| | 63*(17.2) | 47.5 | 35.7 | 3.3 | 45.3 | 34.5 | 3.6 | 42.8 | 33.3 | 4.0 | 36.4 | 31.3 | 4.4 | 33.2 | 30.7 | 4.7 | 29.6 | 29.0 | 5.1 |
| | 67(19.4) | 51.1 | 37.2 | 3.3 | 48.8 | 35.9 | 3.6 | 46.0 | 34.7 | 4.1 | 40.9 | 33.0 | 4.4 | 37.7 | 31.9 | 4.7 | 34.0 | 30.6 | 5.1 |
| | 72 (22.2) | 55.7 | 29.7 | 3.4 | 53.1 | 28.4 | 3.7 | 50.3 | 27.3 | 4.1 | 43.0 | 25.4 | 4.4 | 39.2 | 24.6 | 4.7 | 35.1 | 22.9 | 5.1 |
| 1800 / .11 | 57 (13.8) | 48.1 | 48.1 | 3.4 | 46.4 | 46.4 | 3.7 | 44.2 | 43.6 | 4.1 | 38.1 | 38.1 | 4.4 | 35.1 | 35.1 | 4.8 | 32.1 | 32.1 | 5.1 |
| | 62 (16.6) | 48.6 | 47.7 | 3.4 | 46.4 | 46.1 | 3.7 | 44.3 | 43.6 | 4.1 | 38.1 | 38.1 | 4.4 | 35.1 | 35.1 | 4.8 | 32.1 | 32.1 | 5.1 |
| | 63*(17.2) | 49.1 | 38.1 | 3.4 | 46.9 | 36.9 | 3.7 | 44.3 | 35.6 | 4.1 | 37.7 | 33.5 | 4.4 | 34.4 | 32.8 | 4.8 | 30.7 | 30.7 | 5.1 |
| | 67(19.4) | 52.8 | 39.7 | 3.4 | 50.5 | 38.4 | 3.7 | 47.6 | 37.1 | 4.1 | 42.4 | 35.3 | 4.4 | 39.0 | 34.1 | 4.8 | 35.2 | 32.7 | 5.1 |
| | 72 (22.2) | 57.6 | 31.8 | 3.4 | 55.0 | 30.3 | 3.7 | 52.0 | 29.2 | 4.2 | 44.5 | 27.1 | 4.5 | 40.6 | 26.3 | 4.8 | 36.3 | 24.5 | 5.2 |

See Notes on page 17.

# Performance Data

## 60 Size

| EVAPORATOR AIR | | CONDENSER ENTERING AIR TEMPEREATURES °F (°C) | | | | | | | | | | | | | | | | | |
|---|---|---|---|---|---|---|---|---|---|---|---|---|---|---|---|---|---|---|---|
| | | 75 (23.9) | | | 85 (29.4) | | | 95 (35) | | | 105 (40.6) | | | 115 (46.1) | | | 125 (51.7) | | |
| CFM | EWB | Capacity MBtuh | | Total | Capacity MBtuh | | Total | Capacity MBtuh | | Total | Capacity MBtuh | | Total | Capacity MBtuh | | Total | Capacity MBtuh | | Total |
| /BF | °F(°C) | Total | Sens | Sys KW | Total | Sens | Sys KW | Total | Sens | Sys KW | Total | Sens | Sys KW | Total | Sens | Sys KW | Total | Sens | Sys KW |
| 1600 / .10 | 57 (13.8) | 56.4 | 56.4 | 4.0 | 54.4 | 54.4 | 4.4 | 51.8 | 51.8 | 4.9 | 42.7 | 42.7 | 5.3 | 39.2 | 39.2 | 5.7 | 36.6 | 36.6 | 6.2 |
| | 62 (16.6) | 58.6 | 52.1 | 4.0 | 55.9 | 50.8 | 4.4 | 53.3 | 48.1 | 4.9 | 43.9 | 40.1 | 5.3 | 40.3 | 39.5 | 5.7 | 37.6 | 35.9 | 6.2 |
| | 63*(17.2) | 59.7 | 42.0 | 4.0 | 57.0 | 40.7 | 4.4 | 53.9 | 39.3 | 4.9 | 43.8 | 34.6 | 5.3 | 39.7 | 35.3 | 5.7 | 36.2 | 33.4 | 6.2 |
| | 67(19.4) | 64.2 | 43.8 | 4.0 | 61.3 | 42.3 | 4.4 | 57.9 | 40.9 | 4.9 | 49.2 | 36.4 | 5.3 | 45.1 | 36.8 | 5.7 | 41.7 | 35.2 | 6.2 |
| | 72 (22.2) | 70.0 | 35.0 | 4.1 | 66.8 | 33.5 | 4.5 | 63.2 | 32.2 | 5.0 | 51.6 | 28.0 | 5.4 | 46.9 | 28.4 | 5.8 | 42.9 | 26.4 | 6.2 |
| 1750 / .10 | 57 (13.8) | 56.6 | 54.0 | 4.0 | 54.6 | 50.9 | 4.4 | 52.0 | 47.8 | 4.9 | 42.8 | 39.8 | 5.4 | 39.3 | 39.3 | 5.8 | 36.7 | 35.7 | 6.2 |
| | 62 (16.6) | 57.2 | 51.8 | 4.0 | 54.6 | 50.5 | 4.4 | 52.1 | 47.8 | 4.9 | 42.8 | 39.8 | 5.4 | 39.3 | 39.3 | 5.8 | 36.7 | 35.7 | 6.2 |
| | 63*(17.2) | 57.8 | 41.8 | 4.0 | 55.2 | 40.4 | 4.4 | 52.1 | 39.1 | 4.9 | 42.4 | 34.4 | 5.4 | 38.4 | 35.1 | 5.8 | 35.1 | 33.2 | 6.2 |
| | 67(19.4) | 62.2 | 43.5 | 4.1 | 59.4 | 42.1 | 4.5 | 56.0 | 40.7 | 5.0 | 47.6 | 36.2 | 5.4 | 43.7 | 36.6 | 5.8 | 40.3 | 35.0 | 6.2 |
| | 72 (22.2) | 67.8 | 34.8 | 4.1 | 64.7 | 33.3 | 4.5 | 61.2 | 32.0 | 5.0 | 50.0 | 27.9 | 5.4 | 45.4 | 28.2 | 5.8 | 41.5 | 26.2 | 6.3 |
| 2000 / .13 | 57 (13.8) | 59.5 | 58.6 | 4.1 | 57.4 | 55.3 | 4.5 | 54.7 | 51.9 | 5.0 | 45.0 | 43.2 | 5.5 | 41.3 | 41.3 | 5.9 | 38.6 | 38.6 | 6.3 |
| | 62 (16.6) | 60.1 | 56.8 | 4.1 | 57.4 | 54.9 | 4.5 | 54.8 | 51.9 | 5.0 | 45.0 | 43.2 | 5.5 | 41.3 | 41.3 | 5.9 | 38.6 | 38.6 | 6.3 |
| | 63*(17.2) | 60.8 | 45.4 | 4.1 | 58.0 | 43.9 | 4.5 | 54.8 | 42.4 | 5.0 | 44.5 | 37.3 | 5.5 | 40.4 | 38.2 | 5.9 | 36.9 | 36.1 | 6.3 |
| | 67(19.4) | 65.4 | 47.3 | 4.2 | 62.4 | 45.7 | 4.6 | 58.9 | 44.2 | 5.1 | 50.0 | 39.3 | 5.5 | 45.9 | 39.8 | 5.9 | 42.4 | 38.0 | 6.3 |
| | 72 (22.2) | 71.2 | 37.8 | 4.2 | 68.0 | 36.1 | 4.6 | 64.4 | 34.8 | 5.1 | 52.6 | 30.3 | 5.5 | 47.8 | 30.6 | 5.9 | 43.7 | 28.5 | 6.4 |

See Notes on page 17.

Manufacturer reserves the right to change, at any time, specifications and designs without notice and without obligations.

# Performance Data

*At 75°F (24°C) entering dry bulb-Tennessee Valley Authority (TVA) rating conditions; all others at 80°F (26.7°C) dry bulb.

LEGEND

BF— Bypass Factor
edb— Entering Dry-Bulb
ewb— Entering Wet-Bulb
KW — Total Unit Power Input
rh—Relative Humidity

COOLING NOTES:

1. Ratings are net; they account for the effects of the evaporator-fan motor power and heat.
2. Direct interpolation is permissible. Do not extrapolate.
3. The following formulas may be used:

$$t_{ldb} = t_{edb} - \frac{\text{Sensible Capacity (Btuh)}}{1.09 \times \text{CFM}}$$

$t_{lwb}$ = Wet-bulb temperature corresponding to enthalpy air leaving evaporator coil ($h_{lwb}$)

$$h_{lwb} = h_{ewb} - \frac{\text{Total Capacity (Btuh)}}{(4.5 \times \text{CFM})}$$

Where: $h_{ewb}$ = Enthalpy of air entering evaporator coil

4. The Sensible Capacity is based on 80° F (26.7°C) edb temperature of air entering evaporator coil. Below 80°F (26.7°C) edb, subtract (corr factor x cfm) from Sensible Capacity. Above 80°F (26.7°C) edb, add (corr factor x cfm) to Sensible Capacity.

Correction Factor = 1.09 x (1 - BF) x ($t_{edb}$ - 80)

Manufacturer reserves the right to change, at any time, specifications and designs without notice and without obligations.

## Gas Adjustment

## Natural Gas Orifice Sizes and Manifold Pressure

| Nameplate Input (Btu/hr) | | ALTITUDE OF INSTALLATION (FT. ABOVE SEA LEVEL) U.S.A.* | | | | |
|---|---|---|---|---|---|---|
| | | 0 to 2000 (0-610 m) | 2001 to 3000* (611 to 914 m) | 3001 to 4000 (915 to 1219 m) | 4001 to 5000 (1220 to 1524 m) | 5001 to 6000 (1524 to 1829 m) |
| 40000 | Orifice No. (Qty) | 44 (2) | 45 (2)† | 48(2)† | 48 (2)† | 48 (2)† |
| | Manifold Press. (in. W.C.) | 3.2 | 3.2 | 3.8 | 3.5 | 3.2 |
| 60000 | Orifice No. (Qty) | 44 (2) | 45 (2)† | 48 (2)† | 48 (2)† | 48 (2)† |
| | Manifold Press. (in. W.C.) | 3.2 | 3.2 | 3.8 | 3.5 | 3.2 |
| 90000 | Orifice No. (Qty) | 38 (3) | 41 (3)† | 41 (3)† | 42 (3)† | 42 (3)† |
| | Manifold Press. (in. W.C.) | 3.6 | 3.8 | 3.4 | 3.4 | 3.2 |
| 115000 | Orifice No. (Qty) | 33 (3) | 36 (3)† | 36 (3)† | 36 (3)† | 38 (3)† |
| | Manifold Press. (in. W.C.) | 3.8 | 3.8 | 3.6 | 3.3 | 3.6 |
| 127000 | Orifice No. (Qty) | 31 (3) | 31 (3) | 33 (3)† | 33 (3)† | 34 (3)† |
| | Manifold Press. (in. W.C.) | 3.7 | 3.2 | 3.5 | 3.2 | 3.2 |

*. In the U.S.A., the input rating for altitudes above 2000 ft (610m) must be reduced by 4% for each 1000 ft (305 m) above sea level.
In Canada, the input rating for altitudes from 2001 to 4500 ft (611 to 1372 m) above sea level must be derated by 10% by an authorized gas conversion station or dealer.
For Canadian Installations from 2000 to 4500 ft (610-1372 m), use U.S.A. column 2001 to 3000 ft (611 to 914 m).
†. Orifices available through your distributor.
NOTE: Orifice sizes and manifold pressure settings are based on natural gas with a heating value of 1025 Btu/ft$^3$ and a specific gravity of .6.

## Propane Gas Orifice Sizes and Manifold Pressure

| Nameplate Input (Btu/hr) | | ALTITUDE OF INSTALLATION (FT. ABOVE SEA LEVEL) U.S.A.*† | | | | |
|---|---|---|---|---|---|---|
| | | 0 to 2000 (0-610 m) | 2001 to 3000* (611 to 914 m) | 3001 to 4000 (915 to 1219 m) | 4001 to 5000 (1220 to 1524 m) | 5001 to 6000 (1524 to 1829 m) |
| 40000 | Orifice No. (Qty) | 55 (2) | 56 (2) | 56 (2) | 56 (2) | 56 (2) |
| | Manifold Press. (in. W.C.) | 10.0 | 11.0 | 11.0 | 11.0 | 10.7 |
| 60000 | Orifice No. (Qty) | 55 (3) | 56 (3) | 56 (3) | 56 (3) | 54 (3) |
| | Manifold Press. (in. W.C.) | 10.0 | 11.0 | 11.0 | 11.0 | 11.7 |
| 90000 | Orifice No. (Qty) | 53 (3) | 54 (3) | 54 (3) | 54 (3) | 54 (3) |
| | Manifold Press.(in. W.C.) | 10.0 | 11.0 | 11.0 | 11.0 | 11.0 |
| 115000 | Orifice No. (Qty) | 51 (3) | 52 (3) | 52 (3) | 53 (3) | 53 (3) |
| | Manifold Press. (in. W.C.) | 10.0 | 11.0 | 10.6 | 11.0 | 11.0 |
| 127000 | Orifice No. (Qty) | 49 (3) | 50 (3) | 51 (3) | 52 (3) | 52 (3) |
| | Manifold Press. (in. W.C.) | 10.0 | 11.0 | 11.0 | 11.0 | 11.0 |

*. In the U.S.A., the input rating for altitudes above 2000 ft (610m) must be reduced by 4% for each 1000 ft (305 m) above sea level.
In Canada, the input rating for altitudes from 2001 to 4500 ft (611 to 1372 m) above sea level must be derated by 10% by an authorized gas conversion station or dealer.
For Canadian Installations from 2000 to 4500 ft (610-1372 m), use U.S.A. column 2001 to 3000 ft (611 to 914 m).
†. Use Kit No. CPLPCONV013*00 (0-2000 ft [0-610 m] above sea level). Use Kit No. CPLPCONV014*00 (2001-6000 ft [611-1829 m] above sea level).

Manufacturer reserves the right to change, at any time, specifications and designs without notice and without obligations.

## High Altitude Compensation, Propane Gas

| Nameplate Input (Btu/hr) | Rated Heating Input (Btu/hr), LP Gas at Installation Altitude Above Sea Level, U.S.A.* | | | | |
|---|---|---|---|---|---|
| | 0 to 2000 ft (0-610 m) | 2001 to 3000 ft* (611 to 914 m) | 3001 to 4000 ft (915 to 1219 m) | 4001 to 5000 ft (1220 to 1524 m) | 5001 to 6000 ft (1524 to 1829 m) |
| 40000 | 38000 | 31700 | 31700 | 31700 | 31200 |
| 60000 | 57000 | 47500 | 47500 | 47500 | 46900 |
| 90000 | 79000 | 68900 | 68900 | 68600 | 68600 |
| 115000 | 103000 | 100400 | 98900 | 83000 | 83000 |
| 127000 | 116000 | 115500 | 111800 | 101300 | 100400 |

*. In the U.S.A., the input rating for altitudes above 2000 ft (610m) must be reduced by 4% for each 1000 ft (305 m) above sea level.
In Canada, the input rating for altitudes from 2001 to 4500 ft (611 to 1372 m) above sea level must be derated by 10% by an authorized gas conversion station or dealer.
For Canadian Installations from 2000 to 4500 ft (610-1372 m), use U.S.A. column 2001 to 3000 ft (611 to 914 m).

## High Altitude Compensation, Natural Gas

| Nameplate Input (Btu/hr) | Rated Heating Input (Btu/hr), Natural Gas at Installation Altitude Above Sea Level, U.S.A.** | | | | |
|---|---|---|---|---|---|
| | 0 to 2000 ft (0-610 m) | 2001 to 3000 ft* (611 to 914 m) | 3001 to 4000 ft (915 to 1219 m) | 4001 to 5000 ft (1220 to 1524 m) | 5001 to 6000 ft (1524 to 1829 m) |
| 40000 | 40000 | 36000 | 34400 | 32800 | 31200 |
| 60000 | 60000 | 54000 | 51600 | 49200 | 46800 |
| 90000 | 90000 | 81000 | 77400 | 73800 | 70200 |
| 115000 | 115000 | 103500 | 98900 | 94300 | 89700 |
| 127000 | 127000 | 114300 | 109200 | 104100 | 99100 |

*. In the U.S.A., the input rating for altitudes above 2000 ft (610m) must be reduced by 4% for each 1000 ft (305 m) above sea level.
In Canada, the input rating for altitudes from 2001 to 4500 ft (611 to 1372 m) above sea level must be derated by 10% by an authorized gas conversion station or dealer.
For Canadian Installations from 2000 to 4500 ft (610-1372 m), use U.S.A. column 2001 to 3000 ft (611 to 914 m).

Manufacturer reserves the right to change, at any time, specifications and designs without notice and without obligations.

## Dry Coil Air Delivery* - Horizontal and Downflow Discharge Sizes 24-60

| Unit Size | Heating Rise °F (°C) | Motor Speed | Tap | Allowable Functions | ESP (in. W.C.) | 0.1 | 0.2 | 0.3 | 0.4 | 0.5 | 0.6 | 0.7 | 0.8 | 0.9 | 1 |
|---|---|---|---|---|---|---|---|---|---|---|---|---|---|---|---|
| 24040 | 25 - 55 (14 - 31) | Low† | Blue | Alternate Heating | CFM | 640 | 553 | 454 | 310 | --- | --- | --- | --- | --- | --- |
| | | | | | BHP | 0.07 | 0.08 | 0.08 | 0.09 | --- | --- | --- | --- | --- | --- |
| | | | | | Gas Heat Rise (°F) | 47 | 54 | NA | NA | NA | NA | NA | NA | NA | NA |
| | | | | | Gas Heat Rise (°C) | 26 | 30 | NA | NA | NA | NA | NA | NA | NA | NA |
| | | Med-Low | Pink | Heating Alternate Cooling | CFM | 830 | 758 | 688 | 607 | 514 | 393 | 254 | --- | --- | --- |
| | | | | | BHP | 0.12 | 0.13 | 0.13 | 0.13 | 0.14 | 0.14 | 0.15 | --- | --- | --- |
| | | | | | Gas Heat Rise (°F) | 36 | 39 | 43 | 49 | NA | NA | NA | NA | NA | NA |
| | | | | | Gas Heat Rise (°C) | 20 | 22 | 24 | 27 | NA | NA | NA | NA | NA | NA |
| | | Medium** | Red | Cooling Alternate Heating | CFM | 1080 | 1025 | 969 | 910 | 852 | 787 | 718 | 638 | 541 | 457 |
| | | | | | BHP | 0.21 | 0.22 | 0.23 | 0.23 | 0.24 | 0.24 | 0.25 | 0.25 | 0.26 | 0.27 |
| | | | | | Gas Heat Rise (°F) | 28 | 29 | 31 | 33 | 35 | 38 | 41 | 47 | 55 | NA |
| | | | | | Gas Heat Rise (°C) | 15 | 16 | 17 | 18 | 19 | 21 | 23 | 26 | 31 | NA |
| | | Med-High‡ | Orange | Alternate Cooling Alternate Heating | CFM | 1101 | 1046 | 993 | 936 | 878 | 816 | 749 | 676 | 599 | 498 |
| | | | | | BHP | 0.22 | 0.23 | 0.24 | 0.24 | 0.25 | 0.26 | 0.26 | 0.27 | 0.27 | 0.28 |
| | | | | | Gas Heat Rise (°F) | 27 | 28 | 30 | 32 | 34 | 36 | 40 | 44 | 50 | NA |
| | | | | | Gas Heat Rise (°C) | 15 | 16 | 17 | 18 | 19 | 20 | 22 | 24 | 28 | NA |
| | | High | Black | High Static Cooling Only | CFM | 1222 | 1173 | 1123 | 1072 | 1021 | 967 | 912 | 853 | 787 | 712 |
| | | | | | BHP | 0.29 | 0.29 | 0.30 | 0.31 | 0.31 | 0.32 | 0.33 | 0.34 | 0.34 | 0.34 |
| 24060 | 25 - 55 (14 - 31) | Low† | Blue | | CFM | 640 | 553 | 454 | 310 | --- | --- | --- | --- | --- | --- |
| | | | | | BHP | 0.07 | 0.08 | 0.08 | 0.09 | --- | --- | --- | --- | --- | --- |
| | | | | | Gas Heat Rise (°F) | NA | NA | NA | NA | NA | NA | NA | NA | NA | NA |
| | | | | | Gas Heat Rise (°C) | NA | NA | NA | NA | NA | NA | NA | NA | NA | NA |
| | | Med-Low | Pink | Alternate Cooling Alternate Heating | CFM | 830 | 758 | 688 | 607 | 514 | 393 | 254 | --- | --- | --- |
| | | | | | BHP | 0.12 | 0.13 | 0.13 | 0.13 | 0.14 | 0.14 | 0.15 | --- | --- | --- |
| | | | | | Gas Heat Rise (°F) | 54 | NA | NA | NA | NA | NA | NA | NA | NA | NA |
| | | | | | Gas Heat Rise (°C) | 30 | NA | NA | NA | NA | NA | NA | NA | NA | NA |
| | | Medium** | Red | Cooling Alternate Heating | CFM | 1080 | 1025 | 969 | 910 | 852 | 787 | 718 | 638 | 541 | 457 |
| | | | | | BHP | 0.21 | 0.22 | 0.23 | 0.23 | 0.24 | 0.24 | 0.25 | 0.25 | 0.26 | 0.27 |
| | | | | | Gas Heat Rise (°F) | 41 | 44 | 46 | 49 | 52 | NA | NA | NA | NA | NA |
| | | | | | Gas Heat Rise (°C) | 23 | 24 | 26 | 27 | 29 | NA | NA | NA | NA | NA |
| | | Med-High‡ | Orange | Heating Alternate Cooling | CFM | 1101 | 1046 | 993 | 936 | 878 | 816 | 749 | 676 | 599 | 498 |
| | | | | | BHP | 0.22 | 0.23 | 0.24 | 0.24 | 0.25 | 0.26 | 0.26 | 0.27 | 0.27 | 0.28 |
| | | | | | Gas Heat Rise (°F) | 41 | 43 | 45 | 48 | 51 | 55 | NA | NA | NA | NA |
| | | | | | Gas Heat Rise (°C) | 23 | 24 | 25 | 26 | 28 | 30 | NA | NA | NA | NA |
| | | High | Black | High Static Cooling Only | CFM | 1222 | 1173 | 1123 | 1072 | 1021 | 967 | 912 | 853 | 787 | 712 |
| | | | | | BHP | 0.29 | 0.29 | 0.30 | 0.31 | 0.31 | 0.32 | 0.33 | 0.34 | 0.34 | 0.34 |

## Dry Coil Air Delivery* - Horizontal and Downflow Discharge Sizes 24-60 (Continued)

| Unit Size | Heating Rise °F (°C) | Motor Speed | Tap | Allowable Functions | ESP (in. W.C.) | 0.1 | 0.2 | 0.3 | 0.4 | 0.5 | 0.6 | 0.7 | 0.8 | 0.9 | 1 |
|---|---|---|---|---|---|---|---|---|---|---|---|---|---|---|---|
| 30040 | 25 - 55 (14 - 31) | Low† | Blue | Alternate Heating | CFM | 643 | 552 | 455 | 348 | 225 | --- | --- | --- | --- | --- |
| | | | | | BHP | 0.09 | 0.10 | 0.11 | 0.11 | 0.11 | --- | --- | --- | --- | --- |
| | | | | | Gas Heat Rise (°F) | 46 | 54 | NA | NA | NA | NA | NA | NA | NA | NA |
| | | | | | Gas Heat Rise (°C) | 26 | 30 | NA | NA | NA | NA | NA | NA | NA | NA |
| | | Med-Low | Pink | Heating Alternate Cooling | CFM | 817 | 744 | 673 | 597 | 516 | 431 | 325 | 190 | --- | --- |
| | | | | | BHP | 0.14 | 0.15 | 0.15 | 0.16 | 0.17 | 0.17 | 0.18 | 0.18 | --- | --- |
| | | | | | Gas Heat Rise (°F) | 36 | 40 | 44 | 50 | NA | NA | NA | NA | NA | NA |
| | | | | | Gas Heat Rise (°C) | 20 | 22 | 25 | 28 | NA | NA | NA | NA | NA | NA |
| | | Medium** | Red | Alternate Cooling Alternate Heating | CFM | 1159 | 1104 | 1045 | 990 | 937 | 878 | 821 | 759 | 693 | 618 |
| | | | | | BHP | 0.31 | 0.32 | 0.33 | 0.33 | 0.34 | 0.35 | 0.36 | 0.37 | 0.37 | 0.38 |
| | | | | | Gas Heat Rise (°F) | 26 | 27 | 28 | 30 | 32 | 34 | 36 | 39 | 43 | 48 |
| | | | | | Gas Heat Rise (°C) | 14 | 15 | 16 | 17 | 18 | 19 | 20 | 22 | 24 | 27 |
| | | Med-High‡ | Orange | Cooling Alternate Heating | CFM | 1201 | 1147 | 1095 | 1037 | 987 | 934 | 877 | 818 | 755 | 671 |
| | | | | | BHP | 0.34 | 0.35 | 0.36 | 0.37 | 0.37 | 0.38 | 0.39 | 0.40 | 0.41 | 0.40 |
| | | | | | Gas Heat Rise (°F) | 25 | 26 | 27 | 29 | 30 | 32 | 34 | 36 | 39 | 44 |
| | | | | | Gas Heat Rise (°C) | 14 | 14 | 15 | 16 | 17 | 18 | 19 | 20 | 22 | 25 |
| | | High | Black | High Static Cooling Only | CFM | 1291 | 1236 | 1181 | 1131 | 1080 | 1033 | 978 | 909 | 792 | 661 |
| | | | | | BHP | 0.41 | 0.42 | 0.43 | 0.43 | 0.44 | 0.45 | 0.46 | 0.45 | 0.43 | 0.40 |
| 30060 | 25 - 55 (14 - 31) | Low† | Blue | | CFM | 643 | 552 | 455 | 348 | 225 | --- | --- | --- | --- | --- |
| | | | | | BHP | 0.09 | 0.10 | 0.11 | 0.11 | 0.11 | --- | --- | --- | --- | --- |
| | | | | | Gas Heat Rise (°F) | NA | NA | NA | NA | NA | NA | NA | NA | NA | NA |
| | | | | | Gas Heat Rise (°C) | NA | NA | NA | NA | NA | NA | NA | NA | NA | NA |
| | | Med-Low | Pink | Alternate Cooling Alternate Heating | CFM | 817 | 744 | 673 | 597 | 516 | 431 | 325 | 190 | --- | --- |
| | | | | | BHP | 0.14 | 0.15 | 0.15 | 0.16 | 0.17 | 0.17 | 0.18 | 0.18 | --- | --- |
| | | | | | Gas Heat Rise (°F) | 55 | NA | NA | NA | NA | NA | NA | NA | NA | NA |
| | | | | | Gas Heat Rise (°C) | 30 | NA | NA | NA | NA | NA | NA | NA | NA | NA |
| | | Medium** | Red | Heating Alternate Cooling | CFM | 1159 | 1104 | 1045 | 990 | 937 | 878 | 821 | 759 | 693 | 618 |
| | | | | | BHP | 0.31 | 0.32 | 0.33 | 0.33 | 0.34 | 0.35 | 0.36 | 0.37 | 0.37 | 0.38 |
| | | | | | Gas Heat Rise (°F) | 39 | 40 | 43 | 45 | 48 | 51 | 54 | NA | NA | NA |
| | | | | | Gas Heat Rise (°C) | 21 | 22 | 24 | 25 | 26 | 28 | 30 | NA | NA | NA |
| | | Med-High‡ | Orange | Cooling Alternate Heating | CFM | 1201 | 1147 | 1095 | 1037 | 987 | 934 | 877 | 818 | 755 | 671 |
| | | | | | BHP | 0.34 | 0.35 | 0.36 | 0.37 | 0.37 | 0.38 | 0.39 | 0.40 | 0.41 | 0.40 |
| | | | | | Gas Heat Rise (°F) | 37 | 39 | 41 | 43 | 45 | 48 | 51 | 55 | NA | NA |
| | | | | | Gas Heat Rise (°C) | 21 | 22 | 23 | 24 | 25 | 27 | 28 | 30 | NA | NA |
| | | High | Black | High Static Cooling Only | CFM | 1291 | 1236 | 1181 | 1131 | 1080 | 1033 | 978 | 909 | 792 | 661 |
| | | | | | BHP | 0.41 | 0.42 | 0.43 | 0.43 | 0.44 | 0.45 | 0.46 | 0.45 | 0.43 | 0.40 |

Manufacturer reserves the right to change, at any time, specifications and designs without notice and without obligations.

## Dry Coil Air Delivery* - Horizontal and Downflow Discharge Sizes 24-60 (Continued)

| Unit Size | Heating Rise °F (°C) | Motor Speed | Tap | Allowable Functions | ESP (in. W.C.) | 0.1 | 0.2 | 0.3 | 0.4 | 0.5 | 0.6 | 0.7 | 0.8 | 0.9 | 1 |
|---|---|---|---|---|---|---|---|---|---|---|---|---|---|---|---|
| 36060 | 25 - 55 (14 - 31) | Low† | Blue | Alternate Cooling, Alternate Gas Heating | CFM | 1096 | 1044 | 994 | 945 | 892 | 837 | 780 | 717 | 664 | 612 |
| | | | | | BHP | 0.14 | 0.15 | 0.16 | 0.18 | 0.19 | 0.19 | 0.20 | 0.21 | 0.22 | 0.23 |
| | | | | | Gas Heat Rise (°F) | 41 | 43 | 45 | 47 | 50 | 53 | NA | NA | NA | NA |
| | | | | | Gas Heat Rise (°C) | 23 | 24 | 25 | 26 | 28 | 30 | NA | NA | NA | NA |
| | | Med-Low | Pink | Gas Heating, Alternate Cooling | CFM | 1151 | 1103 | 1056 | 1002 | 953 | 897 | 845 | 788 | 729 | 678 |
| | | | | | BHP | 0.16 | 0.17 | 0.18 | 0.19 | 0.20 | 0.21 | 0.22 | 0.23 | 0.24 | 0.25 |
| | | | | | Gas Heat Rise (°F) | 39 | 40 | 42 | 45 | 47 | 50 | 53 | NA | NA | NA |
| | | | | | Gas Heat Rise (°C) | 22 | 22 | 23 | 25 | 26 | 28 | 29 | NA | NA | NA |
| | | Medium** | Red | Alternate Cooling, Alternate Gas Heating | CFM | 1299 | 1252 | 1204 | 1155 | 1106 | 1059 | 1007 | 959 | 905 | 844 |
| | | | | | BHP | 0.22 | 0.23 | 0.24 | 0.25 | 0.26 | 0.27 | 0.28 | 0.29 | 0.30 | 0.31 |
| | | | | | Gas Heat Rise (°F) | 34 | 36 | 37 | 39 | 40 | 42 | 44 | 47 | 49 | 53 |
| | | | | | Gas Heat Rise (°C) | 19 | 20 | 21 | 21 | 22 | 23 | 25 | 26 | 27 | 29 |
| | | Med-High‡ | Orange | Cooling, Alternate Gas Heating | CFM | 1382 | 1335 | 1292 | 1246 | 1202 | 1152 | 1106 | 1058 | 1007 | 957 |
| | | | | | BHP | 0.26 | 0.27 | 0.28 | 0.29 | 0.30 | 0.31 | 0.32 | 0.33 | 0.34 | 0.35 |
| | | | | | Gas Heat Rise (°F) | 32 | 33 | 35 | 36 | 37 | 39 | 40 | 42 | 44 | 47 |
| | | | | | Gas Heat Rise (°C) | 18 | 19 | 19 | 20 | 21 | 22 | 22 | 23 | 25 | 26 |
| | | High | Black | High Static Cooling Only | CFM | 1530 | 1485 | 1442 | 1398 | 1354 | 1309 | 1263 | 1217 | 1169 | 1120 |
| | | | | | BHP | 0.33 | 0.35 | 0.36 | 0.37 | 0.38 | 0.39 | 0.40 | 0.41 | 0.42 | 0.43 |
| 36090 | 35 - 65 (19 - 36) | Low† | Blue | Alternate Cooling, Alternate Gas Heating | CFM | 1096 | 1044 | 994 | 945 | 892 | 837 | 780 | 717 | 664 | 612 |
| | | | | | BHP | 0.14 | 0.15 | 0.16 | 0.18 | 0.19 | 0.19 | 0.20 | 0.21 | 0.22 | 0.23 |
| | | | | | Gas Heat Rise (°F) | 61 | 64 | NA | NA | NA | NA | NA | NA | NA | NA |
| | | | | | Gas Heat Rise (°C) | 34 | 36 | NA | NA | NA | NA | NA | NA | NA | NA |
| | | Med-Low | Pink | Alternate Cooling, Alternate Gas Heating | CFM | 1151 | 1103 | 1056 | 1002 | 953 | 897 | 845 | 788 | 729 | 678 |
| | | | | | BHP | 0.16 | 0.17 | 0.18 | 0.19 | 0.20 | 0.21 | 0.22 | 0.23 | 0.24 | 0.25 |
| | | | | | Gas Heat Rise (°F) | 58 | 61 | 63 | NA | NA | NA | NA | NA | NA | NA |
| | | | | | Gas Heat Rise (°C) | 32 | 34 | 35 | NA | NA | NA | NA | NA | NA | NA |
| | | Medium** | Red | Gas Heating, Alternate Cooling | CFM | 1299 | 1252 | 1204 | 1155 | 1106 | 1059 | 1007 | 959 | 905 | 844 |
| | | | | | BHP | 0.22 | 0.23 | 0.24 | 0.25 | 0.26 | 0.27 | 0.28 | 0.29 | 0.30 | 0.31 |
| | | | | | Gas Heat Rise (°F) | 52 | 53 | 56 | 58 | 61 | 63 | NA | NA | NA | NA |
| | | | | | Gas Heat Rise (°C) | 29 | 30 | 31 | 32 | 34 | 35 | NA | NA | NA | NA |
| | | Med-High‡ | Orange | Cooling, Alternate Gas Heating | CFM | 1382 | 1335 | 1292 | 1246 | 1202 | 1152 | 1106 | 1058 | 1007 | 957 |
| | | | | | BHP | 0.26 | 0.27 | 0.28 | 0.29 | 0.30 | 0.31 | 0.32 | 0.33 | 0.34 | 0.35 |
| | | | | | Gas Heat Rise (°F) | 48 | 50 | 52 | 54 | 56 | 58 | 61 | 63 | NA | NA |
| | | | | | Gas Heat Rise (°C) | 27 | 28 | 29 | 30 | 31 | 32 | 34 | 35 | NA | NA |
| | | High | Black | High Static Cooling Only | CFM | 1530 | 1485 | 1442 | 1398 | 1354 | 1309 | 1263 | 1217 | 1169 | 1120 |
| | | | | | BHP | 0.33 | 0.35 | 0.36 | 0.37 | 0.38 | 0.39 | 0.40 | 0.41 | 0.42 | 0.43 |

## Dry Coil Air Delivery* - Horizontal and Downflow Discharge Sizes 24-60 (Continued)

| Unit Size | Heating Rise °F (°C) | Motor Speed | Tap | Allowable Functions | ESP (in. W.C.) | 0.1 | 0.2 | 0.3 | 0.4 | 0.5 | 0.6 | 0.7 | 0.8 | 0.9 | 1 |
|---|---|---|---|---|---|---|---|---|---|---|---|---|---|---|---|
| 42060 | 25 - 55 (14 - 31) | Low† | Blue | Alternate Heating | CFM | 956 | 899 | 843 | 786 | 729 | 676 | 621 | 558 | 504 | 435 |
| | | | | | BHP | 0.13 | 0.13 | 0.14 | 0.15 | 0.16 | 0.16 | 0.17 | 0.18 | 0.18 | 0.19 |
| | | | | | Gas Heat Rise (°F) | 47 | 50 | 53 | NA | NA | NA | NA | NA | NA | NA |
| | | | | | Gas Heat Rise (°C) | 26 | 28 | 29 | NA | NA | NA | NA | NA | NA | NA |
| | | Med-Low | Pink | Heating Alternate Cooling | CFM | 1201 | 1153 | 1107 | 1060 | 1012 | 965 | 917 | 871 | 828 | 782 |
| | | | | | BHP | 0.21 | 0.22 | 0.22 | 0.23 | 0.24 | 0.25 | 0.26 | 0.27 | 0.28 | 0.29 |
| | | | | | Gas Heat Rise (°F) | 37 | 39 | 40 | 42 | 44 | 46 | 49 | 51 | 54 | NA |
| | | | | | Gas Heat Rise (°C) | 21 | 22 | 22 | 23 | 25 | 26 | 27 | 28 | 30 | NA |
| | | Medium** | Red | Alternate Cooling Alternate Heating | CFM | 1443 | 1402 | 1361 | 1322 | 1284 | 1243 | 1204 | 1164 | 1124 | 1084 |
| | | | | | BHP | 0.32 | 0.33 | 0.34 | 0.35 | 0.36 | 0.37 | 0.38 | 0.39 | 0.40 | 0.42 |
| | | | | | Gas Heat Rise (°F) | 31 | 32 | 33 | 34 | 35 | 36 | 37 | 38 | 40 | 41 |
| | | | | | Gas Heat Rise (°C) | 17 | 18 | 18 | 19 | 19 | 20 | 21 | 21 | 22 | 23 |
| | | Med-High‡ | Orange | Cooling Alternate Heating | CFM | 1529 | 1491 | 1451 | 1411 | 1376 | 1338 | 1300 | 1261 | 1223 | 1185 |
| | | | | | BHP | 0.37 | 0.39 | 0.40 | 0.41 | 0.42 | 0.43 | 0.44 | 0.45 | 0.46 | 0.47 |
| | | | | | Gas Heat Rise (°F) | 29 | 30 | 31 | 32 | 32 | 33 | 34 | 35 | 36 | 38 |
| | | | | | Gas Heat Rise (°C) | 16 | 17 | 17 | 18 | 18 | 19 | 19 | 20 | 20 | 21 |
| | | High | Black | High Static Cooling Only | CFM | 1604 | 1565 | 1529 | 1490 | 1455 | 1421 | 1385 | 1348 | 1310 | 1274 |
| | | | | | BHP | 0.42 | 0.44 | 0.45 | 0.46 | 0.47 | 0.48 | 0.49 | 0.50 | 0.51 | 0.52 |
| 42090 | 35 - 65 (19 - 36) | Low† | Blue | | CFM | 956 | 899 | 843 | 786 | 729 | 676 | 621 | 558 | 504 | 435 |
| | | | | | BHP | 0.13 | 0.13 | 0.14 | 0.15 | 0.16 | 0.16 | 0.17 | 0.18 | 0.18 | 0.19 |
| | | | | | Gas Heat Rise (°F) | NA | NA | NA | NA | NA | NA | NA | NA | NA | NA |
| | | | | | Gas Heat Rise (°C) | NA | NA | NA | NA | NA | NA | NA | NA | NA | NA |
| | | Med-Low | Pink | Alternate Cooling Alternate Heating | CFM | 1201 | 1153 | 1107 | 1060 | 1012 | 965 | 917 | 871 | 828 | 782 |
| | | | | | BHP | 0.21 | 0.22 | 0.22 | 0.23 | 0.24 | 0.25 | 0.26 | 0.27 | 0.28 | 0.29 |
| | | | | | Gas Heat Rise (°F) | 56 | 58 | 60 | 63 | NA | NA | NA | NA | NA | NA |
| | | | | | Gas Heat Rise (°C) | 31 | 32 | 34 | 35 | NA | NA | NA | NA | NA | NA |
| | | Medium** | Red | Heating Alternate Cooling | CFM | 1443 | 1402 | 1361 | 1322 | 1284 | 1243 | 1204 | 1164 | 1124 | 1084 |
| | | | | | BHP | 0.32 | 0.33 | 0.34 | 0.35 | 0.36 | 0.37 | 0.38 | 0.39 | 0.40 | 0.42 |
| | | | | | Gas Heat Rise (°F) | 46 | 48 | 49 | 51 | 52 | 54 | 56 | 58 | 60 | 62 |
| | | | | | Gas Heat Rise (°C) | 26 | 27 | 27 | 28 | 29 | 30 | 31 | 32 | 33 | 34 |
| | | Med-High‡ | Orange | Cooling Alternate Heating | CFM | 1529 | 1491 | 1451 | 1411 | 1376 | 1338 | 1300 | 1261 | 1223 | 1185 |
| | | | | | BHP | 0.37 | 0.39 | 0.40 | 0.41 | 0.42 | 0.43 | 0.44 | 0.45 | 0.46 | 0.47 |
| | | | | | Gas Heat Rise (°F) | 44 | 45 | 46 | 47 | 49 | 50 | 52 | 53 | 55 | 57 |
| | | | | | Gas Heat Rise (°C) | 24 | 25 | 26 | 26 | 27 | 28 | 29 | 29 | 30 | 31 |
| | | High | Black | High Static Cooling Only | CFM | 1604 | 1565 | 1529 | 1490 | 1455 | 1421 | 1385 | 1348 | 1310 | 1274 |
| | | | | | BHP | 0.42 | 0.44 | 0.45 | 0.46 | 0.47 | 0.48 | 0.49 | 0.50 | 0.51 | 0.52 |



Manufacturer reserves the right to change, at any time, specifications and designs without notice and without obligations.

## Dry Coil Air Delivery* - Horizontal and Downflow Discharge Sizes 24-60 (Continued)

| Unit Size | Heating Rise °F (°C) | Motor Speed | Tap | Allowable Functions | ESP (in. W.C.) | 0.1 | 0.2 | 0.3 | 0.4 | 0.5 | 0.6 | 0.7 | 0.8 | 0.9 | 1 |
|---|---|---|---|---|---|---|---|---|---|---|---|---|---|---|---|
| 48090 | 35 - 65 (19 - 36) | Low† | Blue | | CFM | 641 | 551 | 462 | 385 | 289 | 216 | 163 | 115 | --- | --- |
| | | | | | BHP | 0.05 | 0.06 | 0.06 | 0.07 | 0.07 | 0.08 | 0.08 | 0.09 | --- | --- |
| | | | | | Gas Heat Rise (°F) | NA | NA | NA | NA | NA | NA | NA | NA | NA | NA |
| | | | | | Gas Heat Rise (°C) | NA | NA | NA | NA | NA | NA | NA | NA | NA | NA |
| | | Med-Low‡ | Pink | Heating Alternate Cooling | CFM | 1437 | 1395 | 1351 | 1307 | 1265 | 1221 | 1176 | 1132 | 1084 | 1039 |
| | | | | | BHP | 0.29 | 0.30 | 0.31 | 0.32 | 0.33 | 0.34 | 0.35 | 0.36 | 0.37 | 0.38 |
| | | | | | Gas Heat Rise (°F) | 47 | 48 | 50 | 51 | 53 | 55 | 57 | 59 | 62 | 64 |
| | | | | | Gas Heat Rise (°C) | 26 | 27 | 28 | 28 | 29 | 30 | 32 | 33 | 34 | 36 |
| | | Medium** | Red | Cooling | CFM | 1771 | 1735 | 1699 | 1664 | 1627 | 1592 | 1557 | 1522 | 1486 | 1450 |
| | | | | | BHP | 0.51 | 0.52 | 0.53 | 0.55 | 0.56 | 0.57 | 0.58 | 0.59 | 0.61 | 0.62 |
| | | | | | Gas Heat Rise (°F) | NA | NA | NA | NA | NA | NA | NA | NA | NA | NA |
| | | | | | Gas Heat Rise (°C) | NA | NA | NA | NA | NA | NA | NA | NA | NA | NA |
| | | Med-High | Orange | Alternate Cooling | CFM | 1928 | 1897 | 1862 | 1830 | 1796 | 1764 | 1732 | 1698 | 1620 | 1512 |
| | | | | | BHP | 0.64 | 0.65 | 0.67 | 0.68 | 0.69 | 0.71 | 0.72 | 0.73 | 0.71 | 0.66 |
| | | | | | Gas Heat Rise (°F) | NA | NA | NA | NA | NA | NA | NA | NA | NA | NA |
| | | | | | Gas Heat Rise (°C) | NA | NA | NA | NA | NA | NA | NA | NA | NA | NA |
| | | High | Black | High Static Cooling Only | CFM | 2212 | 2167 | 2124 | 2061 | 1976 | 1892 | 1794 | 1699 | 1567 | 1438 |
| | | | | | BHP | 0.97 | 0.99 | 1.00 | 0.97 | 0.95 | 0.91 | 0.86 | 0.82 | 0.77 | 0.71 |
| 48115 | 30 - 60 (17 - 33) | Low† | Blue | | CFM | 641 | 551 | 462 | 385 | 289 | 216 | 163 | 115 | --- | --- |
| | | | | | BHP | 0.05 | 0.06 | 0.06 | 0.07 | 0.07 | 0.08 | 0.08 | 0.09 | --- | --- |
| | | | | | Gas Heat Rise (°F) | NA | NA | NA | NA | NA | NA | NA | NA | NA | NA |
| | | | | | Gas Heat Rise (°C) | NA | NA | NA | NA | NA | NA | NA | NA | NA | NA |
| | | Med-Low | Pink | Alternate Cooling Alternate Heating | CFM | 1437 | 1395 | 1351 | 1307 | 1265 | 1221 | 1176 | 1132 | 1084 | 1039 |
| | | | | | BHP | 0.29 | 0.30 | 0.31 | 0.32 | 0.33 | 0.34 | 0.35 | 0.36 | 0.37 | 0.38 |
| | | | | | Gas Heat Rise (°F) | 60 | NA | NA | NA | NA | NA | NA | NA | NA | NA |
| | | | | | Gas Heat Rise (°C) | 33 | NA | NA | NA | NA | NA | NA | NA | NA | NA |
| | | Medium** | Red | Cooling Alternate Heating | CFM | 1771 | 1735 | 1699 | 1664 | 1627 | 1592 | 1557 | 1522 | 1486 | 1450 |
| | | | | | BHP | 0.51 | 0.52 | 0.53 | 0.55 | 0.56 | 0.57 | 0.58 | 0.59 | 0.61 | 0.62 |
| | | | | | Gas Heat Rise (°F) | 48 | 49 | 50 | 51 | 53 | 54 | 55 | 56 | 58 | 59 |
| | | | | | Gas Heat Rise (°C) | 27 | 27 | 28 | 29 | 29 | 30 | 31 | 31 | 32 | 33 |
| | | Med-High‡ | Orange | Heating Alternate Cooling | CFM | 1928 | 1897 | 1862 | 1830 | 1796 | 1764 | 1732 | 1698 | 1620 | 1512 |
| | | | | | BHP | 0.64 | 0.65 | 0.67 | 0.68 | 0.69 | 0.71 | 0.72 | 0.73 | 0.71 | 0.66 |
| | | | | | Gas Heat Rise (°F) | 44 | 45 | 46 | 47 | 48 | 49 | 49 | 50 | 53 | 57 |
| | | | | | Gas Heat Rise (°C) | 25 | 25 | 26 | 26 | 26 | 27 | 27 | 28 | 29 | 31 |
| | | High | Black | High Static Cooling Only | CFM | 2212 | 2167 | 2124 | 2061 | 1976 | 1892 | 1794 | 1699 | 1567 | 1438 |
| | | | | | BHP | 0.97 | 0.99 | 1.00 | 0.97 | 0.95 | 0.91 | 0.86 | 0.82 | 0.77 | 0.71 |

Manufacturer reserves the right to change, at any time, specifications and designs without notice and without obligations.

## Dry Coil Air Delivery* - Horizontal and Downflow Discharge Sizes 24-60 (Continued)

| Unit Size | Heating Rise °F (°C) | Motor Speed | Tap | Allowable Functions | ESP (in. W.C.) | 0.1 | 0.2 | 0.3 | 0.4 | 0.5 | 0.6 | 0.7 | 0.8 | 0.9 | 1 |
|---|---|---|---|---|---|---|---|---|---|---|---|---|---|---|---|
| 48130 | 35 - 65 (19 - 36) | Low† | Blue | | CFM | 641 | 551 | 462 | 385 | 289 | 216 | 163 | 115 | --- | --- |
| | | | | | BHP | 0.05 | 0.06 | 0.06 | 0.07 | 0.07 | 0.08 | 0.08 | 0.09 | --- | --- |
| | | | | | Gas Heat Rise (°F) | NA | NA | NA | NA | NA | NA | NA | NA | NA | NA |
| | | | | | Gas Heat Rise (°C) | NA | NA | NA | NA | NA | NA | NA | NA | NA | NA |
| | | Med-Low | Pink | Alternate Cooling | CFM | 1437 | 1395 | 1351 | 1307 | 1265 | 1221 | 1176 | 1132 | 1084 | 1039 |
| | | | | | BHP | 0.29 | 0.30 | 0.31 | 0.32 | 0.33 | 0.34 | 0.35 | 0.36 | 0.37 | 0.38 |
| | | | | | Gas Heat Rise (°F) | NA | NA | NA | NA | NA | NA | NA | NA | NA | NA |
| | | | | | Gas Heat Rise (°C) | NA | NA | NA | NA | NA | NA | NA | NA | NA | NA |
| | | Medium** | Red | Cooling Alternate Heating | CFM | 1771 | 1735 | 1699 | 1664 | 1627 | 1592 | 1557 | 1522 | 1486 | 1450 |
| | | | | | BHP | 0.51 | 0.52 | 0.53 | 0.55 | 0.56 | 0.57 | 0.58 | 0.59 | 0.61 | 0.62 |
| | | | | | Gas Heat Rise (°F) | 53 | 54 | 56 | 57 | 58 | 59 | 61 | 62 | 64 | 65 |
| | | | | | Gas Heat Rise (°C) | 30 | 30 | 31 | 32 | 32 | 33 | 34 | 34 | 35 | 36 |
| | | Med-High‡ | Orange | Heating Alternate Cooling | CFM | 1928 | 1897 | 1862 | 1830 | 1796 | 1764 | 1732 | 1698 | 1620 | 1512 |
| | | | | | BHP | 0.64 | 0.65 | 0.67 | 0.68 | 0.69 | 0.71 | 0.72 | 0.73 | 0.71 | 0.66 |
| | | | | | Gas Heat Rise (°F) | 49 | 50 | 51 | 52 | 53 | 54 | 55 | 56 | 58 | 62 |
| | | | | | Gas Heat Rise (°C) | 27 | 28 | 28 | 29 | 29 | 30 | 30 | 31 | 32 | 35 |
| | | High | Black | High Static Cooling Only | CFM | 2212 | 2167 | 2124 | 2061 | 1976 | 1892 | 1794 | 1699 | 1567 | 1438 |
| | | | | | BHP | 0.97 | 0.99 | 1.00 | 0.97 | 0.95 | 0.91 | 0.86 | 0.82 | 0.77 | 0.71 |
| 60090 | 35 - 65 (19 - 36) | Low† | Blue | | CFM | 641 | 551 | 462 | 385 | 289 | 216 | 163 | 115 | --- | --- |
| | | | | | BHP | 0.05 | 0.06 | 0.06 | 0.07 | 0.07 | 0.08 | 0.08 | 0.09 | --- | --- |
| | | | | | Gas Heat Rise (°F) | NA | NA | NA | NA | NA | NA | NA | NA | NA | NA |
| | | | | | Gas Heat Rise (°C) | NA | NA | NA | NA | NA | NA | NA | NA | NA | NA |
| | | Med-Low‡ | Pink | Heating Alternate Cooling | CFM | 1437 | 1395 | 1351 | 1307 | 1265 | 1221 | 1176 | 1132 | 1084 | 1039 |
| | | | | | BHP | 0.29 | 0.30 | 0.31 | 0.32 | 0.33 | 0.34 | 0.35 | 0.36 | 0.37 | 0.38 |
| | | | | | Gas Heat Rise (°F) | 47 | 48 | 50 | 51 | 53 | 55 | 57 | 59 | 62 | 64 |
| | | | | | Gas Heat Rise (°C) | 26 | 27 | 28 | 28 | 29 | 30 | 32 | 33 | 34 | 36 |
| | | Medium** | Red | Cooling | CFM | 1914 | 1881 | 1848 | 1814 | 1780 | 1748 | 1716 | 1681 | 1619 | 1512 |
| | | | | | BHP | 0.62 | 0.64 | 0.65 | 0.67 | 0.68 | 0.69 | 0.71 | 0.72 | 0.71 | 0.66 |
| | | | | | Gas Heat Rise (°F) | NA | NA | NA | NA | NA | NA | NA | NA | NA | NA |
| | | | | | Gas Heat Rise (°C) | NA | NA | NA | NA | NA | NA | NA | NA | NA | NA |
| | | Med-High | Orange | Alternate Cooling | CFM | 1928 | 1897 | 1862 | 1830 | 1796 | 1764 | 1732 | 1698 | 1620 | 1512 |
| | | | | | BHP | 0.64 | 0.65 | 0.67 | 0.68 | 0.69 | 0.71 | 0.72 | 0.73 | 0.71 | 0.66 |
| | | | | | Gas Heat Rise (°F) | NA | NA | NA | NA | NA | NA | NA | NA | NA | NA |
| | | | | | Gas Heat Rise (°C) | NA | NA | NA | NA | NA | NA | NA | NA | NA | NA |
| | | High | Black | High Static Cooling Only | CFM | 2212 | 2167 | 2124 | 2061 | 1976 | 1892 | 1794 | 1699 | 1567 | 1438 |
| | | | | | BHP | 0.97 | 0.99 | 1.00 | 0.97 | 0.95 | 0.91 | 0.86 | 0.82 | 0.77 | 0.71 |

Manufacturer reserves the right to change, at any time, specifications and designs without notice and without obligations.

## Dry Coil Air Delivery* - Horizontal and Downflow Discharge Sizes 24-60 (Continued)

| Unit Size | Heating Rise °F (°C) | Motor Speed | Tap | Allowable Functions | | ESP (in. W.C.) | | | | | | | | | |
|---|---|---|---|---|---|---|---|---|---|---|---|---|---|---|---|
| | | | | | | 0.1 | 0.2 | 0.3 | 0.4 | 0.5 | 0.6 | 0.7 | 0.8 | 0.9 | 1 |
| 60115 | 30 - 60 (17 - 33) | Low† | Blue | | CFM | 641 | 551 | 462 | 385 | 289 | 216 | 163 | 115 | --- | --- |
| | | | | | BHP | 0.05 | 0.06 | 0.06 | 0.07 | 0.07 | 0.08 | 0.08 | 0.09 | --- | --- |
| | | | | | Gas Heat Rise (°F) | NA | NA | NA | NA | NA | NA | NA | NA | NA | NA |
| | | | | | Gas Heat Rise (°C) | NA | NA | NA | NA | NA | NA | NA | NA | NA | NA |
| | | Med-Low | Pink | Alternate Cooling Alternate Heating | CFM | 1437 | 1395 | 1351 | 1307 | 1265 | 1221 | 1176 | 1132 | 1084 | 1039 |
| | | | | | BHP | 0.29 | 0.30 | 0.31 | 0.32 | 0.33 | 0.34 | 0.35 | 0.36 | 0.37 | 0.38 |
| | | | | | Gas Heat Rise (°F) | 60 | NA | NA | NA | NA | NA | NA | NA | NA | NA |
| | | | | | Gas Heat Rise (°C) | 33 | NA | NA | NA | NA | NA | NA | NA | NA | NA |
| | | Medium** | Red | Cooling Alternate Heating | CFM | 1914 | 1881 | 1848 | 1814 | 1780 | 1748 | 1716 | 1681 | 1619 | 1512 |
| | | | | | BHP | 0.62 | 0.64 | 0.65 | 0.67 | 0.68 | 0.69 | 0.71 | 0.72 | 0.71 | 0.66 |
| | | | | | Gas Heat Rise (°F) | 45 | 45 | 46 | 47 | 48 | 49 | 50 | 51 | 53 | 57 |
| | | | | | Gas Heat Rise (°C) | 25 | 25 | 26 | 26 | 27 | 27 | 28 | 28 | 29 | 31 |
| | | Med-High‡ | Orange | Heating Alternate Cooling | CFM | 1928 | 1897 | 1862 | 1830 | 1796 | 1764 | 1732 | 1698 | 1620 | 1512 |
| | | | | | BHP | 0.64 | 0.65 | 0.67 | 0.68 | 0.69 | 0.71 | 0.72 | 0.73 | 0.71 | 0.66 |
| | | | | | Gas Heat Rise (°F) | 44 | 45 | 46 | 47 | 48 | 49 | 49 | 50 | 53 | 57 |
| | | | | | Gas Heat Rise (°C) | 25 | 25 | 26 | 26 | 26 | 27 | 27 | 28 | 29 | 31 |
| | | High | Black | High Static Cooling Only | CFM | 2212 | 2167 | 2124 | 2061 | 1976 | 1892 | 1794 | 1699 | 1567 | 1438 |
| | | | | | BHP | 0.97 | 0.99 | 1.00 | 0.97 | 0.95 | 0.91 | 0.86 | 0.82 | 0.77 | 0.71 |
| 60130 | 35 - 65 (19 - 36) | Low† | Blue | | CFM | 641 | 551 | 462 | 385 | 289 | 216 | 163 | 115 | --- | --- |
| | | | | | BHP | 0.05 | 0.06 | 0.06 | 0.07 | 0.07 | 0.08 | 0.08 | 0.09 | --- | --- |
| | | | | | Gas Heat Rise (°F) | NA | NA | NA | NA | NA | NA | NA | NA | NA | NA |
| | | | | | Gas Heat Rise (°C) | NA | NA | NA | NA | NA | NA | NA | NA | NA | NA |
| | | Med-Low | Pink | Alternate Cooling | CFM | 1437 | 1395 | 1351 | 1307 | 1265 | 1221 | 1176 | 1132 | 1084 | 1039 |
| | | | | | BHP | 0.29 | 0.30 | 0.31 | 0.32 | 0.33 | 0.34 | 0.35 | 0.36 | 0.37 | 0.38 |
| | | | | | Gas Heat Rise (°F) | NA | NA | NA | NA | NA | NA | NA | NA | NA | NA |
| | | | | | Gas Heat Rise (°C) | NA | NA | NA | NA | NA | NA | NA | NA | NA | NA |
| | | Medium** | Red | Cooling Alternate Heating | CFM | 1914 | 1881 | 1848 | 1814 | 1780 | 1748 | 1716 | 1681 | 1619 | 1512 |
| | | | | | BHP | 0.62 | 0.64 | 0.65 | 0.67 | 0.68 | 0.69 | 0.71 | 0.72 | 0.71 | 0.66 |
| | | | | | Gas Heat Rise (°F) | 49 | 50 | 51 | 52 | 53 | 54 | 55 | 56 | 58 | 62 |
| | | | | | Gas Heat Rise (°C) | 27 | 28 | 28 | 29 | 29 | 30 | 31 | 31 | 32 | 35 |
| | | Med-High‡ | Orange | Heating Alternate Cooling | CFM | 1928 | 1897 | 1862 | 1830 | 1796 | 1764 | 1732 | 1698 | 1620 | 1512 |
| | | | | | BHP | 0.64 | 0.65 | 0.67 | 0.68 | 0.69 | 0.71 | 0.72 | 0.73 | 0.71 | 0.66 |
| | | | | | Gas Heat Rise (°F) | 49 | 50 | 51 | 52 | 53 | 54 | 55 | 56 | 58 | 62 |
| | | | | | Gas Heat Rise (°C) | 27 | 28 | 28 | 29 | 29 | 30 | 30 | 31 | 32 | 35 |
| | | High | Black | High Static Cooling Only | CFM | 2212 | 2167 | 2124 | 2061 | 1976 | 1892 | 1794 | 1699 | 1567 | 1438 |
| | | | | | BHP | 0.97 | 0.99 | 1.00 | 0.97 | 0.95 | 0.91 | 0.86 | 0.82 | 0.77 | 0.71 |

Shaded areas indicate speed/static combinations that are not permitted for dehumidification speed.

* Air delivery values are without air filter and are for dry coil (See Wet Coil Pressure Drop Table).
† Factory-shipped continuous fan speed
‡ Factory-shipped heating speed
** Factory-shipped cooling speed
"High Static Cooling" = Only to be used for cooling function (not allowed for heating function)
NOTE: Deduct field-supplied air filter pressure drop and wet coil pressure drop to obtain static pressure available for ducting.

Manufacturer reserves the right to change, at any time, specifications and designs without notice and without obligations.

## Wet Coil Pressure Drop (IN.W.C)

| Unit Size | Standard CFM (SCFM) | | | | | | | | | | | | | | | | |
|---|---|---|---|---|---|---|---|---|---|---|---|---|---|---|---|---|---|
| | 600 | 700 | 800 | 900 | 1000 | 1100 | 1200 | 1300 | 1400 | 1500 | 1600 | 1700 | 1800 | 1900 | 2000 | 2100 | 2200 |
| 24 | 0.03 | 0.04 | 0.04 | 0.05 | 0.06 | | | | | | | | | | | | |
| 30 | | | | 0.05 | 0.06 | 0.07 | 0.08 | 0.11 | | | | | | | | | |
| 36 | | | | 0.02 | 0.03 | 0.03 | 0.04 | 0.05 | 0.05 | | | | | | | | |
| 42 | | | | | 0.05 | 0.05 | 0.04 | 0.05 | 0.05 | 0.06 | 0.07 | 0.07 | 0.08 | 0.09 | | | |
| 48, 60 | | | | | | | | | 0.05 | 0.06 | 0.07 | 0.07 | 0.08 | 0.09 | 0.10 | 0.12 | 0.13 |

## Economizer with 1-in. Filter Pressure Drop (IN. W.C.)

| Filter Size in. (mm) | Cooling Tons | Standard CFM (SCFM) | | | | | | | | | | | | | | | | |
|---|---|---|---|---|---|---|---|---|---|---|---|---|---|---|---|---|---|---|
| | | 600 | 700 | 800 | 900 | 1000 | 1100 | 1200 | 1300 | 1400 | 1500 | 1600 | 1700 | 1800 | 1900 | 2000 | 2100 | 2200 |
| 600-1400 CFM<br>12x20x1+12x20x1<br>(305x508x25+305x508x25) | 2.0,<br>2.5 | - | - | 0.09 | 0.14 | 0.16 | 0.18 | 0.25 | 0.28 | 0.30 | - | - | - | - | - | - | - | - |
| 1200-1800 CFM<br>16x24x1+14x24x1<br>(406x610x25+356x610x25) | 3.5 | - | - | - | - | - | - | 0.10 | 0.11 | 0.12 | 0.13 | 0.14 | 0.16 | 0.16 | - | - | - | - |
| 1500-2200 CFM<br>16x24x1+18x24x1<br>(406x610x25+457x610x25) | 3.0,<br>4.0,<br>5.0 | - | - | - | - | - | - | - | - | - | 0.15 | 0.17 | 0.18 | 0.20 | 0.21 | 0.22 | 0.23 | 0.23 |

## Filter Pressure Drop Table (IN. W.C.)

| Filter Size in. (mm) | Cooling Tons | Standard CFM (SCFM) | | | | | | | | | | | | | | | | |
|---|---|---|---|---|---|---|---|---|---|---|---|---|---|---|---|---|---|---|
| | | 600 | 700 | 800 | 900 | 1000 | 1100 | 1200 | 1300 | 1400 | 1500 | 1600 | 1700 | 1800 | 1900 | 2000 | 2100 | 2200 |
| 600-1400 CFM<br>12x20x1+12x20x1<br>(305x508x25+305x508x25) | 2.0,<br>2.5 | 0.03 | 0.05 | 0.06 | 0.08 | 0.10 | 0.11 | 0.13 | 0.14 | 0.16 | - | - | - | - | - | - | - | - |
| 1200-1800 CFM<br>16x24x1+14x24x1<br>(406x610x25+356x610x25) | 3.5 | - | - | - | - | - | - | 0.07 | 0.08 | 0.09 | 0.09 | 0.10 | 0.11 | 0.12 | - | - | - | - |
| 1500-2200 CFM<br>16x24x1+18x24x1<br>(406x610x25+457x610x25) | 3.0,<br>4.0,<br>5.0 | - | - | - | - | - | - | - | - | - | 0.04 | 0.06 | 0.08 | 0.10 | 0.11 | 0.13 | 0.14 | 0.15 |

Manufacturer reserves the right to change, at any time, specifications and designs without notice and without obligations.

## TYPICAL PIPING AND WIRING

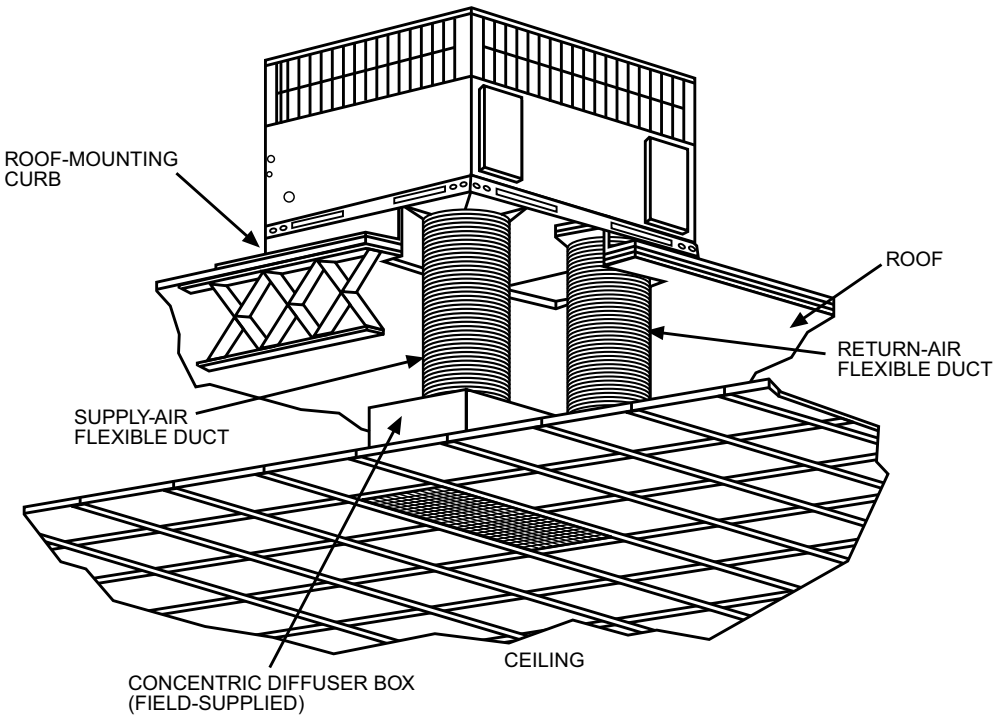


A09230

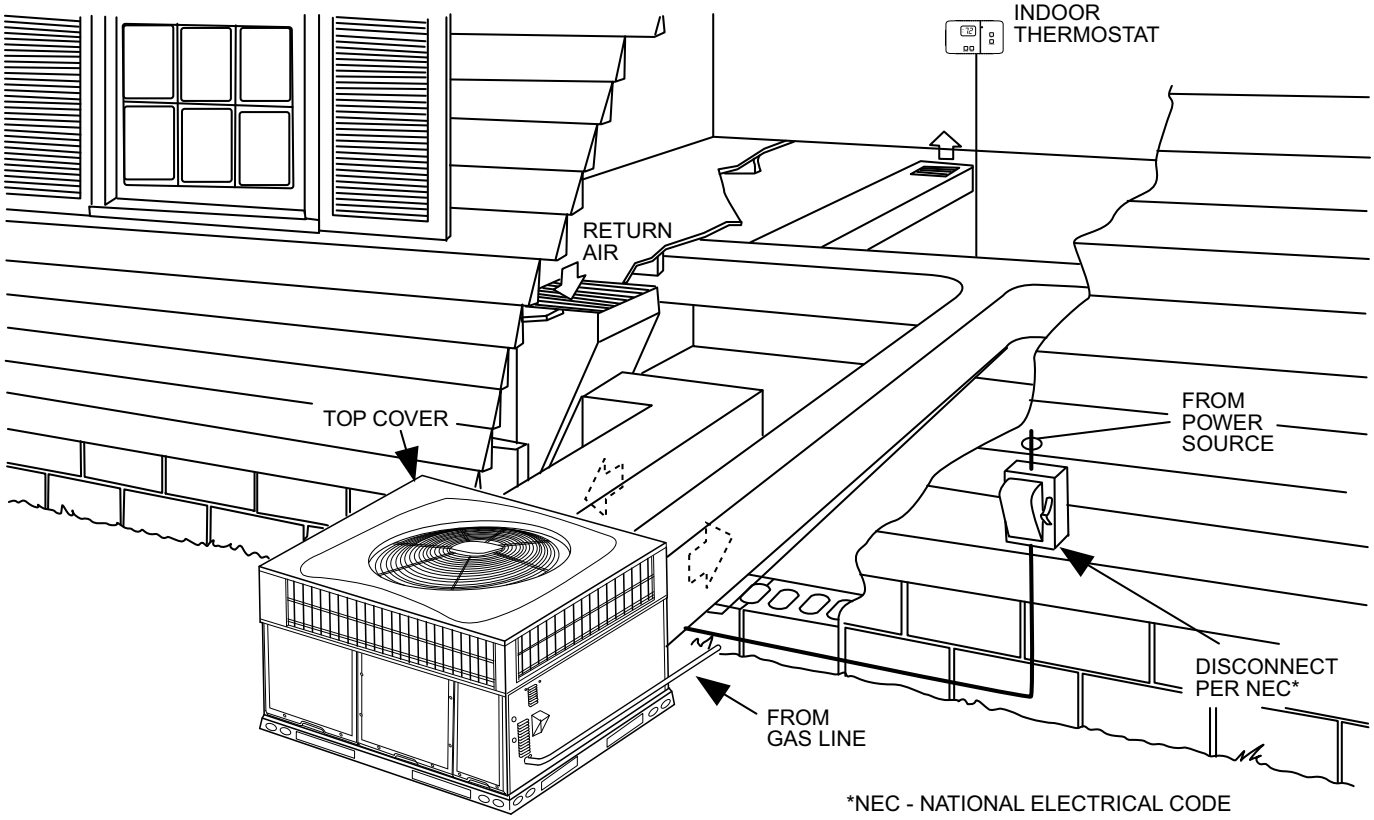


A09231

## Application Data

**Condensate trap** — A 2-in. (50.8 mm) condensate trap must be field supplied.

**Ductwork** — Secure downflow discharge ductwork to roof curb. For horizontal discharge applications, attach ductwork to unit with flanges.

**To convert a unit to downflow discharge** — Units are equipped with factory-installed inserts in the down-flow openings. Removal of the inserts is similar to removing an electrical knock-out. Use the duct cover to seal the horizontal discharge openings in the unit. Units installed in horizontal discharge orientation do not require duct covers.

**Airflow** — Units are draw-thru in the cooling mode and blow-thru in the heating mode.

**Maximum cooling airflow** — To minimize the possibility of condensate blow-off from the evaporator, airflow through the units should not exceed 450 CFM per ton.

**Minimum cooling airflow** — Minimum cooling airflow is 350 cfm per ton.

**Minimum ambient cooling operation temperature** — All standard units have a minimum ambient operating temperature of 40°F (4°C). With accessory low ambient temperature kit, units can operate at temperatures down to 0°F (-17°C).

**Minimum temperature** — Air entering the heat exchanger in heating mode must be a minimum of 50°F (10°C) continuous and/or 45°F (7°C) intermittent.

Manufacturer reserves the right to change, at any time, specifications and designs without notice and without obligations.

# Electrical Data

| MODEL | NOMINAL V-PH-HZ | VOLTAGE RANGE | | COMPRESSOR | | OFM | IFM | IDM | POWER SUPPLY | |
|---|---|---|---|---|---|---|---|---|---|---|
| | | MIN | MAX | RLA | LRA | FLA | FLA | FLA | MCA | MOCP |
| 24040, 24060 | 208/230-1-60 | 197 | 253 | 9 | 63 | 0.72 | 3.9 | 0.65 | 15.9 | 20 |
| 30040, 30060 | 208/230-1-60 | 197 | 253 | 12.5 | 67 | 1.05 | 3.9 | 0.65 | 20.6 | 30 |
| 36060, 36090 | 208/230-1-60 | 197 | 253 | 14.4 | 86 | 1.05 | 3.8 | 0.65 | 22.9 | 35 |
| 36060, 36090 | 208/230-3-60 | 197 | 253 | 9 | 70 | 1.05 | 3.8 | 0.65 | 16.2 | 25 |
| 36060, 36090 | 460-3-60 | 414 | 506 | 4.1 | 39 | 0.53 | 1.2 | 0.33 | 6.8 | 15 |
| 42060, 42090 | 208/230-1-60 | 197 | 253 | 14.8 | 109 | 1.05 | 5.8 | 0.65 | 25.4 | 40 |
| 42060, 42090 | 208/230-3-60 | 197 | 253 | 12.2 | 102.8 | 1.05 | 5.8 | 0.65 | 22.2 | 30 |
| 42060, 42090 | 460-3-60 | 414 | 506 | 5.8 | 48.5 | 0.53 | 1.7 | 0.33 | 9.5 | 15 |
| 48090, 48115 | 208/230-1-60 | 197 | 253 | 19.4 | 102 | 1.05 | 6.9 | 0.65 | 32.3 | 50 |
| 48090, 48115 | 208/230-3-60 | 197 | 253 | 12 | 123 | 1.05 | 6.9 | 0.65 | 24.4 | 35 |
| 48090, 48115 | 460-3-60 | 414 | 506 | 6.3 | 60 | 0.53 | 2.3 | 0.33 | 10.7 | 15 |
| 48130 | 208/230-1-60 | 197 | 253 | 19.4 | 102 | 1.05 | 6.9 | 0.75 | 32.3 | 50 |
| 48130 | 208/230-3-60 | 197 | 253 | 12 | 123 | 1.05 | 6.9 | 0.75 | 24.4 | 35 |
| 48130 | 460-3-60 | 414 | 506 | 6.3 | 60 | 0.53 | 2.3 | 0.52 | 10.7 | 15 |
| 60090, 60115 | 208/230-1-60 | 197 | 253 | 22.6 | 148 | 1.05 | 6.9 | 0.65 | 36.3 | 50 |
| 60090, 60115 | 208/230-3-60 | 197 | 253 | 13.1 | 93 | 1.05 | 6.9 | 0.65 | 24.4 | 35 |
| 60090, 60115 | 460-3-60 | 414 | 506 | 6.6 | 60 | 0.53 | 2.3 | 0.33 | 11.1 | 15 |
| 60130 | 208/230-1-60 | 197 | 253 | 22.6 | 148 | 1.05 | 6.9 | 0.75 | 36.3 | 50 |
| 60130 | 208/230-3-60 | 197 | 253 | 13.1 | 93 | 1.05 | 6.9 | 0.75 | 24.4 | 35 |
| 60130 | 460-3-60 | 414 | 506 | 6.6 | 60 | 0.53 | 2.3 | 0.52 | 11.1 | 15 |

LEGEND

FLA - Full Load Amps
IDM - Inducer Motor
IFM - Indoor Fan Motor
LRA -Locked Rotor Amps
MCA - Minimum Circuit Amps
MOCP - Maximum Over Current Protection
OFM - Outdoor Fan Motor
RLA - Rated Load Amps

NOTES:

1. In compliance with NEC (National Electrical Code) requirements for multimotor and combination load equipment (refer to NEC Articles 430 and 440), the overcurrent protective device for the unit shall be Power Supply fuse or circuit breaker.
2. Minimum wire size is based on 60 C copper wire. If other than 60 C wire is used, or if length exceeds wire length in table, determine size from NEC.
3. Unbalanced 3-Phase Supply Voltage
   *Never operate a motor where a phase imbalance in supply voltage is greater than 2%.* Use the following formula to determine the percentage of voltage imbalance

   % Voltage imbalance

   $$= 100 \times \frac{\text{max voltage deviation from average voltage}}{\text{average voltage}}$$

EXAMPLE: Supply voltage is 230-3-60.

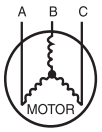


AB = 228 v
BC = 231 v
AC = 227 v

$$\text{Average Voltage} = \frac{228 + 231 + 227}{3} = \frac{686}{3} = 229$$

Determine maximum deviation from average voltage.
(AB) 229 - 228 = 1 v
(BC) 231 - 229 = 2 v
(AC) 229 - 227 = 2 v

Maximum deviation is 2 v.

Determine percent of voltage imbalance

$$\text{\% Voltage Imbalance} = 100 \times \frac{2}{229} = 0.8\%$$

This amount of phase imbalance is satisfactory as it is below the maximum allowable 2%.

IMPORTANT: If the supply voltage phase imbalance is more than 2%, contact your local electric utility company immediately.

A06564

# Connection Wiring Schematic 208/230-1-60

**CONNECTION WIRING DIAGRAM**
**DANGER: ELECTRICAL SHOCK HAZARD DISCONNECT POWER BEFORE SERVICING**

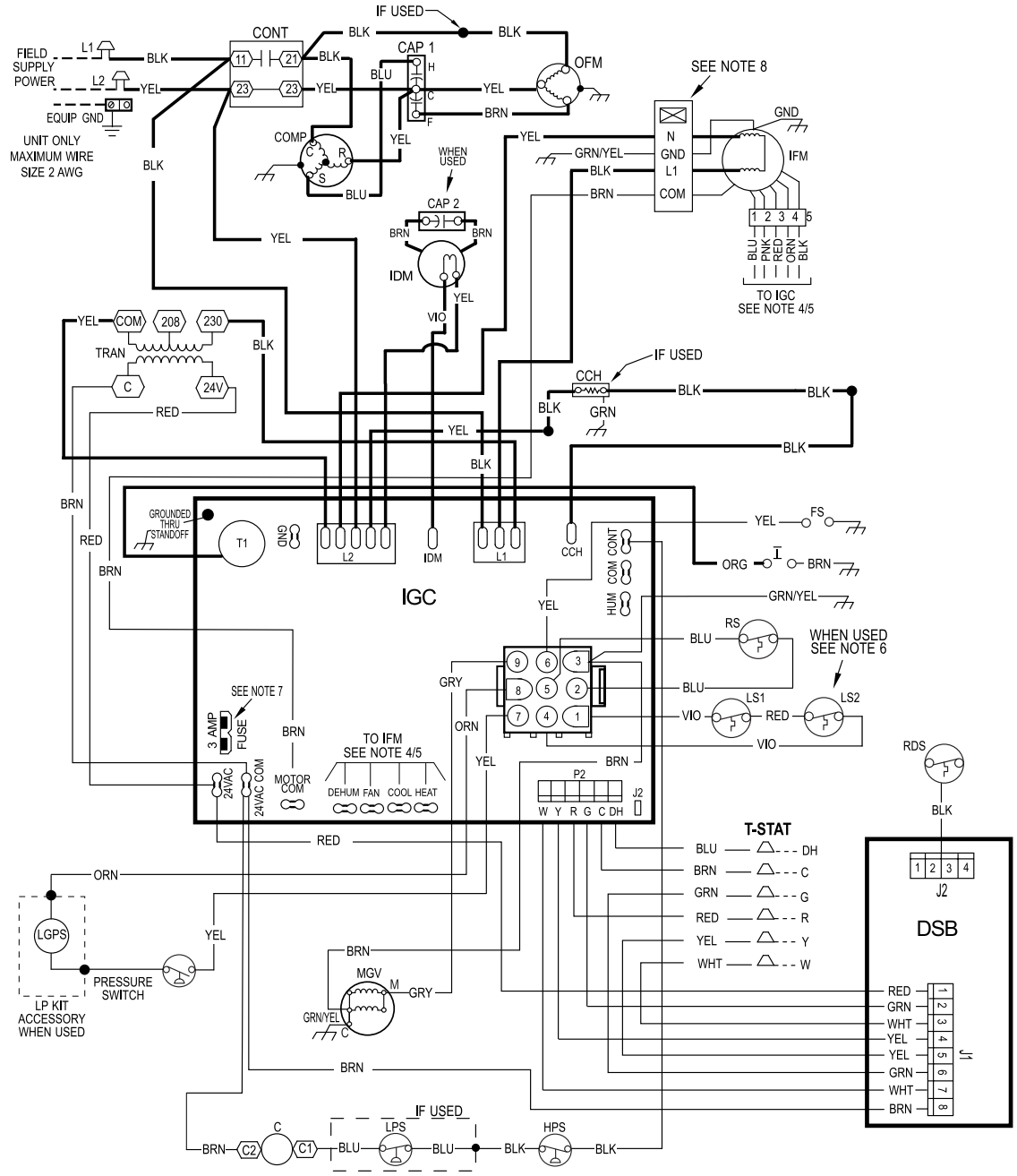


1Ø UNIT COMPONENT ARRANGEMENT

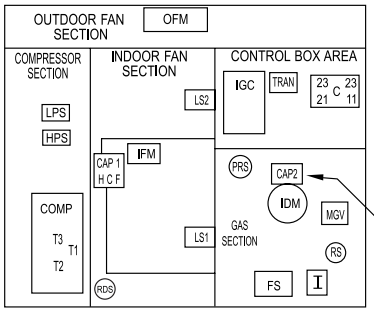


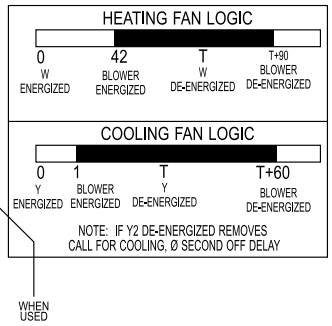


## NOTES:

1. IF ANY OF THE ORIGINAL WIRES FURNISHED ARE REPLACED THEY MUST BE REPLACED WITH THE SAME WIRE OR IT'S EQUIVALENT.
2. SEE PRE-SALE LITERATURE FOR THERMOSTATS.
3. USE 75 DEGREES C COPPER CONDUCTORS FOR FIELD INSTALLATION.
4. REFER TO INSTALLATION INSTRUCTIONS FOR CORRECT SPEED SELECTION FOR IFM.
5. SEE INSTALLATION INSTRUCTIONS FOR PROPER HEATING AND COOLING CONNECTIONS FOR YOUR UNIT.
6. ON SOME MODELS LS1 AND LS2 ARE WIRED IN SERIES. ON OTHER MODELS ONLY LS1 IS USED.
7. THIS FUSE IS MANUFACTURED BY LITTLE FUSE, P/N 287003.
8. DO NOT DISCONNECT PLUG UNDER LOAD.
9. N.E.C. CLASS 2, 24V.

A240119

# Ladder Wiring Schematic 208/230-1-60

## LADDER WIRING DIAGRAM

## DANGER: ELECTRICAL SHOCK HAZARD DISCONNECT POWER BEFORE SERVICING

### LEGEND

| | | | | | | | | | |
|---|---|---|---|---|---|---|---|---|---|
| | FIELD SPLICE | | SPLICE (MARKED) | | ACCESSORY OR OPTIONAL WIRING | CAP2 | CAPACITOR, INDUCER (WHEN USED) | DSB | DISSIPATION BOARD |
| | TERMINAL (MARKED) | | FACTORY LOW VOLTAGE | | FACTORY HI VOLTAGE | CCH | CRANKCASE HEATER | EQUIP | EQUIPMENT |
| | TERMINAL (UNMARKED) | | FIELD CONTROL WIRING | C | CONTACTOR | CHS | CRANKCASE HEATER SWITCH | FS | FLAME SENSOR |
| | SPLICE | | FIELD POWER WIRING | CAP1 | CAPACITOR, COMP | COMP | COMPRESSOR MOTOR | GND | GROUND |

| | | | | | | | |
|---|---|---|---|---|---|---|---|
| HPS | HIGH PRESSURE SWITCH | IGC | INTEGRATED GAS UNIT CONTROLLER | LS2 | SECONDARY LIMIT SWITCH | RDS | REFRIG. DETECTION SENSOR |
| I | IGNITOR | LGPS | LOW GAS PRESSURE SWITCH (WHEN USED) | MGV | MAIN GAS VALVE | RS | ROLLOUT SWITCH |
| IDM | INDUCED DRAFT MOTOR | LPS | LOW PRESSURE SWITCH | OFM | OUTDOOR FAN MOTOR | TRAN | TRANSFORMER |
| IFM | INDOOR FAN MOTOR | LS1 | PRIMARY LIMIT SWITCH | OT | QUADRUPLE TERMINAL | T-STAT | THERMOSTAT |

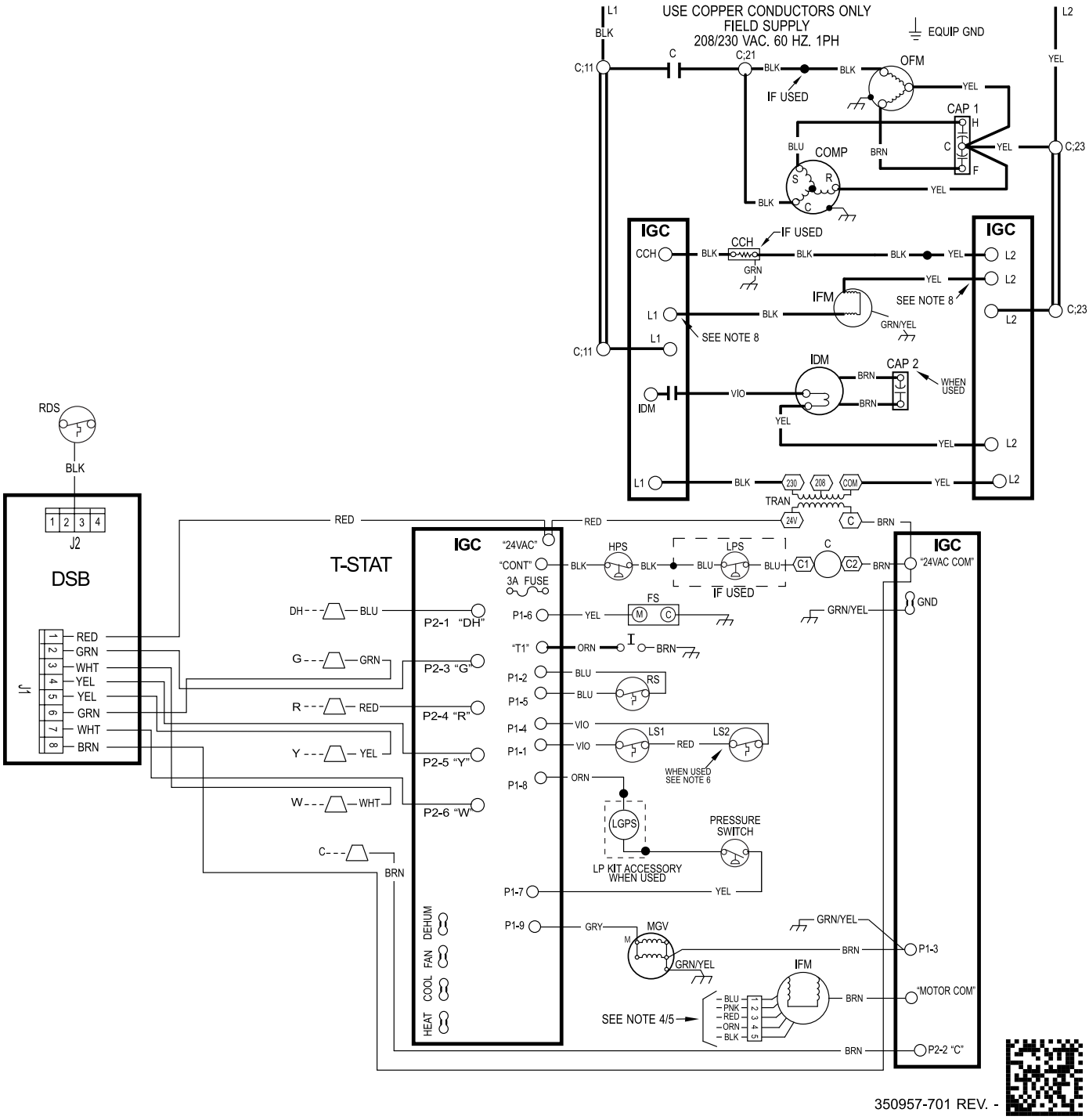


350957-701 REV. -

A240120

# Connection Wiring Schematic 208/230-3-60

## CONNECTION WIRING DIAGRAM
## DANGER: ELECTRICAL SHOCK HAZARD DISCONNECT POWER BEFORE SERVICING

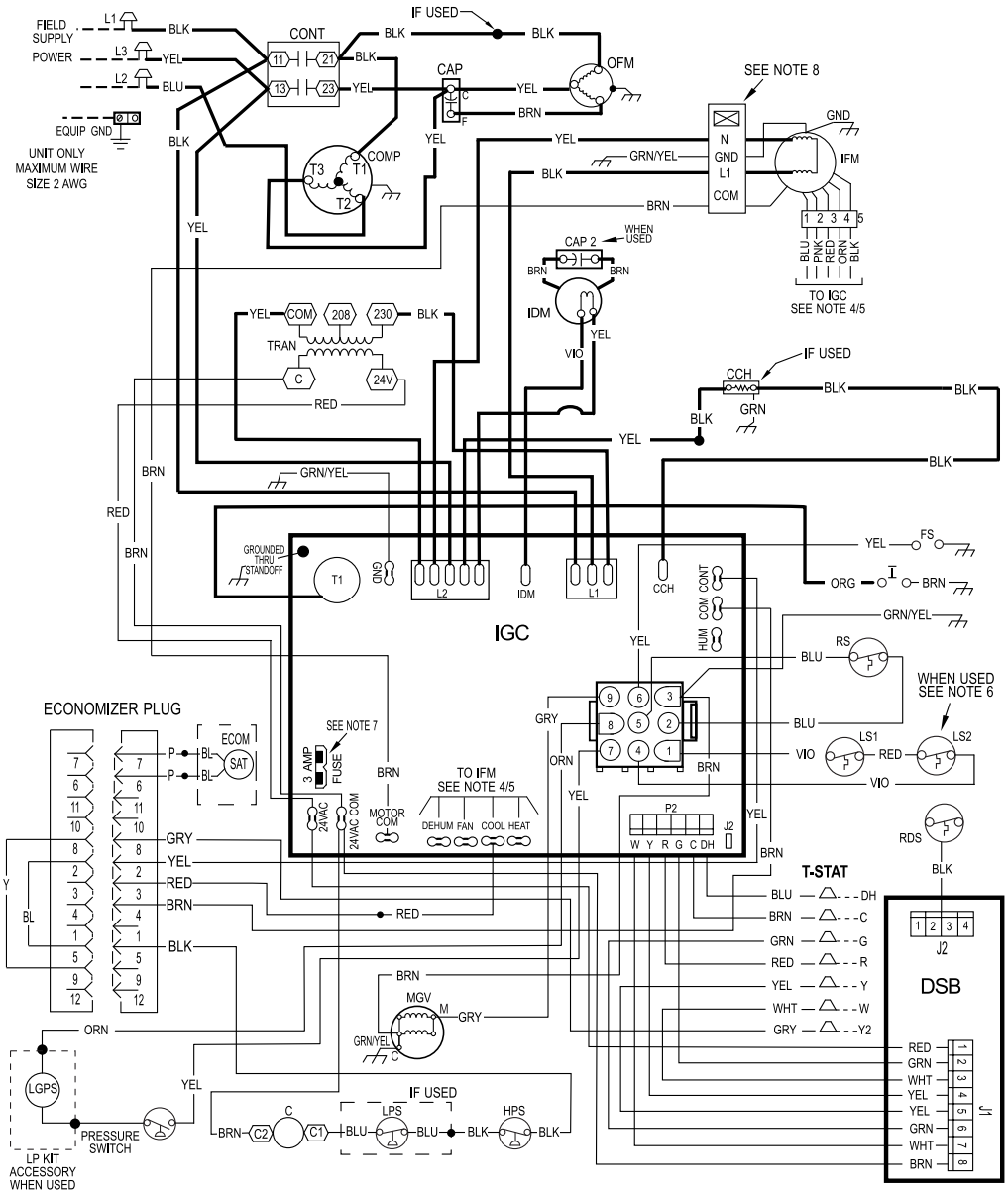


### 3Ø UNIT COMPONENT ARRANGEMENT

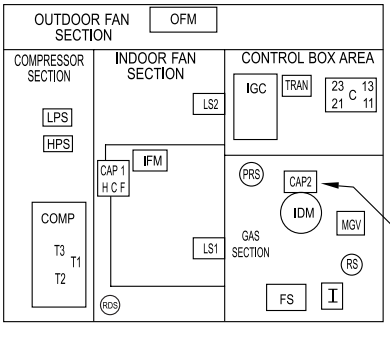


### HEATING FAN LOGIC

| 0 | 42 | T | T+90 |
|---|---|---|---|
| W ENERGIZED | BLOWER ENERGIZED | W DE-ENERGIZED | BLOWER DE-ENERGIZED |

### COOLING FAN LOGIC

| 0 | 1 | T | T+60 |
|---|---|---|---|
| Y ENERGIZED | BLOWER ENERGIZED | Y DE-ENERGIZED | BLOWER DE-ENERGIZED |

NOTE: IF Y2 DE-ENERGIZED REMOVES CALL FOR COOLING, Ø SECOND OFF DELAY

## NOTES:

1. IF ANY OF THE ORIGINAL WIRES FURNISHED ARE REPLACED THEY MUST BE REPLACED WITH THE SAME WIRE OR IT'S EQUIVALENT.
2. SEE PRE-SALE LITERATURE FOR THERMOSTATS.
3. USE 75 DEGREES C COPPER CONDUCTORS FOR FIELD INSTALLATION.
4. REFER TO INSTALLATION INSTRUCTIONS FOR CORRECT SPEED SELECTION FOR IFM.
5. SEE INSTALLATION INSTRUCTIONS FOR PROPER HEATING AND COOLING CONNECTIONS FOR YOUR UNIT.
6. ON SOME MODELS LS1 AND LS2 ARE WIRED IN SERIES. ON OTHER MODELS ONLY LS1 IS USED.
7. THIS FUSE IS MANUFACTURED BY LITTLE FUSE, P/N 287003.
8. DO NOT DISCONNECT PLUG UNDER LOAD.
9. N.E.C. CLASS 2, 24V.

A240122

# Ladder Wiring Schematic 208/230-3-60

## LADDER WIRING DIAGRAM
## DANGER: ELECTRICAL SHOCK HAZARD DISCONNECT POWER BEFORE SERVICING

### LEGEND

| | | | | | | | |
|---|---|---|---|---|---|---|---|
| FIELD SPLICE | | SPLICE (MARKED) | | ACCESSORY OR OPTIONAL WIRING | | | |
| TERMINAL (MARKED) | | FACTORY LOW VOLTAGE | | FACTORY HI VOLTAGE | CAP2 | CAPACITOR, INDUCER (WHEN USED) | DSB DISSIPATION BOARD |
| TERMINAL (UNMARKED) | | FIELD CONTROL WIRING | C | CONTACTOR | CCH | CRANKCASE HEATER | EQUIP EQUIPMENT |
| SPLICE | | FIELD POWER WIRING | CAP1 | CAPACITOR, COMP | CHS | CRANKCASE HEATER SWITCH | FS FLAME SENSOR |
| | | | | | COMP | COMPRESSOR MOTOR | GND GROUND |
| HPS | HIGH PRESSURE SWITCH | IFM | INDOOR FAM MOTOR | | LS1 | PRIMARY LIMIT SWITCH | OT QUADRUPLE TERMINAL |
| HUM | HUMIDIFIER ACCESSORY TERMINAL | IGC | INTEGRATED GAS UNIT CONTROLLER | | LS2 | SECONDARY LIMIT SWITCH | RDS REFRIG. DETECTION SENSOR |
| I | IGNITOR | LGPS | LOW GAS PRESSURE SWITCH (WHEN USED) | | MGV | MAIN GAS VALVE | RS ROLLOUT SWITCH |
| IDM | INDUCED DRAFT MOTOR | LPS | LOW PRESSURE SWITCH | | OFM | OUTDOOR FAN MOTOR | TRAN TRANSFORMER |
| | | | | | | | T-STAT THERMOSTAT |

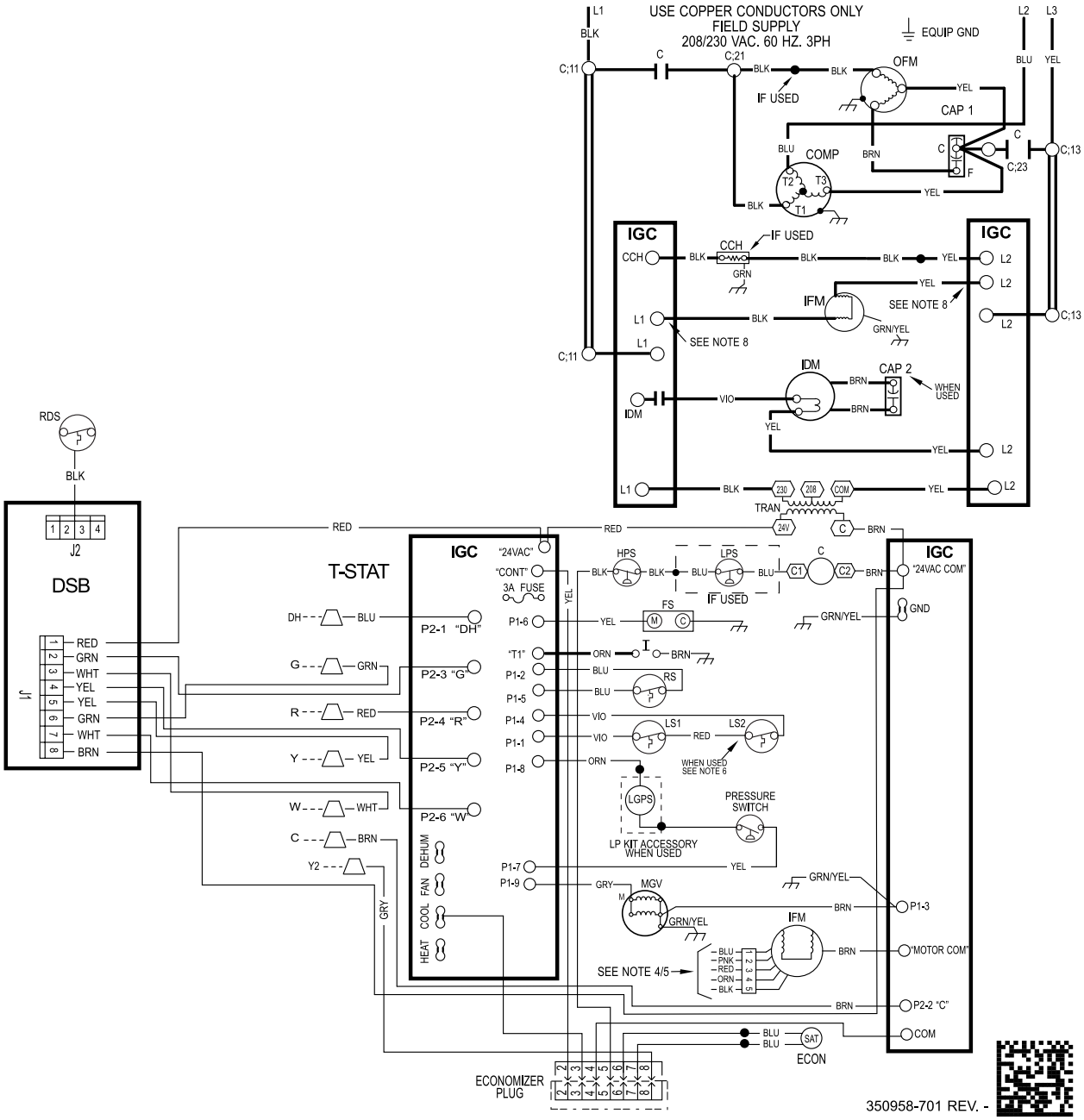


A240123

# Connection Wiring Schematic 460-3-60

**CONNECTION WIRING DIAGRAM**
**DANGER: ELECTRICAL SHOCK HAZARD DISCONNECT POWER BEFORE SERVICING**

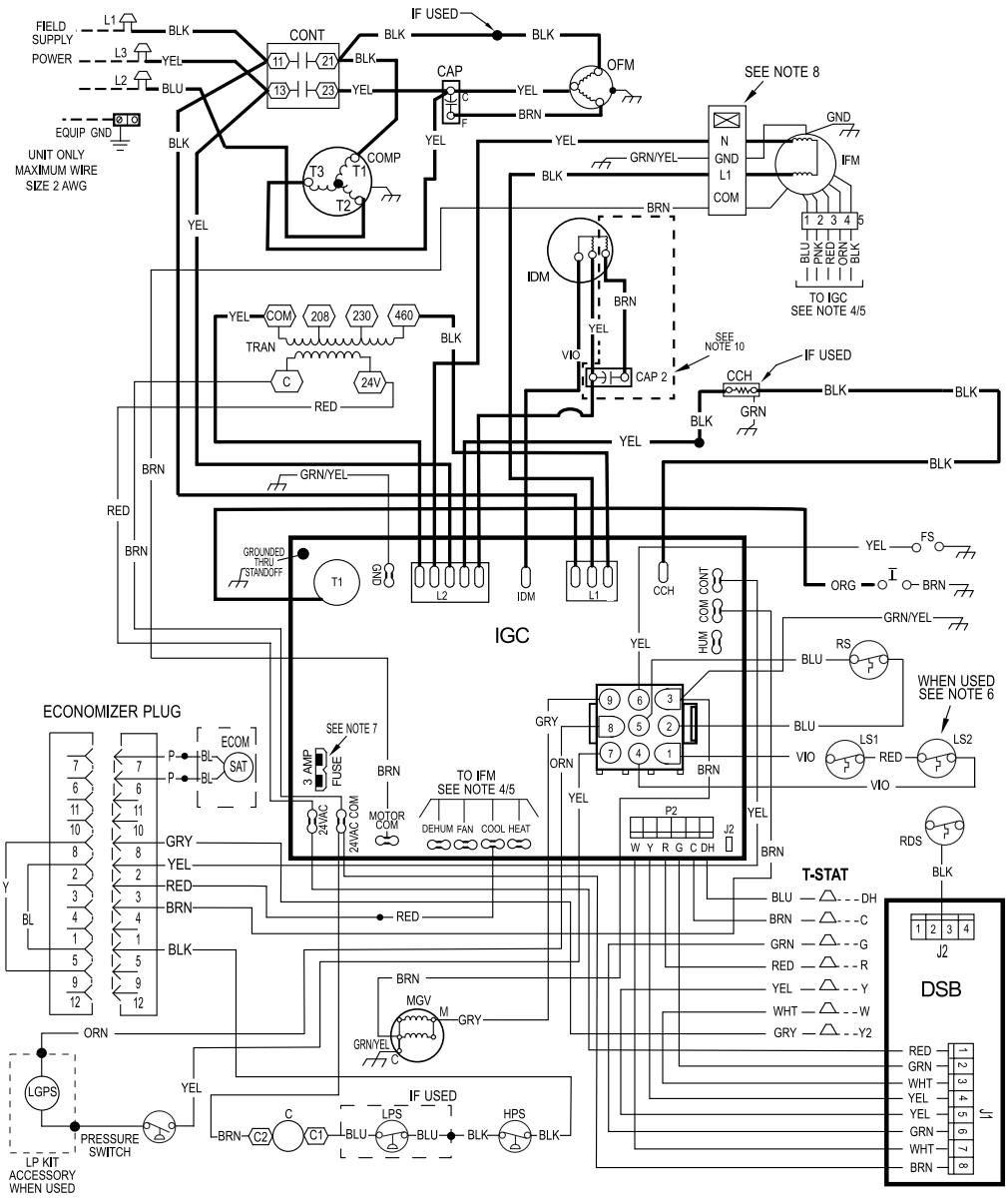


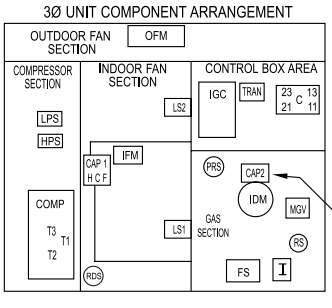


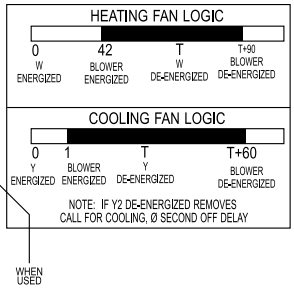


## NOTES:

1. IF ANY OF THE ORIGINAL WIRES FURNISHED ARE REPLACED THEY MUST BE REPLACED WITH THE SAME WIRE OR IT'S EQUIVALENT.
2. SEE PRE-SALE LITERATURE FOR THERMOSTATS.
3. USE 75 DEGREES C COPPER CONDUCTORS FOR FIELD INSTALLATION.
4. REFER TO INSTALLATION INSTRUCTIONS FOR CORRECT SPEED SELECTION FOR IFM.
5. SEE INSTALLATION INSTRUCTIONS FOR PROPER HEATING AND COOLING CONNECTIONS FOR YOUR UNIT.
6. ON SOME MODELS LS1 AND LS2 ARE WIRED IN SERIES. ON OTHER MODELS ONLY LS1 IS USED.
7. THIS FUSE IS MANUFACTURED BY LITTLE FUSE, P/N 287003.
8. DO NOT DISCONNECT PLUG UNDER LOAD.
9. N.E.C. CLASS 2, 24V.
10. INDUCER CAPACITOR AND WIRING ON CERTAIN MODELS ONLY. IF CAP2 IS PRESENT, YELLOW WIRES FROM IGC "L2" AND IDM CONNECT ON THE SAME SIDE OF CAP2

A240121

# Ladder Wiring Schematic 460-3-60

**LADDER WIRING DIAGRAM**
**DANGER: ELECTRICAL SHOCK HAZARD DISCONNECT POWER BEFORE SERVICING**

## LEGEND

| | | | | | | | |
|---|---|---|---|---|---|---|---|
| △ | FIELD SPLICE | ⬭ | SPLICE (MARKED) | - - - | ACCESSORY OR OPTIONAL WIRING | **CAP2** | CAPACITOR, INDUCER (WHEN USED) |
| ⬭ | TERMINAL (MARKED) | —— | FACTORY LOW VOLTAGE | ▬ | FACTORY HI VOLTAGE | **CCH** | CRANKCASE HEATER |
| ○ | TERMINAL (UNMARKED) | — — | FIELD CONTROL WIRING | **C** | CONTACTOR | **CHS** | CRANKCASE HEATER SWITCH |
| ● | SPLICE | —·— | FIELD POWER WIRING | **CAP1** | CAPACITOR, COMP | **COMP** | COMPRESSOR MOTOR |

| | | | | | | | |
|---|---|---|---|---|---|---|---|
| **HPS** | HIGH PRESSURE SWITCH | **IFM** | INDOOR FAM MOTOR | **LS1** | PRIMARY LIMIT SWITCH | **OT** | QUADRUPLE TERMINAL |
| **HUM** | HUMIDIFIER ACCESSORY TERMINAL | **IGC** | INTEGRATED GAS UNIT CONTROLLER | **LS2** | SECONDARY LIMIT SWITCH | **RDS** | REFRIG. DETECTION SENSOR |
| **I** | IGNITOR | **LGPS** | LOW GAS PRESSURE SWITCH (WHEN USED) | **MGV** | MAIN GAS VALVE | **RS** | ROLLOUT SWITCH |
| **IDM** | INDUCED DRAFT MOTOR | **LPS** | LOW PRESSURE SWITCH | **OFM** | OUTDOOR FAN MOTOR | **TRAN** | TRANSFORMER |
| | | | | | | **T-STAT** | THERMOSTAT |

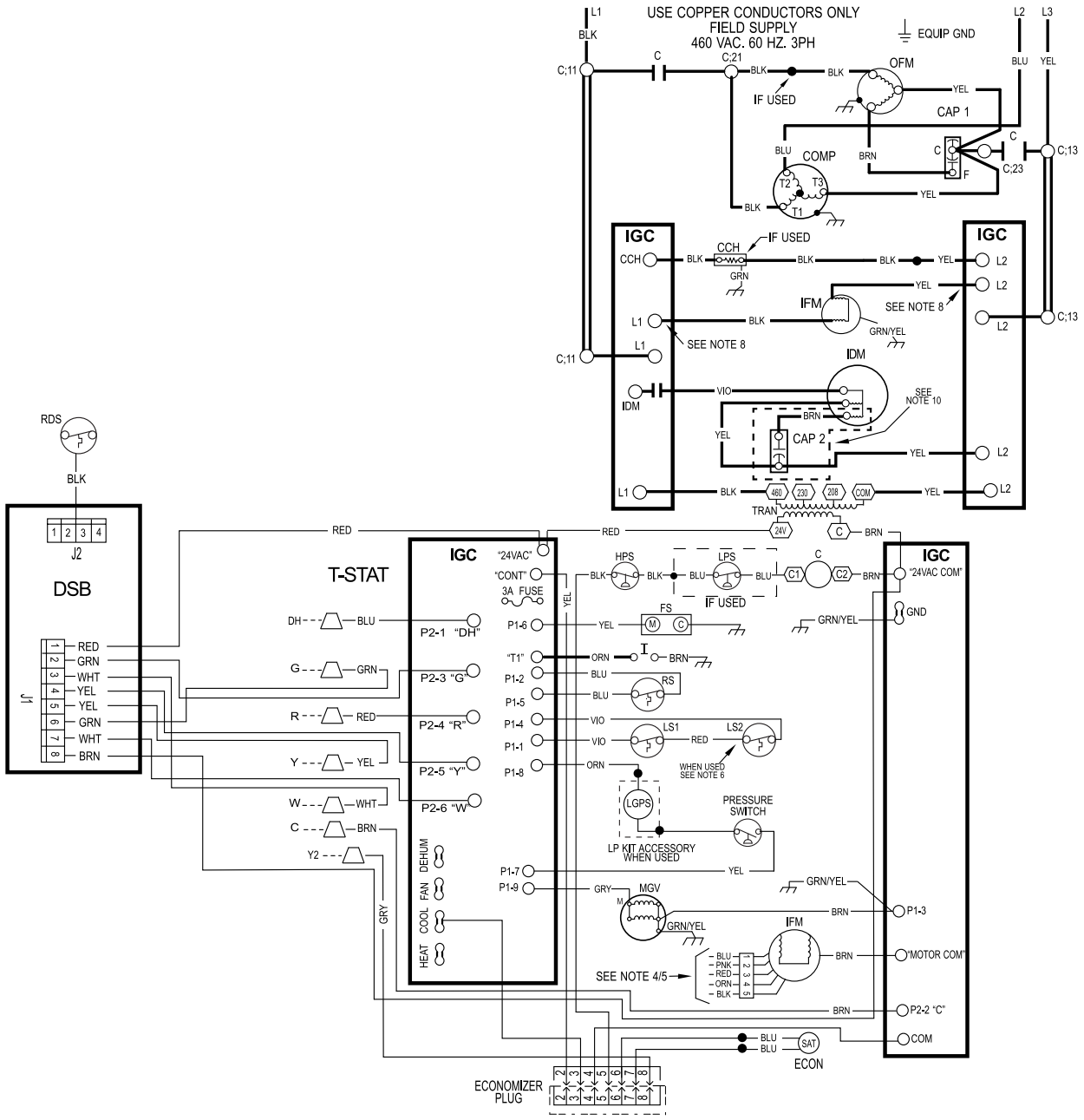


A240124

# Controls

## Operating sequence

**Heating** On a call for heating, terminal W of the thermostat is energized, starting the induced-draft motor for a 5 second pre-purge. When the pressure switch senses that the induced-draft motor is moving sufficient combustion air, the burner sequence begins. his function is controlled by the integrated gas unit controller (IGC). The indoor (evaporator) –fan motor is energized 30 seconds after flame is established. When the thermostat is satisfied and W is de-energized, the burners stop firing and the indoor (evaporator) fan motor shuts off after a 90 second time-off delay. Please note that the IGC has the capability to automatically reduce the indoor fan motor on delay and increase the indoor fan motor off delay in the event of high duct static and/or a partially-clogged filter.

**Cooling** — When the system thermostat calls for cooling, 24 V is supplied to the “Y” and “G” terminals of the thermostat. This completes the circuit to the contactor coil (C) and indoor (evaporator) fan relay (IFR). The normally open contacts of energized C close and complete the circuit through compressor motor (COMP) to outdoor (condenser) fan motor (OFM). Both motors start instantly. The set of normally open contacts of energized IFR close and complete the circuit through IFM. The IFM starts instantly.

On the loss of the thermostat call for cooling, 24 V is removed from both the “Y” and “G” terminals (provided the fan switch is in the “AUTO” position) de-energizing the compressor contactor and opening the contacts supplying power to compressor/OFM. After a 60-second delay (1-phase) or 90-second delay (3-phase), the IFM shuts off. If the thermostat fan selector switch is in the “ON” position, the IFM will run continuously.

# Guide Specifications

## Packaged Gas Heating/Electric Cooling Units Constant Volume Application

## HVAC Guide Specifications

Size Range:**2 to 5 Tons, Nominal Cooling**
**40,000 to 127,000 Btuh,**
**Nominal Heating Input**

## General

**SYSTEM DESCRIPTION**

Outdoor rooftop mounted, gas heating/electric cooling unit utilizing a hermetic scroll compressor for cooling duty. Unit shall discharge supply air vertically or horizontally as shown on contract drawings. Condenser fan/coil section shall have a draw-thru design with vertical discharge for minimum sound levels.

**QUALITY ASSURANCE**

- Unit shall be rated in accordance with AHRI Standards 210/240 and 270-1995.
- Unit shall be designed and certified in accordance with UL Standard 60335-2-40, 60335-1 and CSA/ANSI Z21.47.
- Unit shall be manufactured in a facility registered to ISO 9001 manufacturing quality standard.
- Roof curb shall be designed to conform to NRCA Standards.
- Insulation and adhesives shall meet NFPA 90.1 requirements for flame spread and smoke generation.
- Cabinet insulation shall meet ASHRAE Standard 62.2.

**DELIVERY, STORAGE AND HANDLING**

- Unit shall be stored and handled per manufacturer's recommendations.

## Products

**EQUIPMENT**

**General**:

Factory-assembled, single-piece, heating and cooling unit. Contained within the enclosure shall be all factory wiring, piping, controls, refrigerant charge with R-454B refrigerant, and special features required prior to field start-up.

**Unit Cabinet:**

- Unit cabinet shall be constructed of phosphated, zinc-coated, pre-painted steel capable of with-standing 500 hours in salt spray.
- Normal service shall be through 3 removable cabinet panels.
- The unit shall be constructed on a rust proof unit base that has an externally trapped, integrated sloped drain.
- Evaporator fan compartment top surface shall be insulated with a minimum 1/2-in. (12.7 mm) thick, flexible fiberglass insulation, coated on the air side and retained by adhesive and mechanical means. The evaporator wall sections will be insulated with a minimum semi-rigid foil-faced board capable of being wiped clean. Aluminum foil-faced fiberglass insulation shall be used in the entire indoor air cavity section.
- Unit shall have a field-supplied condensate trap.

**Fans:**

- The evaporator fan shall be a multi-speed, direct-drive, as shown on equipment drawings.
- Fan wheel shall be made from steel, be double-inlet type with forward curved blades with corrosion resistant finish. Fan wheel shall be dynamically balanced.
- Condenser fan shall be direct drive propeller type with aluminum blades riveted to corrosion resistant steel spiders, be dynamically balanced, and discharge air vertically.

**Compressor:**

- Fully hermetic compressors with factory-installed vibration isolation.

**Coils:**

- Aluminum tubes on indoor coil. Copper tubes on outdoor coil.

**Heating Section:**

- Induced-draft combustion type with energy saving direct spark ignition system and redundant main gas valve.
- Induced-draft motors shall provide adequate airflow for combustion.
- The heat exchangers shall be constructed of stainless steel for corrosion resistance.
- Burners shall be of the in-shot type constructed of aluminum coated steel.
- All gas piping and electric power shall enter the unit cabinet at a single location.

**Refrigerant Components:**

Refrigerant expansion device shall be of the TXV (thermostatic expansion valve) or fixed orifice type.

**Filters:**

Filter section shall consist of field-installed, throwaway, 1-in. (25 mm) thick fiberglass filters of commercially available sizes.

**Controls and Safeties:**

- Unit controls shall be complete with a self-contained low voltage control circuit.
- Compressors shall incorporate a solid-state compressor protector that provides reset capability.

**Operating Characteristics:**

- Unit shall be capable of starting and running at 125°F (51°C) ambient outdoor temperature per maximum load criteria of AHRI Standard 210.
- Compressor with standard controls shall be capable of operation down to 40°F (4°C) ambient outdoor temperature.
- Units shall be provided with fan time delay to prevent cold air delivery before the heat exchanger warms up.
- Unit shall be provided with 60-second fan time delay (single phase models) or 90 second fan time delay (three phase models) after the thermostat is satisfied.

**Electrical Requirements:**

All unit power wiring shall enter the unit cabinet at a single location.

**Motors:**

- Compressor motors shall be of the refrigerant-cooled type with line-break thermal and current overload protection.
- All fan motors shall have permanently lubricated bearings, and inherent, automatic reset, thermal overload protection.
- Condenser fan motor shall be totally enclosed.
- Evaporator Fan Motor to be ECM Motor.

**Compressor Protection:**

Solid-state control shall protect compressor by preventing "short cycling."

Manufacturer reserves the right to change, at any time, specifications and designs without notice and without obligations.

## Guide Specifications (Continued)

**Low NOx:**

Shall provide NOx reduction to meet 40 ng/J NOx emissions requirements as shipped from the factory.

**Accessory Kits Available:**

1. Coil Options
   Base unit with tin plated indoor coil hairpins available as a factory installed option.
2. Compressor Start Kit (single phase units only):
   Shall provide additional starting torque for single-phase compressors.
3. Crankcase Heater:
   Shall provide anti-floodback protection for low-load cooling applications.
4. Economizer:
   (Horizontal - Field installed accessory)
   (Vertical - Field installed accessory)
   a. Economizer controls capable of providing free cooling using outside air.
   b. Equipped with low leakage dampers not to exceed 3% leakage, at 1.0 IN. W.C. pressure differential.
   c. Spring return motor shuts off outdoor damper on power failure.
5. Filter Rack Kit:
   Shall provide filter mounting for downflow applications. Offered as a field installed accessory.
6. Flat Roof Curb:
   Curbs shall have seal strip and a wood nailer for flashing and shall be installed per manufacturer's instructions.
7. Flue Discharge Deflector
   Directs flue gas exhaust; 90 degrees upward from current discharge.
8. High Altitude Propane Conversion Kit:
   Shall consist of all required hardware to convert to propane gas heat operation at 2001 to 6000 ft (611 to 1829 m) above sea level.
9. Low Ambient Package:
   Pressure-based control to allow cooling operation down to 0° F (-17.7°C).
10. Manual Outdoor Air Damper:
    Package shall consist of damper, birdscreen, and rainhood which can be preset to admit outdoor air for year-round ventilation.
11. Natural-to-Propane Conversion Kit:
    Shall be complete with all required hardware to convert to propane gas operation at 10.0 IN. W.C. manifold pressure.
12. Propane-to-Natural Conversion Kit
    Shall be complete with all hardware to convert to natural gas at standard altitude (0 to 2000 ft [0 to 610 m] above sea level).
13. Square-To-Round Duct Transitions (24-48 models):
    Shall have the ability to convert the supply and return openings from rectangular to round.
14. Low Pressure Switch Kit
    Kit is designed for use when a low pressure control in desired. This kit provides added reliability for the compressor.

© 2025 Carrier. All rights reserved.

**Catalog No: 48NL-04PD**
Replaces: **48NL-03PD**
Edition Date: 09/25

**Manufacturer reserves the right to change, at any time, specifications and designs without notice and without obligations.**