48TC**17 – 30
Nominal 15 to 27.5 Tons
with Puron® (R–410A) Refrigerant

Carrier

United Technologies
turn to the experts

Service and Maintenance Instructions

TABLE OF CONTENTS

SAFETY CONSIDERATIONS 1

UNIT ARRANGEMENT AND ACCESS 3

SUPPLY FAN (BLOWER) SECTION 4

STAGED AIR VOLUME (SAV) CONTROL: 2–SPEED FAN WITH VARIABLE FREQUENCY DRIVE (VFD) 6

ADDITIONAL VFD INSTALLATION AND TROUBLESHOOTING 6

CONDENSER COIL SERVICE 8

EVAPORATOR COILS 10

HUMIDI–MIZER® DEHUMIDIFICATION SYSTEM 11

THERMOSTATIC EXPANSION VALVE (TXV) 17

PURON® (R–410A) REFRIGERANT 19

COOLING CHARGING CHARTS 20

COMPRESSORS 24

TROUBLESHOOTING THE COOLING SYSTEM . . 26

CONVENIENCE OUTLETS 27

SMOKE DETECTORS 28

INDICATORS 34

PROTECTIVE DEVICES 35

PREMIERLINK™ CONTROL 37

RTU–OPEN CONTROL SYSTEM 38

GAS HEATING SYSTEM 40

ECONOMI$ER SYSTEMS 51

PRE–START–UP/START–UP 60

START–UP, PREMIERLINK™ CONTROLS 62

START–UP, RTU–OPEN CONTROLS 63

APPENDIX I. MODEL NO. NOMENCLATURE 64

APPENDIX II. PHYSICAL DATA 65

APPENDIX III. FAN PERFORMANCE 75

APPENDIX IV. WIRING DIAGRAMS 81

APPENDIX V. MOTORMASTER SENSOR LOCATIONS 94

UNIT START-UP CHECKLIST 95

SAFETY CONSIDERATIONS

Installation and servicing of air-conditioning equipment can be hazardous due to system pressure and electrical components. Only trained and qualified service personnel should install, repair, or service air-conditioning equipment. Untrained personnel can perform the basic maintenance functions of replacing filters. Trained service personnel should perform all other operations.

When working on air-conditioning equipment, observe precautions in the literature, tags and labels attached to the unit, and other safety precautions that may apply. Follow all safety codes. Wear safety glasses and work gloves. Use quenching cloth for unbrazing operations. Have fire extinguishers available for all brazing operations.

Follow all safety codes. Wear safety glasses and work gloves. Use quenching cloth for brazing operations. Have fire extinguisher available. Read these instructions thoroughly and follow all warnings or cautions attached to the unit. Consult local building codes and National Electrical Code (NEC) for special requirements.

Recognize safety information. This is the safety–alert symbol ⚠. When you see this symbol on the unit and in instructions or manuals, be aware of the potential for physical injury hazards.

Understand the signal words **DANGER**, **WARNING**, and **CAUTION**. These words are used with the safety–alert symbol. **DANGER** identifies a hazardous situation which, if not avoided, **will** result in death or severe personal injury. **WARNING** indicates a hazardous situation which, if not avoided, **could** result in death or personal injury. **CAUTION** indicates a hazardous situation which, if not avoided, **could** result in minor to moderate injury or product and property damage. **NOTICE** is used to address practices not related to physical injury. **NOTE** is used to highlight suggestions which **will** result in enhanced installation, reliability, or operation.

⚠ CAUTION

CUT HAZARD

Failure to follow this caution may result in personal injury.

Sheet metal parts may have sharp edges or burrs. Use care and wear appropriate protective clothing, safety glasses and gloves when handling parts and servicing air conditioning equipment.

⚠ WARNING

FIRE, EXPLOSION HAZARD

Failure to follow this warning could result in death, personal personal injury and/or property damage.

Never use air or gases containing oxygen for leak testing or for operating refrigerant compressors. Pressurized mixtures of air or gases containing oxygen can lead to an explosion.

⚠ WARNING

FIRE, EXPLOSION HAZARD

Failure to follow this warning could result in death, personal personal injury and/or property damage.

Never use non−certified refrigerants in this product. Non−certified refrigerant could contain contaminant that could lead to unsafe operating conditions. Use ONLY refrigerants that conform to AHRI Standard 700.

⚠ WARNING

UNIT OPERATION AND SAFETY HAZARD

Failure to follow this warning could cause personal injury, death and/or equipment damage.

This system uses Puron® refrigerant which has higher pressures than R−22 and other refrigerants. No other refrigerant may be used in this system. Gauge set, hoses, and recovery system must be designed to handle Puron refrigerant. If unsure about equipment, consult the equipment manufacturer.

⚠ CAUTION

UNIT DAMAGE HAZARD

Failure to follow this caution can result in reduced unit performance or unit shutdown.

High velocity water from a pressure washer, garden hose, or compressed air should never be used to clean a coil. The force of the water or air jet will bend the fin edges and increase airside pressure drop.

NOTICE

OPERATIONAL TEST ALERT

Failure to follow this ALERT could result in an unnecessary evacuation of the facility.

Pressing the controller's test/reset switch for longer than seven seconds will put the duct detector into the alarm state and activate all automatic alarm responses.

⚠ WARNING

ELECTRICAL SHOCK HAZARD

Failure to follow this warning could cause personal injury or death.

Before performing service or maintenance operations on the fan system, shut off all unit power and Lockout/Tagout the unit disconnect switch. **DO NOT** reach into the fan section with power still applied to the unit.

⚠ WARNING

ELECTRICAL OPERATION HAZARD

Failure to follow this warning could result in personal injury or death.

Units with convenience outlet circuits may use multiple disconnects. Check the convenience outlet for power status before opening the unit for service. Locate its disconnect switch, if appropriate, and open it. Lockout/Tagout this switch if necessary.

IMPORTANT: Lockout/Tagout is a term used when electrical power switches are physically locked, preventing power to the unit. A placard is placed on the power switch, alerting personnel that the power is disconnected.

UNIT ARRANGEMENT AND ACCESS

General

Fig. 1 and Fig. 2 show general unit arrangement and access locations.

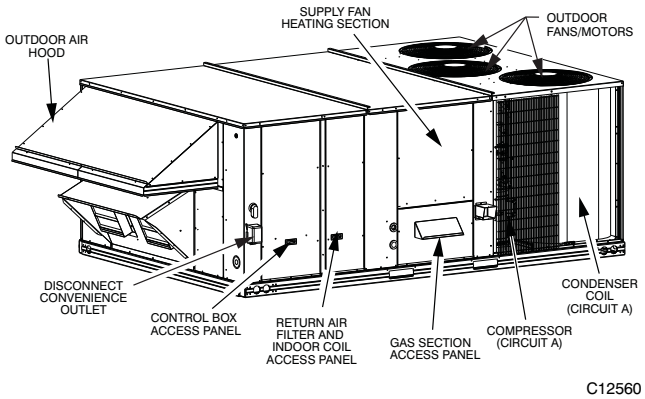

Fig. 1 – Access Panels and Components, Front

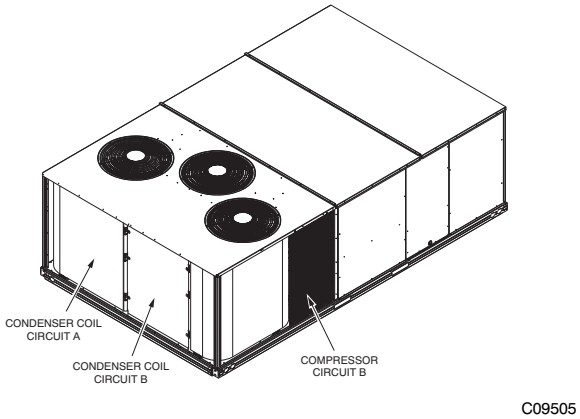

Fig. 2 – Typical Access Panel Locations, Rear

Routine Maintenance

These items should be part of a routine maintenance program, to be checked every month or two, until a specific schedule for each can be identified for this installation:

Quarterly Inspection (and 30 days after initial start)

The 48TC units should be inspected and serviced every three months.

- Return air filter replacement
- Outdoor hood inlet filters cleaned
- Belt tension checked
- Belt condition checked
- Pulley alignment checked
- Fan shaft bearing locking collar tightness checked
- Condenser coil cleanliness checked
- Condensate drain checked

Seasonal Maintenance

These items should be checked at the beginning of each season (or more often if local conditions and usage patterns dictate):

Air Conditioning

- Condenser fan motor mounting bolts tightness
- Compressor mounting bolts
- Condenser fan blade positioning
- Control box cleanliness and wiring condition
- Wire terminal tightness
- Refrigerant charge level
- Evaporator coil cleaning
- Evaporator blower motor amperage

Heating

- Heat exchanger flue passageways cleanliness
- Gas burner condition
- Gas manifold pressure
- Heating temperature rise

Economizer or Outside Air Damper

- Inlet filters condition
- Check damper travel (economizer)
- Check gear and dampers for debris and dirt

Air Filters and Screens

Each unit is equipped with return air filters. If the unit has an economizer, it will also have an outside air screen. If a manual outside air damper is added, an inlet air screen will also be present.

Each of these filters and screens will need to be periodically replaced or cleaned.

Return Air Filters

Return air filters are disposable fiberglass media type. Access to the filters is through the small lift–out panel located on the rear side of the unit, above the evaporator/return air access panel. (See Fig. 1.)

⚠ CAUTION

EQUIPMENT DAMAGE HAZARD

Failure to follow this CAUTION can result in premature wear and damage to equipment.

DO NOT OPERATE THE UNIT WITHOUT THE RETURN AIR FILTERS IN PLACE. Dirt and debris on heat exchangers and coils can cause excessive current use, resulting in motor failure.

Removing the Return Air Filters

1. Remove the return air filter and indoor coil access panel. See Fig. 1.
2. Reach inside and remove filters from the filter rack.
3. Replace these filters as required with similar replacement filters of same size.
4. Re–install the return air filter and indoor coil access panel.

Outdoor Air Hood

Outside air hood inlet screens are permanent aluminum–mesh type filters. See Fig. 2. Inspect these screens for cleanliness. Remove the screens when cleaning is required. Clean by washing with hot low–pressure water and soft detergent and replace all screens before restarting the unit. Observe the flow direction arrows on the side of each filter frame.

Economizer Inlet Air Screen

This air screen is retained by spring clips under the top edge of the hood. (See Fig. 3.)

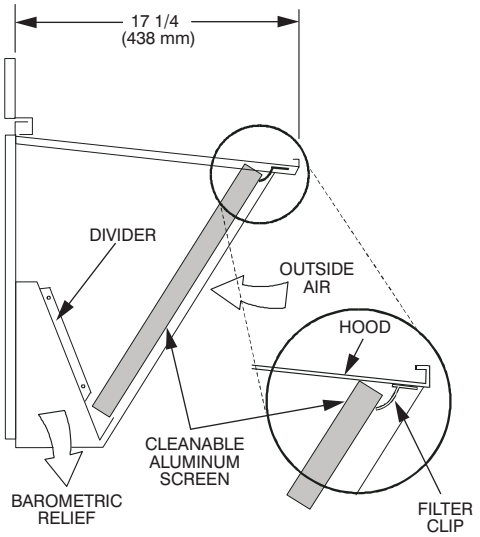

Fig. 3 – Inlet Air Screen Installation

Remove screens be removing the screws in the horizontal clips on the leading edge of the hood. Slide the filters out. See Fig. 3.

Install the filters by sliding clean or new filters into the hood side retainers. Once positioned, re–install the horizontal clips.

SUPPLY FAN (BLOWER) SECTION

⚠ WARNING

ELECTRICAL SHOCK HAZARD

Failure to follow this warning could cause personal injury or death.

Before performing service or maintenance operations on the fan system, shut off all unit power and Lockout/Tagout the unit disconnect switch. **DO NOT** reach into the fan section with power still applied to the unit.

Supply Fan Assembly

The supply fan system consists of two forward–curved centrifugal blower wheels mounted on a solid blower shaft that is supported by two greasable pillow block concentric bearings. A fixed–pitch driven fan pulley is attached to the fan shaft and an adjustable–pitch driver pulley is mounted on the motor. The pulleys are connected using a V–belt. (See Fig. 4.)

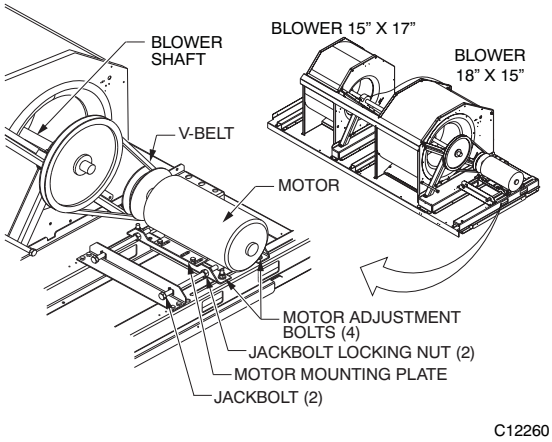

Fig. 4 – Belt Drive Motor Mounting

Belt

Check the belt condition and tension quarterly. Inspect the belt for signs of cracking, fraying or glazing along the inside surfaces. Check belt tension by using a spring–force tool, such as Browning's "Belt Tension Checker" (p/n 1302546 or equivalent tool); tension should be 6–lbs at a 5/8–in. (1.6 cm) deflection when measured at the center line of the belt span. This point is at the center of the belt when measuring the distance between the motor shaft and the blower shaft. See Fig. 5.

NOTE: Without the spring–tension tool, place a straight edge across the belt surface at the pulleys, then push down on the belt at mid–span using one finger until a 1/2–in. (1.3 cm) deflection is reached.

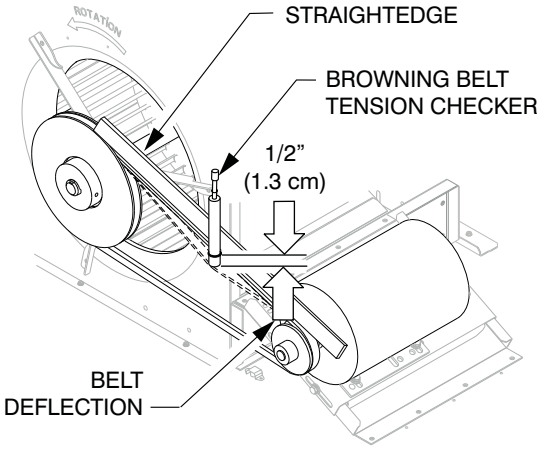

Fig. 5 – Checking Blower Moter Belt Tension

Adjusting the Belt Tension

Use the following steps to adjust the V–belt tension. See Fig. 4.

1. Loosen the four motor mounting nuts that attach the motor to the blower rail.
2. Loosen the two jack bolt locking nuts beneath the motor mounting plate. Turn the jack bolt locking nut counterclockwise to loosen.
3. Turn the jack bolts counterclockwise to loosen and clockwise to tighten.
4. Adjust the V–belt for proper tension.
5. Make sure the fan shaft and motor shaft are parallel before tightening the motor mount nuts. See Fig. 6.
6. Make adjustments as necessary.
7. Tighten the four motor mounting nuts.
8. Check the V–belt tension. Make adjustments as necessary.
9. Re–tighten the four motor mounting nuts.
10. Tighten both jack bolt locking nuts securely.

Replacing the V–belt

1. Use a belt with same section type or similar size. Do not substitute a "FHP" or notched type V–belt.
2. Loosen (turn counterclockwise) the motor mounting plate front bolts and rear bolts. See Fig. 4.

⚠ CAUTION

EQUIPMENT DAMAGE HAZARD

Failure to follow this CAUTION can result in premature wear and damage to equipment.

Do not use a screwdriver or pry–bar to place the new V–belt in the pulley groove. This can cause stress on the V–belt and the pulley, resulting in premature wear on the V–belt and damage to the pulley.

3. Loosen (turn counterclockwise) the jack bolt lock nuts. Loosen (turn counterclockwise) the jack bolts, relieving the belt tension and allowing easy removal of the belt by hand.
4. Remove the belt by gently lifting the old belt over one of the pulleys.
5. Install the new belt by gently sliding the belt over both pulleys, then tighten (turn clockwise) the jack bolts, sliding the motor plate away from the fan housing until proper belt tension is achieved.
6. Check the alignment of the pulleys, adjust if necessary. See Fig. 6.
7. Tighten all bolts attaching the motor to the motor plate.
8. Tighten all jack bolt jam nuts by turning clockwise.
9. Check the tension after a few hours of runtime and re–adjust as required. See Fig. 5.

Adjustable–Pitch Pulley on Motor

The motor pulley is an adjustable–pitch type that allows a servicer to implement changes in the fan wheel speed to match as–installed ductwork systems. The pulley consists of a fixed flange side that faces the motor (secured to the motor shaft) and a movable flange side that can be rotated around the fixed flange side that increases or reduces the pitch diameter of this driver pulley. (See Fig. 6.)

As the pitch diameter is changed by adjusting the position of the movable flange, the centerline on this pulley shifts laterally, along the motor shaft. This creates a requirement for a realignment of the pulleys after any adjustment of the movable flange. Also reset the belt tension after each realignment. The factory settings of the adjustable pulley is five turns open from full closed.

Check the condition of the motor pulley for signs of wear. Glazing of the belt contact surfaces and erosion on these surfaces are signs of improper belt tension and/or belt slippage. Pulley replacement may be necessary.

Changing Fan Speed

1. Shut off the main unit power supply, and use the approved Lockout/Tagout procedures.
2. Loosen the belt by loosening the motor adjustment bolts as described in the Belt Adjustment section above. (See Fig. 5.)
3. Loosen the movable pulley flange setscrew. (See Fig. 6.)
4. Screw the movable flange toward fixed flange to increase speed and away from fixed flange to decrease speed. Increasing fan speed increases load on the motor. Do not exceed maximum speed specified in the Product Data or motor amperage listed on the unit rating plate..
5. Set the movable flange at the nearest keyway or flat of the pulley hub and tighten the setscrew to torque of 72 ± 5 in–lbs (8.14 ± 0.56 Nm).

Aligning the Fan and Motor Pulleys

1. Loosen the fan pulley setscrews.
2. Slide the fan pulley along the fan shaft. Make angular alignment by loosening the motor from its mounting. See Fig. 6.
3. Tighten the fan pulley setscrews and motor mounting bolts to torque specifications.
4. Recheck the belt tension. See Fig. 5.

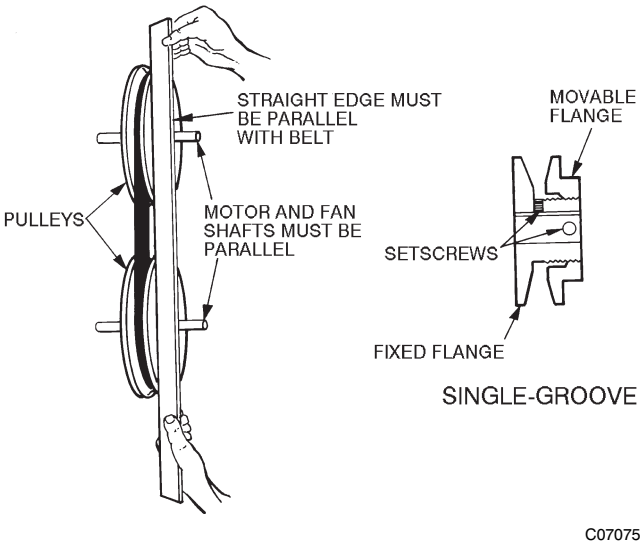

Fig. 6 – Supply–Fan Pulley Adjustment

Bearings

This fan system uses bearings featuring concentric split locking collars. The collars are tightened through a cap screw bridging the split portion of the collar. The cap screw has a Torx T25 socket head. To tighten the locking collar: Hold the locking collar tightly against the inner race of the bearing and torque the cap screw to 65−70 in−lb (7.4−7.9 Nm). See Fig. 7.

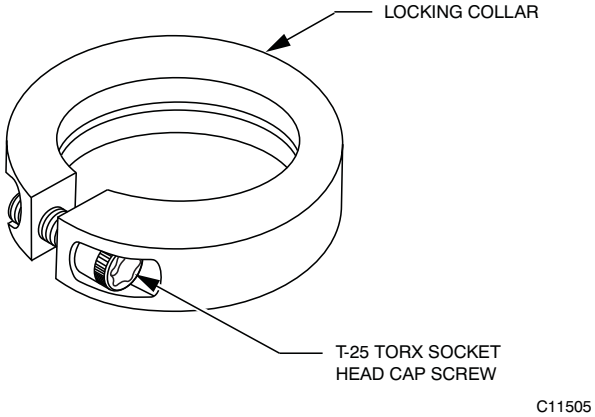

Fig. 7 – Tightening Locking Collar

STAGED AIR VOLUME (SAV) CONTROL: 2−SPEED FAN WITH VARIABLE FREQUENCY DRIVE (VFD)

Staged Air Volume (SAV) Indoor Fan Speed System

NOTE: The SAV option is not available on units with Humidi−MiZer® adaptive humidification system.

The SAV system utilizes a Fan Speed control board and Variable Frequency Drive (VFD) to automatically adjust the indoor fan motor speed in sequence with the unit's ventilation, cooling and heating operation. Conforming to ASHRAE 90.1 2010 Standard Section 6.4.3.10.b, during the first stage of cooling operation the SAV system will adjust the fan motor to provide two- thirds (2/3) of the design airflow rate for the unit. When the call for the second stage of cooling is required, the SAV system will allow the design airflow rate for the unit established (100%). During the heating mode, the SAV system will allow total design airflow rate (100%) operation. During ventilation mode, the SAV system will operate the fan motor at 2/3 speed.

Identifying Factory Option

This supplement only applies to units that meet the criteria detailed in Table 1. If the unit does not meet that criteria, discard this document.

Table 1 — Model−Size / VFD Option Indicator

Model / Sizes	Position in Model Number	VDP FIOP Indicator
48TC 17 – 28	17	G, J

NOTE: See Fig. 10 for an example of typical Model Number Nomenclature. See Appendix I for a complete model number nomenclature display.

Unit Installation with SAV Option

48TC Rooftop—Refer to the base unit installation instructions for standard required operating and service clearances.

NOTE: The Remote VFD Keypad is a field-installed option. It is not included as part of the Factory installed VFD option. See *"Variable Frequency Drive (VFD) Installation, Setup and Troubleshooting Supplement"* for wiring schematics and performance charts and configuration. See Fig. 8 for location of the (VFD) as mounted on the various 48TC models.

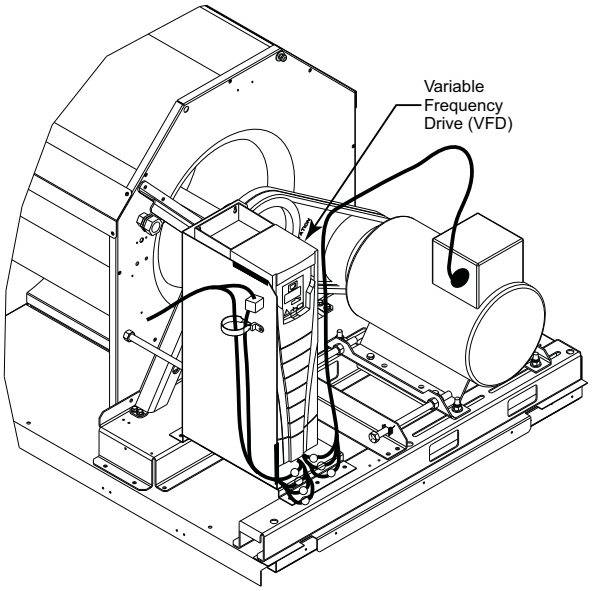

Fig. 8 – VFD Location for 48TC 15–27.5 Units

ADDITIONAL VFD INSTALLATION AND TROUBLESHOOTING

Additional installation, wiring and troubleshooting information for the VFD can be found in the following manuals: *"Variable Frequency Drive (VFD) Installation, Setup and Troubleshooting Supplement."*

Motor

When replacing the motor, use the following steps. See Fig. 9.

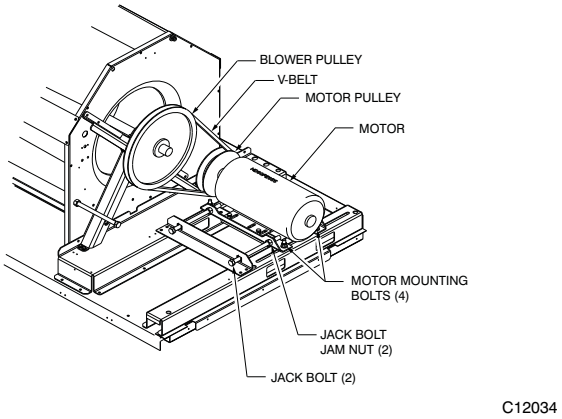

Fig. 9 – Replacing Belt Driven Motor

Enter Unit's Model Number:	THIS UNIT'S MODEL NUMBER																	
Position:	1	2	3	4	5	6	7	8	9	10	11	12	13	14	15	16	17	18
Example:	4	8	H	C	D	D	2	4	A	2	A	6	-	0	A	0	G	0

Product Type

Product Series

Heat Options

Refrig. Systems Options

Cooling Tons

Sensor Options

Indoor Fan Options

Coil Options (RTPF) (Outdoor - Indoor - Hail Guard)

Voltage

Design Revision

Base Unit Controls

Intake / Exhaust Options

Service Options

Electrical Options
A = None
C = Non-Fused Disconnect
D = Thru-The-Base Connections
F = Non-Fused Disconnect and Thru-The-Base Connections
G = Two-Speed Blower
J = Non-Fused Disconnect and Two-Speed Blower
K = Through the basepan electrical and Two-Speed Blower
M = non-Fused Disconnect and Through the basepan electrical and Two-Speed Blower

Factory Assigned

C12090A

Fig. 10 – Model Number Nomenclature Example, 48TC Series

Replacing the Motor

1. Turn off all electrical power to the unit. Use approved lockout/tagout procedures on all electrical power sources.
2. Remove the cover on the motor connection box.
3. Disconnect all electrical leads to the motor.
4. Loosen the two jack bolt jamnuts on the motor mounting bracket.
5. Turn the two jack bolts counterclockwise until the motor assembly moves closer to the blower pulley.
6. Remove the V-belt from the blower pulley and motor pulley.

⚠ CAUTION

EQUIPMENT DAMAGE HAZARD

Failure to follow this CAUTION can result in premature wear and damage to equipment.

Do not use a screwdriver or pry–bar to place the new V–belt in the pulley groove. This can cause stress on the V–belt and the pulley, resulting in premature wear on the V–belt and damage to the pulley.

7. Loosen the four mounting bracket bolts and lock washers.
8. Remove four bolts, four flat washers, four lock washers and four nuts attaching the motor mounting plate to the unit. Discard all lock washers.
9. Remove the motor and motor mounting bracket from the unit.
10. Remove four bolts, flat washers, lock washers and single external-tooth lock washer attaching the motor to the motor mounting plate. Discard all lock washers and external-tooth lock washer.
11. Lift the motor from the motor mounting plate and set aside.
12. Slide the motor mounting band from the old motor.
13. Slide the motor mounting band onto the new motor and set the motor onto the motor mounting plate.
14. Remove the variable pitch pulley from the old motor and attach it to the new motor.
15. Inspect the variable pitch pulley for cracks and wear. Replace the pulley if necessary.
16. Secure the pulley to the motor by tightening the pulley setscrew to the motor shaft.
17. Insert four bolts and flat washers through the mounting holes on the motor and into holes on the motor mounting plate.
18. On one bolt, place a **new** external-tooth lock washer between the motor and motor mounting band.
19. Make sure the teeth of the external-tooth lock washer make contact with the painted base of the motor. **This washer is essential** for properly grounding the motor.
20. Install four new lock washers and four nuts on the bolts on the bottom of the motor mounting plate, but **do not** tighten the mounting bolts at this time.
21. Set the new motor and motor mounting bracket back onto the unit. See Fig. 10.
22. Install four bolts, four flat washers, four new lock washers and four nuts attaching the motor assembly to the unit, but **do not** tighten the mounting bolts at this time.
23. Install the motor drive V-belt to the motor pulley and blowerwheel pulley. See CAUTION.
24. Align the motor pulley and blower wheel pulley using a straight edge. See Fig. 6.

25. Adjust the V-belt tension using the adjustment tool.
26. Turn the two jack bolts clockwise, moving the motor assembly away from the blower pulley, increasing the V-belt tension.
27. Tighten the four bolts securing the motor mounting brackets to the unit. Torque bolts to 120 ± 12 in-lbs (14 ± 1.4 Nm).
28. Remove the cover on the motor connection box.
29. Re-connect all electrical leads to the motor and replace the connection box cover.
30. Re-connect all electrical power to the unit. Remove lockout tags on all electrical power sources.
31. Start the unit and allow to run for a designated period.
32. Shut off the unit and make any necessary adjustments to the V-belt tension or the motor and blower wheel pulley alignment.

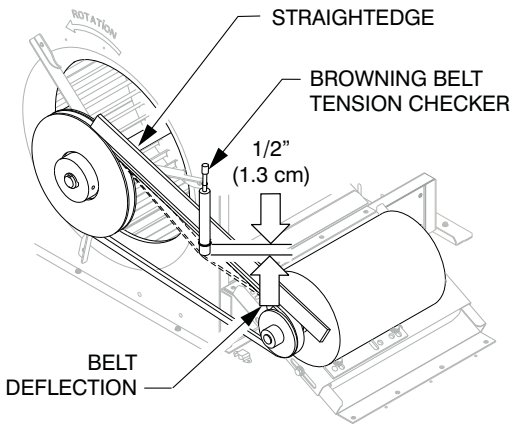

C12093

Fig. 11 – Adjusting V–belt Tension

Changing Fan Wheel Speed by Changing Pulleys

The horsepower rating of the belt is primarily dictated by the pitch diameter of the smaller pulley in the drive system (typically the motor pulley in these units). Do not install a replacement motor pulley with a smaller pitch diameter than provided on the original factory pulley. Change fan wheel speed by changing the fixed fan pulley (larger pitch diameter to reduce wheel speed, smaller pitch diameter to increase wheel speed) or select a new system with both pulleys and matching belt(s).

Before changing pulleys to increase fan wheel speed, check the fan performance at the target speed and airflow rate to determine new motor loading (bhp). Use the fan performance tables or use the Packaged Rooftop Builder software program. Confirm that the motor in this unit is capable of operating at the new operating condition. Fan shaft loading increases dramatically as wheel speed is increased.

⚠ CAUTION

EQUIPMENT DAMAGE HAZARD

Failure to follow this CAUTION can result in equipment damage.

Drive packages cannot be changed in the field. For example: a standard drive cannot be changed to a high static drive. This type of change will alter the unit's certification and could require heavier wiring to support the higher amperage draw of the drive package.

NOTE: Drive packages cannot be changed in the field. For example: a standard drive cannot be changed to a high static drive. This type of change will alter the unit's certification and could require heavier wiring to support the higher amperage draw of the drive package.

To reduce vibration, replace the motor's adjustable pitch pulley with a fixed pitch pulley (after the final airflow balance adjustment). This will reduce the amount of vibration generated by the motor/belt-drive system.

To determine variable pitch pulley diameter, perform the following calculation:

1. Determine full open and full closed pulley diameter.
2. Subtract the full open diameter from the full closed diameter.
3. Divide that number by the number of pulley turns open from full closed
   This number is the change in pitch datum per turn open.

EXAMPLE:
- Pulley dimensions 2.9 to 3.9 (full close to full open)
- 3.9 - 2.9 = 1
- 1 divided by 5 (turns from full close to full open)
- 0.2 change in pulley diameter per turn open
- 2.9 + 0.2 = 3.1" pulley diameter when pulley closed one turn from full open

CONDENSER COIL SERVICE

ROUND TUBE PLATE FIN (RTPF) CONDENSER COIL

The condenser coil is fabricated with round tube copper hairpins and plate fins of various materials and/or coatings (see the Model Number Nomenclature in Appendix I to identify the materials provided in this unit). The coil may be one–row or composite–type two–row. Composite two–row coils are two single–row coils fabricated with a single return bend end tubesheet.

Recommended Condenser Coil Maintenance and Cleaning

Routine cleaning of coil surfaces is essential to maintain proper operation of the unit. Elimination of contamination and removal of harmful residues will greatly increase the life of the coil and extend the life of the unit. The following maintenance and cleaning procedures are

recommended as part of the routine maintenance activities to extend the life of the coil.

Remove Surface Loaded Fibers

Surface loaded fibers or dirt should be removed with a vacuum cleaner. If a vacuum cleaner is not available, a soft non–metallic bristle brush may be used. In either case, the tool should be applied in the direction of the fins. Coil surfaces can be easily damaged (fin edges can be easily bent over and damage to the coating of a protected coil) if the tool is applied across the fins.

NOTE: Use of a water stream, such as a garden hose, against a surface loaded coil will drive the fibers and dirt into the coil. This will make cleaning efforts more difficult. Surface loaded fibers must be completely removed prior to using low–velocity clean water rinse.

Periodic Clean Water Rinse

A periodic clean water rinse is very beneficial for coils that are applied in coastal or industrial environments. However, it is very important that the water rinse is made with a very low–velocity water stream to avoid damaging the fin edges. Monthly cleaning as described below is recommended.

Routine Cleaning of Coil Surfaces

Periodic cleaning with Totaline® environmentally sound coil cleaner is essential to extend the life of coils. This cleaner is available from Carrier Replacement Components Division as p/n: P902- 0301 for one-gallon (3.8L) container, and P902- 0305 for a 5-gallon (18.9L) container. It is recommended that all coils, including standard aluminum, pre–coated, copper/copper or E–coated coils be cleaned with the Totaline® environmentally sound coil cleaner as described below. Coil cleaning should be part of the unit's regularly scheduled maintenance procedures to ensure long life of the coil. Failure to clean the coils may result in reduced durability in the environment.

Avoid use of:

- coil brighteners
- acid cleaning prior to painting
- high pressure washers
- poor quality water for cleaning

Totaline® environmentally sound coil cleaner is a non-flammable, hypo allergenic, non bacterial, USDA accepted biodegradable agent that will not harm the coil or surrounding components such as electrical wiring, painted metal surfaces, or insulation. Use of non–recommended coil cleaners is strongly discouraged since coil and unit durability could be affected.

Two–Row Coils

Clean coil as follows:

1. Turn off unit power and tag the disconnect.
2. Remove the top panel screws on the condenser end of the unit.
3. Remove the condenser coil corner post. See Fig. 12. To hold the top panel open, place the coil corner post between the top panel and center post. See Fig. 13.

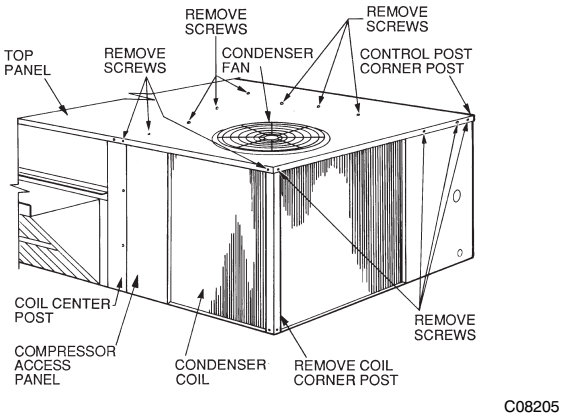

Fig. 12 – Cleaning Condenser Coil

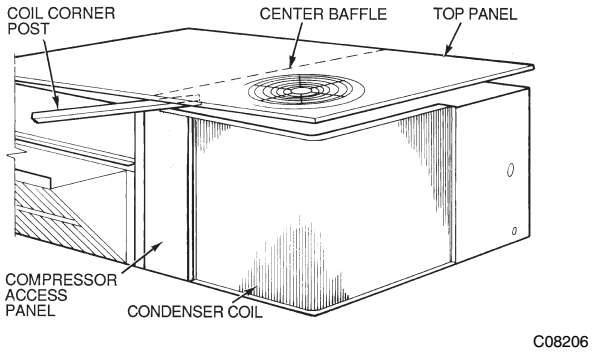

Fig. 13 – Propping Up Top Panel

4. Remove the screws securing the coil to the compressor plate and compressor access panel.
5. Remove the fastener holding the coil sections together at the return end of the condenser coil. Carefully separate the outer coil section 3 to 4 in. from the inner coil section. See Fig. 14.

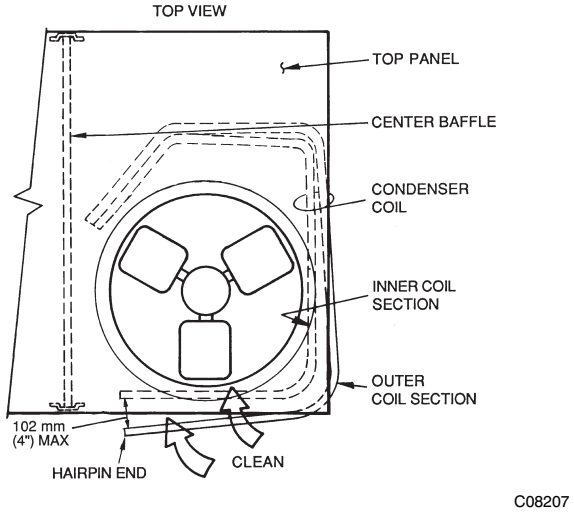

Fig. 14 – Separating Coil Sections

6. Use a water hose or other suitable equipment to flush down between the 2 coil sections to remove dirt and

debris. Clean the outer surfaces with a stiff brush in the normal manner.

7. Secure the inner and outer coil rows together with a field−supplied fastener.
8. Reposition the outer coil section and remove the coil corner post from between the top panel and center post. Install the coil corner post and replace all screws.

EVAPORATOR COILS

The evaporator coil uses the traditional round- tube, plate-fin (RTPF) technology. Tube and fin construction consists of various optional materials and coatings (see APPENDIX I. MODEL NUMBER NOMENCLATURE). Coils are multiple-row. On two-compressor units, the evaporator coil is a face split design, meaning the two refrigerant circuits are independent in the coil. The bottom portion of the coil will always be circuit A, with the top of the coil being circuit B.

Coil Maintenance and Cleaning Recommendation

Routine cleaning of coil surfaces is essential to maintain proper operation of the unit. Elimination of contamination and removal of harmful residues will greatly increase the life of the coil and extend the life of the unit. The following maintenance and cleaning procedures are recommended as part of the routine maintenance activities to extend the life of the coil.

Removing Surface Loaded Fibers

Surface loaded fibers or dirt should be removed with a vacuum cleaner. If a vacuum cleaner is not available, a soft non- metallic bristle brush can be used. In either case, the tool should be applied in the direction of the fins. Coil surfaces can be easily damaged. Applying the tool across the fin edges can cause the edges to be easily bent over, damaging the coating of a protected coil.

NOTE: Use of a water stream, such as a garden hose, against a surface-loaded coil will drive the fibers and dirt into the coil. This will make cleaning efforts more difficult. Surface-loaded fibers must be completely removed prior to using a low-velocity clean water rinse. A vacuum cleaner or a soft- bristled brush should be used to remove surface-loaded fibers and dirt.

Periodic Clean Water Rinse

A periodic clean-water rinse is very beneficial for coils that are used in coastal or industrial environments. However, it is very important that the water rinse is made with a very low-velocity water stream to avoid damage to the fin edges. Monthly cleaning, as described below, is recommended.

Routine Cleaning of Evaporator Coil Surfaces

Monthly cleaning with Totaline® environmentally sound coil cleaner is essential to extend the life of the coils. This cleaner is available from Carrier Replacement Parts Division (p/n: P902- 0301 for one-gallon (3.8L) container, and p/n: P902- 0305 for a 5-gallon (18.9L) container). It is recommended that all round tube coils be cleaned as described below. Coil cleaning should be part of the unit's regularly scheduled maintenance procedures to ensure a long life for the coil. Failure to clean the coils can result in reduced durability in the environment. When cleaning the coils, avoid use of the following:

- coil brighteners
- acid cleaning prior to painting
- high pressure washers
- poor quality water for cleaning

Totaline® environmentally sound coil cleaner is a non-flammable, hypo allergenic, non bacterial, USDA accepted biodegradable agent that will not harm the coil or surrounding components such as electrical wiring, painted metal surfaces, or insulation. Use of non−recommended coil cleaners is strongly discouraged since coil and unit durability could be affected.

Totaline Environmentally Sound Coil Cleaner Application Equipment

- 2−1/2 gallon garden sprayer
- Water rinse with low velocity spray nozzle

CAUTION

EQUIPMENT HAZARD

Failure to follow this CAUTION can result in corrosion and damage to the unit.

Harsh chemicals, household bleach or acid or basic cleaners should not be used to clean outdoor or indoor coils of any kind. These cleaners can be very difficult to rinse out of the coil and can accelerate corrosion at the fin/tube interface where dissimilar materials are in contact. If there is dirt below the surface of the coil, use the Totaline® environmentally sound coil cleaner.

⚠ WARNING

PERSONAL INJURY HAZARD

Failure to follow this WARNING can result in severe personal injury and reduced unit performance.

High−velocity water from a pressure washer, garden hose, or compressed air should never be used to clean a coil. The force of the water or air jet will bend the fin edges and increase airside pressure drop.

High−velocity water from a pressure washer can cause severe injury upon contact with exposed body tissue. Always direct the water stream away from the body.

Totaline Environmentally Sound Coil Cleaner Application Instructions

1. Proper protection such as safety glasses, gloves and protective clothing are recommended during mixing and application.
2. Remove all surface loaded fibers and dirt with a vacuum cleaner as described above.

3. Thoroughly wet finned surfaces with clean water and a low velocity garden hose, being careful not to bend fins.
4. Mix Totaline® environmentally sound coil cleaner in a 2–1/2 gallon (9.6 L) garden sprayer according to the instructions included with the cleaner. The optimum solution temperature is 100°F (38°C).

NOTE: Do NOT USE water in excess of 130°F (54°C), as the enzymatic activity will be destroyed.

5. Thoroughly apply Totaline® environmentally sound coil cleaner solution to all coil surfaces, including finned area, tube sheets and coil headers.
6. Hold the garden sprayer nozzle close to finned areas and apply cleaner with a vertical, up–and–down motion.
7. Avoid spraying in a horizontal pattern to minimize potential for fin damage.
8. Make sure the cleaner thoroughly penetrates deep into the finned areas.
9. Interior and exterior finned areas must be thoroughly cleaned.
10. Finned surfaces should remain wet with cleaning solution for 10 minutes.
11. Make sure surfaces are not allowed to dry before rinsing. Reapply cleaner as needed to ensure 10–minute saturation is achieved.
12. Thoroughly rinse all surfaces with low–velocity clean water using a downward rinsing motion of the spray nozzle. Protect fins from damage from the spray nozzle.

Evaporator Coil Metering Devices

The metering devices are multiple fixed–bore devices (Acutrol™) swedged into the horizontal outlet tubes from the liquid header, located at the entrance to each evaporator coil circuit path. These are non–adjustable. Service requires replacing the entire liquid header assembly.

To check for possible blockage of one or more of these metering devices, disconnect the supply fan contactor (IFC) coil, then start the compressor and observe the frosting pattern on the face of the evaporator coil. A frost pattern should develop uniformly across the face of the coil starting at each horizontal header tube. Failure to develop frost at an outlet tube can indicate a plugged or a missing orifice.

Refrigerant System Pressure Access Ports

There are two access ports in the system – on the suction tube near the compressor and on the discharge tube near the compressor. These are brass fittings with black plastic caps. The hose connection fittings are standard 1/4 SAE male flare couplings.

The brass fittings are two–piece High Flow valves, with a receptacle base brazed to the tubing and an integral spring–closed check valve core screwed into the base (See Fig. 15). This schrader valve is permanently assembled into this core body and cannot be serviced separately; replace the entire core body if necessary. Service tools are available from RCD (p/n P920–0010) that allow the replacement of the schrader valve core without having to recover the entire system refrigerant charge. Apply compressor refrigerant oil to the schrader valve core's bottom o–ring. Install the fitting body with 96 ± 10 in–lbs (10.85 ± 1.13 Nm) of torque; do not overtighten.

NOTE: The High–Flow valve has a black plastic cap with a rubber o–ring located inside the cap. This rubber o–ring must be in place in the cap to prevent refrigerant leaks.

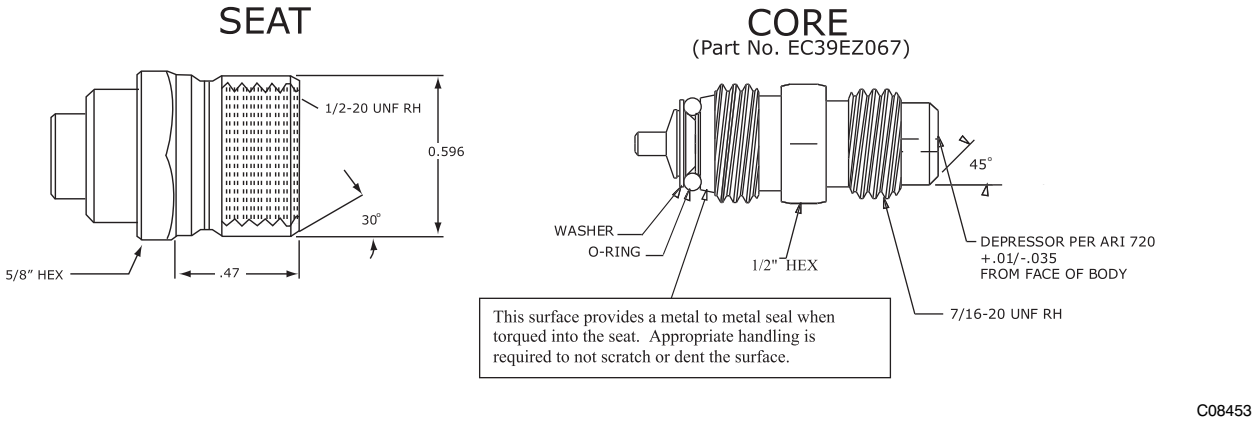

Fig. 15 – CoreMax Access Port Assembly

HUMIDI–MIZER® ADAPTIVE DEHUMIDIFICATION SYSTEM

Units with the factory–equipped Humidi–MiZer® option are capable of providing multiple modes of improved dehumidification as a variation of the normal cooling cycle. The design of the Humidi–MiZer® system allows for two humidity control modes of operation of the rooftop unit, utilizing a common subcooling/reheat dehumidification coil located downstream of the standard evaporator coil. This allows the rooftop unit to operate in both a dehumidification (Subcooling) mode and a hot gas Reheat Mode for maximum system flexibility. The Humidi–MiZer® package is factory–installed and will operate whenever there is a dehumidification requirement present.

The Humidi−MiZer® system is initiated based on an input from a discrete input from a mechanical space or return air humidistat.

Humidi−MiZer® Modes

Dehumidification Mode (Subcooling)

This mode will be engaged to satisfy part−−load type conditions when there is a space call for cooling and dehumidification. Although the temperature could have dropped, decreasing levels of the sensible load in the space, the outdoor and/or space humidity levels can be higher. A typical scenario could be when the outside air is 85°F (29°C) with 70% to 80% relative humidity (RH).

Desired sensible heat ratio (SHR) for equipment in this scenario is typically from 0.4 to 0.7. The Humidi−MiZer® unit will initiate Dehumidification mode when the space temperature and humidity are both above the temperature and humidity setpoints and will attempt to meet both setpoint requirements.

Once the humidity requirement is met, the unit can continue to operate in normal cooling mode to meet any remaining sensible capacity load. Alternatively, if the sensible load is met and humidity levels remain high the unit can switch to Hot Gas Reheat mode to provide neutral, dehumidified air.

Reheat Mode

This mode is used when dehumidification is required without a need for cooling, such as when the outside air is at a neutral temperature, but high humidity exists. This situation requires the equipment to operate at a low SHR of 0.0 to 0.2. With no cooling requirement calling for dehumidification, the Humidi−MiZer® adaptive dehumidification system will turn on both compressors and open the two hot gas bypass valves allowing refrigerant flow to the Humidi−MiZer® coil to reheat the unit's supply air to a neutral temperature.

As the hot bypassed refrigerant liquid (gas or two−phase mixture) passes through the Humidi−MiZer® coil, it is exposed to the to the cold supply airflow coming from the evaporator coil. The refrigerant is subcooled in this coil to a temperature approaching the evaporator leaving air temperature. The liquid refrigerant then enters a Thermostatic Expansion Valve (TXV), decreasing the air pressure.

The refrigerant enters the TXV and evaporator coil at a temperature lower than the temperature in the standard cooling operation. This lower temperature increases the latent capacity of the evaporator. The refrigerant passes through the evaporator turning it into a superheated vapor. The air passing over the evaporator coil becomes colder than it would during normal operation. As this same air passes over the Humidi−MiZer® Reheat Coil, it will be warmed to the neutral supply air temperature.

Humidi−MiZer® System Components

The Humidi−MiZer® uses the standard unit compressor(s), evaporator coil and Round Tube−Plate Fin (RTPF) condenser coil. Additional refrigeration system hardware includes a subcooler/reheat coil and solenoid valves. On 50HC models, the evaporator coil includes a TXV as a standard feature. Units with Humidi−MiZer® FIOP also include a factory−installed head pressure control system (Motormaster I) to provide proper liquid pressure during reheat modes. Unique controls include a Reheat Relay Board (RHB), evaporator coil freezestat, secondary low pressure switch and a low outdoor temperature lockout switch (LTLO). Units with two refrigeration circuits include a solenoid valve, TXV, freezestat and low−pressure switch for each circuit. See Fig. 16.

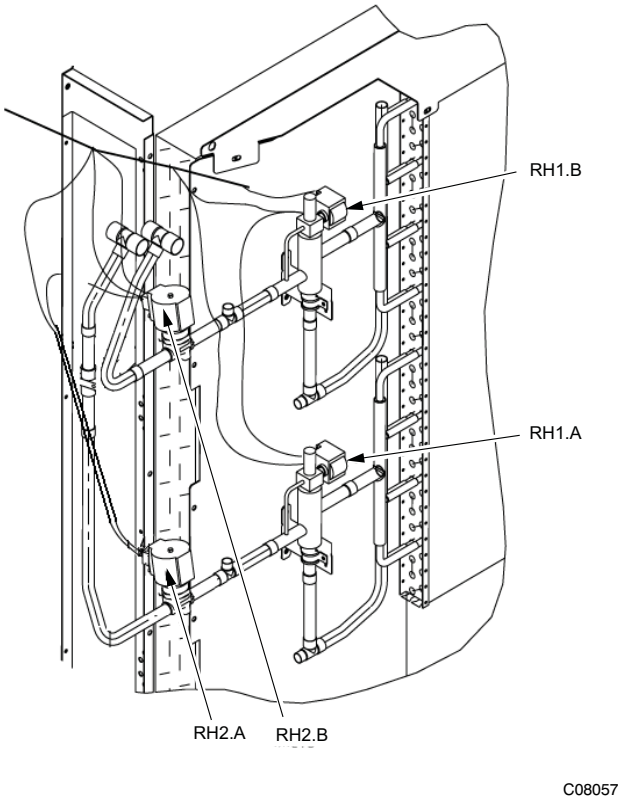

Fig. 16 – Humidi−MiZer® Valve Locations

Subcooler/Reheat Coil

The Subcooler/Reheat Coil is mounted across the leaving face of the unit's evaporator coil. The coil is a one−row design with two separate circuits.

- **3−Way Solenoid Valve**
- **Hot Gas Bypass Solenoid Valve**
- **Relay Reheat Board (RHB)**
- **Evaporator Freeze Protection Thermostat**
- **Low Outdoor Temperature Lockout Switch**
- **Secondary Low Pressure Switch**
- **Head Pressure Control**

Operating Sequences

The Humidi−−MiZer® system provides three sub−modes of operation: Normal Cooling (see Fig. 17), Subcooling Reheat1 (see Fig. 18) and Hot Gas Reheat2 (see Fig. 19).

The Reheat1 and Reheat2 modes are available when the unit is not in a heating mode and when the Low Ambient Lockout Switch is closed.

When there is only a single cooling demand (thermostat Y1 alone or with thermostat Y2), one or both circuits will operate in Reheat2 mode. Both solenoids are energized in both circuits. See Fig. 18, Hot Gas Reheat Schematic for system refrigerant flow.

When there is both cooling demand (thermostat Y1 demand) and dehumidification demand, circuit 1 will operate in Reheat1 mode (Subcooling, Fig. 17) and circuit will operated in Reheat2 mode (Reheat, Fig. 18). In Reheat1 mode, the 3−−way solenoid valve is energized, opening the reheat coil to the refrigeration flow path providing sub−−cooling to the liquid before it enters the TXV.

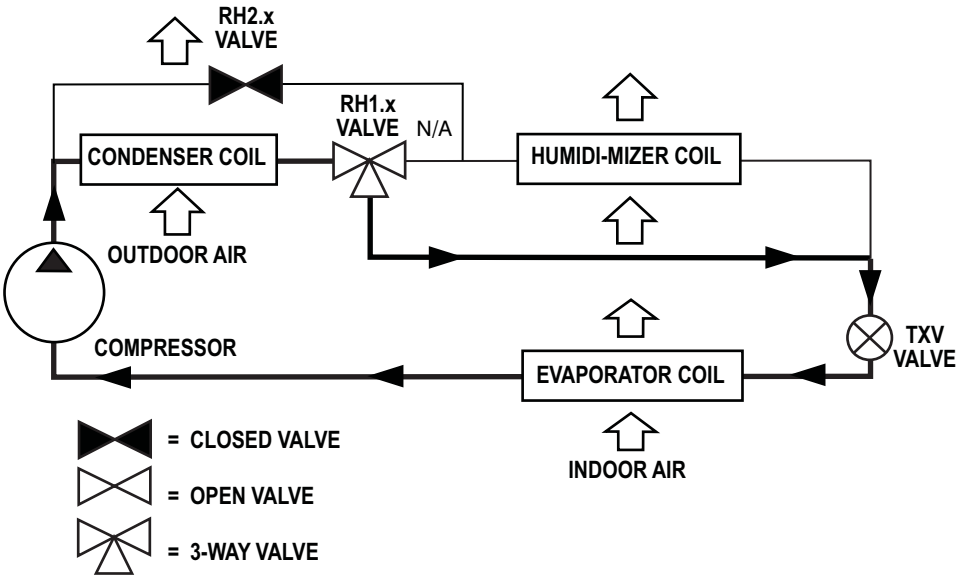

Fig. 17 – Normal Cooling Mode – Humidi–MiZer® System

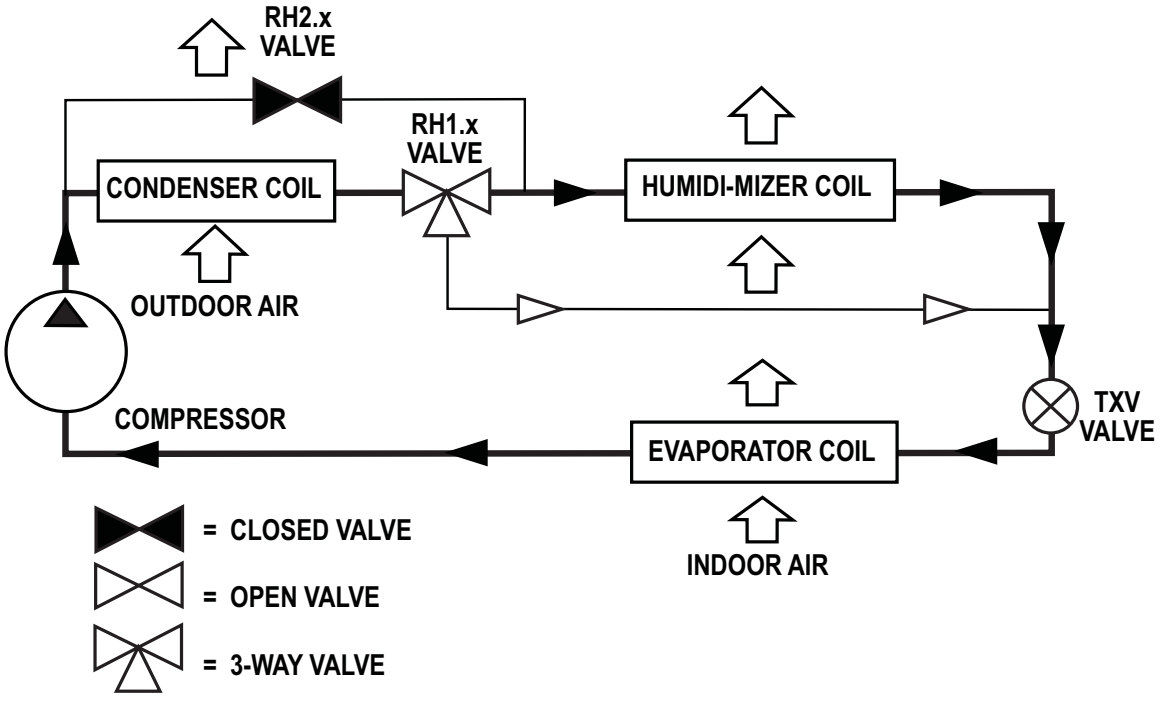

Fig. 18 – Subcooling Mode (Reheat 1) – Humidi–MiZer® System

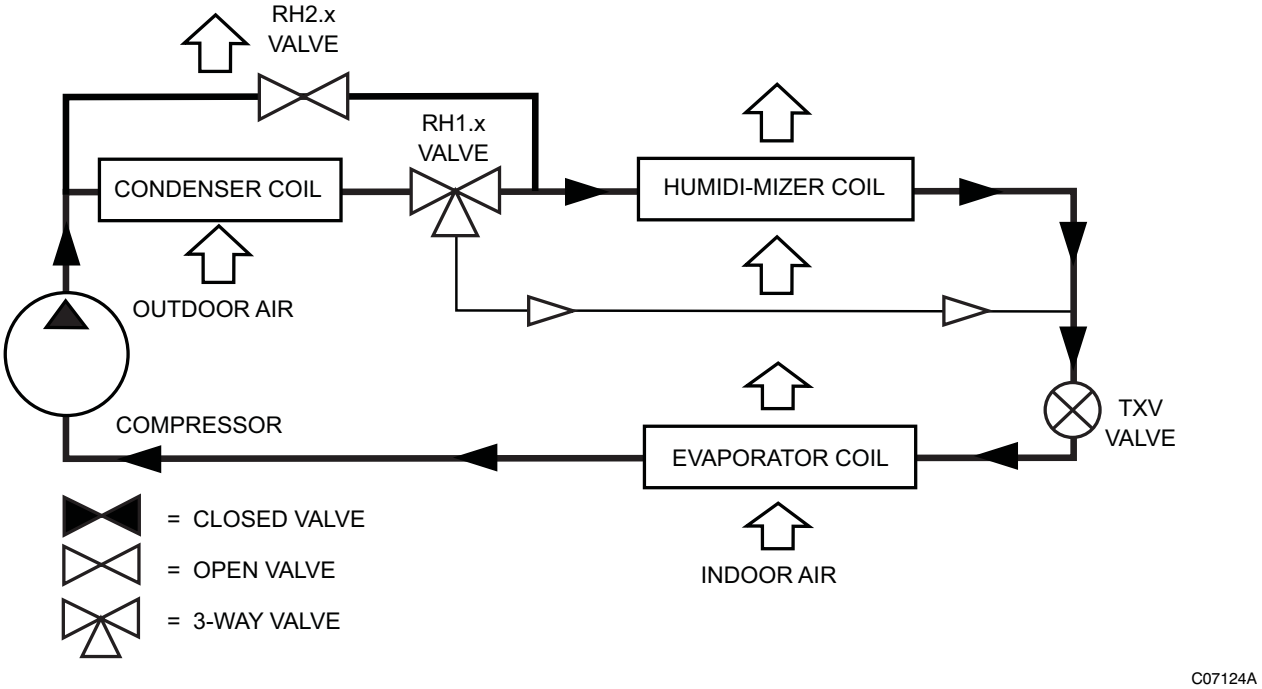

Fig. 19 – Hot Gas Reheat Mode (Reheat 2) – Humidi–MiZer® System

Table 1 – Humidi–MiZer® Reheat Control Board I/O

Point Name	Type	Connection Pin Number	Unit Connection	Note
Humidistat/LTLO	DI, 24VAC	J1A – 1 (1)	LTLO	
Thermostat W1	DI, 24VAC	J1A – 2 (2)	CTB – REHEAT – 4	
Econ Y1	DI, 24VAC	J1A – 6 (6)	CTB – REHEAT – 5	
Thermostat G	DI, 24VAC	J1B – 1 (7)	CTB – REHEAT – 1	
24V Power (J1)	24VAC	J1B – 3 (9)	CTB – R	
24V Power (J2)	24 VAC	J2 – 1	CTB – R	
Econ Y2	DI, 24VAC	J1B – 5 (11)	CTB – REHEAT – 7	2 – circ only
COMP1	DO, 24VAC	J1A – 5 (5)	CTB – HEAT – 6	
IFM	DO, 24VAC	J1B – 4 (8)	CTB – REHEAT – 2	
COMP2	DO, 24VAC	J1B – 4 (10)	CTB – REHEAT – 8	
LSV	DO, 24VAC	J2 – 2	FTP (BLK)	
DSV1	DO, 24VAC	J2 – 3	DSV	
NOT LSV	DO, 24VAC	J2 – 4		2 – circ only
DSV2	DO, 24VAC	J2 – 5		2 – circ only

LEGEND
COMP — Compressor
CTB — Control Terminal Board
DI — Discrete Input (switch)
DO — Discrete Output (switch)
DSV — Discharge (gas) Solenoid Valve
ECON — Economizer
FPT — Freeze Protection Thermostat
IFM — Indoor (supply) Fan Motor
LSV — Liquid Solenoid Valve
LTLO — Low Temperature Lockout
REHEAT — Connection Strip REHEAT (on CTB)

Table 2 – Inputs/Modes/Outputs Summary

Y1	Y2	W1	G	HUM / LT-LO	MODE		COMP 1	COMP 2	IFM	LSV 1	LSV2	LSV NOT	DSV1	DSV2
OFF	OFF	OFF	ON	OFF	Normal	Fan	OFF	OFF	ON=G	OFF	OFF	ON=R	OFF	OFF
ON	OFF	OFF	On	OFF	Normal	Cool1	ON=Y 1	OFF	ON=G	OFF	OFF	ON=R	OFF	OFF
ON	ON	OFF	ON	OFF	Normal	Cool2	0N=Y2	ON	ON=G	OFF	OFF	ON=R	OFF	OFF
OFF	OFF	ON	X	OFF	Normal	Heat 1	OFF	OFF	ON=G	OFF	OFF	ON=R	OFF	OFF
OFF	OFF	OFF	ON	ON	Reheat	Dehumidify	ON	ON	ON=G	ON	ON	OFF	ON=R	ON=R
ON	OFF	OFF	ON	ON	Subcool Cir1/ Reheat Cir2	Cool1 and Cool2 / Subcool–Dehumidify	ON	ON	ON=G	ON	ON	OFF	OFF	ON=R
ON	ON	OFF	ON	ON	Subcool Cir1 and Cir2	Cool1 and Cool2 / Subcool–Dehumidify	ON	ON	ON=G	ON	ON	OFF	OFF	OFF
OFF	OFF	ON	X	ON	Heat Over–ride	Heat 1	OFF	OFF	ON=G	OFF	OFF	ON=R	OFF	OFF
OFF	OFF	ON + W2	X	ON	Heat Over–ride	Heat 1 and 2	OFF	OFF	ON=G	OFF	OFF	ON=R	OFF	OFF

Table 3 – Humidi–MiZer® Troubleshooting

PROBLEM	CAUSE	REMEDY
Subcooling Reheat Mode Will Not Activate	General cooling mode problem	See Cooling Service Troubleshooting (Table 4).
	No dehumidification demand	See No Dehumidification Demand, below.
	CRC relay operation	See CRC Relay Operation, below.
	Circuit RLV, CLV or LDV valve problem	See CLV, RLV or LDV Valve Operation, below.
Hot Gas Reheat Mode Will Not Activate	General cooling mode problem	See Cooling Service Troubleshooting (Table 4).
	No dehumidification demand	See No Dehumidification Demand, below.
	CRC relay operation	See CRC Relay Operation, below.
	Circuit RLV, CLV or LDV valve problem	See CLV, RLV or LDV Valve Operation, below.
	Circuit RDV valve is not open	See RDV Valve Operation, below.
	Outdoor temperature too low	Check Reheat 2 Circuit Limit Temperatures (Configuration → HMZR → RA.LO and RB.LO) using *Comfort*Link Scrolling Marquee.
No Dehumidification Demand	Relative humidity setpoint too low — Humidistat	Check/reduce setting on accessory humidistat.
	Relative humidity setpoint too low — RH sensor	Check Space RH Setpoints (Setpoints → RH.SP and RH.UN) and occupancy using ComfortLink Scrolling Marquee.
	Software configuration error for accessory humidistat	Check Space Humidity Switch (Configuration UNIT RH.SW) using ComfortLink Scrolling Marquee.
	Software configuration error for accessory humidity sensor	Check RH Sensor on OAQ Input (Configuration → UNIT → RH.S) using ComfortLink Scrolling Marquee.
	No humidity signal	Check wiring. Check humidistat or humidity sensor.
CRC Relay Operation	No 24V signal to input terminals	Check using Cool→Reheat1 Valve Test (Service Test → HMZR → CRC) using ComfortLink Scrolling Marquee.
		Check MBB relay output.
		Check wiring.
		Check transformer and circuit breaker.
	No power to output terminals	Check wiring.
	Relay outputs do not change state	Replace faulty relay.
RLV, CLV or LDV Valve Operation	No 24V signal to input terminals	Check using Cool→Reheat1 Valve Test (Service Test → HMZR → CRC) using ComfortLink Scrolling Marquee.
		Check CRC Relay Operation.
		Check Wiring.
		Check transformer and circuit beaker or fuses.
	Solenoid coil burnout	Check continuous over−voltage is less than 10%.
		Check under−voltage is less than 15%.
		Check for missing coil assembly parts.
		Check for damaged valve enclosing tube.
	Stuck valve	Replace valve. Replace filter drier.
RDV Valve Operation (NOTE: Normally Closed When De−energized)	No 24V signal to input terminals	Check using Cool→Reheat1 Valve Test (Service Test → HMZR → RHV.A or RHV.B) using ComfortLink Scrolling Marquee.
		Check MBB relay output.
		Check wiring.
		Check transformer and circuit breaker or fuses.
	Solenoid coil burnout	Check continuous over−voltage is less than 10%.
		Check under−voltage is less than 15%.
		Check for missing coil assembly parts.
		Check for damaged valve enclosing tube.
	Stuck valve	Replace valve. Replace filter drier.
Low Latent Capacity in Subcooling or Hot Gas Reheat Modes	CLV valve open or leaking	See CLV Valve Operation, above.
Low Sensible Capacity in Normal Cool or Subcooling Reheat Modes	RDV valve open or leaking	See RDV Valve Operation, above.
Low Suction Pressure and High Superheat During Normal Cool Mode	General cooling mode problem	See Cooling Service Troubleshooting (Table 4).
	RDV valve open or leaking	See RDV Valve Operation, above.
Low Suction Pressure and High Discharge Pressure	General cooling mode problem	See Cooling Service Troubleshooting (Table 4).
	Both RLV and CLV valves closed	See RLV and CLV Valve Operation, above.
RDV Valve Cycling On/Off	Hot Gas Reheat mode low suction pressure limit	Normal Operation During Mixed Circuit Subcooling and Hot Gas Reheat Modes at Lower Outdoor Temperatures.
Circuit B Will Not Operate With Circuit A Off	Normal operation. Motormaster outdoor fan control requires operation of circuit A.	None

LEGEND

CRC — Cooling/Reheat Control
CLV — Cooling Liquid Valve
RLV — Reheat Liquid Valve
RH — Relative Humidity
RDV — Reheat Discharge Valve

THERMOSTATIC EXPANSION VALVE (TXV)

All 48TC's have a factory installed nonadjustable thermostatic expansion valve (TXV). The TXV will be a bi-flow, bleed port expansion valve with an external equalizer. TXVs are specifically designed to operate with Puron® or R-22 refrigerant, use only factory authorized TXVs. See Fig. 20.

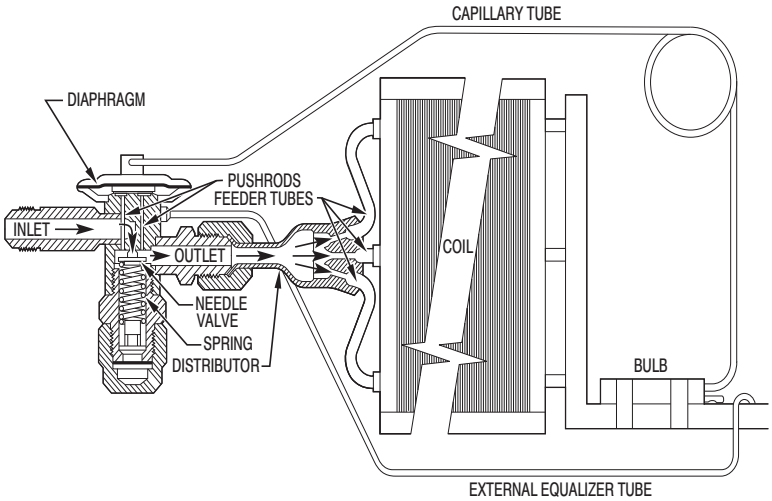

Fig. 20 – Thermostatic Expansion Valve (TXV) Operation

TXV Operation

The TXV is a metering device that is used in air conditioning and heat pump systems to adjust to changing load conditions by maintaining a preset superheat temperature at the outlet of the evaporator coil.

The volume of refrigerant metered through the valve seat is dependent upon the following:

1. Superheat temperature is sensed by the cap tube sensing bulb on suction the tube at the outlet of evaporator coil. This temperature is converted into pressure by refrigerant in the bulb pushing downward on the diaphragm which opens the valve using the push rods.
2. The suction pressure at the outlet of the evaporator coil is transferred through the external equalizer tube to the underside of the diaphragm.
3. The needle valve on the pin carrier is spring loaded, exerting pressure on the underside of the diaphragm. Therefore, the bulb pressure equals the evaporator pressure (at the outlet of the coil) plus the spring pressure. If the evaporator load increases, the temperature increases at the bulb, which increases the pressure on the topside of the diaphragm, pushing the carrier away from the seat, opening the valve and increasing the flow of refrigerant. The increased refrigerant flow causes increased leaving evaporator pressure which is transferred through the equalizer tube to the underside of the diaphragm. This causes the pin carrier spring pressure to close the TXV valve. The refrigerant flow is effectively stabilized to the load demand with a negligible change in superheat.

Replacing TXV

CAUTION

PERSONAL INJURY HAZARD

Failure to follow this CAUTION can result in injury to personnel and damage to components.

Always wear approved safety glasses, work gloves, and other recommended Personal Protective Equipment (PPE) when working with refrigerants.

1. Disconnect all AC power to the unit. Use approved lockout/tagout procedures.
2. Using the gauge set approved for use with Puron (R–410A) refrigerant, recover all refrigerant from the system.
3. Remove the TXV support clamp.
4. Disconnect the liquid line at the TXV inlet.
5. Remove the liquid line connection at the TXV inlet.
6. Remove the equalizer tube from the suction line of the coil. Use a tubing cutter to cut the brazed equalizer line approximately 2 inches (50 mm) above the suction tube.
7. Remove the bulb from the vapor tube above the evaporator coil header outlet.
8. Install the new TXV; avoid damage to the tubing or the valve when attaching the TXV to the distributor. Protect the TXV against over–temperature conditions by using wet rags and directing the torch flame tip away from the TXV body. Connect the liquid line to the TXV inlet by repeating the above process.
9. Attach the equalizer tube to the suction line. If the replacement TXV has a flare nut on its equalizer line, use a tubing cutter to remove the mechanical flare nut from the equalizer. Then use a coupling to braze the

equalizer line to the stub (previous equalizer line) in the suction line.

10. Attach the TXV bulb in the same location as the original (in the sensing bulb indent), wrap the bulb in protective insulation and secure using the supplied bulb clamp. See Figs. 21 and 22.

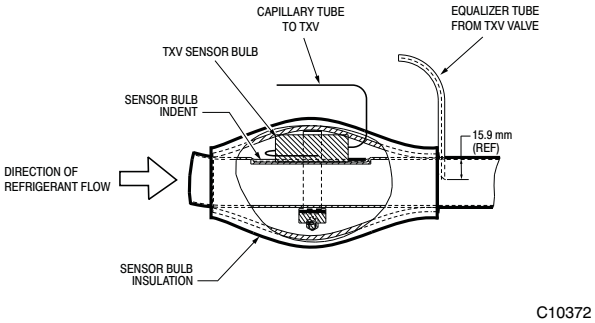

Fig. 21 – TVX Sensor Valve Insulation

11. Route the equalizer tube through the suction connection opening (large hole) in the fitting panel and install the fitting panel in place.
12. Sweat the inlet of the TXV marked "IN" to the liquid line. Avoid excessive heat which could damage the valve.
13. Check for leaks.
14. Evacuate the system completely and then recharge.
15. Remove the lockout/tagout on the main power switch and restore power to the unit.
16. Complete the charging procedure.

Refrigerant System Pressure Access Ports

There are two access ports in the system: on the suction tube near the compressor, and on the discharge tube near the compressor. These are brass fittings with black plastic caps. The hose connection fittings are standard 1/4 SAE male flare couplings. See Fig. 15.

The brass fittings are two-piece High Flow valves, with a receptacle base brazed to the tubing and an integral spring-closed check valve core screwed into the base. See Fig. 15. This check valve is permanently assembled into this core body and cannot be serviced separately; replace the entire core body if necessary. Service tools are available from RCD that allow the replacement of the check valve core without having to recover the entire system refrigerant charge. Apply compressor refrigerant oil to the check valve core's bottom o-ring. Install the fitting body with 96 ±10 in-lbs of torque; do not overtighten.

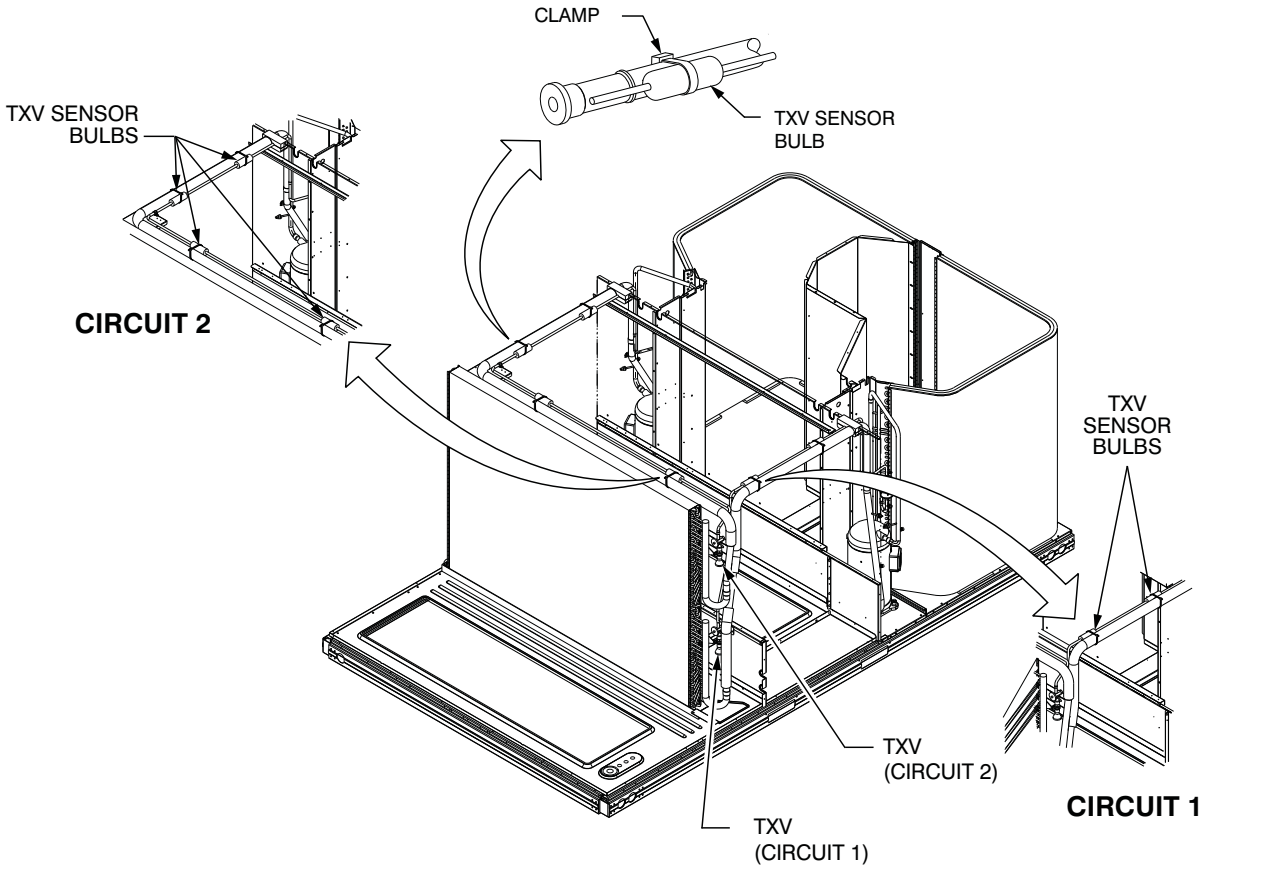

Fig. 22 – TVX Sensor Bulb Locations

PURON® (R−410A) REFRIGERANT

This unit is designed for use with Puron® (R−410A) refrigerant. Do not use any other refrigerant in this system.

CAUTION

UNIT DAMAGE HAZARD

Failure to follow this CAUTION can result in damage to components.

The compressor is in a Puron® (R−410A) refrigerant system and uses a polyester (POE) oil. This oil is extremely hygroscopic, meaning it absorbs water readily. POE oils can absorb 15 times as much water as other oils designed for HCFC and CFC refrigerants. Avoid exposure of POE oil to the atmosphere. Exposure to the atmosphere can cause contaminants that are harmful to R−410A components to form. Keep POE oil containers closed until ready for use.

Puron® (R−410A) refrigerant is provided in pink (rose) colored cylinders. These cylinders are available with and without dip tubes; cylinders with dip tubes will have a label indicating this feature. For a cylinder with a dip tube, place the cylinder in the upright position (access valve at the top) when removing liquid refrigerant for charging. For a cylinder without a dip tube, invert the cylinder, with theaccess valve located on the bottom, when adding liquid refrigerant.

Because Puron® (R−410A) refrigerant is a blend, it is strongly recommended that refrigerant always be removed from the cylinder as a liquid. Admit liquid refrigerant into the system in the discharge line when breaking the refrigerant system vacuum while the compresor is OFF. Only add refrigerant (liquid) into the suction line while the compressor is operating. If adding refrigerant into the suction line, use a commercial metering/expansion device at the gauge manifold; remove liquid from the cylinder, pass it through the metering device at the gauge set, and then pass it into the suction line as a vapor. Do not remove Puron® (R−410A) refrigerant from the cylinder as a vapor.

Refrigerant Charge

Unit panels must be in place when the unit is operating during the charging procedure. To prepare the unit for charge adjustment:

No Charge

Use standard evacuating techniques. Evacuate the system down to 500 microns and let set for 10 minutes to determine if the system has a refrigerant leak. If the evacuation level raises to 1100 microns and stabilizes, then the system has moisture in it and should be dehydrated as GTAC2-5 recommends.

If the system continues to rise above 1100 microns, then the system has a leak and should be pressurized and leak tested using appropriate techniques as explained in GTAC2-5. After evacuating the system, weigh in the specified amount of refrigerant as listed on the unit's rating plate.

Low−Charge Cooling

Using the Cooling Charging Charts (Figs. 23 thru 30), vary the refrigerant until the conditions of the appropriate chart are met. Note the charging charts are different from the type normally used. These charts are based on charging the units to the correct superheat for the various operating conditions. Accurate pressure gauge and temperature sensing devices are required. Connect the pressure gauge to the service port on the suction line. Mount the temperature sensing device on the suction line and insulate it so the outdoor ambient temperature does not affect the reading. Indoor-air cfm must be within the normal operating range of the unit.

SIZE DESIGNATION	NOMINAL TON REFERENCE
17	15
20	17.5
24	20
28	25

EXAMPLE:

Model 48TC*D28

Circuit A

Outdoor Temperature . . . . . 85°F (29°C)

Suction Pressure . . . . . 125 psig (860 kPa)

Suction Temperature should be . . . . . 63°F (17°C)

Circuit B

Outdoor Temperature . . . . . 85°F (29°C)

Suction Pressure . . . . . 120 psig (830 kPa)

Suction Temperature should be . . . . . 58°F (14°C)

Using the Cooling Charging Charts

Take the outdoor ambient temperature and read the suction pressure gauge. Refer to the chart to determine what the suction temperature should be. If the suction temperature is high, add refrigerant.

If the suction temperature is low, carefully recover some of the charge. Recheck the suction pressure as the charge is adjusted.

Select the appropriate unit charging chart from Figs. 23 thru 30.

Note the outdoor ambient temperature and read the suction pressure gauge. Refer to the chart to determine what the suction temperature should be. If the suction temperature is high, add refrigerant. If the suction temperature is low, carefully recover some of the charge. Recheck the suction pressure as the charge is adjusted.

For 17–28 sizes, perform this procedure once for Circuit A (using the Circuit A chart) and once for Circuit B (using the Circuit B chart).

COOLING CHARGING CHARTS

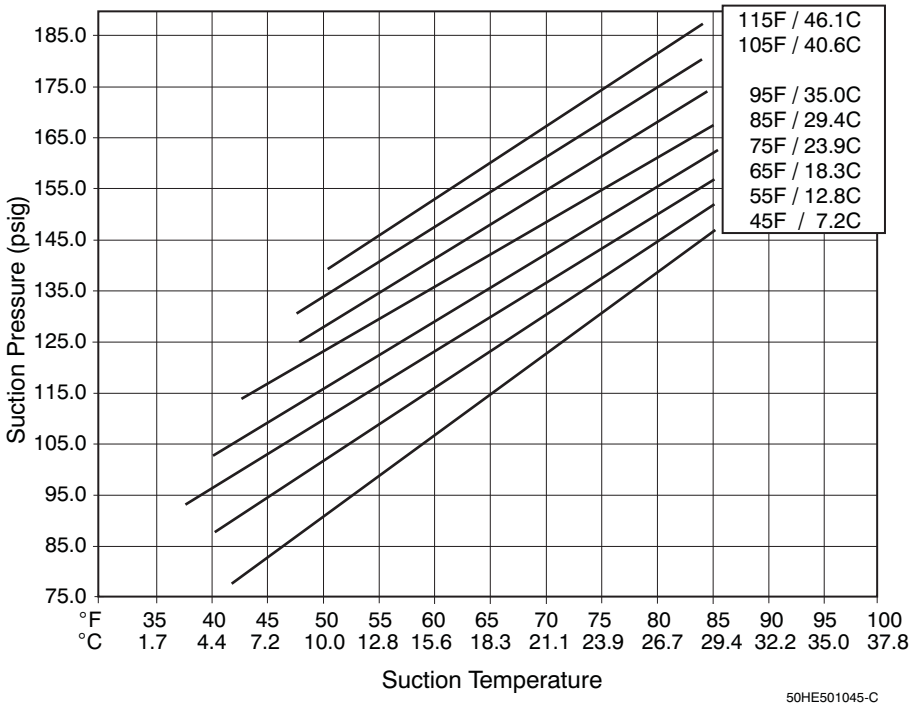

C12227

Fig. 23 – Cooling Charging Chart – 15 Ton (Circuit A)

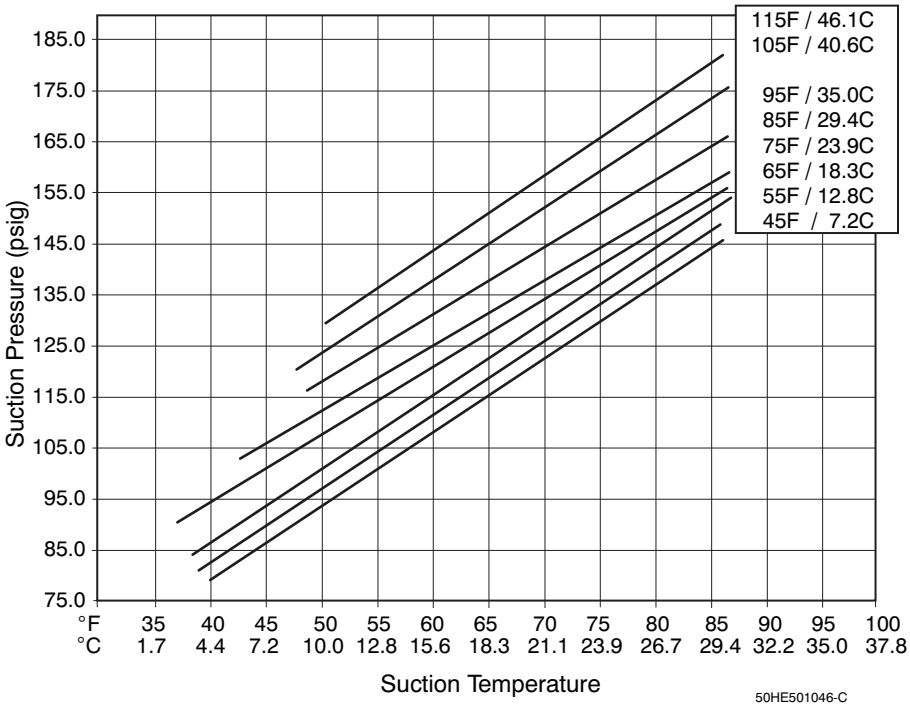

12228

Fig. 24 – Cooling Charging Chart – 15 Ton (Circuit B)

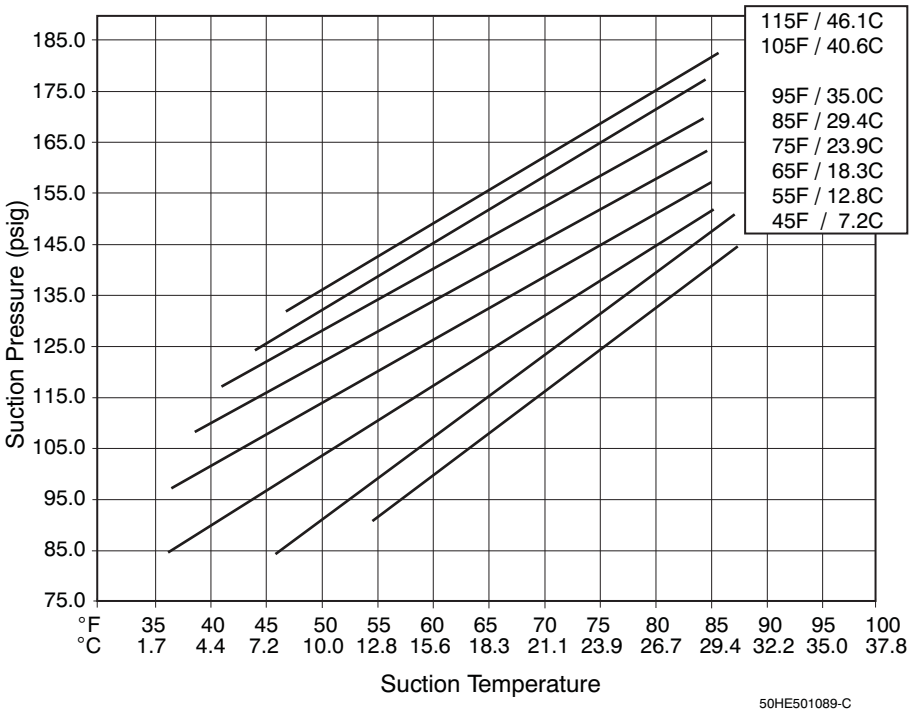

C12229

Fig. 25 – Cooling Charging Chart – 17.5 Ton (Circuit A)

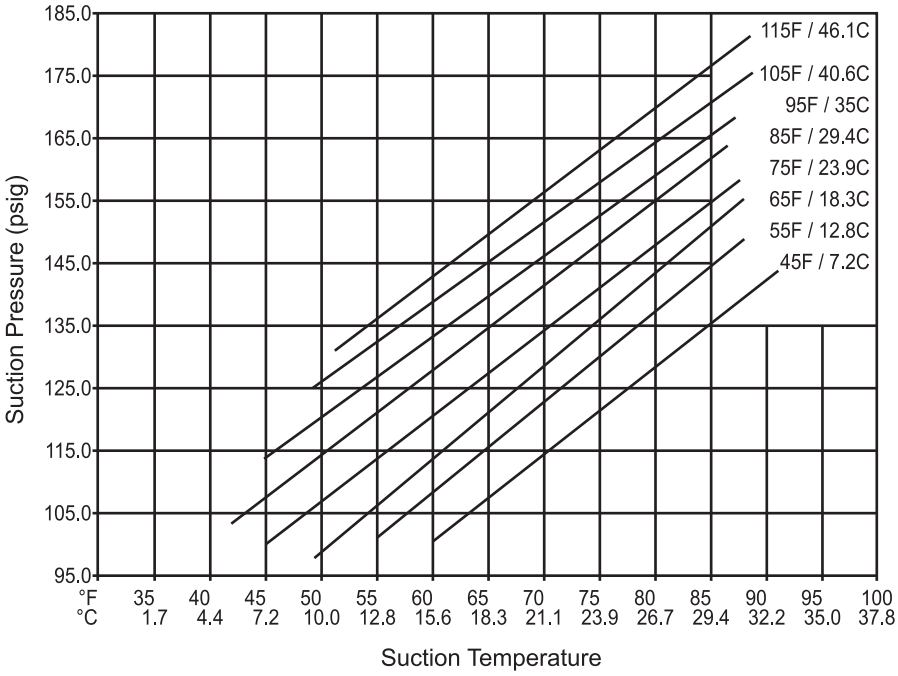

C12230A

Fig. 26 – Cooling Charging Chart – 17.5 Ton (Circuit B)

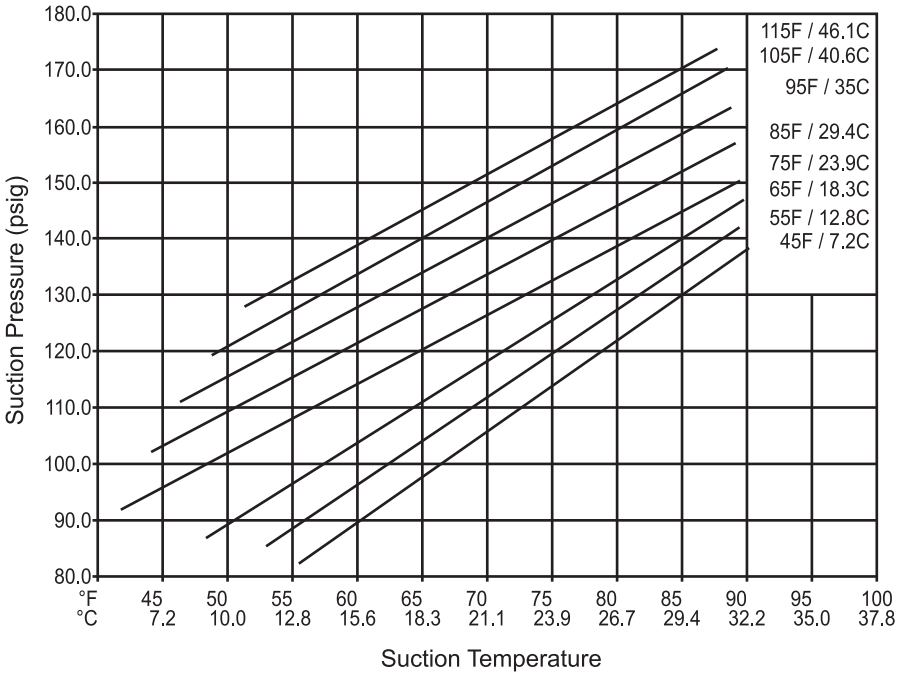

C12231A

Fig. 27 – Cooling Charging Chart – 20 Ton (Circuit A)

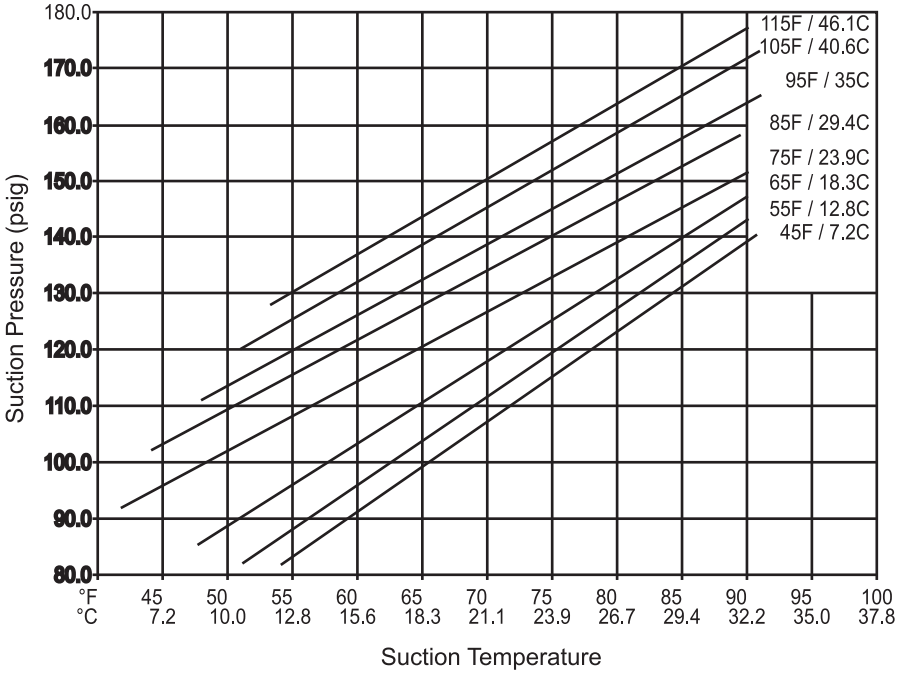

C12232A

Fig. 28 – Cooling Charging Chart – 20 Ton (Circuit B)

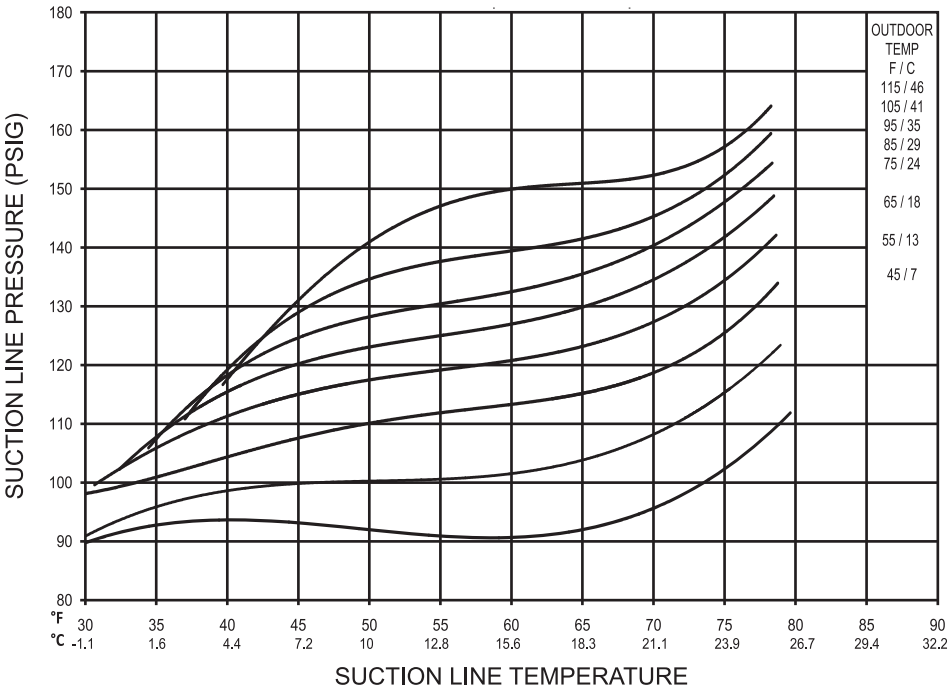

C12233A

Fig. 29 – Cooling Charging Chart – 25 Ton (Circuit A)

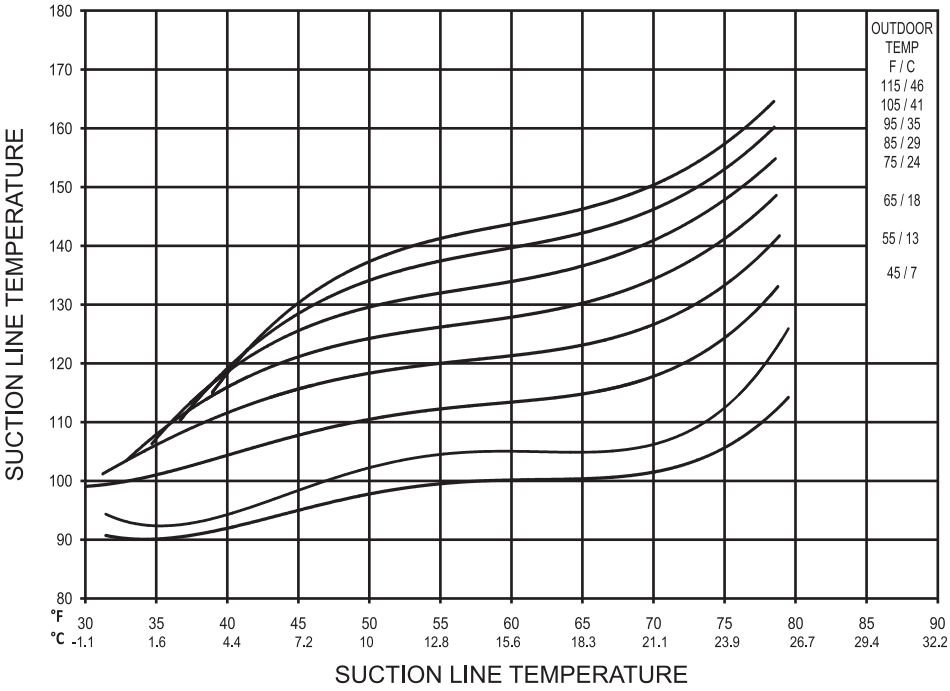

C12234A

Fig. 30 – Cooling Charging Chart – 25 Ton (Circuit B)

COMPRESSORS

Lubrication

The compressor is charged with the correct amount of oil at the factory.

⚠ WARNING

FIRE, EXPLOSION HAZARD

Failure to follow this warning could result in death, personal personal injury and/or property damage.

Never use air or gases containing oxygen for leak testing or for operating refrigerant compressors. Pressurized mixtures of air or gases containing oxygen can lead to an explosion.

⚠ WARNING

PERSONAL INJURY AND ENVIRONMENTAL HAZARD

Failure to follow this WARNING can result in personal injury or death.

Use a gauge set certified for use with Puron® (R−410A) refrigerant to relieve presure and recover all refrigerant before system repair or final unit disposal.

Wear safety glasses and gloves when handling refrigerants.

Keep torches and other ignition sources away from refrigerants and oils.

⚠ WARNING

FIRE, EXPLOSION HAZARD

Failure to follow this warning could result in death, personal personal injury and/or property damage.

Never use non−certified refrigerants in this product. Non−certified refrigerant could contain contaminant that could lead to unsafe operating conditions. Use ONLY refrigerants that conform to AHRI Standard 700.

Replacing the Compressor

The compressor using Puron® refrigerant contains a POE oil. This oil has a high affinity for moisture. Do not remove the compressor's tube plugs until ready to insert the unit suction and discharge tube line ends.

⚠ CAUTION

UNIT DAMAGE HAZARD

Failure to follow this caution may result in damage to components.

The compressor is in a Puron® refrigerant system and uses a polyolester (POE) oil. This oil is extremely hygroscopic, meaning it absorbs water readily. POE oils can absorb 15 times as much water as other oils designed for HCFC and CFC refrigerants. Avoid exposure of the oil to the atmosphere.

NOTE: Only factory−trained service technicians should remove and replace compressor units.

Compressor Mounting Bolts: Compressor mounting bolts should be periodically inspected for proper tightness. Bolts should be tightened and have the torque set at 65−75 in−lb (7.3 − 8.5 Nm).

Compressor Rotation

On 3−phase units with scroll compressors, it is important to be certain the compressor is rotating in the proper direction. To determine whether or not the compressor is rotating in the proper direction:

1. Connect service gauges to suction and discharge pressure fittings.
2. Energize the compressor.
3. The suction pressure should drop and the discharge pressure should rise, as is normal on any start−up.

NOTE: If the suction pressure does not drop and the discharge pressure does not rise to normal levels:

4. Note that the evaporator fan is probably also rotating in the wrong direction.
5. Turn off power to the unit. Use applicable lockout/tagout procedures.
6. Reverse any two of the unit power leads.
7. Reapply power to the compressor.

The suction and discharge pressure levels should now move to their normal start−up levels.

NOTE: When the compressor is rotating in the wrong direction, the unit makes an elevated level of noise and does not provide cooling.

Filter Drier

Replace the Filter Drier whenever the refrigerant system is exposed to atmosphere. Only use factory specified liquid−line filter driers with working pressures no less than 650 psig (4482 kPa). Do not install a suction−line filter drier in liquid line. A liquid−line filter drier designed for use with Puron® refrigerant is required on every unit.

Replacing the Filter Drier

Use the following steps to replace the Filter Drier.

1. Using a Puron® (R410) gauge set, recover all refrigerant from the system.
2. Use a tubing cutter to remove the filter drier from the line.

NOTE: Do Not use a torch to remove the old filter drier. The heat from the torch will allow contaminants into the air and into the open refrigeration system.

3. Sweat a new replacement filter drier into the refrigerant line.
4. Re-charge the refrigerant system.

Adjusting the Condenser–Fan

1. Shut off the unit power supply. Apply the appropriate lockout/tagout procedures.
2. Remove the condenser–fan assembly (grille, motor, and fan).
3. Loosen the fan hub setscrews.
4. Adjust the fan height as shown in Fig. 31.
5. Tighten the setscrews.
6. Replace the condenser–fan assembly.

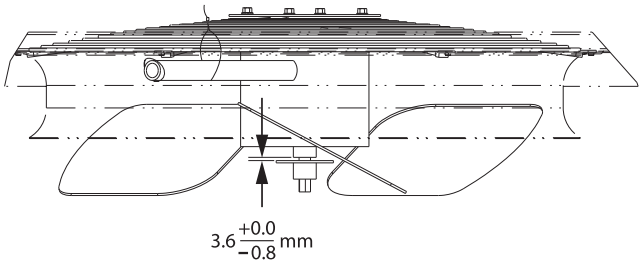

Fig. 31 – Condenser Fan Adjustment

TROUBLESHOOTING THE COOLING SYSTEM

Refer to Table 4 for additional troubleshooting topics.

Table 4 – Cooling Service Troubleshooting

PROBLEM	CAUSE	REMEDY
Compressor and Condenser Fan Will Not Start.	Power failure.	Call power company.
	Fuse blown or circuit breaker tripped.	Replace fuse or reset circuit breaker.
	Defective thermostat, contactor, transformer, or control relay.	Replace defective component.
	Insufficient line voltage.	Determine cause and correct.
	Incorrect or faulty wiring.	Check wiring diagram and rewire correctly.
	Thermostat setting too high.	Lower thermostat setting below room temperature.
Compressor Will Not Start But Condenser Fan Runs.	Faulty wiring or loose connections in compressor circuit.	Check wiring and repair or replace. Tighten loose connections.
	Compressor motor burned out, seized, or internal overload open.	Determine cause. Replace compressor.
	Defective run/start capacitor, overload, start relay.	Determine cause and replace defective component.
	One leg of three−phase power dead.	Replace fuse or reset circuit breaker. Determine cause.
Compressor Cycles (other than normally satisfying thermostat).	Refrigerant overcharge or undercharge.	Recover refrigerant, evacuate system, and recharge to values on nameplate.
	Defective compressor.	Replace defective compressor.
	Insufficient line voltage.	Determine cause and correct.
	Blocked condenser.	Determine cause and correct.
	Defective run/start capacitor, overload, or start relay.	Determine cause and replace.
	Defective thermostat.	Replace thermostat.
	Faulty condenser−fan motor or capacitor.	Replace. Defective fan motor or capacitor.
	Restriction in refrigerant system.	Locate restriction and remove.
Compressor Operates Continuously.	Dirty air filter.	Replace filter.
	Unit undersized for load.	Decrease load or replace with larger unit.
	Thermostat set too low.	Reset thermostat.
	Low refrigerant charge.	Locate leak; repair and recharge.
	Leaking valves in compressor.	Replace compressor.
	Air in system.	Recover refrigerant, evacuate system, and recharge.
	Condenser coil dirty or restricted.	Clean coil or remove restriction.
Excessive Head Pressure.	Dirty air filter.	Replace air filter.
	Dirty condenser coil.	Clean condenser coil.
	Refrigerant overcharged.	Recover excess refrigerant.
	Faulty TXV valve.	1. Check TXV bulb mounting and secure tightly to suction line and insulate. 2. Replace TXV valve and filter drier if stuck open or closed.
	Air in system.	Recover refrigerant, evacuate system, and recharge.
	Condenser air restricted or air short−cycling.	Determine cause and correct.
Head Pressure Too Low.	Low refrigerant charge.	Check for leaks; repair and recharge.
	Compressor valves leaking.	Replace compressor.
	Restriction in liquid tube.	Remove restriction.
Excessive Suction Pressure.	High head load.	Check for source and eliminate.
	Compressor valves leaking.	Replace compressor.
	Refrigerant overcharged.	Recover excess refrigerant.
Suction Pressure Too Low.	Dirty air filter.	Replace filter.
	Low refrigerant charge.	Check for leaks; repair and recharge.
	Metering device or low side restricted.	Remove source of restriction.
	Faulty TXV valve.	1. Check TXV bulb mounting and secure tightly to suction line and insulate. 2. Replace TXV valve and filter drier if stuck open or closed.
	Insufficient evaporator airflow.	Increase air quantity. Check filter and replace if necessary. Check belt tension on blower.
	Temperature too low in conditioned area.	Reset thermostat.
	Outdoor ambient below 25°F.	Install low−ambient kit.
Evaporator Fan Will Not Shut Off.	Time off delay not finished.	Wait for 30−second off delay.
Compressor Makes Excessive Noise.	Compressor rotating in wrong direction.	Reverse the 3−phase power leads.

CONVENIENCE OUTLETS

⚠ WARNING

ELECTRICAL OPERATION HAZARD

Failure to follow this warning could result in personal injury or death.

Units with convenience outlet circuits may use multiple disconnects. Check convenience outlet for power status before opening unit for service. Locate its disconnect switch, if appropriate, and open it. Tag–out this switch, if necessary.

Two types of convenience outlets are offered on 48TC models: Non–powered and unit–powered. Both types provide a 125–volt Ground–Fault Circuit–Interrupter (GFCI) duplex receptacle rated at 15A behind a hinged waterproof access cover, located on the end panel of the unit. See Fig. 32.

Non–Powered Type

This type requires the field installation of a general–purpose 125–volt 15A circuit powered from a source elsewhere in the building. Observe national and local codes when selecting wire size, fuse or breaker requirements and disconnect switch size and location. Route 125V power supply conductors into the bottom of the utility box containing the duplex receptacle.

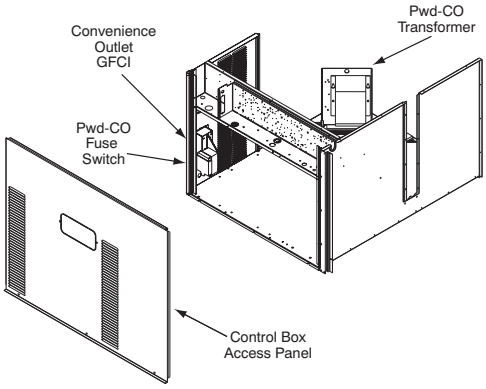

C08128

Fig. 32 – Convenience Outlet Location

Unit–Powered Type

A unit–mounted transformer is factory–installed to stepdown the main power supply voltage to the unit to 115–v at the duplex receptacle. This option also includes a manual switch with fuse, located in a utility box and mounted on a bracket behind the convenience outlet; access is through the unit's control box access panel. See Fig. 33.

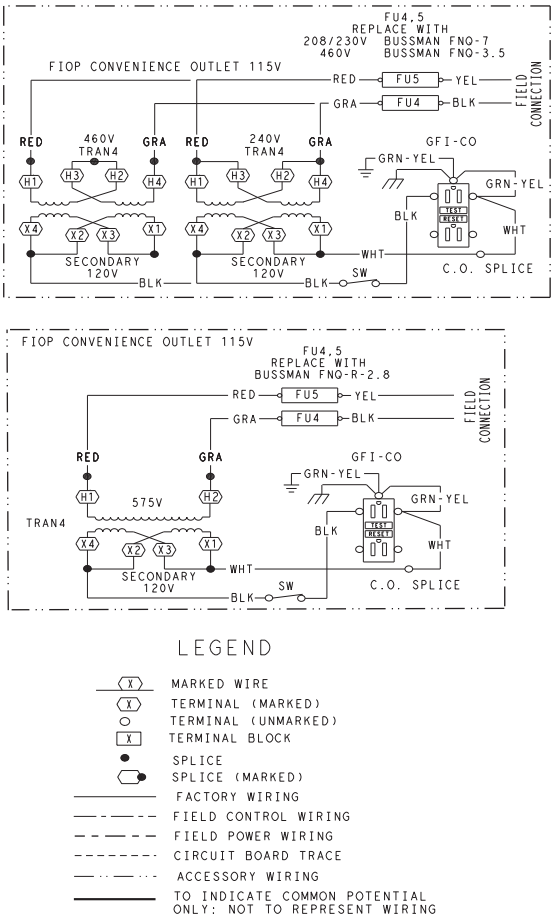

C10324

Fig. 33 – Powered Convenience Outlet Wiring

UNIT VOLTAGE	CONNECT AS	PRIMARY CONNECTIONS	TRANSFORMER TERMINALS
208, 230	240	L1: RED +YEL L2: BLU + GRA	H1 + H3 H2 + H4
460	480	L1: RED Splice BLU + YEL L2: GRA	H1 H2 + H3 H4
575	600	L1: RED L2: GRA	H1 H2

Wet in Use Convenience Outlet Cover

The unit has a "wet in use" convenience outlet cover that must be installed on the panel containing the convenience outlet. This cover provides protection against moisture entering the GFCI receptacle. This cover is placed in the unit control box during shipment.

Duty Cycle

The unit-powered convenience outlet has a duty cycle limitation. The transformer is intended to provide power on an intermittent basis for service tools, lamps, etc. It is not intended to provide 15-amps loading for continuous duty loads (such as electric heaters for overnight use). Observe a 50% limit on circuit loading above 8 amps (i.e., limit loads exceeding 8 amps to 30 minutes of operation every hour).

The primary leads to the convenience outlet transformer are not factory–connected. Selection of primary power source is a customer–option. If local codes permit, the transformer primary leads can be connected at the line–side terminals on a unit–mounted non–fused disconnect or circuit breaker switch; this will provide service power to the unit when the unit disconnect switch or circuit breaker is open. Other connection methods will result in the convenience outlet circuit being de–energized when the unit disconnect or circuit breaker is open. See Fig. 33.

GFCI Maintenance

Periodically test the GFCI receptacle by pressing the TEST button on the face of the receptacle.

1. Press the TEST button on the face of the receptacle. This should cause the internal circuit of the receptacle to trip and open the receptacle.
2. Check for proper grounding and power line phasing should the GFCI receptacle fail to trip.
3. Repair ground wire connections as needed and correct the line phasing.
4. Press RESET button to clear the tripped condition.

Fuse On Powered Type

The factory fuse is a Bussman “Fusetron” T–15, non–renewable screw–in (Edison base) type plug fuse.

Using Unit–Mounted Convenience Outlets

Units with unit–mounted convenience outlet circuits will often require that two disconnects be opened to de–energize all power to the unit. Treat all units as electrically energized until the convenience outlet power is also checked and de–energization is confirmed. Observe National Electrical Code Article 210, Branch Circuits, for use of convenience outlets. Always use a volt meter to verify no voltage is present at the GFCI receptacles before working on the unit.

Installing a Weatherproof Cover

A weatherproof while-in-use cover for the factory installed convenience outlets is now required by UL standards. This cover cannot be factory-mounted due to its depth. The cover must be installed at the unit installation. For shipment, the convenience outlet is covered with a blank cover plate.

The weatherproof cover kit is shipped in the unit’s control box. The kit includes the hinged cover, backing plate and gasket.

⚠ WARNING

ELECTRICAL OPERATION HAZARD

Failure to follow this warning could result in personal injury or death.

Before performing service or maintenance operations on the convenience outlets, Lockout/Tagout all electrical power to the unit.

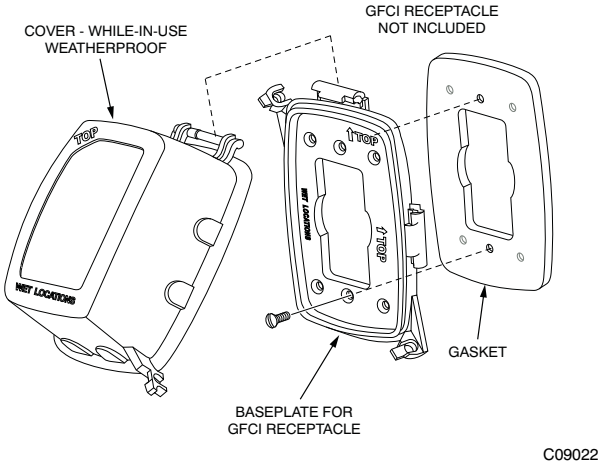

Fig. 34 – Weatherproof Cover Installation

1. Remove the blank cover plate at the convenience outlet. Discard the blank cover.
2. Loosen the two screws at the GFCI duplex outlet until approximately 1/2–in (13 mm) under the screw heads is exposed.
3. Press the gasket over the screw heads. Slip the backing plate over the screw heads at the keyhole slots and align with the gasket; tighten the two screws until snug. Do not over–tighten.
4. Mount the weatherproof cover to the backing plate as shown in Fig. 34.
5. Remove two slot fillers in the bottom of the cover to allow service tool cords to exit the cover.
6. Check the cover installation to confirm full closing and latching.

SMOKE DETECTORS

Smoke detectors are available as factory–installed options on 48TC models. Smoke detectors may be specified for Supply Air only or for Return Air without or with economizer or in combination of Supply Air and Return Air. Return Air smoke detectors are arranged for vertical return configurations only. All components necessary for operation are factory–provided and mounted. The unit is factory–configured for immediate smoke detector shutdown operation; additional wiring or modifications to unit terminal board may be necessary to complete the unit and smoke detector configuration to meet project requirements.

System

The smoke detector system consists of a four–wire controller (HT28TZ001) and one or two sensors (HT50TZ001). Its primary function is to shut down the rooftop unit in order to prevent smoke from circulating throughout the building. It is not to be used as a life saving device.

Controller

The controller (see Fig. 35) includes a controller housing, a printed circuit board, and a clear plastic cover. The controller can be connected to one or two compatible duct smoke sensors. The clear plastic cover is secured to the housing with a single captive screw for easy access to the

wiring terminals. The controller has three LEDs: Power, Trouble and Alarm. A manual test/reset button is located on the cover face.

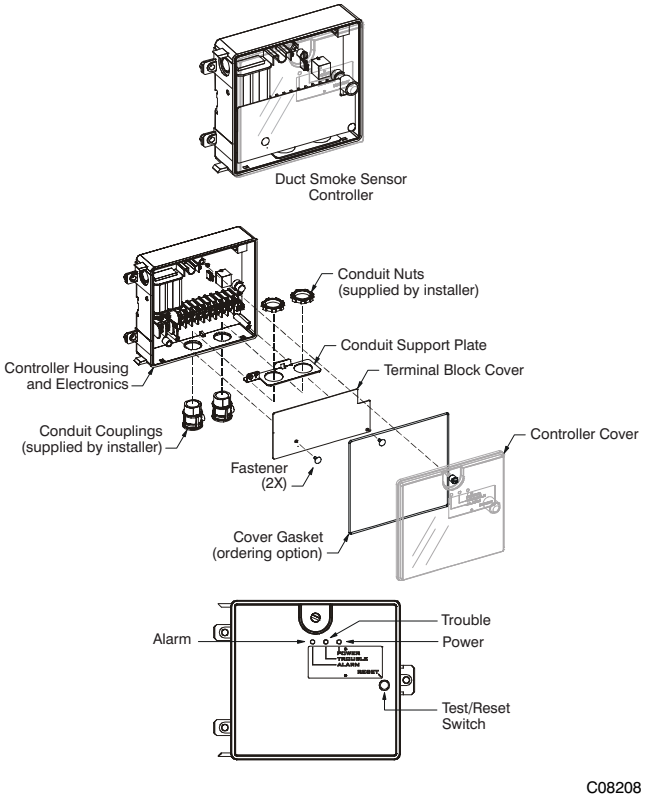

Fig. 35 – Controller Assembly

Sensor

The sensor (see Fig. 36) includes a plastic housing, a printed circuit board, a clear plastic cover, a sampling tube inlet and an exhaust tube. The sampling tube, when used, and exhaust tube are attached during installation. The sampling tube varies in length depending on the size of the rooftop unit. The clear plastic cover permits visual inspections without having to disassemble the sensor. The cover attaches to the sensor housing using four captive screws and forms an airtight chamber around the sensing electronics. Each sensor includes a harness with an RJ45 terminal for connecting to the controller. Each sensor has four LEDs: Power, Trouble, Alarm and Dirty. A manual test/reset button is located on the left side of the housing.

Air is introduced to the duct smoke detector sensor's sensing chamber through a sampling tube that extends into the HVAC duct and is directed back into the ventilation system through a (shorter) exhaust tube. The difference in air pressure between the two tubes pulls the sampled air through the sensing chamber. When a sufficient amount of smoke is detected in the sensing chamber, the sensor signals an alarm state and the controller automatically takes the appropriate action to shut down fans and blowers, change over air handling systems, notify the fire alarm control panel, etc.

The sensor uses a photoelectric (light scattering principle) process called *differential sensing* to prevent gradual environmental changes from triggering false alarms. A rapid change in environmental conditions, such as smoke from a fire, causes the sensor to signal an alarm state but dust and debris accumulated over time does not.

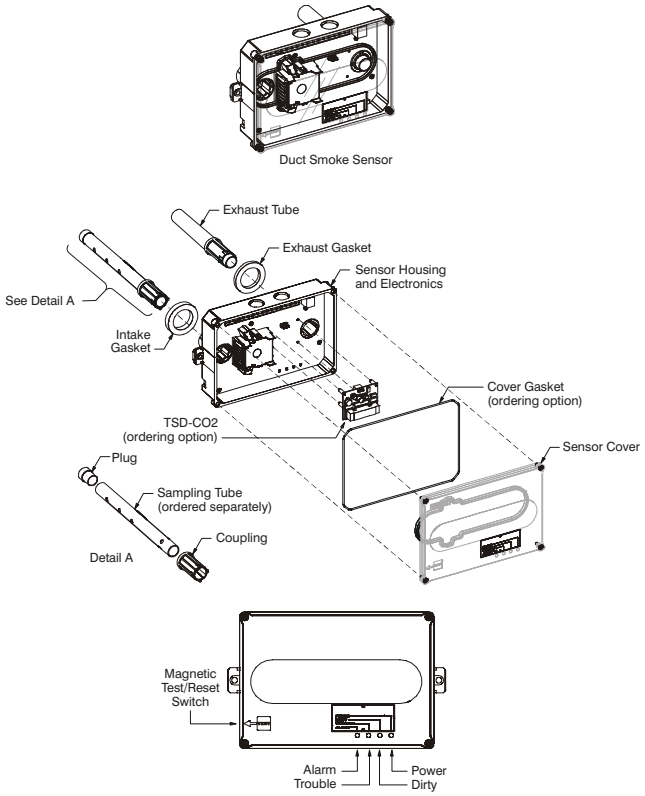

Fig. 36 – Smoke Detector Sensor

For installations using two sensors, the duct smoke detector does not differentiate which sensor signals an alarm or trouble condition.

Smoke Detector Locations

Supply Air

The Supply Air smoke detector sensor is located to the left of the unit's indoor (supply) fan. See Fig. 37. Access is through the fan access panel. There is no sampling tube used at this location. The sampling tube inlet extends through the side plate of the fan housing (into a high pressure area). The controller is located on a bracket to the right of the return filter, accessed through the lift–off filter panel.

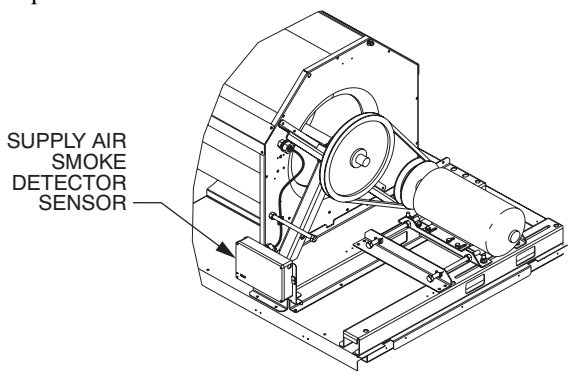

Fig. 37 – Typical Supply Air Smoke Detector Sensor Location

Return Air without Economizer

The sampling tube is located across the return air opening on the unit basepan. See Fig. 38. The holes in the sampling tube face downward, into the return air stream. The sampling tube is attached to the control module bushing that extends from the control box through the partition into the return air section of the unit. The sensor tube is shipped mounted to the Indoor Blower Housing and must be relocated to the return air section of the unit. Installation requires that this sensing tube be attached to the control module bushing. See installation steps.

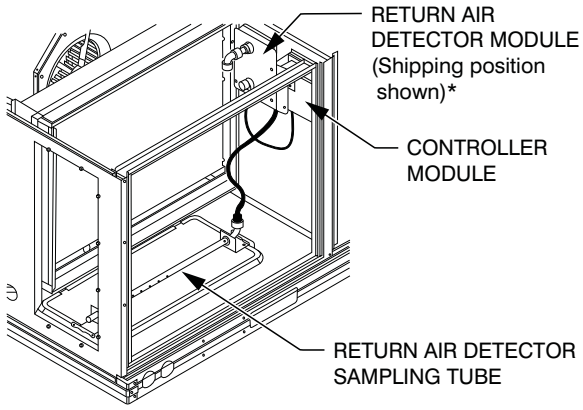

*RA detector must be moved from shipping position to operating position by installer

C07307

Fig. 38 – Typical Return Air Detector Location

Return Air with Economizer

The sampling tube is inserted through the side plates of the economizer housing, placing it across the return air opening on the unit basepan. See Fig. 39. The holes in the sampling tube face downward, into the return air stream. The sampling tube is connected through tubing to the return air sensor that is mounted on a bracket high on the partition between return filter and controller location. The Return Air Sensor is shipped in a flat–mounting location. Installation requires that this sensor be relocated to its operating location and the tubing to the sampling tube be connected. See installation steps.

FIOP Smoke Detector Wiring and Response

All units: The FIOP smoke detector is configured to automatically shut down all unit operations when a smoke condition is detected. See Fig. 40, Smoke Detector Wiring.

Highlight A: The JMP 3 is factory–cut, transferring unit control to the smoke detector.

Highlight B: The smoke detector NC contact set will open on a smoke alarm condition, de–energizing the ORN conductor.

Highlight C: 24V power signal using the ORN lead is removed at the Smoke Detector input on the Central Terminal board (CTB); all unit operations cease immediately.

PremierLinkt **and RTU––Open Controls**: Unit operating functions (fan, cooling and heating) are terminated as described above. In addition:

Highlight D: On smoke alarm condition, the smoke detector NO Alarm contact will close, supplying 24V power to the GRA conductor.

Highlight E: The GRA lead at the Smoke Alarm input on LCTB provides a 24V signal to the FIOP DDC control.

PremierLink: This signal is conveyed to PremierLink FIOP's TB1 at terminal TB1–6 (BLU lead). This signal initiates the FSD sequence by the PremierLink control. FSD status is reported to the connected CCN network.

RTU–OPEN: The 24V signal is conveyed to the RTU–OPEN J1–10 input terminal. This signal initiates the FSD sequence by the RTU–OPEN control. FSD status is reported to the connected BAS network.

Using Remote Logic: Five field–use conductors are provided for additional annunciation functions.

Additional Application Data: Refer to Catalog number HKRNKA–1XA for discussions on additional control features of these smoke detectors, including multiple unit coordination.

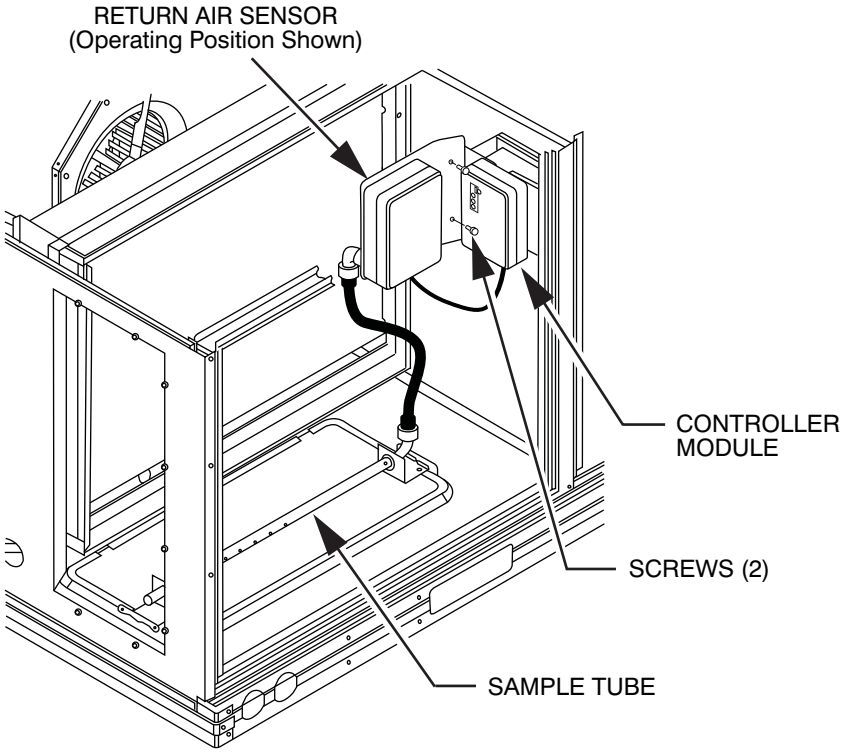

C12050

Fig. 39 – Return Air Sampling Tube Location in Unit with Economizer

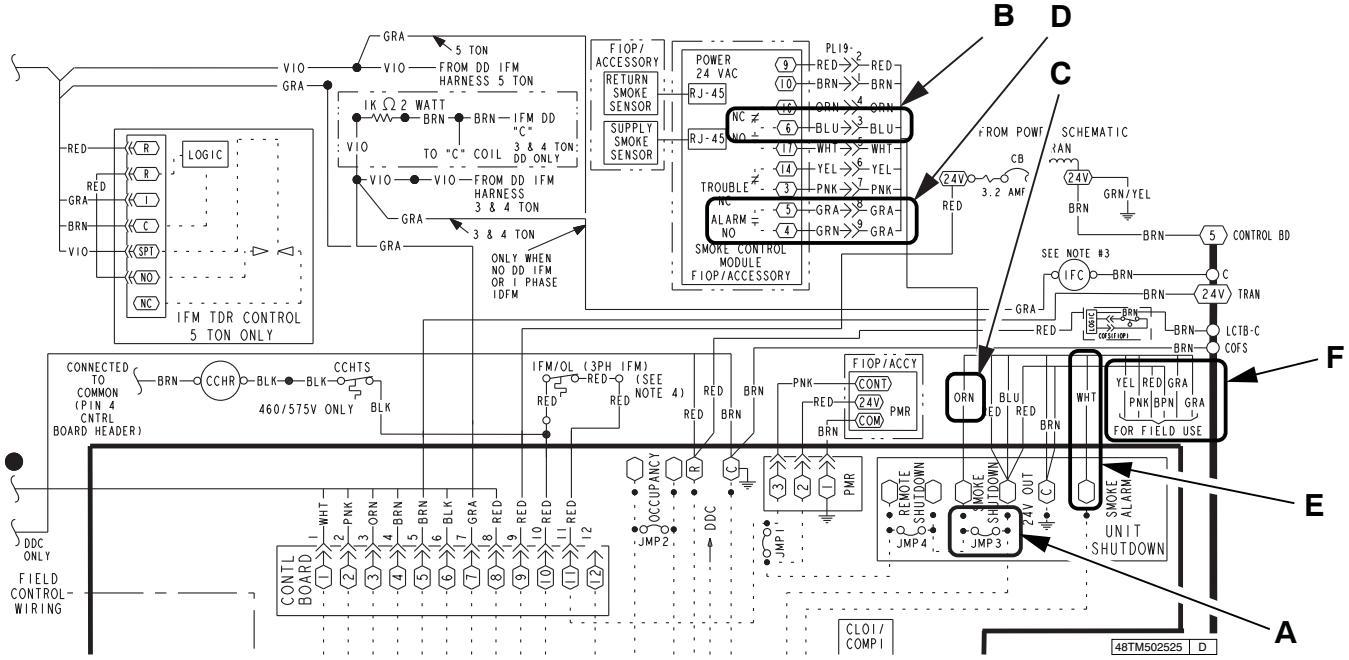

C12559

Fig. 40 – Typical Smoke Detector System Wiring

Sensor and Controller Tests

Sensor Alarm Test

The sensor alarm test checks a sensor's ability to signal an alarm state. This test requires that you use a field provided SD–MAG test magnet.

NOTICE

OPERATIONAL TEST NOTICE

Failure to follow this NOTICE may result in an unnecessary evacuation of the facility.

This test places the duct detector into the alarm state. Unless part of the test, disconnect all auxiliary equipment from the controller before performing the test. If the duct detector is connected to a fire alarm system, notify the proper authorities before performing the test.

Sensor Alarm Test Procedure

1. Hold the test magnet where indicated on the side of the sensor housing for seven seconds.
2. Verify that the sensor's Alarm LED turns on.
3. Reset the sensor by holding the test magnet against the sensor housing for two seconds.
4. Verify that the sensor's Alarm LED turns off.

Controller Alarm Test

The controller alarm test checks the controller's ability to initiate and indicate an alarm state.

NOTICE

OPERATIONAL TEST NOTICE

Failure to follow this NOTICE may result in an unnecessary evacuation of the facility.

This test places the duct detector into the alarm state. Unless part of the test, disconnect all auxiliary equipment from the controller before performing the test. If the duct detector is connected to a fire alarm system, notify the proper authorities before performing the test.

Controller Alarm Test Procedure

1. Press the controller's test/reset switch for seven seconds.
2. Verify that the controller's Alarm LED turns on.
3. Reset the sensor by pressing the test/reset switch for two seconds.
4. Verify that the controller's Alarm LED turns off.

Dirty Controller Test

The dirty controller test checks the controller's ability to initiate a dirty sensor test and indicate its results.

NOTICE

OPERATIONAL TEST NOTICE

Failure to follow this NOTICE may result in an unnecessary evacuation of the facility.

Pressing the controller's test/reset switch for longer than seven seconds will put the duct detector into the alarm state and activate all automatic alarm responses.

Dirty Controller Test Procedure

1. Press the controller's test/reset switch for two seconds.
2. Verify that the controller's Trouble LED flashes.

Dirty Sensor Test

The dirty sensor test provides an indication of the sensor's ability to compensate for gradual environmental changes. A sensor that can no longer compensate for environmental changes is considered 100% dirty and requires cleaning or replacing. You must use a field provided SD–MAG test magnet to initiate a sensor dirty test. The sensor's Dirty LED indicates the results of the dirty test as shown in Table 5.

NOTICE

OPERATIONAL TEST NOTICE

Failure to follow this NOTICE may result in an unnecessary evacuation of the facility.

Holding the test magnet against the sensor housing for more than seven seconds will put the duct detector into the alarm state and activate all automatic alarm responses.

Table 5 – Dirty LED Test

FLASHES	DESCRIPTION
1	0–25% dirty. (Typical of a newly installed detector)
2	25–50% dirty
3	51–75% dirty
4	76–99% dirty

Dirty Sensor Test Procedure

1. Hold the test magnet where indicated on the side of the sensor housing for two seconds.
2. Verify that the sensor's Dirty LED flashes.

NOTICE

OPERATIONAL TEST NOTICE

Failure to follow this NOTICE may result in an unnecessary evacuation of the facility.

Changing the dirty sensor test operation will put the detector into the alarm state and activate all automatic alarm responses. Before changing dirty sensor test operation, disconnect all auxiliary equipment from the controller and notify the proper authorities if connected to a fire alarm system.

Changing the Dirt Sensor Test

By default, sensor dirty test results are indicated by:

- The sensor's Dirty LED flashing.
- The controller's Trouble LED flashing.
- The controller's supervision relay contacts toggle.

The operation of a sensor's dirty test can be changed so that the controller's supervision relay is not used to indicate test results. When two detectors are connected to a controller, sensor dirty test operation on both sensors must be configured to operate in the same manner.

To Configure the Dirty Sensor Test Operation

1. Hold the test magnet where indicated on the side of the sensor housing for approximately 60 seconds until the sensor's Alarm LED turns on and its Dirty LED flashes twice.
2. Reset the sensor by removing the test magnet and then holding it against the sensor housing again for approximately 2 seconds until the sensor's Alarm LED turns off.

Remote Station Test

The remote station alarm test checks a test/reset station's ability to initiate and indicate an alarm state.

NOTICE

OPERATIONAL TEST NOTICE

Failure to follow this NOTICE may result in an unnecessary evacuation of the facility.

Changing the dirty sensor test operation will put the detector into the alarm state and activate all automatic alarm responses. Before changing the dirty sensor test operation, disconnect all auxiliary equipment from the controller and notify proper authorities if connected to a fire alarm system.

SD–TRK4 Remote Alarm Test Procedure

1. Turn the key switch to the RESET/TEST position for seven seconds.
2. Verify that the test/reset station's Alarm LED turns on.
3. Reset the sensor by turning the key switch to the RESET/TEST position for two seconds.
4. Verify that the test/reset station's Alarm LED turns off.

Remote Test/Reset Station Dirty Sensor Test

The test/reset station dirty sensor test checks the test/reset station's ability to initiate a sensor dirty test and indicate the results. It must be wired to the controller as shown in Fig. 41 and configured to operate the controller's supervision relay. For more information, see "Changing the Dirty Sensor Test."

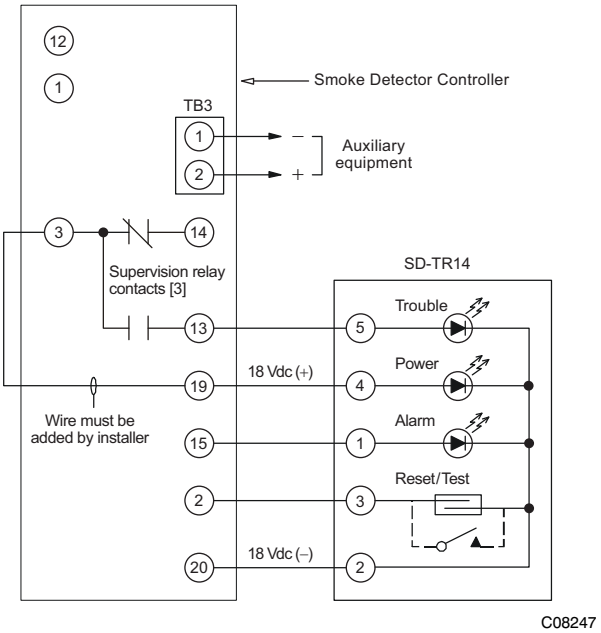

Fig. 41 – Remote Test/Reset Station Connections

NOTICE

OPERATIONAL TEST NOTICE

Failure to follow this NOTICE can result in an unnecessary evacuation of the facility.

If the test/reset station's key switch is left in the RESET/TEST position for longer than seven seconds, the detector will automatically go into the alarm state and activate all automatic alarm responses.

NOTICE

OPERATIONAL TEST NOTICE

Failure to follow this NOTICE can result in an unnecessary evacuation of the facility.

Holding the test magnet to the target area for longer than seven seconds will put the detector into the alarm state and activate all automatic alarm responses.

Dirty Sensor Test Using an SD–TRK4

1. Turn the key switch to the RESET/TEST position for two seconds.
2. Verify that the test/reset station's Trouble LED flashes.

Detector Cleaning

Cleaning the Smoke Detector

Clean the duct smoke sensor when the Dirty LED is flashing continuously or sooner if conditions warrant.

NOTICE

OPERATIONAL TEST NOTICE

Failure to follow this NOTICE can result in an unnecessary evacuation of the facility.

If the smoke detector is connected to a fire alarm system, first notify the proper authorities that the detector is undergoing maintenance then disable the relevant circuit to avoid generating a false alarm.

1. Disconnect power from the duct detector then remove the sensor's cover. (See Fig. 42.)

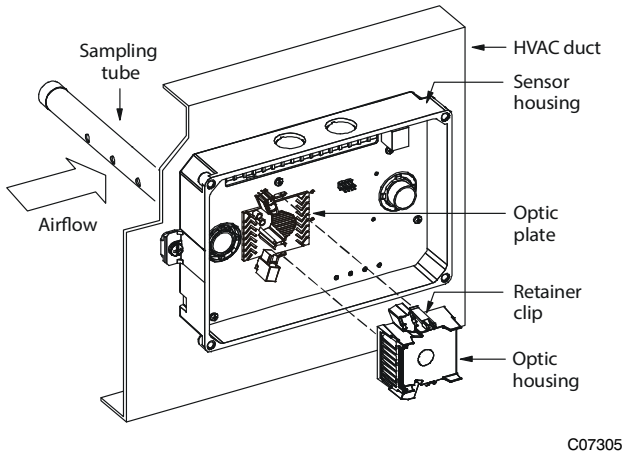

Fig. 42 – Sensor Cleaning Diagram

2. Using a vacuum cleaner, clean compressed air, or a soft bristle brush, remove loose dirt and debris from inside the sensor housing and cover.
   Use isopropyl alcohol and a lint–free cloth to remove dirt and other contaminants from the gasket on the sensor's cover.
3. Squeeze the retainer clips on both sides of the optic housing then lift the housing away from the printed circuit board.
4. Gently remove dirt and debris from around the optic plate and inside the optic housing.
5. Replace the optic housing and sensor cover.
6. Connect power to the duct detector then perform a sensor alarm test.

INDICATORS

Normal State

The smoke detector operates in the normal state in the absence of any trouble conditions and when its sensing chamber is free of smoke. In the normal state, the Power LED on both the sensor and the controller are on and all other LEDs are off.

Alarm State

The smoke detector enters the alarm state when the amount of smoke particulate in the sensor's sensing chamber exceeds the alarm threshold value. (See Table 6.) Upon entering the alarm state:

- The sensor's Alarm LED and the controller's Alarm LED turn on.
- The contacts on the controller's two auxiliary relays switch positions.
- The contacts on the controller's alarm initiation relay close.
- The controller's remote alarm LED output is activated (turned on).
- The controller's high impedance multiple fan shutdown control line is pulled to ground Trouble state.

The SuperDuct duct smoke detector enters the trouble state under the following conditions:

- A sensor's cover is removed and 20 minutes pass before it is properly secured.
- A sensor's environmental compensation limit is reached (100% dirty).
- A wiring fault between a sensor and the controller is detected.

An internal sensor fault is detected upon entering the trouble state:

- The contacts on the controller's supervisory relay switch positions. (See Fig. 43.)
- If a sensor trouble, the sensor's Trouble LED the controller's Trouble LED turn on.
- If 100% dirty, the sensor's Dirty LED turns on and the controller's Trouble LED flashes continuously.
- If a wiring fault between a sensor and the controller, the controller's Trouble LED turns on but not the sensor's.

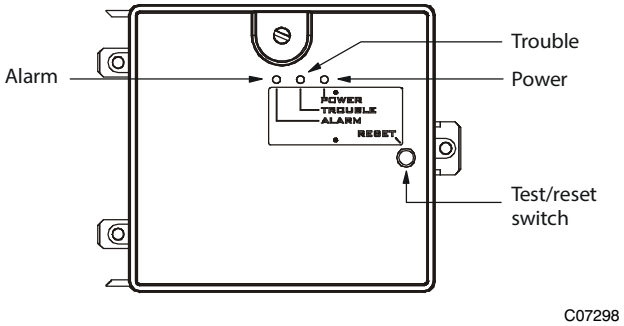

Fig. 43 – Controller Assembly

NOTE: All troubles are latched by the duct smoke detector. The trouble condition must be cleared and then the duct smoke detector must be reset in order to restore it to the normal state.

Table 6 – Detector Indicators

CONTROL OR INDICATOR	DESCRIPTION
Magnetic test/reset switch	Resets the sensor when it is in the alarm or trouble state. Activates or tests the sensor when it is in the normal state.
Alarm LED	Indicates the sensor is in the alarm state.
Trouble LED	Indicates the sensor is in the trouble state.
Dirty LED	Indicates the amount of environmental compensation used by the sensor (flashing continuously = 100%)
Power LED	Indicates the sensor is energized.

Resetting Alarm and Trouble Condition Trips:

Manual reset is required to restore smoke detector systems to Normal operation. For installations using two sensors, the duct smoke detector does not differentiate which sensor signals an alarm or trouble condition. Check each sensor for Alarm or Trouble status. Clear the condition that has generated the trip at this sensor. Then reset the sensor by pressing and holding the reset button (on the side) for 2 seconds. Verify that the sensor's Alarm and Trouble LEDs are now off. At the controller, clear its Alarm or Trouble state by pressing and holding the manual reset button (on the front cover) for 2 seconds. Verify that the controller's Alarm and Trouble LEDs are now off. Replace all panels.

Troubleshooting

Controller's Trouble LED is On

1. Check the Trouble LED on each sensor connected to the controller. If a sensor's Trouble LED is on, determine the cause and make the necessary repairs.
2. Check the wiring between the sensor and the controller. If wiring is loose or missing, repair or replace as required.

Controller's Trouble LED is Flashing

1. One or both of the sensors is 100% dirty.
2. Determine which Dirty LED is flashing then clean that sensor assembly as described in the detector cleaning section.

Sensor's Trouble LED is On

1. Check the sensor's Dirty LED. If it is flashing, the sensor is dirty and must be cleaned.
2. Check the sensor's cover. If it is loose or missing, secure the cover to the sensor housing.
3. Replace sensor assembly.

Sensor's Power LED is Off

1. Check the controller's Power LED. If it is off, determine why the controller does not have power and make the necessary repairs.
2. Check the wiring between the sensor and the controller. If wiring is loose or missing, repair or replace as required.

Controller's Power LED is Off

1. Make sure the circuit supplying power to the controller is operational. If not, make sure JP2 and JP3 are set correctly on the controller before applying power.
2. Verify that power is applied to the controller's supply input terminals. If power is not present, replace or repair wiring as required.

Remote Test/Reset Station's Trouble LED Does Not flash When Performing a Dirty Test, but the Controller's Trouble LED Does

1. Verify that the remote test/station is wired as shown in Fig. 41. Repair or replace loose or missing wiring.
2. Configure the sensor dirty test to activate the controller's supervision relay. See "Changing Sensor Dirty Test Operation."

Sensor's Trouble LED is On, But the Controller's Trouble LED is OFF

Remove JP1 on the controller.

PROTECTIVE DEVICES

Compressor Protection

Overcurrent

The compressor has internal linebreak motor protection. Reset is automatic after compressor motor has cooled.

Overtemperature

Each compressor has an internal protector to protect it against excessively high discharge gas temperatures. Reset is automatic.

High Pressure Switch

The system is provided with a high pressure switch mounted on the discharge line. The switch is stem−mounted and brazed into the discharge tube. Trip setting is 630 psig ± 10 psig (4344 ± 69 kPa) when hot. Reset is automatic at 505 psig (3482 kPa).

Low Pressure Switch

The system is protected against a loss of charge and low evaporator coil loading condition by a low pressure switch located on the suction line near the compressor. The switch is stem−mounted. Trip setting is 54 psig ± 5 psig (372 ± 34 kPa). Reset is automatic at 117 ± 5 psig (807 ± 34 kPa).

Supply (Indoor) Fan Motor Protection

⚠ WARNING

PERSONAL INJURY HAZARD

Failure to follow this WARNING can result in personal injury.

Disconnect all electrical power when servicing the fan motor. Apply appropriate lockout/tagout procedures.

Motors with 2.9 and 3.7 bhp are equipped with an internal overtemperature or protection device. The type of device depends on the motor size. See Table 7.

The High Static option supply fan motor is equipped with a pilot–circuit Thermix combination overtemperature/ overcurrent protection device. This device resets automatically. Do not bypass this switch to correct trouble. Determine the cause and correct it.

The Thermik device is a snap–action overtemperature protection device that is embedded in the motor windings. The Thermik can be identified by two blue wires extending out of the motor control box. It is a pilot–circuit device that is wired into the unit's 24V control circuit. When this switch reaches its trip setpoint, it opens the 24V control circuit and causes all unit operation to cease. This device resets automatically when the motor windings cool. Do not bypass this switch to correct trouble. Determine the cause and correct it.

The External Overload Breaker is an overcurrent device used on motors with a horsepower rating of 4.7 hp or greater. This is a specially–calibrated circuit breaker that is UL recognized as a motor overload controller. When the current to the motor exceeds the circuit breaker setpoint, the device opens all motor power leads to the motor, shutting the motor down. Reset requires a manual reset at the overload switch. This device (designated IFCB) is located on the side of the supply fan housing, behind the fan access panel. The Must Hold and Must Trip values are listed on the side of the External Overload Breaker.

Troubleshooting Supply Fan Motor Overload Trips

The supply fan used in 48TC units is a forward–curved centrifugal wheel. At a constant wheel speed, this wheel has a characteristic that causes the fan shaft load to DECREASE when the static pressure in the unit–duct system increases and to INCREASE when the static pressure in the unit–duct system decreases (and fan airflow rate increases). Motor overload conditions typically develop when the unit is operated with an access panel removed, with unfinished duct work, in an economizer–open mode, or a leak develops in the duct system that allows a bypass back to unit return opening.

Table 7 – Overcurrent Device Type

Motor Size (bhp)	Overload Device	Reset
1.7	Internal Linebreak	Automatic
2.4	Internal Linebreak	Automatic
2.9	Thermik	Automatic
3.7	Thermik	Automatic
4.7	External (circuit breaker)	Manual

Condenser Fan Motor Protection

The condenser fan motor is internally protected against overtemperature.

Control Circuit, 24–V

The control circuit is protected against overcurrent conditions by a circuit breaker mounted on the control transformer TRAN. Reset is manual.

The factory–installed PremierLink Controller includes the supply–air temperature (SAT) sensor. The outdoor air temperature (OAT) sensor is included in the FIOP/accessory EconoMi$er 2 package.

Refer to Fig. 44 for PremierLink™ connection locations.

NOTE: Refer to *PremierLink™ Installation, Start–Up and Configuration Instructions.* Have a copy of this manual available at unit start–up.

PREMIERLINK™ CONTROL

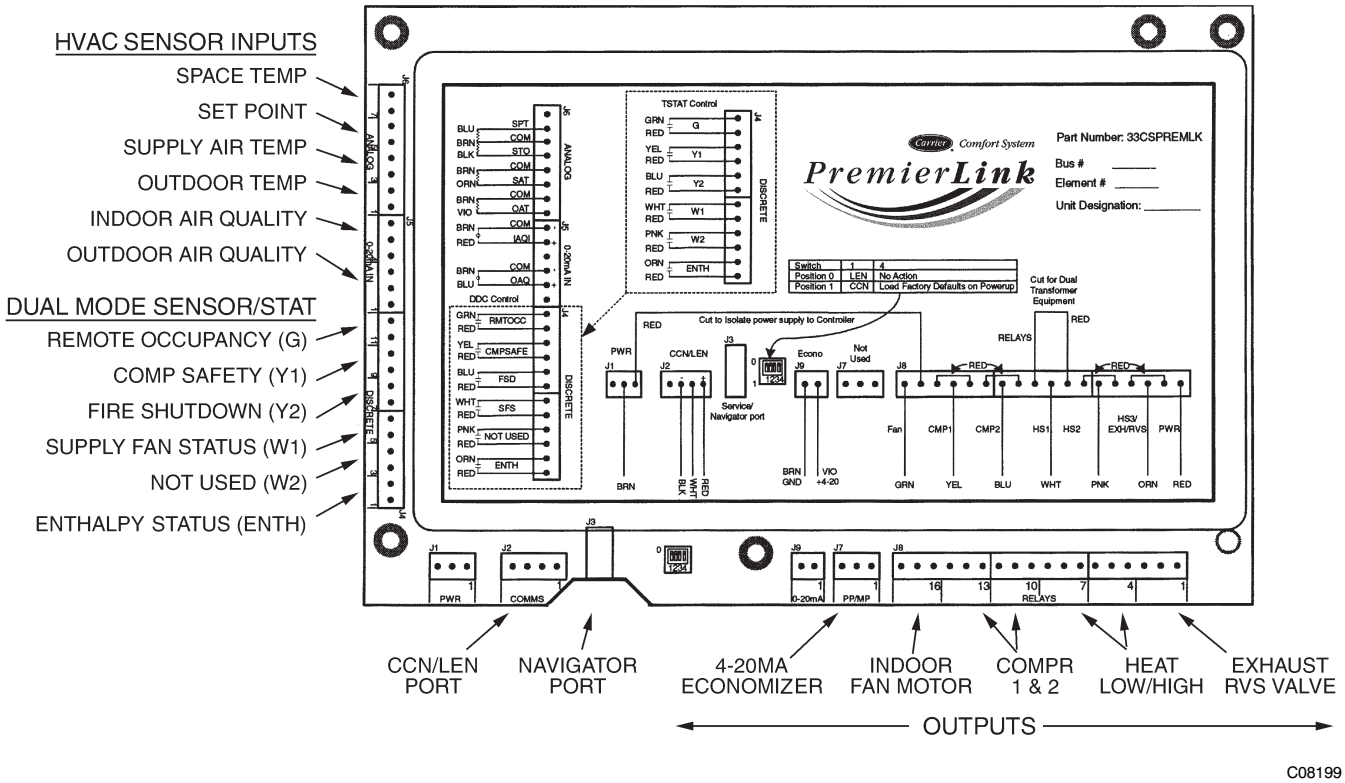

Fig. 44 – PremierLink™ Controller

The PremierLink™ controller (see Fig. 44) is compatible with Carrier Comfort Network® (CCN) devices. This control is designed to allow users the access and ability to change factory–defined settings, thus expanding the function of the standard unit control board. CCN service access tools include System Pilot (TM), Touch Pilot (TM) and Service Tool. (Standard tier display tools Navigator™ and Scrolling Marquee are not suitable for use with latest PremierLink™ controller (Version 2.x).)

The PremierLink™ control is factory–mounted in the 48TC unit's main control box to the left of the LCTB. Factory wiring is completed through harnesses connected to the LCTB thermostat. Field connections are made at a 16–pole terminal block (TB1) located on the bottom shelf of the unit control box in front of the PremierLink™ controller The factory–installed PremierLink™ control includes the supply–air temperature (SAT) sensor. The outdoor air temperature (OAT) sensor is included in the FIOP/accessory EconoMi$er 2 package.

RTU−OPEN CONTROL SYSTEM

The RTU (Roof Top Unit) Open controller is an integrated component of the Carrier rooftop unit. Its internal application programming provides optimum performance and energy efficiency. RTU Open enables the unit to run in 100% stand−alone control mode, Carrier's I−Vu Open network, or a Third Party Building Automation System (BAS). On−board DIP switches allow you to select your protocol (and baud rate) of choice among the four most popular protocols in use today: BACnet, Modbus, Johnson N2 and LonWorks.

The RTU Open control is factory−mounted in the 48TC unit's main control box, to the left of the Light Commercial Terminal Board (LCTB). See Fig. 45. Factory wiring is completed through harnesses connected to the LCTB. Field connections for RTU Open sensors will be made at the Phoenix connectors on the RTU Open board. The factory−installed RTU Open control includes the supply−air temperature (SAT) sensor. The outdoor air temperature (OAT) sensor is included in the FIOP/accessory EconoMi$er2 package.

Sensory/Accessory Installation

There are a variety of sensors and accessories available for the RTU−OPEN. Some of these can be factory or field installed, while others are only field installable. The RTU−OPEN controller may also require connection to a building network system or building zoning system. All field control wiring that connects to the RTU−OPEN must be routed through the raceway built into the corner post of the unit or secured to the unit control box with electrical conduit. The unit raceway provides the UL required clearance between high and low−voltage wiring. Pass the control wires through the hole provided in the corner post, then feed the wires thorough the raceway to the RTU−OPEN. Connect the wires to the removable Phoenix connectors and then reconnect the connectors to the board. See Fig. 45.

IMPORTANT: Refer to the specific sensor or accessory instructions for its proper installation and for rooftop unit installation refer to base unit installation instructions and the unit's wiring diagrams.

⚠ WARNING

ELECTRICAL SHOCK HAZARD

Failure to follow this warning could result in personal injury or death, and/or equipment damage.

Disconnect and lockout/tagout electrical power before wiring the RTU−OPEN controller.

Additional RTU−OPEN Installation and Troubleshooting

Additional installation, wiring and troubleshooting information for the RTU−OPEN Controller can be found in the following manuals: *"Controls, Start−up, Operation and Troubleshooting Instructions,"* and *"RTU Open Installation and Start−up Guide."*

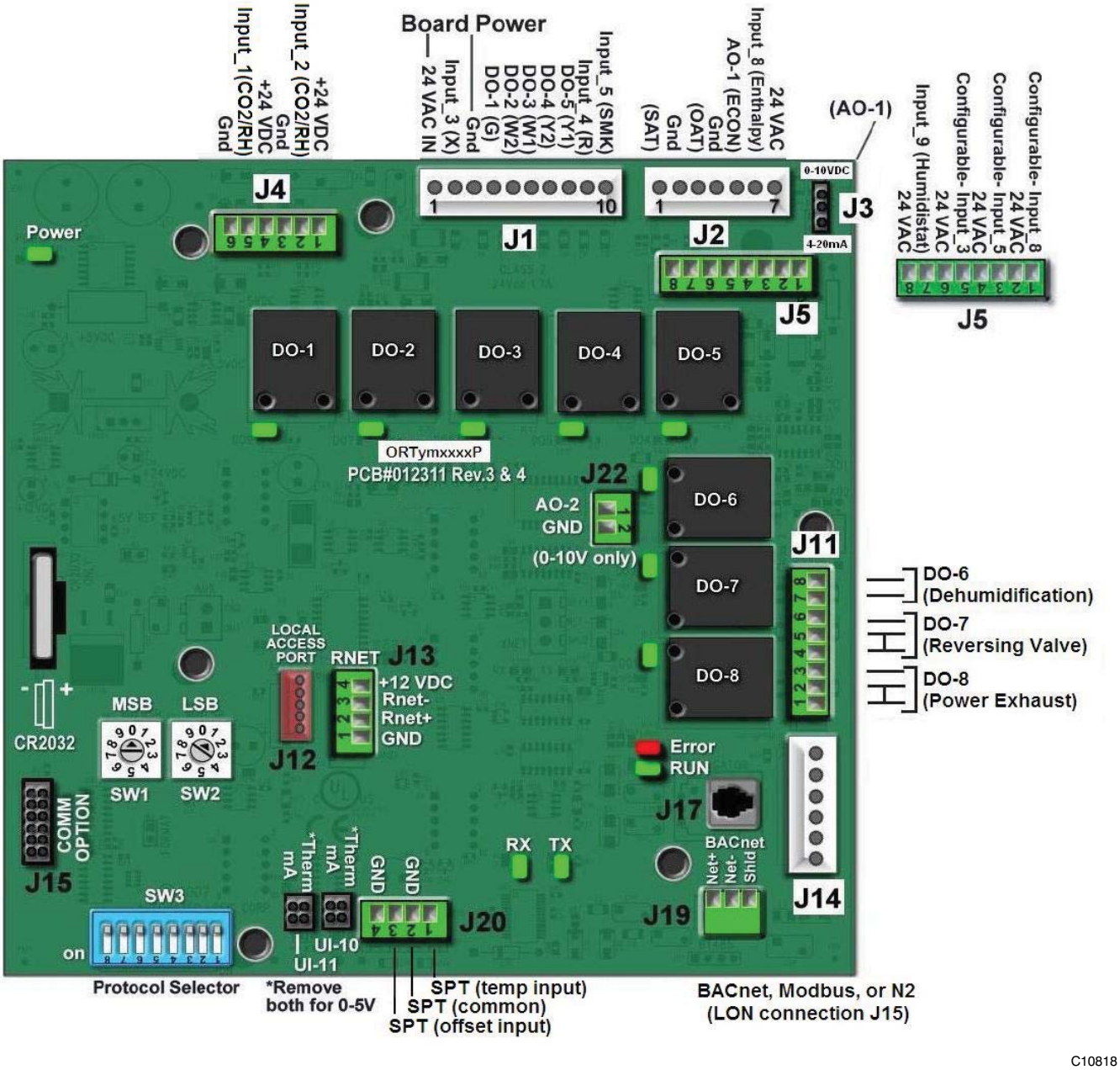

Fig. 45 – RTU–OPEN Control Module

GAS HEATING SYSTEM

General

The heat exchanger system consists of a gas valve feeding multiple inshot burners off a manifold. The burners fire into matching primary tubes. The tubes exit into the collector box, then into the induced draft fan wheel inlet. The induced fan wheel discharges into a flue passage and flue gases exit out a flue hood on the side of the unit. The induced draft fan motor includes a Hall Effect sensor circuit that confirms adequate wheel speed via the Integrated Gas Control (IGC) board. Safety switches include a Rollout Switch mounted at the top of the burner compartment. A limit switch is mounted through the side of the fan deck, over the tubes. The vestibule plate faces the tubes. See Figs. 46 and Fig. 48.

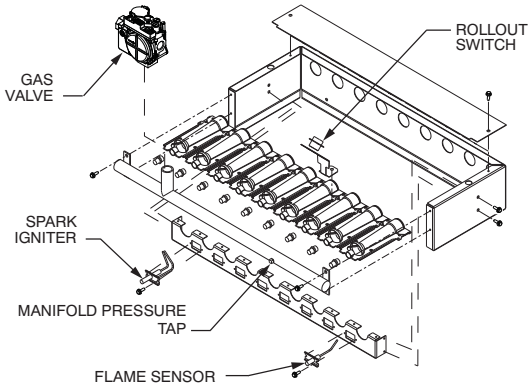

Fig. 46 – Burner Section Details

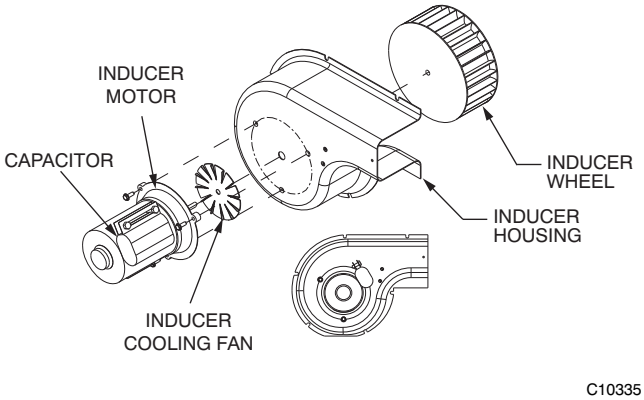

Fig. 47 – Inducer Assembly

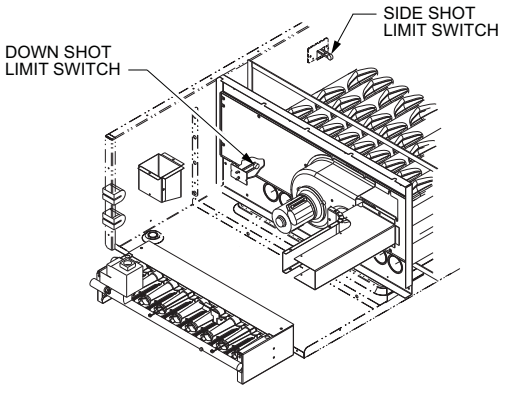

Fig. 48 – Limit Switch Locations

Fuel Types and Pressures

Natural Gas

The 48TC unit is factory−equipped for use with Natural Gas fuel at elevation under 2000 ft (610 m). See section Orifice Replacement for information in modifying this unit for installation at elevations above 2000 ft (610 m).

Gas line pressure entering the unit's main gas valve must be within specified ranges. Adjust unit gas regulator valve as required or consult local gas utility. See Table 8.

Table 8 – Natural Gas Supply Line Pressure Ranges

UNIT MODEL	UNIT SIZE	MIN	MAX
48TC	All	4.0 in. wg (996 Pa)	13.0 in. wg (3240 Pa)

Manifold pressure is factory−adjusted for NG fuel use. Adjust as required to obtain best flame characteristic. See Table 9.

Table 9 – Natural Gas Manifold Pressure Ranges

UNIT MODEL	UNIT SIZE	HIGH FIRE	LOW FIRE	RANGE
48TC	All	3.0 in. wg (747 Pa)	2.0 in. wg (498 Pa)†	Reference MRT unit nameplate for range ratings

Liquid Propane

Accessory packages are available for field−installation that will convert the 48TC unit to operate with Liquid Propane (LP) fuels. These kits include new orifice spuds, new springs for gas valves and a supply line low pressure switch. See section on Orifice Replacement for details on orifice size selections.

Fuel line pressure entering unit gas valve must remain within specified range. See Table 10.

Table 10 – Liquid Propane Supply Line Pressure Ranges

UNIT MODEL	UNIT SIZE	MIN	MAX
48TC	All	11.0 in. wg (2740 Pa)	13.0 in. wg (3240 Pa)

Manifold pressure for LP fuel use must be adjusted to specified range. Follow instructions in the accessory kit to make initial readjustment. See Table 11.

Table 11 – Liquid Propane Manifold Pressure Ranges

UNIT MODEL	UNIT SIZE	HIGH FIRE	LOW FIRE
48TC	All	11.0 in. wg (2740 Pa)	7.3 in. wg (1817 Pa)†

Supply Pressure Switch

The LP conversion kit includes a supply low pressure switch. The switch contacts (from terminal C to terminal NO [Normally Open]) will open the gas valve power whenever the supply line pressure drops below the setpoint. See Fig. 49 and Fig. 50. The switch, HK02LB008, opens contacts on pressure "fail" at 7.2 ±0.70 in. wg. Contacts close on pressure rise above 10.2 in. wg. If the low pressure remains open for 15 minutes during a call for heat, the IGC circuit will initiate an

Ignition Fault (5 flashes) lockout. Reset of the low pressure switch is automatic on rise in supply line pressure. Reset of the IGC requires a recycle of unit power after the low pressure switch has closed.

Limit Switch

Remove the blower access panel. The Limit Switch is located on the fan deck for sideshot units and on the vestibule plate for downshot units. SeeFig 49.

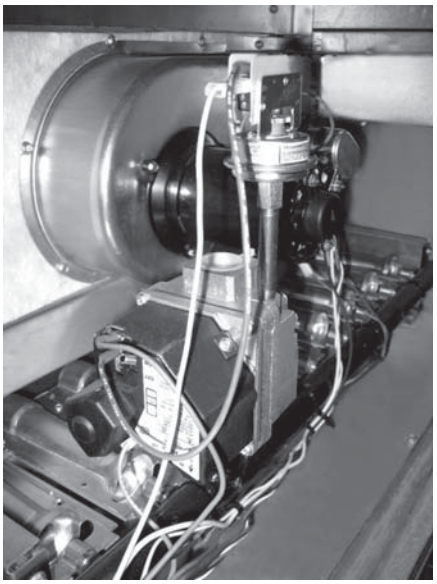

48TC*D08 only

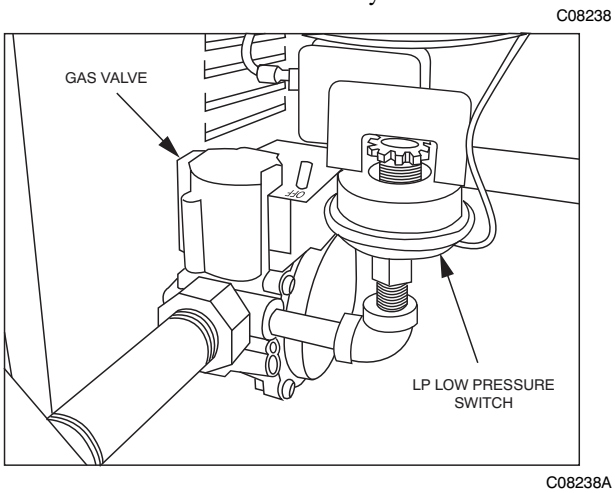

Fig. 49 – LP Low Pressure Switch (Installed)

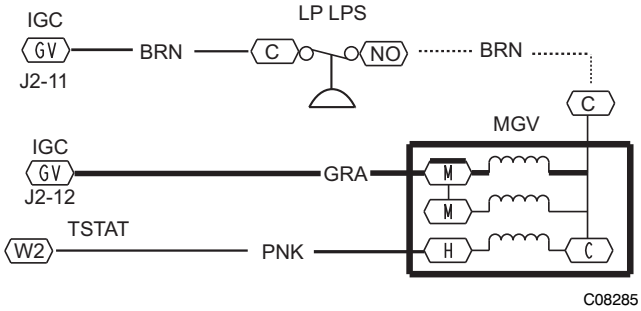

Fig. 50 – LP Supply Line Low Pressure Switch Wiring

This switch also prevents operation when the propane tank level is low which can result in gas with a high concentration of impurities, additives, and residues that have settled to the bottom of the tank. Operation under these conditions can cause harm to the heat exchanger system. Contact your fuel supplier if this condition is suspected.

Flue Gas Passageways

To inspect the flue collector box and upper areas of the heat exchanger:

1. Remove the combustion blower wheel and motor assembly according to directions in the Combustion–Air Blower section. See Fig. 51.
2. Remove the flue cover to inspect the heat exchanger.
3. Clean all surfaces as required using a wire brush.

Combustion–Air Blower

Clean periodically to assure proper airflow and heating efficiency. Inspect the blower wheel every fall and periodically during the heating season. For the first heating season, inspect the blower wheel bi–monthly to determine proper cleaning frequency.

To access the burner section, open the heater access door below the indoor fan panel.

To inspect the blower wheel, shine a flashlight into the draft hood opening. If cleaning is required, remove the motor and wheel as follows:

1. Remove the seven screws attaching the induced–draft motor housing to the vestibule plate. See Fig. 51.
2. The blower wheel can be cleaned at this point. If additional cleaning is required, continue with Steps 3 through 5.
3. Remove the blower from the motor shaft by loosening two setscrews.
4. Remove the motor by removing the four screws that hold the motor to the mounting plate. Remove the motor cooling fan by removing one setscrew.
5. Remove the nuts that hold the motor to the mounting plate.
6. To reinstall, reverse the procedure outlined above.

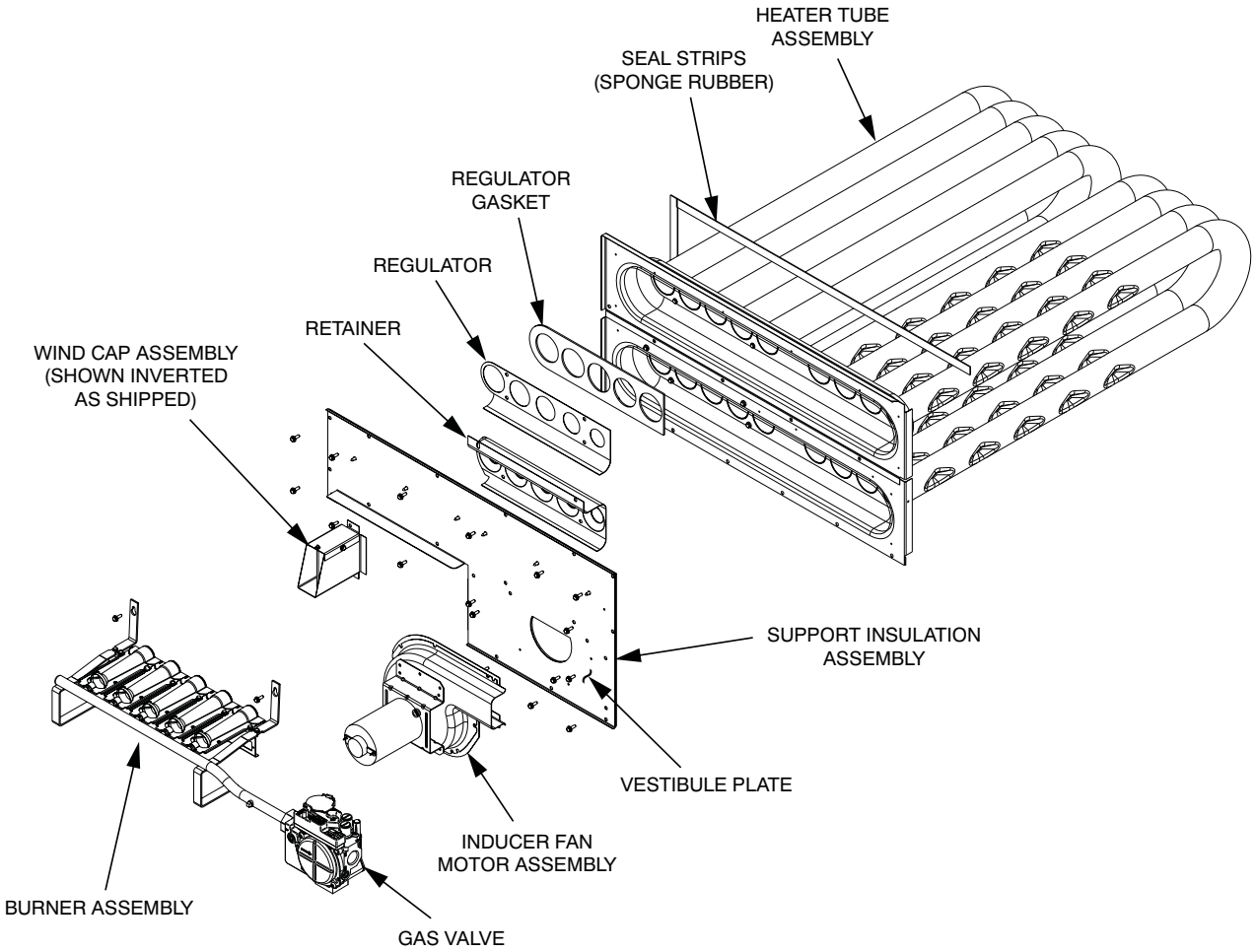

Fig. 51 – Typical Heat Exchanger Assembly

Burners and Igniters

⚠ CAUTION

EQUIPMENT DAMAGE HAZARD

Failure to follow this CAUTION may result in equipment damage.

When working on gas train, do not hit or plug orifice spuds.

Main Burners

To access the burner section, open the heater access door below the indoor fan panel. At the beginning of each heating season, inspect for deterioration or blockage due to corrosion or other causes. Observe the main burner flames and adjust, if necessary. Flames should be conical in shape and enter the heat exchanger tubes with minor impingement on the sheet metal flame components.

Orifice Projection

Refer to Fig. 52 for maximum projection dimension for the orifice face to manifold tube.

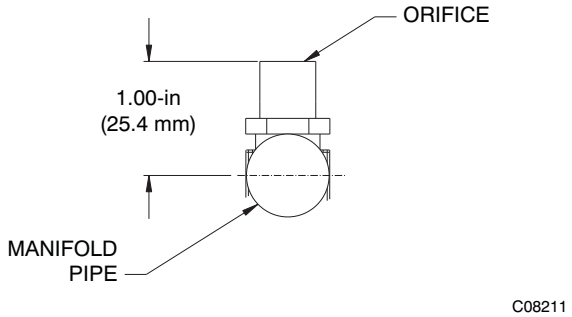

Fig. 52 – Orifice Projection

Removal and Replacement of Gas Train

See Fig. 46, Fig. 51 and Fig. 53.

1. Shut off the gas using the manual shutoff switch located in the gas supply line.
2. Turn the gas valve ON/OFF knob to the OFF position.

⚠ WARNING

PERSONAL INJURY HAZARD

Failure to follow this WARNING can result in personal injury.

Disconnect all electrical power when servicing the fan motor. Apply appropriate lockout/tagout procedures.

3. Shut off power to the unit and install a lockout tag..
4. Disconnect the gas piping at the unit gas valve.
5. Remove the wires connected to the gas valve. Mark each wire to assist in reconnecting power to the gas valve.
6. Remove the igniter wires and sensor wires at the Integrated Gas Unit Controller (IGC). See Fig. 55.
7. Remove the 2 screws that attach the burner rack to the vestibule plate. See Fig. 53.

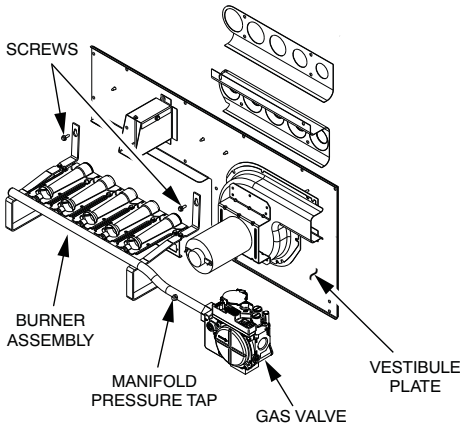

C12594

Fig. 53 – Burner Assembly Removal

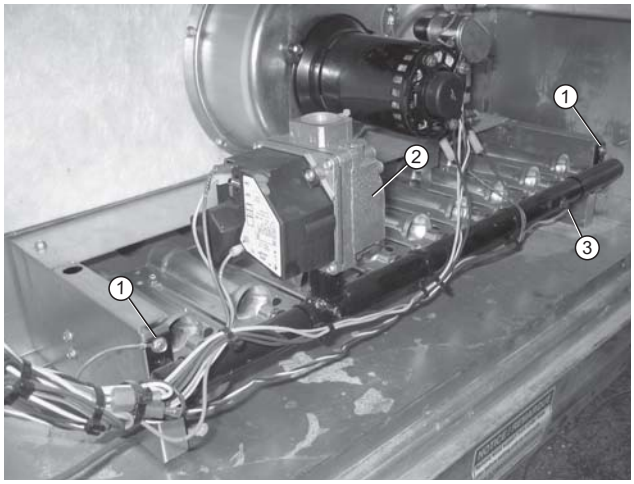

C09395

Item No.	Description
1	Gas manifold mounting screws (qty 2)
2	Gas valve inlet plug
3	Propane conversion label (apply label where indicated)
4	Gas manifold pressure tap

Fig. 54 – Burner Tray Details

8. Slide the burner tray out of the unit (Fig. 54).
9. To reinstall, reverse the procedure outlined above.

Cleaning and Adjustment

1. Remove the burner rack from the unit as described in the Removal and Replacement of Gas Train section.
2. Inspect the burners; if dirty, remove the burners from rack. (Mark each burner to identify its position before removing from the rack.)
3. Use a soft brush to clean the burners and cross–over port as required.
4. Adjust the spark gap. The gap should be 0.12 – 0.14″ (3.06 – 3.60 mm) and spaced 0.18″ (4.60 mm) from the end of the burner. (See Fig. 57)
5. If the factory orifice has been removed, check that each orifice is tight at its threads into the manifold pipe and the orifice projection does not exceed the maximum valve. See Fig. 52.
6. Reinstall burners on rack in the same locations as they were installed at the factory. The outside cross-over flame regions of the outermost burners are pinched off to prevent excessive gas flow from the side of the burner assembly. If the pinched crossovers are installed between two burners, the flame will not ignite properly.
7. Reinstall the burner rack as described in the Removal and Replacement of Gas Train section.

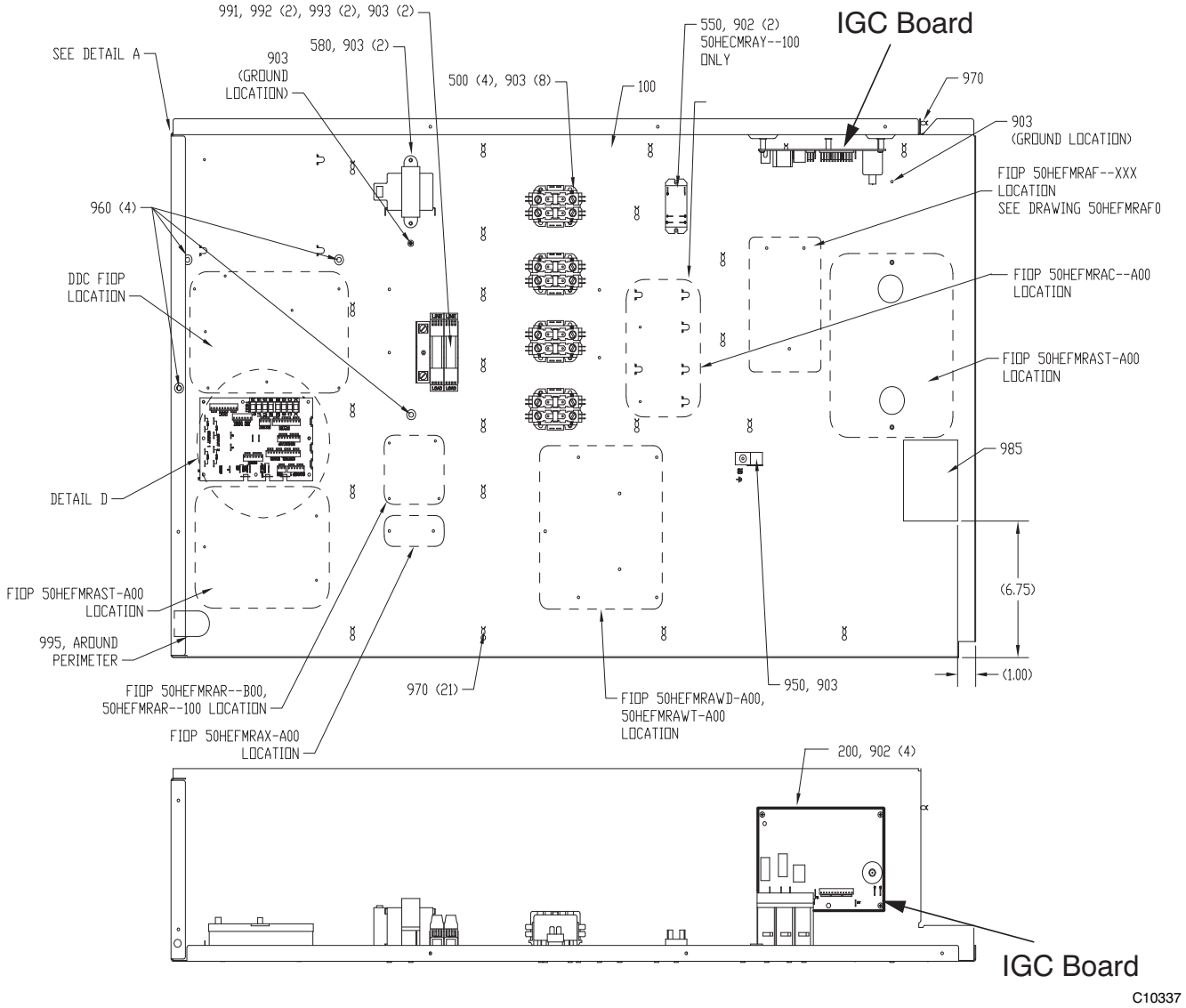

Fig. 55 – Unit Control Box/IGC Location

Gas Valve

All unit sizesare equipped with 2–stage gas valves. See Fig. 56 for locations of adjustment screws and features.

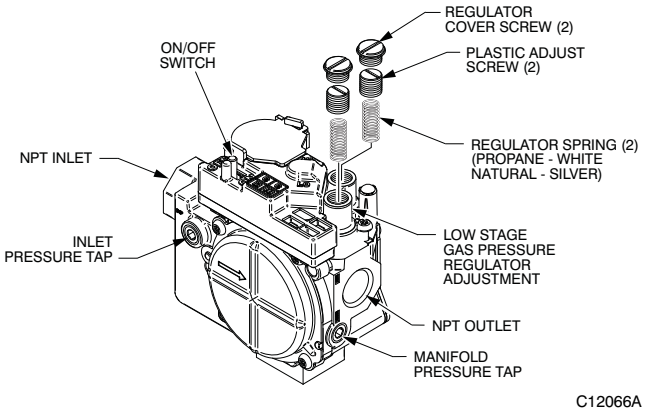

Fig. 56 – Gas Valve

Adjusting Gas Valve Pressure Settings

IMPORTANT: Leak check (using a mixture of soapy water or leak detection fluid) all gas connections including the main service connection, gas valve, gas spuds, and manifold pipe plug. All leaks must be repaired before firing the unit.

Check Unit Operation and Make Necessary Adjustments

NOTE: Gas supply pressure at the gas valve inlet must be within specified ranges for the fuel type and unit size. See Tables 8, 9, 10, and 11.

1. Shut off all electrical power supply to the unit and install a lockout tag.
2. Close the manual gas shutoff valve located on the gas supply line.
3. Remove the manifold pressure tap plug from the manifold and connect a pressure gauge or manometer. See Fig. 54.
4. Turn on the electrical supply.

5. Open the manual shutoff valve, then turn on the unit main gas valve.
6. Set the room thermostat to call for heat. Verify high–stage heat operation before attempting to adjust the manifold pressure.
7. When the main burners ignite, check all fittings, manifold, and orifices for leaks.
8. Adjust the high–stage pressure to the specified setting by turning the plastic adjustment screw clockwise to increase pressure, and counterclockwise to decrease pressure.
9. Set the room thermostat to call for low–stage heat. Adjust the low–stage pressure to the specified setting.
10. Replace the regulator cover screw(s) when finished.
11. With the burner access panel removed, observe the unit heating operation in both high stage and low stage operation. Observe the burner flames to see if they are blue in appearance, and that the flames are approximately the same for each burner.
12. Turn off the unit, remove the pressure manometer and replace the 1/8 in. pipe fitting on the gas manifold. See Fig. 54.

Burner Ignition

The unit is equipped with a direct spark ignition 100% lockout system. An Integrated Gas Unit Controller (IGC) is located in the control box. See Fig. 55. The IGC contains a self–diagnostic LED (light–emitting diode). A single LED (see Fig. 59) on the IGC provides a visual display of operational or sequential problems when the power supply is uninterrupted. When a break in power occurs, the IGC will be reset, resulting in a loss of fault history, and the indoor (evaporator) fan ON/OFF times will be reset. The LED error code can be observed through the viewport. During servicing, refer to the label on the control box cover or Table 12 for an explanation of LED error code descriptions.

IMORTANT: Refer to the Troubleshooting Tables 17 and 18 for additional information.

If lockout occurs, unit may be reset by interrupting power supply to unit for at least 5 seconds.

Table 12 – LED Error Code Description*

LED INDICATION	ERROR CODE DESCRIPTION
ON	Normal Operation
OFF	Hardware Failure
2 Flashes	Limit Switch Fault
3 Flashes	Flame Sense Fault
4 Flashes	4 Consecutive Limit Switch Faults
5 Flashes	Ignition Lockout Fault
6 Flashes	Induced–Draft Motor Fault
7 Flashes	Rollout Switch Fault
8 Flashes	Internal Control Fault
9 Flashes	Software Lockout

LEGEND
LED – Light Emitting Diode
* . A 3–second pause exists between LED error code flashes. If more than one error code exists, all applicable codes will be displayed in numerical sequence.

Orifice Replacement

This unit uses orifice type LH32RFnnn (where nnn indicates orifice reference size). When replacing unit orifices, order the necessary parts through the Carrier Replacement Components Division (RCD). See Table 13 for available orifice sizes. See Tables 15 and 16 for orifice sizes for Natural Gas and LP fuel usage at various elevations above sea level. Never drill or plug orifices for operation.

Check that each replacement orifice is tight at its threads into the manifold pipe and that orifice projection does not exceed maximum value. See Fig. 52.

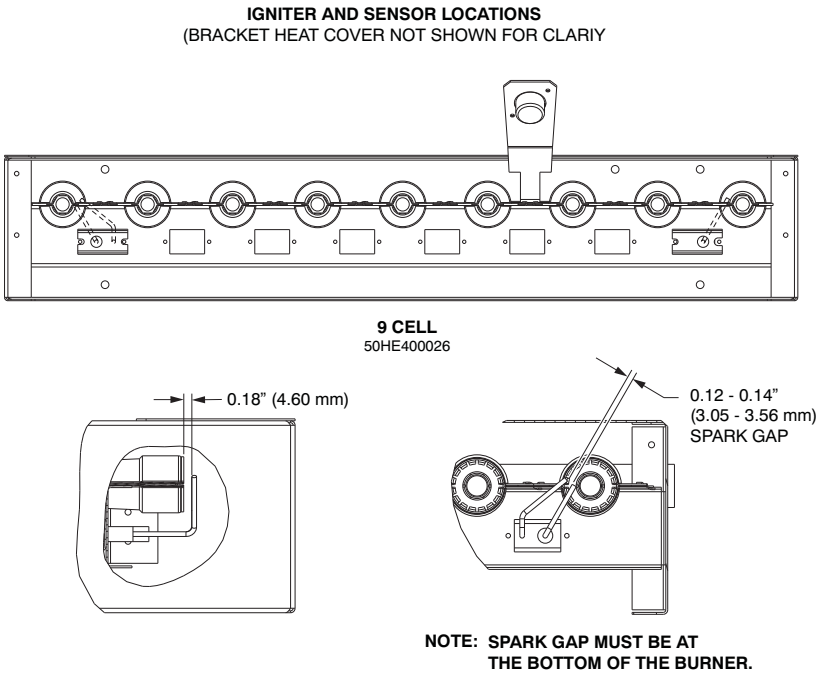

Fig. 57 – Typical MRT Spark Adjustment

Table 13 – Orifice Sizes

ORIFICE DRILL SIZE	CARRIER PART NMBR	DRILL DIA. (in.)
#30	LH32RF129	0.1285
1/8	LH32RF125	0.1250
#31	LH32RF120	0.1200
#32	LH32RF116	0.1160
#33	LH32RF113	0.1130
#34	LH32RF111	0.1110
#35	LH32RF110	0.1100
#36	LH32RF105	0.1065
#37	LH32RF104	0.1040
#38	LH32RF102	0.1015
#39	LH32RF103	0.0995
#40	LH32RF098	0.0980
#41	LH32RF096	0.0960
#42	LH32RF094	0.0935
#43	LH32RF089	0.0890
#44	LH32RF086	0.0860
#45	LH32RF082	0.0820
#46	LH32RF080	0.0810
#47	LH32RF079	0.0785
#48	LH32RF076	0.0760
#49	LH32RF073	0.0730
#50	LH32RF070	0.0700
#51	LH32RF067	0.0670
#52	LH32RF065	0.0635
#53	LH32RF060	0.0595
#54	LH32RF055	0.0550
#55	LH32RF052	0.0520
#56	LH32RF047	0.0465
#57	LH32RF043	0.0430
#58	LH32RF042	0.0420

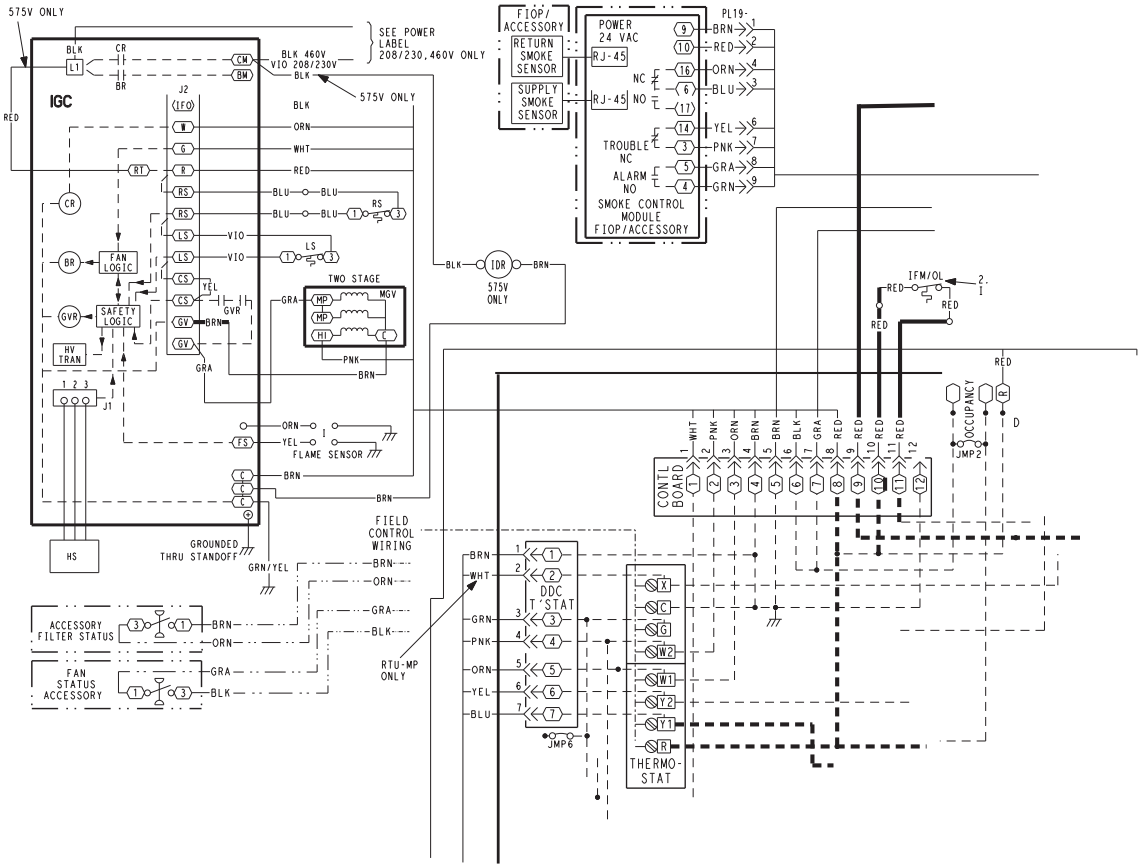

C10339

Fig. 58 – Typical IGC Wiring Diagram

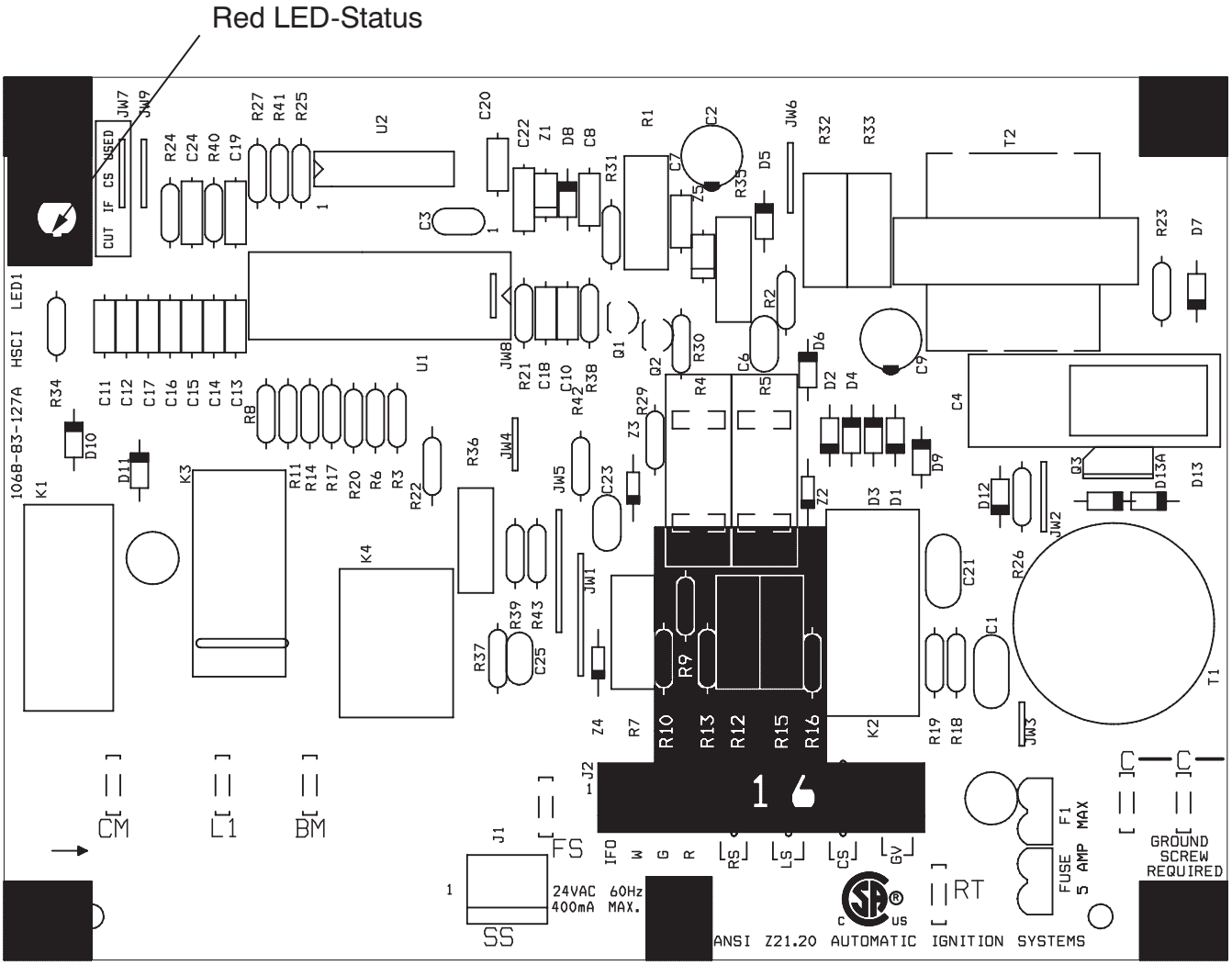

Fig. 59 – Integrated Gas Control (IGC) Board

Table 14 – IGC Connections

TERMINAL LABEL	POINT DESCRIPTION	SENSOR LOCATION	TYPE OF I/O	CONNECTION PIN NUMBER
INPUTS				
RT, C	Input power from TRAN 1	control box	24 VAC	—
SS	Speed sensor	gas section	analog input	J1, 1-3
FS, T1	Flame sensor	gas section	switch input	—
W	Heat stage 1	LCTB	24 VAC	J2, 2
RS	Rollout switch	gas section	switch input	J2, 5-6
LS	Limit switch	fan section	switch input	J2, 7-8
CS	Centrifugal switch (not used)	—	switch input	J2, 9-10
OUTPUTS				
L1, CM	Induced draft combustion motor	gas section	line VAC	
IFO	Indoor fan	control box	relay	J2, 1
GV	Gas valve (heat stage 1)	gas section	relay	J2, 11-12

Table 15 – Altitude Compensation* (17 – 30) – Natural Gas

NATURAL GAS		NOMINAL HEAT INPUT					
ELEVATION		220k BTUH		310k BTUH		400k BTUH	
Feet	Meters	Orifice Size	Input (btu/hr)	Orifice Size	Input (btu/hr)	Orifice Size	Input (btu/hr)
0 – 2000	0–610	30	220,000	30	310,000	30	400,000
2000	610	30	202,400	30	285,200	30	368,000
3000	914	31[1]	193,600	31[1]	272,800	31[1]	352,000
4000	1219	31[1]	184,800	31[1]	260,400	31[1]	336,000
5000	1524	31[1]	176,000	31[1]	248,000	31[1]	320,000
6000	1829	31[1]	167,200	31[1]	235,600	31[1]	304,000
7000	2134	32[1]	158,400	32[1]	223,200	32[1]	288,000
8000	2438	32[1]	149,600	32[1]	210,800	32[1]	272,000
9000	2743	34[1]	140,800	34[1]	198,400	34[1]	256,000
10000	3048	35[2]	132,000	35[1]	186,000	35[1]	240,000
11000	3353	37[2]	123,200	37[2]	173,600	37[2]	224,000
12000	3658	37[2]	114,400	37[2]	161,200	37[2]	208,000
13000	3962	39[2]	105,600	39[2]	148,800	39[2]	192,000
14000	4267	39[2]	96,800	39[2]	136,400	39[2]	176,000

Table 16 – Altitude Compensation* (17 – 30) – Propane Gas

PROPANE GAS		NOMINAL HEAT INPUT					
ELEVATION		220k BTUH		310k BTUH		400k BTUH	
Feet	Meters	Orifice Size	Input (btu/hr)	Orifice Size	Input (btu/hr)	Orifice Size	Input (btu/hr)
0 – 2000	0–610	48[5]	220,000	48[5]	310,000	48[5]	400,000
2000	610	49[3]	202,400	49[3]	285,200	49[3]	368,000
3000	914	49[3]	193,600	49[3]	272,800	49[3]	352,000
4000	1219	49[3]	184,800	49[3]	260,400	49[3]	336,000
5000	1524	50[3]	176,000	50[3]	248,000	50[3]	320,000
6000	1829	50[3]	167,200	50[3]	235,600	50[3]	304,000
7000	2134	50[3]	158,400	50[3]	223,200	50[3]	288,000
8000	2438	51[3]	149,600	51[3]	210,800	51[3]	272,000
9000	2743	51[3]	140,800	51[3]	198,400	51[3]	256,000
10000	3048	52[4]	132,000	52[4]	186,000	52[4]	240,000
11000	3353	52[4]	123,200	52[4]	173,600	52[4]	224,000
12000	3658	53[4]	114,400	53[4]	161,200	53[4]	208,000
13000	3962	53[4]	105,600	53[4]	148,800	53[4]	192,000
14000	4267	53[4]	96,800	53[4]	136,400	53[4]	176,000

* As the height above sea level increases, there is less oxygen per cubic ft. of air. Therefore, heat input rate should be reduced at higher altitudes.

XX[1] = CRNGELEV001A00
XX[2] = CRNGELEV002A00
XX[3] = CRLPELEV006A00
XX[4] = CRLPELEV006A00
XX[5] = CRLPKIT9001A00

Minimum heating entering air temperature

When operating on first stage heating, the minimum temperature of air entering the dimpled heat exchanger is 50°F (10°C) continuous and 45°F (7°C) intermittent for standard heat exchangers and 40°F (4°C) continuous and 35°F (2°C) intermittent for stainless steel heat exchangers. To operate at lower mixed–air temperatures, a field–supplied outdoor–air thermostat must be used to initiate both stages of heat when the temperature is below the minimum required temperature to ensure full fire operation. Wire the outdoor–air thermostat OALT (part no. HH22AG106) in series with the second stage gas valve. See Fig. 60. Set the outdoor–air thermostat at 35°F (2°C) for stainless steel heat exchangers or 45°F (4°C) for standard heat exchangers. This temperature setting will bring on the second stage of heat whenever the ambient temperature is below the thermostat setpoint. Indoor comfort can be compromised when heating is initiated using low entering air temperatures with insufficient heating temperature rise.

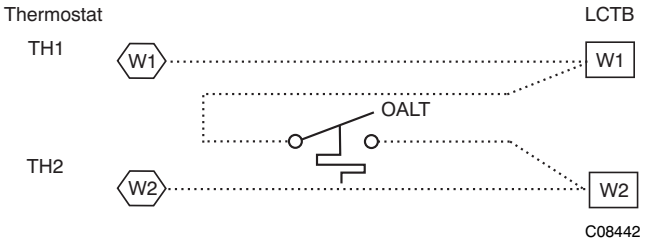

Fig. 60 – OATL Connections

Troubleshooting Heating System

Refer to Tables 17 and 18 for additional troubleshooting topics.

Table 17 – Heating Service Troubleshooting

PROBLEM	CAUSE	REMEDY
Burners Will Not Ignite.	Misaligned spark electrodes.	Check flame ignition and sensor electrode positioning. Adjust as needed.
	No gas at main burners.	Check gas line for air, purge as necessary. After purging gas line of air, allow gas to dissipate for at least 5 minutes before attempting to relight unit.
		Check gas valve.
	Water in gas line.	Drain water and install drip leg to trap water.
	No power to furnace.	Check power supply, fuses, wiring, and circuit breaker.
	No 24V power supply to control circuit.	Check transformer. Transformers with internal overcurrent protection require a cool down period before resetting.
	Miswired or loose connections.	Check all wiring and wire nut connections.
	Burned–out heat anticipator in thermostat.	Replace thermostat.
	Broken thermostat wires.	Run continuity check. Replace wires, if necessary.
Inadequate Heating.	Dirty air filter.	Clean or replace filter as necessary.
	Gas input to unit too low.	Check gas pressure at manifold. Clock gas meter for input. If too low, increase manifold pressure, or replace with correct orifices.
	Unit undersized for application.	Replace with proper unit or add additional unit.
	Restricted airflow.	Clean filter, replace filter, or remove any restrictions.
	Blower speed too low.	Use high speed tap, increase fan speed, or install optional blower, as suitable for individual units.
	Limit switch cycles main burners.	Check rotation of blower, thermostat heat anticipator settings, and temperature rise of unit. Adjust as needed.
	Too much outdoor air.	Adjust minimum position.
		Check economizer operation.
Poor Flame Characteristics.	Incomplete combustion (lack of combustion air) results in: Aldehyde odors, CO, sooting flame, or floating flame.	Check all screws around flue outlets and burner compartment. Tighten as necessary.
		Cracked heat exchanger.
		Overfired unit — reduce input, change orifices, or adjust gas line or manifold pressure.
		Check vent for restriction. Clean as necessary.
		Check orifice to burner alignment.
Burners Will Not Turn Off.	Unit is locked into Heating mode for a one minute minimum.	Wait until mandatory one–minute time period has elapsed or reset power to unit.

Table 18 – IGC Board LED Alarm Codes

LED FLASH CODE	DESCRIPTION	ACTION TAKEN BY CONTROL	RESET METHOD	PROBABLE CAUSE
On	Normal Operation	—	—	—
Off	Hardware Failure	No gas heating.	—	Loss of power to the IGC. Check 5 amp fuse on IGC, power to unit, 24V circuit breaker, transformer, and wiring to the IGC.
2 Flashes	Limit Switch Fault	Gas valve and igniter Off. Indoor fan and inducer On.	Limit switch closed, or heat call (W) Off.	High temperature limit switch is open. Check the operation of the indoor (evaporator) fan motor. Ensure that the supply-air temperature rise is within the range on the unit nameplate. Check wiring and limit switch operation. Check/clean return air filters. Check burner assembly manifold pressure to ensure proper firing rate.
3 Flashes	Flame Sense Fault	Indoor fan and inducer On.	Flame sense normal. Power reset for LED reset.	The IGC sensed a flame when the gas valve should be closed. The minimum flame sensing microamps is 0.5 mA. Check wiring, flame sensor, and gas valve operation.
4 Flashes	Four Consecutive Limit Switch Fault	No gas heating.	Heat call (W) Off. Power reset for LED reset.	4 consecutive limit switch faults within a single call for heat. See Limit Switch Fault.
5 Flashes	Ignition Fault	No gas heating.	Heat call (W) Off. Power reset for LED reset.	Unit unsuccessfully attempted ignition for 15 minutes. Check igniter and flame sensor electrode spacing, gaps, etc. Check flame sense and igniter wiring. Check gas valve operation and gas supply.
6 Flashes	Induced Draft Motor Fault	If heat off: no gas heating. If heat on: gas valve Off and inducer On.	Inducer sense normal, or heat call (W) Off.	Inducer sense On when heat call Off, or inducer sense Off when heat call On. Check wiring, voltage, and operation of IGC motor. Check speed sensor wiring to IGC. Check to ensure Hall Effect wires are not rubbing against cabinet sheet metal.
7 Flashes	Rollout Switch Lockout	Gas valve and igniter Off. Indoor fan and inducer On.	Power reset.	Rollout switch has opened. Check gas valve operation. Check induced-draft blower wheel is properly secured to motor shaft.
8 Flashes	Internal Control Lockout	No gas heating.	Power reset.	IGC has sensed internal hardware or software error. If fault is not cleared by resetting 24V power, replace the IGC. Check gas valve connections to IGC terminals. BRN lead must be on Pin 11. Check that W1, W2, and Com are correctly connected to the gas valve terminals.
9 Flashes	Temporary Software Lockout	No gas heating.	1 hour auto reset, or power reset.	Electrical interference is disrupting the IGC software.

LEGEND
IGC – Integrated Gas Unit Control
LED – Light–Emitting Diode
NOTES:

1. There is a 3–second pause between alarm code displays.
2. If more than one alarm code exists, all applicable alarm codes will be displayed in numerical sequence.
3. Alarm codes on the IGC will be lost if power to the unit is interrupted.

ECONOMI$ER SYSTEMS

IMPORTANT: Any economizer that meets the economizer requirements as laid out in California's Title 24 mandatory section 120.2 (fault detection and diagnostics) and/or prescriptive section 140.4 (life−cycle tests, damper leakage, 5 year warranty, sensor accuracy, etc), will have a label on the economizer. Any economizer without this label does not meet California's Title 24. The five−year limited parts warranty referred to in section 140.4 only applies to factory installed economizers. Please refer to your economizer on your unit.

The 48TC units may be equipped with a factory−installed or accessory (field−installed) EconoMi$er system. Two types are available: with a logic control system (EconoMi$er IV) and without (EconoMi$er2). See Fig. 61 for component locations on each type. See Fig. 62 and Fig. 63 for EconoMi$er section wiring diagrams. Both EconoMi$ers use direct−drive damper actuators.

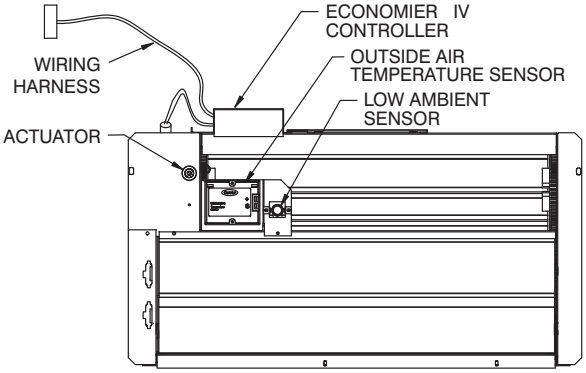

EconoMi$er IV

C06021

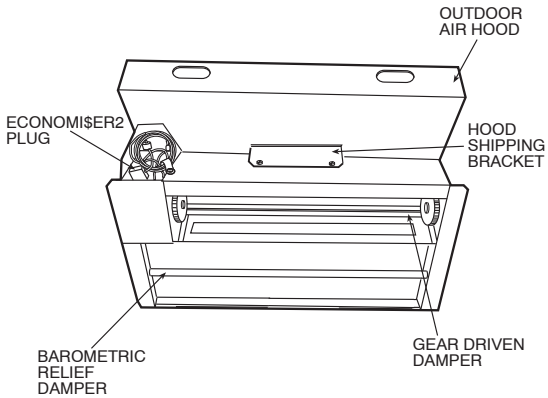

EconoMi$er2

C06022

Fig. 61 − EconoMi$er Component Locations

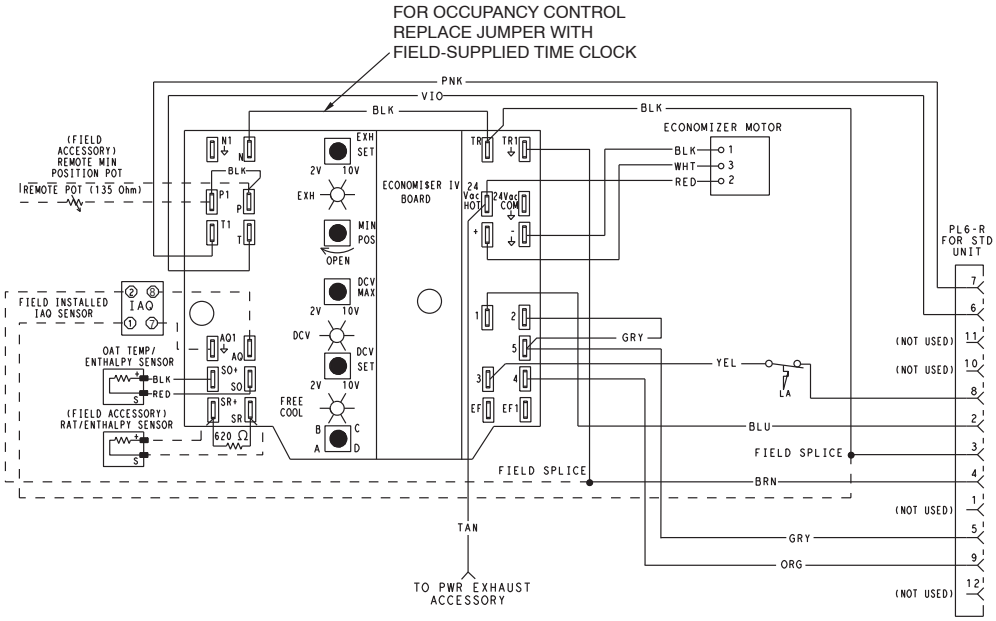

LEGEND

DCV— Demand Controlled Ventilation
IAQ — Indoor Air Quality
LA — Low Ambient Lockout Device
OAT — Outdoor-Air Temperature
POT — Potentiometer
RAT — Return-Air Temperature

Potentiometer Defaults Settings:

Power Exhaust	Middle
Minimum Pos.	Fully Closed
DCV Max.	Middle
DCV Set	Middle
Enthalpy	C Setting

NOTES:
1. 620 ohm, 1 watt 5% resistor should be removed only when using differential enthalpy or dry bulb.
2. If a separate field-supplied 24 v transformer is used for the IAQ sensor power supply, it cannot have the secondary of the transformer grounded.
3. For field-installed remote minimum position POT, remove black wire jumper between P and P1 and set control minimum position POT to the minimum position.

C06028

Fig. 62 − EconoMi$er IV Wiring

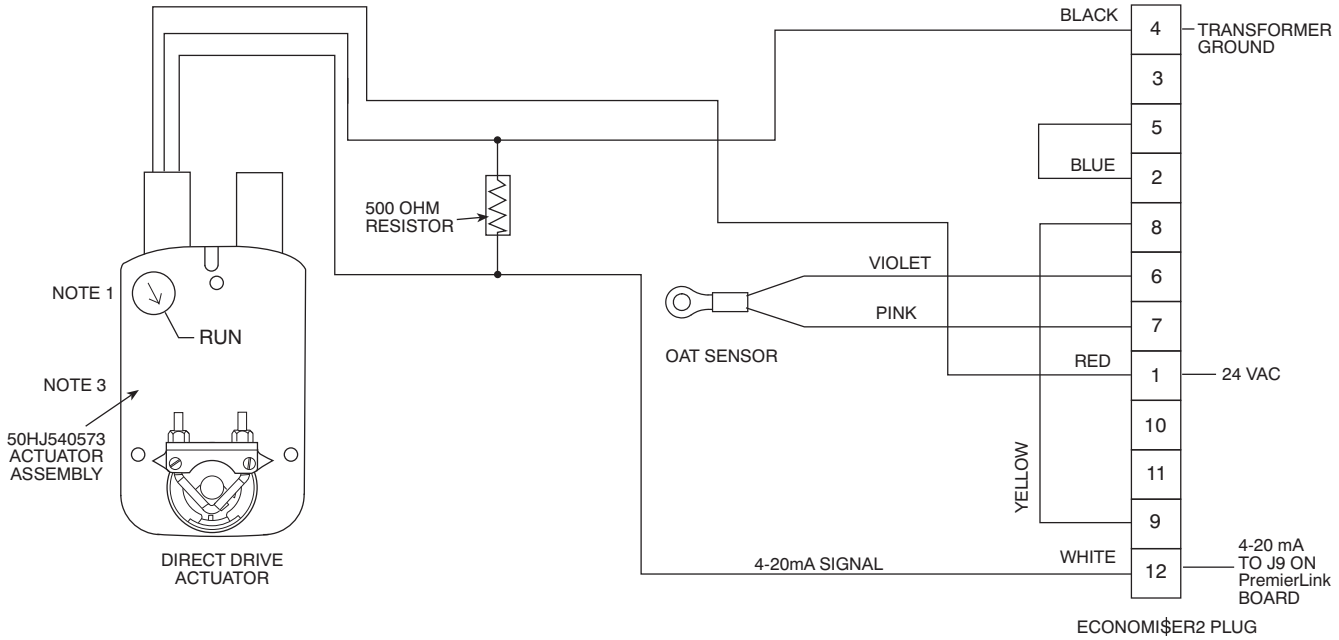

NOTES:
1. Switch on actuator must be in run position for economizer to operate.
2. PremierLink™ control requires that the standard 50HJ540569 outside-air sensor be replaced by either the CROASENR001A00 dry bulb sen sor or HH57A077 enthalpy sensor.
3. 50HJ540573 actuator consists of the 50HJ540567 actuator and a harness with 500-ohm resistor.

C08310

Fig. 63 – EconoMi$er2 with 4 to 20 mA Control Wiring

Table 19 – EconoMi$er IV Input/Output Logic

INPUTS					OUTPUTS			
Demand Control Ventilation (DCV)	Enthalpy*		Y1	Y2	Compressor		N Terminal†	
	Outdoor	Return			Stage 1	Stage 2	Occupied	Unoccupied
							Damper	
Below set (DCV LED Off)	High (Free Cooling LED Off)	Low	On	On	On	On	Minimum position	Closed
			On	Off	On	Off		
			Off	Off	Off	Off		
	Low (Free Cooling LED On)	High	On	On	On	Off	Modulating** (between min. position and full-open)	Modulating** (between closed and full-open)
			On	Off	Off	Off		
			Off	Off	Off	Off	Minimum position	Closed
Above set (DCV LED On)	High (Free Cooling LED Off)	Low	On	On	On	On	Modulating†† (between min. position and DCV maximum)	Modulating†† (between closed and DCV maximum)
			On	Off	On	Off		
			Off	Off	Off	Off		
	Low (Free Cooling LED On)	High	On	On	On	Off	Modulating***	Modulating†††
			On	Off	Off	Off		
			Off	Off	Off	Off		

* For single enthalpy control, the module compares outdoor enthalpy to the ABCD setpoint.
† Power at N terminal determines Occupied/Unoccupied setting: 24 vac (Occupied), no power (Unoccupied).
** Modulation is based on the supply-air sensor signal.
†† Modulation is based on the DCV signal.
*** Modulation is based on the greater of DCV and supply-air sensor signals, between minimum position and either maximum position (DCV) or fully open (supply-air signal).
††† Modulation is based on the greater of DCV and supply-air sensor signals, between closed and either maximum position (DCV) or fully open (supply-air signal).

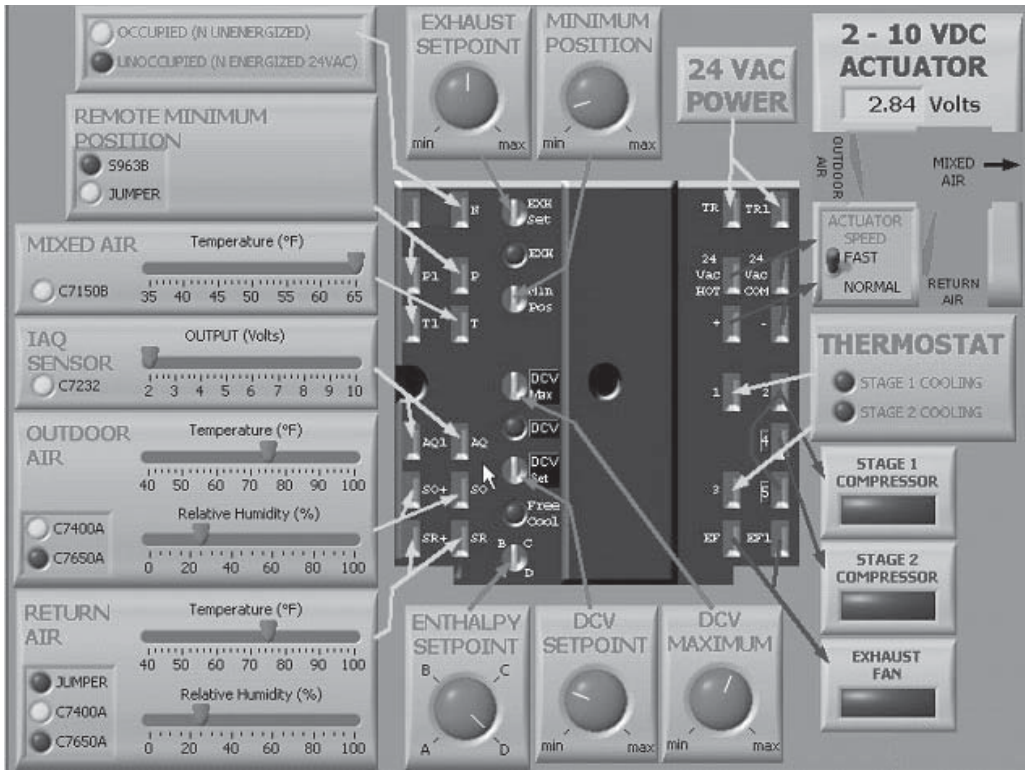

C06053

Fig. 64 – EconoMi$er IV Functional View

EconoMi$er IV Standard Sensors

Table 19 provides a summary of the EconoMi$er IV Input/Output logic. A functional view of the EconoMi$er is shown in Fig. 64. Typical settings, sensor ranges, and jumper positions are also shown. An EconoMi$er IV simulator program is available to help with EconoMi$er IV training and troubleshooting.

Outdoor Air Temperature (OAT) Sensor

The outdoor air temperature sensor (HH57AC074) is a 10 to 20 mA device used to measure the outdoor-air temperature. The outdoor-air temperature is used to determine when the EconoMi$er IV can be used for free cooling. The sensor is factory-installed on the EconoMi$er IV in the outdoor airstream. See Fig. 65. The operating range of temperature measurement is 40° to 100°F (4° to 38°C). See Fig. 67.

Supply Air Temperature (SAT) Sensor

The supply air temperature sensor is a 3K thermistor located at the inlet of the indoor fan. See Fig. 65. This sensor is factory installed. The operating range of temperature measurement is 0° to 158°F (–18° to 70°C). See Table 65 for sensor temperature/resistance values.

The temperature sensor looks like an eyelet terminal with wires running to it. The sensor is located in the "crimp end" and is sealed from moisture.

Outdoor Air Lockout Sensor

The EconoMi$er IV is equipped with an ambient temperature lockout switch located in the outdoor airstream which is used to lock out the compressors below a 42°F (6°C) ambient temperature. See Fig. 61.

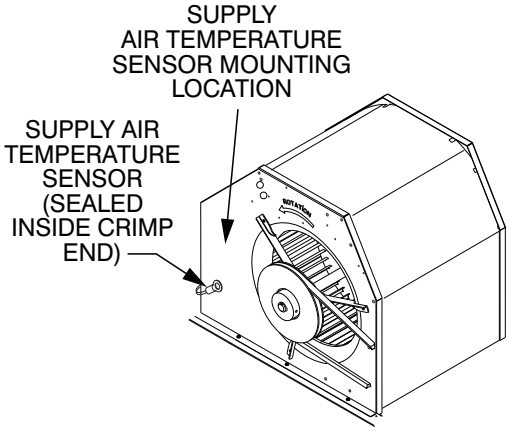

C06033

Fig. 65 – Supply Air Sensor Location

EconoMi$er IV Control Modes

IMPORTANT: The optional EconoMi$er2 does not include a controller. The EconoMi$er2 is operated by a 4 to 20 mA signal from an existing field-supplied controller. See Fig. 63 for wiring information.

Determine the EconoMi$er IV control mode before set up of the control. Some modes of operation may require different sensors. The EconoMi$er IV is supplied from the factory with a supply–air temperature sensor and an outdoor– air temperature sensor. This allows for operation of the EconoMi$er IV with outdoor air dry bulb changeover control. Additional accessories can be added to allow for different types of changeover control and operation of the EconoMi$er IV and unit. See Table 20.

Outdoor Dry Bulb Changeover

The standard controller is shipped from the factory configured for outdoor dry bulb changeover control. The outdoor air and supply air temperature sensors are included as standard. For this control mode, the outdoor temperature is compared to an adjustable setpoint selected on the control. If the outdoor-air temperature is above the setpoint, the EconoMi$er IV will adjust the outside air dampers to minimum position. If the outdoor-air temperature is below the setpoint, the position of the outside air dampers will be controlled to provided free cooling using outdoor air. When in this mode, the LED next to the free cooling setpoint potentiometer will be on. The changeover temperature setpoint is controlled by the free cooling setpoint potentiometer located on the control. See Fig. 66. The scale on the potentiometer is A, B, C, and D. See Fig. 67 for the corresponding temperature changeover values.

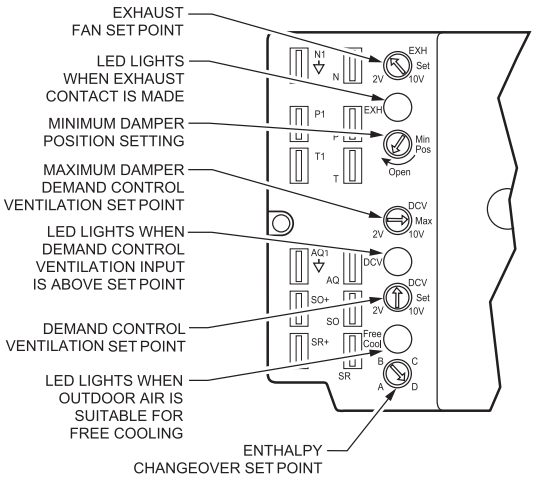

C06034

Fig. 66 – EconoMi$er IV Controller Potentiometer and LED Locations

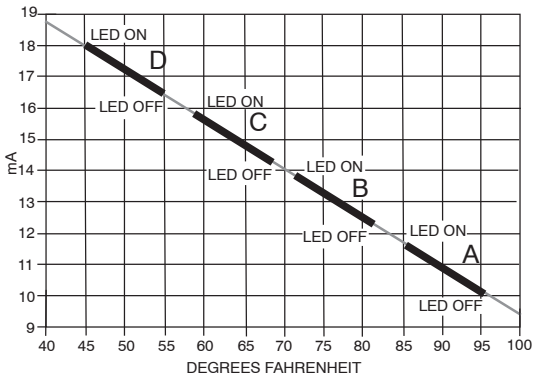

C06035

Fig. 67 – Outside Air Temperature Changeover Setpoints

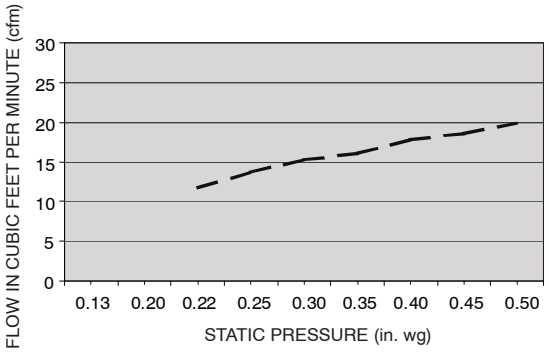

C06031

Fig. 68 – Outdoor–Air Damper Leakage

Differential Dry Bulb Control

For differential dry bulb control the standard outdoor dry bulb sensor is used in conjunction with an additional accessory dry bulb sensor (p/n: CRTEMPSN002A00). The accessory sensor must be mounted in the return airstream. See Fig. 69. Wiring is provided in the EconoMi$er IV wiring harness.

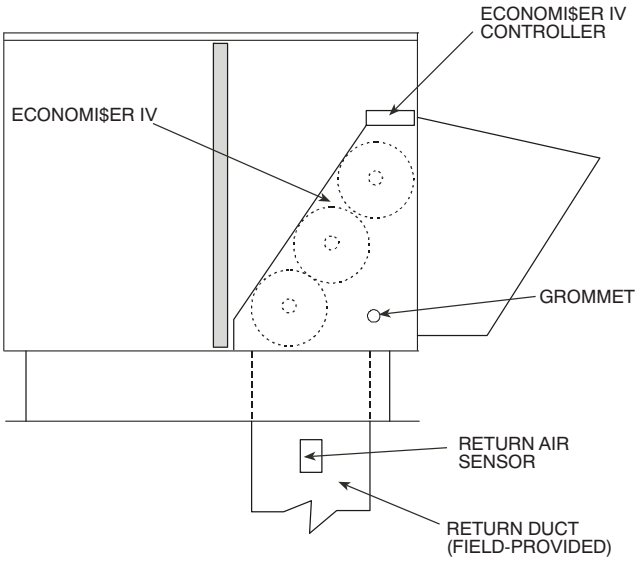

C07085

Fig. 69 – Return Air Temperature or Enthalpy Sensor Mounting Location

In this mode of operation, the outdoor-air temperature is compared to the return-air temperature and the lower temperature airstream is used for cooling. When using this mode of changeover control, turn the enthalpy setpoint potentiometer fully clockwise to the D setting. See Fig. 66.

Outdoor Enthalpy Changeover

For enthalpy control, accessory enthalpy sensor (p/n: HH57AC078) is required. Replace the standard outdoor dry bulb temperature sensor with the accessory enthalpy sensor in the same mounting location. See Fig. 69. When the outdoor air enthalpy rises above the outdoor enthalpy changeover setpoint, the outdoor-air damper moves to its minimum position. The outdoor enthalpy changeover setpoint is set with the outdoor enthalpy setpoint potentiometer on the EconoMi$er IV controller. The setpoints are A, B, C, and D. See Fig. 70. The factory-installed 620-ohm jumper must be in place across terminals S_R and SR+ on the EconoMi$er IV controller.

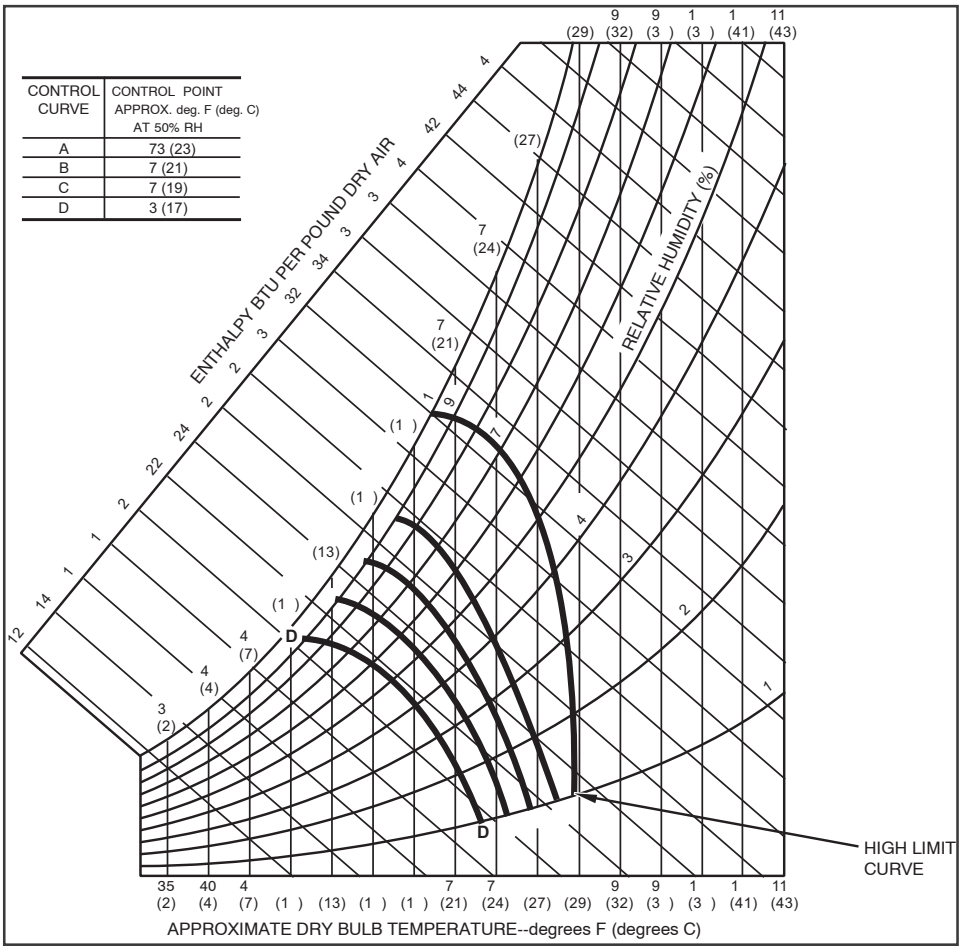

C06037

Fig. 70 – Enthalpy Changeover Setpoints

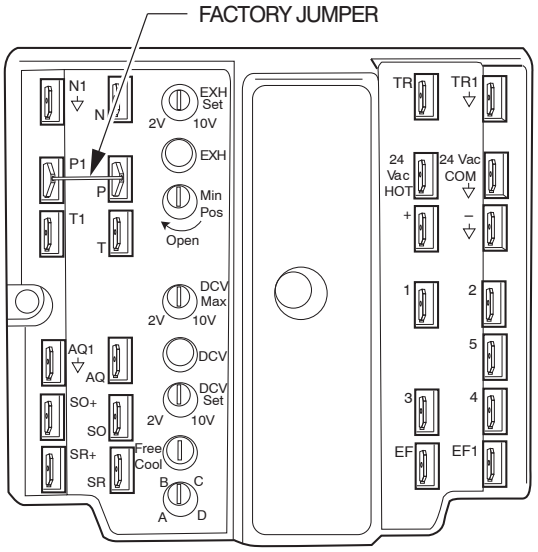

C06038

Fig. 71 – EconoMi$er IV Control

Differential Enthalpy Control

For differential enthalpy control, the EconoMi$er IV controller uses two enthalpy sensors (HH57AC078 and CRENTDIF004A00), one in the outside air and one in the return air duct. The EconoMi$er IV controller compares the outdoor air enthalpy to the return air enthalpy to determine EconoMi$er IV use. The controller selects the lower enthalpy air (return or outdoor) for cooling. For example, when the outdoor air has a lower enthalpy than the return air, the EconoMi$er IV opens to bring in outdoor air for free cooling.

Replace the standard outside air dry bulb temperature sensor with the accessory enthalpy sensor in the same mounting location. See Fig. 61. Mount the return air enthalpy sensor in the return air duct. See Fig. 69. Wiring is provided in the EconoMi$er IV wiring harness. See Fig. 62. The outdoor enthalpy changeover setpoint is set with the outdoor enthalpy setpoint potentiometer on the EconoMi$er IV controller. When using this mode of changeover control, turn the enthalpy setpoint potentiometer fully clockwise to the D setting.

Indoor Air Quality (IAQ) Sensor Input

The IAQ input can be used for demand control ventilation control based on the level of CO_2 measured in the space or return air duct.

Mount the accessory IAQ sensor according to manufacturer specifications. The IAQ sensor should be wired to the AQ and AQ1 terminals of the controller. Adjust the DCV potentiometers to correspond to the DCV voltage output of the indoor air quality sensor at the user-determined setpoint. See Fig. 71.

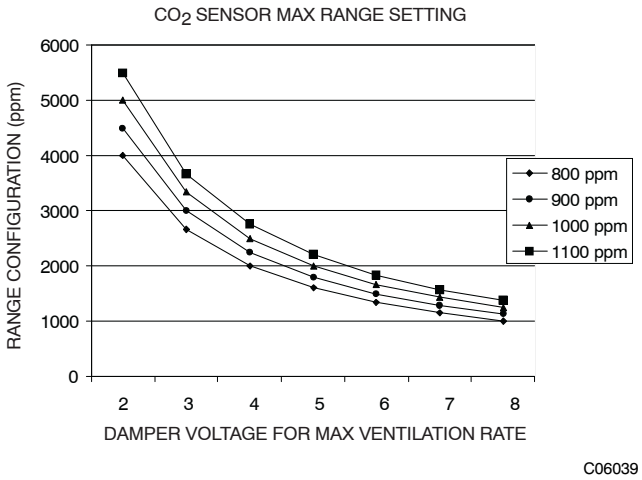

Fig. 72 – CO_2 Sensor Maximum Range Settings

If a separate field-supplied transformer is used to power the IAQ sensor, the sensor must not be grounded or the EconoMi$er IV control board will be damaged.

When using demand ventilation, the minimum damper position represents the minimum ventilation position for VOC (volatile organic compounds) ventilation requirements. The maximum demand ventilation position is used for fully occupied ventilation.

When demand ventilation control is not being used, the minimum position potentiometer should be used to set the occupied ventilation position. The maximum demand ventilation position should be turned fully clockwise.

Exhaust Setpoint Adjustment

The exhaust setpoint will determine when the exhaust fan runs based on damper position (if accessory power exhaust is installed). The setpoint is modified with the Exhaust Fan Setpoint (EXH SET) potentiometer. See Fig. 71. The setpoint represents the damper position above which the exhaust fans will be turned on. When there is a call for exhaust, the EconoMi$er IV controller provides a 45 ± 15 second delay before exhaust fan activation to allow the dampers to open. This delay allows the damper to reach the appropriate position to avoid unnecessary fan overload.

Minimum Position Control

There is a minimum damper position potentiometer on the EconoMi$er IV controller. See Fig. 71. The minimum damper position maintains the minimum airflow into the building during the occupied period.

When using demand ventilation, the minimum damper position represents the minimum ventilation position for Volatile Organic Compound (VOC) ventilation requirements. The maximum demand ventilation position is used for fully occupied ventilation.

When demand ventilation control is not being used, the minimum position potentiometer should be used to set the occupied ventilation position. The maximum demand ventilation position should be turned fully clockwise.

Adjust the minimum position potentiometer to allow the minimum amount of outdoor air, as required by local codes, to enter the building. Make minimum position adjustments with at least 10°F temperature difference between the outdoor and return-air temperatures.

To determine the minimum position setting, perform the following procedure:

1. Calculate the appropriate mixed air temperature using the following formula:

$$(T_O \times \frac{OA}{100}) + (TR \times \frac{RA}{100}) = T_M$$

T_O = Outdoor-Air Temperature
OA = Percent of Outdoor Air
T_R = Return-Air Temperature
RA = Percent of Return Air
T_M = Mixed-Air Temperature

As an example, if local codes require 10% outdoor air during occupied conditions, outdoor-air temperature is 60°F, and return-air temperature is 75°F.

(60 x .10) + (75 x .90) = 73.5°F

2. Disconnect the supply air sensor from terminals T and T1.
3. Ensure that the factory-installed jumper is in place across terminals P and P1. If remote damper positioning is being used, make sure that the terminals are wired according to Fig. 62 and that the minimum position potentiometer is turned fully clockwise.
4. Connect 24 vac across terminals TR and TR1.
5. Carefully adjust the minimum position potentiometer until the measured mixed air temperature matches the calculated value.
6. Reconnect the supply air sensor to terminals T and T1.

Remote control of the EconoMi$er IV damper is desirable when requiring additional temporary ventilation. If a field-supplied remote potentiometer (Honeywell p/n: S963B1128) is wired to the EconoMi$er IV controller, the minimum position of the damper can be controlled from a remote location.

To control the minimum damper position remotely, remove the factory-installed jumper on the P and P1 terminals on the EconoMi$er IV controller. Wire the field-supplied potentiometer to the P and P1 terminals on the EconoMi$er IV controller. (See Fig. 71.)

Damper Movement

Damper movement from full open to full closed (or vice versa) takes $2^1/_2$ minutes.

Thermostats

The EconoMi$er IV control works with conventional thermostats that have a Y1 (cool stage 1), Y2 (cool stage 2), W1 (heat stage 1), W2 (heat stage 2), and G (fan). The EconoMi$er IV control does not support space temperature sensors. Connections are made at the thermostat terminal connection board located in the main control box.

Occupancy Control

The factory default configuration for the EconoMi$er IV control is occupied mode. Occupied status is provided by the black jumper from terminal TR to terminal N. When unoccupied mode is desired, install a field−supplied timeclock function in place of the jumper between TR and N. When the timeclock contacts are closed, the EconoMi$er IV control will be in occupied mode. When the timeclock contacts are open (removing the 24V signal from terminal N), the EconoMi$er IV will be in unoccupied mode.

Demand Control Ventilation (DCV)

When using the EconoMi$er IV for demand controlled ventilation, there are some equipment selection criteria which should be considered. When selecting the heat capacity and cool capacity of the equipment, the maximum ventilation rate must be evaluated for design conditions. The maximum damper position must be calculated to provide the desired fresh air.

Typically the maximum ventilation rate will be about 5 to 10% more than the typical cfm required per person, using normal outside air design criteria.

A proportional anticipatory strategy should be taken with the following conditions: a zone with a large area, varied occupancy, and equipment that cannot exceed the required ventilation rate at design conditions. Exceeding the required ventilation rate means the equipment can condition air at a maximum ventilation rate that is greater than the required ventilation rate for maximum occupancy. A proportional-anticipatory strategy will cause the fresh air supplied to increase as the room CO_2 level increases even though the CO_2 setpoint has not been reached. By the time the CO_2 level reaches the setpoint, the damper will be at maximum ventilation and should maintain the setpoint.

In order to have the CO_2 sensor control the economizer damper in this manner, first determine the damper voltage output for minimum or base ventilation. Base ventilation is the ventilation required to remove contaminants during unoccupied periods. The following equation may be used to determine the percent of outside air entering the building for a given damper position. For best results there should be at least 10 degree difference in outside and return-air temperatures.

$$(T_O \times \frac{OA}{100}) + (TR \times \frac{RA}{100}) = T_M$$

T_O = Outdoor-Air Temperature

OA = Percent of Outdoor Air

T_R = Return-Air Temperature

RA = Percent of Return Air

T_M = Mixed-Air Temperature

Once base ventilation has been determined, set the minimum damper position potentiometer to the correct position.

The same equation can be used to determine the occupied or maximum ventilation rate to the building. For example, an output of 3.6 volts to the actuator provides a base ventilation rate of 5% and an output of 6.7 volts provides the maximum ventilation rate of 20% (or base plus 15 cfm per person). Use Fig. 72 to determine the maximum setting of the CO_2 sensor. For example, an 1100 ppm setpoint relates to a 15 cfm per person design. Use the 1100 ppm curve on Fig. 72 to find the point when the CO_2 sensor output will be 6.7 volts. Line up the point on the graph with the left side of the chart to determine that the range configuration for the CO_2 sensor should be 1800 ppm. The EconoMi$er IV controller will output the 6.7 volts from the CO_2 sensor to the actuator when the CO_2 concentration in the space is at 1100 ppm. The DCV setpoint may be left at 2 volts since the CO_2 sensor voltage will be ignored by the EconoMi$er IV controller until it rises above the 3.6 volt setting of the minimum position potentiometer.

Once the fully occupied damper position has been determined, set the maximum damper demand control ventilation potentiometer to this position. Do not set to the maximum position as this can result in over-ventilation to the space and potential high humidity levels.

CO_2 Sensor Configuration

The CO_2 sensor has preset standard voltage settings that can be selected anytime after the sensor is powered up. See Table 20.

Use setting 1 or 2 for CarrierBryant equipment. See Table 20.

1. Press Clear and Mode buttons. Hold at least 5 seconds until the sensor enters the Edit mode.
2. Press Mode twice. The STDSET Menu will appear.

Table 20 – EconoMi$er IV Sensor Usage

APPLICATION	ECONOMI$ER IV WITH OUTDOOR AIR DRY BULB SENSOR		
	Accessories Required		
Outdoor Air Dry Bulb	None. The outdoor air dry bulb sensor is factory installed.		
Differential Dry Bulb	CRTEMPSN002A00*		
Single Enthalpy	HH57AC078		
Differential Enthalpy	HH57AC078 and CRENTDIF004A00*		
CO_2 for DCV Control using a Wall-Mounted CO_2 Sensor	33ZCSENCO2		
CO_2 for DCV Control using a Duct-Mounted CO_2 Sensor	33ZCSENCO2† and 33ZCASPCO2**	OR	CRCBDIOX005A00††

* CRENTDIF004A00 and CRTEMPSN002A00 accessories are used on many different base units. As such, these kits may contain parts that will not be needed for installation.

† 33ZCSENCO2 is an accessory CO_2 sensor.

** 33ZCASPCO2 is an accessory aspirator box required for duct-mounted applications.

†† CRCBDIOX005A00 is an accessory that contains both 33ZCSENCO2 and 33ZCASPCO2 accessories.

3. Use the Up/Down button to select the preset number. See Table 20.
4. Press Enter to lock in the selection.
5. Press Mode to exit and resume normal operation.

The custom settings of the CO_2 sensor can be changed anytime after the sensor is energized. Follow the steps below to change the non-standard settings:

1. Press Clear and Mode buttons. Hold at least 5 seconds until the sensor enters the Edit mode.
2. Press Mode twice. The STDSET Menu will appear.
3. Use the Up/Down button to toggle to the NONSTD menu and press Enter.
4. Use the Up/Down button to toggle through each of the nine variables, starting with Altitude, until the desired setting is reached.
5. Press Mode to move through the variables.
6. Press Enter to lock in the selection, then press Mode to continue to the next variable.

Dehumidification of Fresh Air with DCV (Demand Controlled Ventilation) Control

If normal rooftop heating and cooling operation is not adequate for the outdoor humidity level, an energy recovery unit and/or a dehumidification option should be considered.

EconoMi$er IV Preparation

This procedure is used to prepare the EconoMi$er IV for troubleshooting. No troubleshooting or testing is done by performing the following procedure.

NOTE: This procedure requires a 9V battery, 1.2 kilo−ohm resistor, and a 5.6 kilo−ohm resistor which are not supplied with the EconoMi$er IV.

IMPORTANT: Be sure to record the positions of all potentiometers before starting troubleshooting.

1. Disconnect power at TR and TR1. All LEDs should be off. Exhaust fan contacts should be open.
2. Disconnect device at P and P1.
3. Jumper P to P1.
4. Disconnect wires at T and T1. Place 5.6 kilo−ohm resistor across T and T1.
5. Jumper TR to 1.
6. Jumper TR to N.
7. If connected, remove sensor from terminals SO and +. Connect 1.2 kilo−ohm 4074EJM checkout resistor across terminals SO and +.
8. Put 620−ohm resistor across terminals SR and +.
9. Set minimum position, DCV setpoint, and exhaust potentiometers fully CCW (counterclockwise).
10. Set DCV maximum position potentiometer fully CW (clockwise).
11. Set enthalpy potentiometer to D.
12. Apply power (24 vac) to terminals TR and TR1.

Differential Enthalpy

To check differential enthalpy:

1. Make sure EconoMi$er IV preparation procedure has been performed.
2. Place 620−ohm resistor across SO and +.
3. Place 1.2 kilo−ohm resistor across SR and +. The Free Cool LED should be lit.
4. Remove 620−ohm resistor across SO and +. The Free Cool LED should turn off.
5. Return EconoMi$er IV settings and wiring to normal after completing troubleshooting.

Single Enthalpy

To check single enthalpy:

1. Make sure EconoMi$er IV preparation procedure has been performed.
2. Set the enthalpy potentiometer to A (fully CCW). The Free Cool LED should be lit.
3. Set the enthalpy potentiometer to D (fully CW). The Free Cool LED should turn off.
4. Return EconoMi$er IV settings and wiring to normal after completing troubleshooting.

DCV (Demand Controlled Ventilation) and Power Exhaust

To check DCV and Power Exhaust:

1. Make sure EconoMi$er IV preparation procedure has been performed.
2. Ensure terminals AQ and AQ1 are open. The LED for both DCV and Exhaust should be off. The actuator should be fully closed.
3. Connect a 9V battery to AQ (positive node) and AQ1 (negative node). The LED for both DCV and Exhaust should turn on. The actuator should drive to between 90 and 95% open.
4. Turn the Exhaust potentiometer CW until the Exhaust LED turns off. The LED should turn off when the potentiometer is approximately 90%. The actuator should remain in position.
5. Turn the DCV setpoint potentiometer CW until the DCV LED turns off. The DCV LED should turn off when the potentiometer is approximately 9−v. The actuator should drive fully closed.
6. Turn the DCV and Exhaust potentiometers CCW until the Exhaust LED turns on. The exhaust contacts will close 30 to 120 seconds after the LED turns on.
7. Return EconoMi$er IV settings and wiring to normal after completing troubleshooting.

DCV Minimum and Maximum Position

To check the DCV minimum and maximum position:

1. Make sure EconoMi$er IV preparation procedure has been performed.
2. Connect a 9v battery to AQ (positive node) and AQ1 (negative node). The DCV LED should turn on. The actuator should drive to between 90 and 95% open.
3. Turn the DCV Maximum Position potentiometer to midpoint. The actuator should drive to between 20 and 80% open.
4. Turn the DCV Maximum Position potentiometer to fully CCW. The actuator should drive fully closed.
5. Turn the Minimum Position potentiometer to midpoint. The actuator should drive to between 20 and 80% open.
6. Turn the Minimum Position Potentiometer fully CW. The actuator should drive fully open.

7. Remove the jumper from TR and N. The actuator should drive fully closed.
8. Return EconoMi$er IV settings and wiring to normal after completing troubleshooting.

Supply–Air Sensor Input

To check supply–air sensor input:

1. Make sure EconoMi$er IV preparation procedure has been performed.
2. Set the Enthalpy potentiometer to A. The Free Cool LED turns on. The actuator should drive to between 20 and 80% open.
3. Remove the 5.6 kilo–ohm resistor and jumper T to T1. The actuator should drive fully open.
4. Remove the jumper across T and T1. The actuator should drive fully closed.
5. Return EconoMi$er IV settings and wiring to normal after completing troubleshooting.

EconoMi$er IV Troubleshooting Completion

This procedure is used to return the EconoMi$er IV to operation. No troubleshooting or testing is done by performing the following procedure.

1. Disconnect power at TR and TR1.
2. Set enthalpy potentiometer to previous setting.
3. Set DCV maximum position potentiometer to previous setting.
4. Set minimum position, DCV setpoint, and exhaust potentiometers to previous settings.
5. Remove 620–ohm resistor from terminals SR and +.
6. Remove 1.2 kilo–ohm checkout resistor from terminals SO and +. If used, reconnect sensor from terminals SO and +.
7. Remove jumper from TR to N.
8. Remove jumper from TR to 1.
9. Remove 5.6 kilo–ohm resistor from T and T1. Reconnect wires at T and T1.
10. Remove jumper from P to P1. Reconnect device at P and P1.
11. Apply power (24 vac) to terminals TR and TR1.

PRE–START–UP/START–UP

⚠ WARNING

PERSONAL INJURY HAZARD

Failure to follow this warning could result in personal injury or death.

1. Follow recognized safety practices and wear approved Personal Protective Equipment (PPE), including safety glasses and gloves when checking or servicing refrigerant system.
2. Do not use a torch to remove any component. System contains oil and refrigerant under pressure. To remove a component, wear PPE and proceed as follows:
   a. Shut off all electrical power to unit. Apply applicable Lock–out/Tagout procedures.
   b. Recover refrigerant to relieve all pressure from system using both high–pressure and low pressure ports.
   c. Do not use a torch. Cut component connection tubing with tubing cutter and remove component from unit.
   d. Carefully un–sweat remaining tubing stubs when necessary. Oil can ignite when exposed to torch flame.
3. Do not operate compressor or provide any electric power to unit unless compressor terminal cover is in place and secured.
4. Do not remove compressor terminal cover until all electrical power is disconnected and approved Lock–out/Tagout procedures are in place.
5. Relieve all pressure from system before touching or disturbing anything inside terminal box whenever refrigerant leak is suspected around compressor terminals.
6. Never attempt to repair a soldered connection while refrigerant system is under pressure.

⚠ WARNING

ELECTRICAL OPERATION HAZARD

Failure to follow this warning result in personal injury or death.

The unit must be electrically grounded in accordance with local codes and NEC ANSI/NFPA 70 (American National Standards Institute/National fire Protection Association.

Proceed as follows to inspect and prepare the unit for initial start–up:

1. Remove all access panels.
2. Read and follow instructions on all WARNING, CAUTION, and INFORMATION labels attached to, or shipped with, unit.
3. Make the following inspections:
   a. Inspect for shipping and handling damages such as broken lines, loose parts, or disconnected wires, etc.
   b. Inspect for oil at all refrigerant tubing connections and on unit base. Detecting oil generally indicates a refrigerant leak. Leak–test all refrigerant tubing connections using electronic leak detector, halide torch, or liquid–soap solution.
   c. Inspect all field–wiring and factory–wiring connections. Be sure that connections are completed and tight. Be sure that wires are not in contact with refrigerant tubing or sharp edges.
   d. Inspect coil fins. If damaged during shipping and handling, carefully straighten fins with a fin comb.
4. Verify the following conditions:
   a. Make sure that condenser–fan blade are correctly positioned in fan orifice. See Condenser–Fan Adjustment section for more details.
   b. Make sure that air filter(s) is in place.
   c. Make sure that condensate drain trap is filled with water to ensure proper drainage.
   d. Make sure that all tools and miscellaneous loose parts have been removed.

START–UP, GENERAL

Unit Preparation

Make sure that unit has been installed in accordance with installation instructions and applicable codes.

IMPORTANT: Follow the base unit's start-up sequence as described in the unit's installation instructions:

In addition to the base unit start-up, there are a few steps needed to properly start-up the controls. RTU-OPEN's Service Test function should be used to assist in the base unit start-up and also allows verification of output operation. Controller configuration is also part of start-up. This is especially important when field accessories have been added to the unit. The factory pre-configures options installed at the factory. There may also be additional installation steps or inspection required during the start-up process.

Additional Installation/Inspection

Inspect the field installed accessories for proper installation, making note of which ones do or do not require configuration changes. Inspect the RTU-OPEN's Alarms for initial insight to any potential issues. Refer to the following manual: *"Controls, Start–up, Operation and Troubleshooting Instructions."* Inspect the SAT sensor for relocation as intended during installation. Inspect special wiring as directed below.

Gas Piping

Check gas piping for leaks.

⚠ WARNING

FIRE, EXPLOSION HAZARD

Failure to follow this warning could result in death, serious personal injury and/or property damage.

Disconnect gas piping from unit when pressure testing at pressure greater than 0.5 psig. Pressures greater than 0.5 psig will cause gas valve damage resulting in hazardous condition. If gas valve is subjected to pressure greater than 0.5 psig, it *must* be replaced before use. When pressure testing field-supplied gas piping at pressures of 0.5 psig or less, a unit connected to such piping must be isolated by closing the manual gas valve(s).

⚠ WARNING

FIRE, EXPLOSION HAZARD

Failure to follow this warning could result in personal injury, death and/or property damage.

Refer to the User's Information Manual provided with this unit for more details.

Do not store or use gasoline or other flammable vapors and liquids in the vicinity of this or any other appliance.

What to do if you smell gas:

DO NOT try to light any appliance.
DO NOT touch any electrical switch, or use any phone in your building.
IMMEDIATELY call your gas supplier from a neighbor's phone. Follow the gas supplier's instructions.
If you cannot reach your gas supplier, call the fire department.

Return–Air Filters

Ensure correct filters are installed in unit (see Appendix II – Physical Data). Do not operate unit without return–air filters.

Outdoor–Air Inlet Screens

Outdoor–air inlet screen must be in place before operating unit.

Compressor Mounting

Compressors are internally spring mounted. Do not loosen or remove compressor hold down bolts.

Internal Wiring

Check all electrical connections in unit control boxes. Tighten as required.

Refrigerant Service Ports

Each unit system has two 1/4" SAE flare (with check valves) service ports: one on the suction line, and one on the compressor discharge line. Be sure that caps on the ports are tight.

Compressor Rotation

On 3–phase units with scroll compressors, it is important to be certain compressor is rotating in the proper direction. To determine whether or not compressor is rotating in the proper direction:

1. Connect service gauges to suction and discharge pressure fittings.
2. Energize the compressor.
3. The suction pressure should drop and the discharge pressure should rise, as is normal on any start–up.

If the suction pressure does not drop and the discharge pressure does not rise to normal levels:

4. Note that the evaporator fan is probably also rotating in the wrong direction.
5. Turn off power to the unit and install lockout tag.
6. Reverse any two of the unit power leads.
7. Re–energize to the compressor. Check pressures.

The suction and discharge pressure levels should now move to their normal start–up levels.

NOTE: When the compressor is rotating in the wrong direction, the unit will make an elevated level of noise and will not provide cooling.

Cooling

Set space thermostat to OFF position. To start unit, turn on main power supply. Set system selector switch at COOL position and fan switch at AUTO. position. Adjust thermostat to a setting below room temperature. Compressor starts on closure of contactor.

Check unit charge. Refer to Refrigerant Charge section.

Reset thermostat at a position above room temperature. Compressor will shut off. Evaporator fan will shut off after a 30–second delay.

To shut off unit, set system selector switch at OFF position. Resetting thermostat at a position above room temperature shuts unit off temporarily until space temperature exceeds thermostat setting.

Main Burners

Main burners are factory set and should require no adjustment.

To check ignition of main burners and heating controls, move thermostat setpoint above room temperature and verify that the burners light and evaporator fan is energized. Check heating effect, then lower the thermostat setting below the room temperature and verify that the burners and evaporator fan turn off.

Refer to Tables 15 and 16 for the correct orifice to use at high altitudes.

Heating

1. Purge gas supply line of air by opening union ahead of the gas valve. If gas odor is detected, tighten union and wait 5 minutes before proceeding.
2. Turn on electrical supply and manual gas valve.
3. Set system switch selector at HEAT position and fan switch at AUTO. or ON position. Set heating temperature lever above room temperature.
4. The induced–draft motor will start.
5. After a call for heating, the main burners should light within 5 seconds. If the burner does not light, then there is a 22–second delay before another 5–second try. If the burner still does not light, the time delay is repeated. If the burner does not light within 15 minutes, there is a lockout. To reset the control, break the 24 v power to W1.
6. The evaporator–fan motor will turn on 45 seconds after burner ignition.
7. The evaporator–fan motor will turn off in 45 seconds after the thermostat temperature is satisfied.
8. Adjust airflow to obtain a temperature rise within the range specified on the unit nameplate.

NOTE: The default value for the evaporator–fan motor on/off delay is 45 seconds. The Integrated Gas Unit Controller (IGC) modifies this value when abnormal limit switch cycles occur. Based upon unit operating conditions, the on delay can be reduced to 0 seconds and the off delay can be extended to 180 seconds. When one flash of the LED is observed, the evaporator–fan on/off delay has been modified.

If the limit switch trips at the start of the heating cycle during the evaporator on delay, the time period of the on delay for the next cycle will be 5 seconds less than the time at which the switch tripped. (Example: If the limit switch trips at 30 seconds, the evaporator–fan on delay for the next cycle will occur at 25 seconds.) To prevent short–cycling, a 5–second reduction will only occur if a minimum of 10 minutes has elapsed since the last call for heating.

The evaporator–fan off delay can also be modified. Once the call for heating has ended, there is a 10–minute period during which the modification can occur. If the limit switch trips during this period, the evaporator–fan off delay will increase by 15 seconds. A maximum of 9 trips can occur, extending the evaporator–fan off delay to 180 seconds.

To restore the original default value, reset the power to the unit.

To shut off unit, set system selector switch at OFF position. Resetting heating selector lever below room temperature will temporarily shut unit off until space temperature falls below thermostat setting.

Ventilation (Continuous Fan)

Set fan and system selector switches at ON and OFF positions, respectively. Evaporator fan operates continuously to provide constant air circulation. When the evaporator–fan selector switch is turned to the OFF position, there is a 30–second delay before the fan turns off.

START–UP, PREMIERLINK™ CONTROLS

⚠ WARNING

ELECTRICAL OPERATION HAZARD

Failure to follow this warning could result in personal injury or death.

The unit must be electrically grounded in accordance with local codes and NEC ANSI/NFPA 70 (American National Standards Institute/National Fire Protection Association.)

Use the Carrier network communication software to start up and configure the PremierLink controller.

Changes can be made using the ComfortWORKS® software, ComfortVIEW™ software, Network Service Tool, System Pilot™ device, or Touch Pilot™ device. The System Pilot and Touch Pilot are portable interface devices that allow the user to change system set–up and setpoints from a zone sensor or terminal control module. During start–up, the Carrier software can also be used to verify communication with PremierLink™ controller.

NOTE: All set–up and setpoint configurations are factory set and field–adjustable.

For specific operating instructions, refer to the literature provided with user interface software.

NOTICE

SET–UP INSTRUCTIONS

All set–up and set point configurations are factory set and field–adjustable.

Refer to the *PremierLink ™ Installation, Start–Up and Configuration Instructions* for specific operating instructions for the controller. Have a copy of this manual available at unit start–up.

Perform System Check–Out

1. Check correctness and tightness of all power and communication connections.
2. At the unit, check fan and system controls for proper operation.
3. At the unit, check electrical system and connections of any optional electric reheat coil.
4. Check to be sure the area around the unit is clear of construction dirt and debris.
5. Check that final filters are installed in the unit. Dust and debris can adversely affect system operation.
6. Verify that the PremierLink controls are properly connected to the CCN bus.

START−UP, RTU−OPEN CONTROLS

NOTICE

SET−UP INSTRUCTIONS

Refer to the following manuals for additional installation, wiring and troubleshooting information for the RTU−OPEN Controller.: *“Controls, Start−up, Operation and Troubleshooting Instructions,” “RTU Open Installation and Start−up Guide” and “RTU−Open Integration Guide”*. Have a copy of these manuals available at unit start−up.

FASTENER TORQUE VALUES

Table 21 – Torque Values

Supply fan motor mounting	120 in−lbs (13.6 Nm) ± 12 in−lbs (1.4Nm)
Supply fan motor adjustment plate	120 in−lbs (13.6 Nm) ± 12 in−lbs (1.4Nm)
Motor pulley setscrew	72 in−lbs (8.1 Nm) ± 5 in−lbs (0.6 Nm)
Fan pulley setscrew	72 in−lbs (8.1 Nm) ± 5 in−lbs (0.6 Nm)
Blower wheel hub setscrew	72 in−lbs (8.1 Nm) ± 5 in−lbs (0.6 Nm)
Bearing locking collar setscrew	50 in−lbs (6.2 Nm) −60 in−lbs (6.8 Nm)
Compressor mounting bolts	65 in−lbs (7.3 Nm) −75 in−lbs (8.5Nm)
Condenser fan motor mounting bolts	20 in−lbs (2.3 Nm) ± 2 in−lbs 0.2 Nm)
Condenser fan hub setscrew	84 in−lbs (9.5 Nm) ± 12 in−lbs (1.4 Nm)

APPENDIX I. MODEL NUMBER NOMENCLATURE

1	2	3	4	5	6	7	8	9	10	11	12	13	14	15	16	17	18
4	8	T	C	D	D	2	4	A	1	G	6	-	0	A	0	A	0

Unit Heat Type
48 = Gas Heat
Packaged Rooftop

Tier Model
TC = Standard Efficiency

Heat Size
D = Low Gas Heat
E = Medium Gas Heat
F = High Gas Heat
S = Low Stainless Gas Heat
R = Medium Stainless Gas Heat
T = High Stainless Gas heat

Refrigeration System Options
D = 2 - Stage Cooling
E = 2 - Stage Cooling with Humidi-MiZer (only available on 17 - 28 sizes with RTPF coil models)

Cooling Tons
17 = 15 ton
20 = 17.5 ton
24 = 20 ton
28 = 25 ton
30 = 27.5 ton

Sensor Options
A = None
B = RA Smoke Detector
C = SA Smoke Detector
D = RA + SA Smoke Detector
E = CO_2
F = RA Smoke Detector and CO_2
G = SA Smoke Detector and CO_2
H = RA + SA Smoke Detector and CO_2

Indoor Fan Options
1 = Standard Static Option - Vertical
2 = Medium Static Option - Vertical
3 = High Static Option - Vertical
B = Medium Static, High Efficiency Motor/ Vertical Supply, Return Air Flow
C = High Static, High Efficiency Motor/ Vertical Supply, Return Air Flow

5 = Standard Static Option - Horizontal
6 = Medium Static Option - Horizontal
7 = High Static Option - Horizontal
F = Medium Static, High Efficiency Motor/Horizontal Supply, Return Air Flow
G = High Static, High Efficiency Motor/Horizontal Supply, Return Air Flow

Coil Options
Novation Coils Only (MCHX) (Outdoor-Indoor-Hail Guard)

G = Al/Al - Al/Cu	T = Al/Al - Al/Cu, Louvered = Al/Al - Al/Cu, Louvered
H = Al/Al - Cu/Cu	U = Al/Al - Cu/Cu, Louvered = Al/Al - Cu/Cu, Louvered
J = Al/Al - E-Coat Al/Cu	V = Al/Al - E-Coat Al/Cu, Louvered
K = Al/Al - E-Coat - Al/Cu	W = Al/Al - E-Coat - Al/Cu, Louvered
L = Al/Al - E-Coat - Al/Cu E-Coat	X = Al/Al - E-Coat, Louvered

Round Tube Plate Fin (RTPF) (Outdoor-Indoor-Hail Guard)

A = Al/Cu - Al/Cu	M = Al/Cu - Al/Cu - Louvered
B = Precoat Al/Cu - Al/Cu	N = Precoat Al/Cu - Al/Cu - Louvered
C = E-Coat Al/Cu - Al/Cu	P = E-Coat Al/Cu - Al/Cu - Louvered
D = E-Coat Al/Cu - E-Coat Al/Cu	Q = E-Coat Al/Cu - E-Coat Al/Cu - Louvered
E = Cu/Cu - Al/Cu	R = Cu/Cu - Al/Cu - Louvered
F = Cu/Cu - Cu/Cu	S = Cu/Cu - Cu/Cu - Louvered

Voltage
1 = 575/3/60
5 = 208 - 230/3/60
6 = 460/3/60

Design Revision
- = Factory Assigned

Base Unit Controls
0 = Base Electromechanical Controls
1 = PremierLink Controller
2 = RTU-OPEN Multi-Protocol Controller
6 = Electromechanical with 2 - Speed Fan and W7220 Econo Controller

Intake / Exhaust Options
A = None
B = Temperature Economizer with Barometric Relief
F = Enthalpy Economizer with Barometric Relief
K = 2 - Position Damper
U = Temp Ultra Low Leak Economizer with Barometric Relief
V = Temp Ultra Low Leak Economizer with PE (cent) Power Exhaust
W = Enthalpy Ultra Low Leak Economizer with Barometric Relief
X = Enthalpy Ultra Low Leak Economizer with PE (cent) Power Exhaust

Service Options
0 = None
1 = Unpowered Convenience Outlet
2 = Powered Convenience outlet
3 = Hinged Panels
4 = Hinged Panels, Unpowered Convenience Outlet
5 = Hinged Panels, Powered Convenience Outlets

Electrical Options
A = None
C = Non-Fused Disconnect
G = 2-Speed Indoor Fan (VFD) Controll
J = 2-Speed Fan Controller (VFD) and Non-Fused Disconnect

Packaging and Seismic Complaince
0 = Standard
3 = California Seismic Complaint

C12275

Table 22 – PHYSICAL DATA – VERTICAL (COOLING) 15 – 27.5 TONS
RTPF – ROUND TUBE/PLATE FIN COIL DESIGN

		48TC*D17	48TC*E17	48TC*D20	48TC*E20
Refrigeration System		RTPF	RTPF	RTPF	RTPF
	# Circuits / # Comp. / Type	2 / 2 / Scroll	2 / 2 / Scroll	2 / 2 / Scroll	2 / 2 / Scroll
	R−410a charge A/B (lbs	16.3/17.5	25.9/25.7	16.3/17.5	25.9/25.7
	Metering device	Acutrol	TXV	Acutrol	TXV
	High−press. Trip / Reset (psig)	630 / 505	630 / 505	630 / 505	630 / 505
	Low−press. Trip / Reset (psig)	54 / 117	27 / 44	54 / 117	27 / 44
Evap. Coil					
	Material	Cu / Al	Cu / Al	Cu / Al	Cu / Al
	Tube Diameter	3/8”	3/8”	3/8”	3/8”
	Rows / FPI	4 / 15	4 / 15	4 / 15	4 / 15
	Total face area (ft^2)	22.00	22.00	22.00	22.00
	Condensate drain conn. size	3/4”	3/4”	3/4”	3/4”
Humidimizer Coil					
	Material	n/a	Cu / Al	n/a	Cu / Al
	Tube Diameter	n/a	3/8”	n/a	3/8”
	Rows / FPI	n/a	1 / 17	n/a	1 / 17
	Total face are (ft^2)	n/a	22.00	n/a	22.00
Evap. fan and motor					
Standard Static	Motor Qty / Belt Qty / Driver Type	1 / 1 / Belt	1 / 1 / Belt	1 / 1 / Belt	1 / 1 / Belt
	Max BHP	2.9	2.9	3.7	3.7
	RPM range	514−680	514−680	622−822	622−822
	motor frame size	56	56	56	56
	Fan Qty / Type	2 / Centrifugal	2 / Centrifugal	2 / Centrifugal	2 / Centrifugal
	Fan Diameter (in)	15 x 15	15 x 15	15 x 15	15 x 15
Medium Static	Motor Qty / Belt Qty / Driver Type	1 / 1 / Belt	1 / 1 / Belt	n/a	n/a
	Max BHP	3.3	3.3	n/a	n/a
	RPM range	679−863	679−863	n/a	n/a
	motor frame size	56	56	n/a	n/a
	Fan Qty / Type	2 / Centrifugal	2 / Centrifugal	n/a	n/a
	Fan Diameter (in)	15 x 15	15 x 15	n/a	n/a
High Static	Motor Qty / Belt Qty / Driver Type	1 / 1 / Belt	1 / 1 / Belt	n/a	n/a
	Max BHP	4.9	4.9	n/a	n/a
	RPM range	826−1009	826−1009	n/a	n/a
	motor frame size	56	56	n/a	n/a
	Fan Qty / Type	2 / Centrifugal	2 / Centrifugal	n/a	n/a
	Fan Diameter (in)	15 x 15	15 x 15	n/a	n/a
Medium Static− High Efficiency	Motor Qty / Belt Qty / Driver Type	n/a	n/a	1 / 1 / Belt	1 / 1 / Belt
	Max BHP (208/230/460/575v)	n/a	n/a	6.5/ 6.9/ 7.0/ 8.3	6.5/ 6.9/ 7.0/ 8.3
	RPM range	n/a	n/a	713−879	713−879
	motor frame size	n/a	n/a	184T	184T
	Fan Qty / Type	n/a	n/a	2 / Centrifugal	2 / Centrifugal
	Fan Diameter (in)	n/a	n/a	15 x 15	15 x 15
High Static− High Efficiency	Motor Qty / Belt Qty / Driver Type	n/a	n/a	1 / 1 / Belt	1 / 1 / Belt
	Max BHP (208/230/460/575v)	n/a	n/a	6.5/ 6.9/ 7.0/ 8.3	6.5/ 6.9/ 7.0/ 8.3
	RPM range	n/a	n/a	882−1078	882−1078
	motor frame size	n/a	n/a	184T	184T
	Fan Qty / Type	n/a	n/a	2 / Centrifugal	2 / Centrifugal
	Fan Diameter (in)	n/a	n/a	15 x 15	15 x 15

Table 22 (cont) – PHYSICAL DATA – VERTICAL (COOLING) 15 – 27.5 TONS
RTPF – ROUND TUBE/PLATE FIN COIL DESIGN

		48TC*D24	48TC*E24	48TC*D28	48TC*E28	48TC*D30
Refrigeration System		RTPF	RTPF	RTPF	RTPF	RTPF
	# Circuits / # Comp. / Type	2 / 2 / Scroll	2 / 2 / Scroll	2 / 2 / Scroll	2 / 2 / Scroll	2 / 2 / Scroll
	R−410a charge A/B (lbs	20.6/14.7	27.9/20.5	19.8/ 20.4	27.9/ 28.9	27.0/ 28.5
	Metering device	Acutrol	TXV	Acutrol	TXV	Acutrol
	High−press. Trip / Reset (psig)	630 / 505	630 / 505	630 / 505	630 / 505	630 / 505
	Low−press. Trip / Reset (psig)	54 / 117	27 / 44	54 / 117	27 / 44	54 / 117
Evap. Coil						
	Material	Cu / Al	Cu / Al	Cu / Al	Cu / Al	Cu / Al
	Tube Diameter	3/8”	3/8”	3/8”	3/8”	3/8”
	Rows / FPI	4 / 15	4 / 15	4 / 15	4 / 15	4 / 15
	Total face area (ft^2)	22.00	22.00	23.11	23.11	26
	Condensate drain conn. size	3/4”	3/4”	3/4”	3/4”	3/4”
Humidimizer Coil						
	Material	n/a	Cu / Al	n/a	Cu / Al	Cu / Al
	Tube Diameter	n/a	3/8”	n/a	3/8”	3/8”
	Rows / FPI	n/a	1 / 17	n/a	1 / 17	4 / 15
	Total face are (ft^2)	n/a	22.00	n/a	23.11	26
Evap. fan and motor						
Standard Static	Motor Qty / Belt Qty / Driver Type	1 / 1 / Belt	1 / 1 / Belt	1 / 1 / Belt	1 / 1 / Belt	n/a
	Max BHP	4.9	4.9	4.9	4.9	n/a
	RPM range	690−863	690−863	717−911	717−911	n/a
	motor frame size	56	56	56	56	n/a
	Fan Qty / Type	2 / Centrifugal	2 / Centrifugal	2 / Centrifugal	2 / Centrifugal	n/a
	Fan Diameter (in)	15 x 15	15 x 15	15 x 15	15 x 15	n/a
Standard Static – High Efficiency	Motor Qty / Belt Qty / Driver Type	n/a	n/a	n/a	n/a	1 / 1 / Belt
	Max BHP	n/a	n/a	n/a	n/a	6.5/ 6.9/ 7.0/ 8.3
	RPM range	n/a	n/a	n/a	n/a	751−954
	motor frame size	n/a	n/a	n/a	n/a	56
	Fan Qty / Type	n/a	n/a	n/a	n/a	2 / Centrifugal
	Fan Diameter (in)	n/a	n/a	n/a	n/a	15 x 15
Medium Static – High Efficiency	Motor Qty / Belt Qty / Driver Type	1 / 1 / Belt	1 / 1 / Belt	1 / 1 / Belt	1 / 1 / Belt	1 / 1 / Belt
	Max BHP (208/230/460/575v)	6.5/ 6.9/ 7.0/ 8.3	6.5/ 6.9/ 7.0/ 8.3	6.5/ 6.9/ 7.0/ 8.3	6.5/ 6.9/ 7.0/ 8.3	10.5/11.9/11.9/ 11
	RPM range	835−1021	835−1021	913−1116	913−1116	920−1190
	motor frame size	184T	184T	184T	184T	184T
	Fan Qty / Type	2 / Centrifugal	2 / Centrifugal	2 / Centrifugal	2 / Centrifugal	2 / Centrifugal
	Fan Diameter (in)	15 x 15	15 x 15	15 x 15	15 x 15	15 x 15
High Static– High Efficiency	Motor Qty / Belt Qty / Driver Type	1 / 1 / Belt	1 / 1 / Belt	1 / 1 / Belt	1 / 1 / Belt	1 / 2 Belt
	Max BHP (208/230/460/575v)	10.5/11.9/11.9/11	10.5/11.9/11.9/11	10.5/11.9/11.9/11	10.5/11.9/11.9/11	11.9/12.9/12.9/ 14.1
	RPM range	941−1176	941−1176	941−1176	941−1176	1015−1299
	motor frame size	213T	213T	213T	213T	213T
	Fan Qty / Type	2 / Centrifugal	2 / Centrifugal	2 / Centrifugal	2 / Centrifugal	2 / Centrifugal
	Fan Diameter (in)	15 x 15	15 x 15	15 x 15	15 x 15	15 x 15

Table 22 (cont) – PHYSICAL DATA – VERTICAL (COOLING) 15 – 27.5 TONS
RTPF – ROUND TUBE/PLATE FIN COIL DESIGN

	48TC*D17	48TC*E17	48TC*D20	48TC*E20	48TC*D24	48TC*E24	48TC*D28	48TC*E28	48TC*D30
Cond. Coil (Circuit A)									
Coil type	RTPF	RTPF	RTPF	RTPF	RTPF	RTPF	RTPF	RTPF	RTPF
Coil Length (in)	70	70	70	70	82	82	75	75	95
Coil Height (in)	44	44	44	44	44	44	52	52	52
Number of Passes I Rows / FPI	2 /17	2 /17	2 /17	2 /17	2 /17	2 /17	2 /17	2 /17	2 /17
total face area (ft2)	21.4	21.4	21.4	21.4	25.1	25.1	27.1	27.1	34.3
Cond. Coil (Circuit B)									
Coil type	RTPF	RTPF	RTPF	RTPF	RTPF	RTPF	RTPF	RTPF	RTPF
Coil Length (in)	70	70	70	70	57	57	75	75	95
Coil Height (in)	44	44	44	44	44	44	52	52	52
Rows / FPI	2 /17	2 /17	2 /17	2 /17	2 /17	2 /17	2 /17	2 /17	2 /17
total face area (ft2)	21.4	21.4	21.4	21.4	17.4	17.4	27.1	27.1	34.3
Cond. fan / motor									
Qty / Motor drive type	3 / direct	3 / direct	3 / direct	3 / direct	4 / direct	4 / direct	4 / direct	4 / direct	6 / direct
Motor HP / RPM	1/4 / 1100	1/4 / 1100	1/4 / 1100	1/4 / 1100	1/4 / 1100	1/4 / 1100	1/4 / 1100	1/4 / 1100	1/4 / 1100
Fan diameter (in)	22	22	22	22	22	22	22	22	22
Filters									
RA Filter # / size (in)	6 / 20 x 25 x 2	6 / 20 x 25 x 2	6 / 20 x 25 x 2	6 / 20 x 25 x 2	6 / 20 x 25 x 2	6 / 20 x 25 x 2	9 / 16 x 25 x 2	9 / 16 x 25 x 2	9 / 16 x 25 x 2
OA inlet screen # / size (in)	4 / 16 x 25 x 1	4 / 16 x 25 x 1	4 / 16 x 25 x 1	4 / 16 x 25 x 1	4 / 16 x 25 x 1	4 / 16 x 25 x 1	4 / 16 x 25 x 1	4 / 16 x 25 x 1	4 / 16 x 25 x 1

Table 23 – PHYSICAL DATA – VERTICAL (COOLING) 15 – 27.5 TONS
NOVATION – ALL ALUMINUM COIL DESIGN

			48TC—D17	48TC—D20	48TC—D24	48TC—D28
Refrigeration System			MCHX	MCHX	MCHX	MCHX
		# Circuits / # Comp. / Type	2 / 2 / Scroll	2 / 2 / Scroll	2 / 2 / Scroll	2 / 2 / Scroll
		R—410a charge A/B (lbs)	9.5/12.0	9.5/12.0	14.4/12.5	12.5/13.0
		Metering device	Acutrol	Acutrol	Acutrol	Acutrol
		High—press. Trip / Reset (psig)	630 / 505	630 / 505	630 / 505	630 / 505
		Low—press. Trip / Reset (psig)	54 / 117	54 / 117	54 / 117	54 / 117
Evap. Coil						
		Material	Cu / Al	Cu / Al	Cu / Al	Cu / Al
		Tube Diameter	3/8”	3/8”	3/8”	3/8”
		Rows / FPI	4 / 15	4 / 15	4 / 15	4 / 15
		total face area (ft^2)	19.56	19.56	22.00	23.11
		Condensate drain conn. size	3/4”	3/4”	3/4”	3/4”
Evap. fan and motor						
VERTICAL						
	Standard Static	Motor Qty / Belt Qty / Driver Type	1 / 1 Belt	1 / 1 Belt	1 / 1 Belt	1 / 1 Belt
		Max BHP	2.9	3.7	4.9	4.9
		RPM range	514—680	622—822	690—863	717—911
		motor frame size	56	56	56	56
		Fan Qty / Type	2 / Centrifugal	2 / Centrifugal	2 / Centrifugal	2 / Centrifugal
		Fan Diameter (in)	15 X 15	15 X 15	15 X 15	15 X 15
	Medium Static	Motor Qty / Belt Qty / Driver Type	1 / 1 Belt	n/a	n/a	n/a
		Max BHP	3.7	n/a	n/a	n/a
		RPM range	679—863	n/a	n/a	n/a
		motor frame size	56	n/a	n/a	n/a
		Fan Qty / Type	2 / Centrifugal	n/a	n/a	n/a
		Fan Diameter (in)	15 x 15	n/a	n/a	n/a
	High Static	Motor Qty / Belt Qty / Driver Type	1 / 1 Belt	n/a	n/a	n/a
		Max BHP	4.9	n/a	n/a	n/a
		RPM range	826—1009	n/a	n/a	n/a
		motor frame size	56	n/a	n/a	n/a
		Fan Qty / Type	2 / Centrifugal	n/a	n/a	n/a
		Fan Diameter (in)	15 x 15	n/a	n/a	n/a
	Medium Static — High Efficiency	Motor Qty / Belt Qty / Driver Type	n/a	1 / 1 Belt	1 / 1 Belt	1 / 1 Belt
		Max BHP (208/230/460/575v)	n/a	6.5/ 6.9/ 7.0/ 8.3	6.5/ 6.9/ 7.0/ 8.3	6.5/ 6.9/ 7.0/ 8.3
		RPM range	n/a	713—879	835—1021	913—1116
		motor frame size	n/a	184T	184T	184T
		Fan Qty / Type	n/a	2 / Centrifugal	2 / Centrifugal	2 / Centrifugal
		Fan Diameter (in)	n/a	15 x 15	15 x 15	15 x 15
	High Static— High Efficiency	Motor Qty / Belt Qty / Driver Type	n/a	1 / 1 Belt	1 / 1 Belt	1 / 1 Belt
		Max BHP (208/230/460/575v)	n/a	6.5/ 6.9/ 7.0/ 8.3	10.5/11.9/11.9/11	10.5/11.9/11.9/11
		RPM range	n/a	882—1078	941—1176	941—1176
		motor frame size	n/a	184T	213T	213T
		Fan Qty / Type	n/a	2 / Centrifugal	2 / Centrifugal	2 / Centrifugal
		Fan Diameter (in)	n/a	15 x 15	15 x 15	15 x 15

Table 23 (cont) – PHYSICAL DATA – VERTICAL (COOLING) 15 – 27.5 TONS
NOVATION – ALL ALUMINUM COIL DESIGN

	48TC—D17	48TC—D20	48TC—D24	48TC—D28
Cond. Coil (Circuit A)				
Coil type	Novation	Novation	Novation	Novation
Coil Length (in)	70	70	82	75
Coil Height (in)	44	44	44	52
Number of Passes I Rows / FPI	1 / 20.3	1 / 20.3	1 / 20.3	1 / 20.3
total face area (ft2)	21.4	21.4	25.1	27.1
Cond. Coil (Circuit B)				
Coil type	Novation	Novation	Novation	Novation
Coil Length (in)	70	70	57	75
Coil Height (in)	44	44	44	52
Rows / FPI	1 / 20.3	1 / 20.3	1 / 20.3	1 / 20.3
total face area (ft2)	21.4	21.4	17.4	27.1
Cond. fan / motor				
Qty / Motor drive type	3 / direct	3 / direct	4 / direct	4 / direct
Motor HP / RPM	1/4 / 1100	1/4 / 1100	1/4 / 1100	1/4 / 1100
Fan diameter (in)	22	22	22	22
Filters				
RA Filter # / size (in)	6 / 20 x 25 x 2	6 / 20 x 25 x 2	6 / 20 x 25 x 2	9 / 16 x 25 x 2
OA inlet screen # / size (in)	4 / 16 x 25 x 1	4 / 16 x 25 x 1	4 / 16 x 25 x 1	4 / 16 x 25 x 1

Table 24 – PHYSICAL DATA – HORIZONTAL (COOLING) 15 – 25 TONS
RTPF – Round Tube/Plate Fin Coil Design

		48TC*D18	48TC*E18	48TC*D21	48TC*E21
Refrigeration System					
	# Circuits / # Comp. / Type	2 / 2 / Scroll	2 / 2 / Scroll	2 / 2 / Scroll	2 / 2 / Scroll
	R−410a charge A/B (lbs)	17/16.4	24.5/25.7	17.5/16.8	25.5/25.5
	Metering device	TXV	TXV	TXV	TXV
	High−press. Trip / Reset (psig)	630 / 505	630 / 505	630 / 505	630 / 505
	Low−press. Trip / Reset (psig)	54 / 117	27 / 44	54 / 117	27 / 44
Evap. Coil					
	Material	Cu / Al	Cu / Al	Cu / Al	Cu / Al
	Tube Diameter	3/8” RTPF	3/8” RTPF	3/8” RTPF	3/8” RTPF
	Rows / FPI	4 / 15	4 / 15	4 / 15	4 / 15
	total face area (ft^2)	22	22	22	22
	Condensate drain conn. size	3/4”	3/4”	3/4”	3/4”
Humidimizer Coil					
	Material	n/a	Cu / Al	n/a	Cu / Al
	Tube Diameter	n/a	3/8” RTPF	n/a	3/8” RTPF
	Rows / FPI	n/a	1 / 17	n/a	1 / 17
	total face area (ft^2)	n/a	22	n/a	22
Evap. fan and motor					
HORIZONTAL					
Standard Static	Motor Qty / Belt Qty / Driver Type	1/1/Belt	1/1/Belt	1/1/Belt	1/1/Belt
	Max BHP	2.9	2.9	3.7	3.7
	RPM range	514−680	514−680	622−822	622−822
	motor frame size	56	56	56	56
	Fan Qty / Type	2 / Centrifugal	2 / Centrifugal	2 / Centrifugal	2 / Centrifugal
	Fan Diameter (in)	18 x 15/15 X 11	18 x 15/15 X 11	18 x 15/15 X 11	18 x 15/15 X 11
Medium Static	Motor Qty / Belt Qty / Driver Type	1/1/Belt	1/1/Belt	1/1/Belt	1/1/Belt
	Max BHP	3.7	3.7	4.9	4.9
	RPM range	614−780	614−780	713−879	713−879
	motor frame size	56	56	56	56
	Fan Qty / Type	2 / Centrifugal	2 / Centrifugal	2 / Centrifugal	2 / Centrifugal
	Fan Diameter (in)	18 x 15/15 X 11	18 x 15/15 X 11	18 x 15/15 X 11	18 x 15/15 X 11
High Static	Motor Qty / Belt Qty / Driver Type	1/1/Belt	1/1/Belt	n/a	n/a
	Max BHP	4.9	4.9	n/a	n/a
	RPM range	746−912	746−912	n/a	n/a
	motor frame size	56	56	n/a	n/a
	Fan Qty / Type	2 / Centrifugal	2 / Centrifugal	n/a	n/a
	Fan Diameter (in)	18 x 15/15 X 11	18 x 15/15 X 11	n/a	n/a
High Static − High Eff.	Motor Qty / Belt Qty / Driver Type	n/a	n/a	1/1/Belt	1/1/Belt
	Max BHP	n/a	n/a	6.5/ 6.9/ 7.0/ 8.3	6.5/ 6.9/ 7.0/ 8.3
	RPM range	n/a	n/a	835−1021	835−1021
	motor frame size	n/a	n/a	184T	184T
	Fan Qty / Type	n/a	n/a	2 / Centrifugal	2 / Centrifugal
	Fan Diameter (in)	n/a	n/a	18 x 15/15 X 11	18 x 15/15 X 11

TABLE 24 (cont) – PHYSICAL DATA – HORIZONTAL (COOLING) 15 – 25 TONS
RTPF – Round Tube/Plate Fin Coil Design

		48TC*D25	48TC*E25	48TC*D29	48TC*E29
Refrigeration System					
	# Circuits / # Comp. / Type	2 / 2 / Scroll	2 / 2 / Scroll	2 / 2 / Scroll	2 / 2 / Scroll
	R−410a charge A/B (lbs)	23.8/23.1	30.0/30.7	24.9/27.7	35.1/35.4
	Metering device	TXV	TXV	TXV	TXV
	High−press. Trip / Reset (psig)	630 / 505	630 / 505	630 / 505	630 / 505
	Low−press. Trip / Reset (psig)	54 / 117	27 / 44	54 / 117	27 / 44
Evap. Coil					
	Material	Cu / Al	Cu / Al	Cu / Al	Cu / Al
	Tube Diameter	3/8” RTPF	3/8” RTPF	3/8” RTPF	3/8” RTPF
	Rows / FPI	4 / 15	4 / 15	4 / 15	4 / 15
	total face area (ft^2)	26	26	26	26
	Condensate drain conn. size	3/4”	3/4”	3/4”	3/4”
Humidimizer Coil					
	Material	n/a	Cu / Al	n/a	Cu / Al
	Tube Diameter	n/a	3/8” RTPF	n/a	3/8” RTPF
	Rows / FPI	n/a	1 / 17	n/a	1 / 17
	total face area (ft^2)	n/a	26	n/a	26
Evap. fan and motor					
	HORIZONTAL				
Standard Static	Motor Qty / Belt Qty / Driver Type	1/1/Belt	1/1/Belt	n/a	n/a
	Max BHP	4.9	4.9	n/a	n/a
	RPM range	690−863	690−863	n/a	n/a
	motor frame size	56	56	n/a	n/a
	Fan Qty / Type	2 / Centrifugal	2 / Centrifugal	n/a	n/a
	Fan Diameter (in)	18 x 15/15 X 11	18 x 15/15 X 11	n/a	n/a
Medium Static – High Eff.	Motor Qty / Belt Qty / Driver Type	1/1/Belt	1/1/Belt	1/1/Belt	1/1/Belt
	Max BHP	6.5/ 6.9/ 7.0/ 8.3	6.5/ 6.9/ 7.0/ 8.3	6.5/ 6.9/ 7.0/ 8.3	6.5/ 6.9/ 7.0/ 8.3
	RPM range	835−1021	835−1021	755−923	755−923
	motor frame size	184T	184T	184T	184T
	Fan Qty / Type	2 / Centrifugal	2 / Centrifugal	2 / Centrifugal	2 / Centrifugal
	Fan Diameter (in)	18 x 15/15 X 11	18 x 15/15 X 11	18 x 15/15 X 11	18 x 15/15 X 11
High Static – High Eff.	Motor Qty / Belt Qty / Driver Type	1/1/Belt	1/1/Belt	1/1/Belt	1/1/Belt
	Max BHP	10.5/11.9/11.9/11	10.5/11.9/11.9/11	10.5/11.9/11.9/11	10.5/11.9/11.9/11
	RPM range	941−1100	941−1100	906−1100	906−1100
	motor frame size	213T	213T	213T	213T
	Fan Qty / Type	2 / Centrifugal	2 / Centrifugal	2 / Centrifugal	2 / Centrifugal
	Fan Diameter (in)	18 x 15/15 X 11	18 x 15/15 X 11	18 x 15/15 X 11	18 x 15/15 X 11

TABLE 24 (cont) – PHYSICAL DATA – HORIZONTAL (COOLING) 15 – 25 TONS
RTPF – Round Tube/Plate Fin Coil Design

	48TC*D18	48TC*E18	48TC*D21	48TC*E21	48TC*D25	48TC*E25	48TC*D29	48TC*E29
Cond. Coil (Circuit A)								
Coil type	RTPF	RTPF	RTPF	RTPF	RTPF	RTPF	RTPF	RTPF
Coil Length (in)	70	70	72	72	82	82	95	95
Coil Height (in)	44	44	44	44	52	52	52	52
Rows / FPI	2 /17	2 /17	2 /17	2 /17	2 /17	2 /17	2 /17	2 /17
total face area (ft2)	21.4	21.4	22.0	22.0	29.6	29.6	34.3	34.3
Cond. Coil (Circuit B)								
Coil type	RTPF	RTPF	RTPF	RTPF	RTPF	RTPF	RTPF	RTPF
Coil Length (in)	70	70	64	64	80	80	95	95
Coil Height (in)	44	44	44	44	52	52	52	52
Rows / FPI	2 /17	2 /17	2 /17	2 /17	2 /17	2 /17	2 /17	2 /17
total face area (ft2)	21.4	21.4	19.5	19.5	29.6	29.6	34.3	34.3
Cond. fan / motor								
Qty / Motor drive type	3 / direct	3 / direct	4 / direct	4 / direct	4/ direct	4/ direct	6 / direct	6 / direct
Motor HP / RPM	1/4 / 1100	1/4 / 1100	1/4 / 1100	1/4 / 1100	1/4 / 1100	1/4 / 1100	1/4 / 1100	1/4 / 1100
Fan diameter (in)	22	22	22	22	22	22	22	22
Filters								
RA Filter # / size (in)	6 / 20 x 25 x 2	6 / 20 x 25 x 2	6 / 20 x 25 x 2	6 / 20 x 25 x 2	9 / 16 x 25 x 2	9 / 16 x 25 x 2	9 / 16 x 25 x 2	9 / 16 x 25 x 2
OA inlet screen # / size (in)	4 / 16 x 25 x 1	4 / 16 x 25 x 1	4 / 16 x 25 x 1	4 / 16 x 25 x 1	4 / 16 x 25 x 1	4 / 16 x 25 x 1	4 / 16 x 25 x 1	4 / 16 x 25 x 1

Table 25 – PHYSICAL DATA – VERTICAL (HEATING) 15 – 27.5 TONS

		48TC**17	48TC**20	48TC**24	48TC**28	48TC**30
Gas Connection		1	1	1	1	1
Heat Anticipator setting (Amps)		5 –13 / 0.18–0.47 11–13 / 0.40–0.47 0.14 0.14	5 –13 / 0.18–0.47 11–13 / 0.40–0.47 0.14 0.14	5 –13 / 0.18–0.47 11–13 / 0.40–0.47 0.14 0.14	5 –13 / 0.18–0.47 11–13 / 0.40–0.47 0.14 0.14	5 –13 / 0.18–0.47 11–13 / 0.40–0.47 0.14 0.14
Natural Gas Heat						
LOW	# of stages / # of burners (total)	2 / 5	2 / 5	2 / 5	2 / 5	2 / 5
	Connection Size	3/4” NPT	3/4” NPT	3/4” NPT	3/4” NPT	3/4” NPT
	Rollout switch opens / closes	195 / 115	195 / 115	195 / 115	195 / 115	195 / 115
	Temperature Rise	25 – 55	25 – 55	25 – 55	25 – 55	25 – 55
MED	# of stages / # of burners (total)	2 / 7	2 / 7	2 / 7	2 / 7	2 / 7
	Connection Size	3/4” NPT	3/4” NPT	3/4” NPT	3/4” NPT	3/4” NPT
	Rollout switch opens / closes	195 / 115	195 / 115	195 / 115	195 / 115	195 / 115
	Temperature Rise	30– 60	30– 60	30– 60	30– 60	30– 60
HIGH	# of stages / # of burners (total)	2 / 10	2 / 10	2 / 10	2 / 10	2 / 10
	Connection Size	3/4” NPT	3/4” NPT	3/4” NPT	3/4” NPT	3/4” NPT
	Rollout switch opens / closes	195 / 115	195 / 115	195 / 115	195 / 115	195 / 115
Liquid Propane Heat						
LOW	# of stages / # of burners (total)	2 / 5	2 / 5	2 / 5	2 / 5	2 / 5
	Connection Size	3/4” NPT	3/4” NPT	3/4” NPT	3/4” NPT	3/4” NPT
	Rollout switch opens / closes	195 / 115	195 / 115	195 / 115	195 / 115	195 / 115
	Temperature Rise	25 – 55	25 – 55	25 – 55	25 – 55	25 – 55
MED	# of stages / # of burners (total)	2 / 7	2 / 7	2 / 7	2 / 7	2 / 7
	Connection Size	3/4” NPT	3/4” NPT	3/4” NPT	3/4” NPT	3/4” NPT
	Rollout switch opens / closes	195 / 115	196 / 115	197 / 115	198 / 115	199 / 115
	Temperature Rise	30– 60	30– 60	30– 60	30– 60	30– 60
HIGH	# of stages / # of burners (total)	2 / 10	2 / 10	2 / 10	2 / 10	2 / 10
	Connection Size	3/4” NPT	3/4” NPT	3/4” NPT	3/4” NPT	3/4” NPT
	Rollout switch opens / closes	195 / 115	195 / 115	195 / 115	195 / 115	195 / 115
	Temperature Rise	35– 65	35– 65	35– 65	35– 65	35– 65

Table 26 – PHYSICAL DATA – HORIZONTAL (HEATING) 15 – 25 TONS

		48TC**18	48TC**21	48TC**25	48TC**29
Gas Connection					
	# of Gas Valves	1	1	1	1
	Nat. gas supply line press (in. w.g.) / (PSIG)	5 –13 / 0.18–0.47	5 –13 / 0.18–0.47	5 –13 / 0.18–0.47	5 –13 / 0.18–0.47
	LP supply line press (in. w.g.) / (PSIG)	11–13 / 0.40–0.47	11–13 / 0.40–0.47	11–13 / 0.40–0.47	11–13 / 0.40–0.47
Heat Anticipator setting (Amps)					
	1st stage	0.14	0.14	0.14	0.14
	2nd stage	0.14	0.14	0.14	0.14
Natural Gas Heat					
LOW	# of stages / # of burners (total)	2 / 5	2 / 5	2 / 5	2 / 5
	Connection Size	3/4” NPT	3/4” NPT	3/4” NPT	3/4” NPT
	Rollout switch opens / closes	195 / 115	195 / 115	195 / 115	195 / 115
	Temperature Rise	25 – 55	25 – 55	25 – 55	25 – 55
MED	# of stages / # of burners (total)	2 / 7	2 / 7	2 / 7	2 / 7
	Connection Size	3/4” NPT	3/4” NPT	3/4” NPT	3/4” NPT
	Rollout switch opens / closes	195 / 115	195 / 115	195 / 115	195 / 115
	Temperature Rise	30– 60	30– 60	30– 60	30– 60
HIGH	# of stages / # of burners (total)	2 / 10	2 / 10	2 / 10	2 / 10
	Connection Size	3/4” NPT	3/4” NPT	3/4” NPT	3/4” NPT
	Rollout switch opens / closes	195 / 115	195 / 115	195 / 115	195 / 115
	Temperature Rise	35– 65	35– 65	35– 65	35– 65
Liquid Propane Heat					
LOW	# of stages / # of burners (total)	2 / 5	2 / 5	2 / 5	2 / 5
	Connection Size	3/4” NPT	3/4” NPT	3/4” NPT	3/4” NPT
	Rollout switch opens / closes	195 / 115	195 / 115	195 / 115	195 / 115
	Temperature Rise	25 – 55	25 – 55	25 – 55	25 – 55
MED	# of stages / # of burners (total)	2 / 7	2 / 7	2 / 7	2 / 7
	Connection Size	3/4” NPT	3/4” NPT	3/4” NPT	3/4” NPT
	Rollout switch opens / closes	195 / 115	196 / 115	197 / 115	198 / 115
	Temperature Rise	30– 60	30– 60	30– 60	30– 60
HIGH	# of stages / # of burners (total)	2 / 10	2 / 10	2 / 10	2 / 10
	Connection Size	3/4” NPT	3/4” NPT	3/4” NPT	3/4” NPT
	Rollout switch opens / closes	195 / 115	195 / 115	195 / 115	195 / 115
	Temperature Rise	35– 65	35– 65	35– 65	35– 65

APPENDIX III. FAN PERFORMANCE

Table 27 – 48TC*D17 **VERTICAL SUPPLY / RETURN** **15 TON**

CFM	Available External Static Pressure (in. wg)									
	0.2		0.4		0.6		0.8		1.0	
	RPM	BHP	RPM	BHP	RPM	BHP	RPM	BHP	RPM	BHP
4500	**494**	**0.77**	583	1.09	662	1.43	732	1.80	796	2.19
4900	522	0.93	605	1.27	681	1.64	750	2.03	813	2.44
5250	547	1.10	626	1.45	700	1.84	766	2.24	828	2.67
5650	577	1.32	651	1.68	721	2.09	786	2.51	846	2.96
6000	603	1.53	674	1.91	741	2.33	804	2.78	863	3.24
6400	634	1.81	701	2.20	765	2.64	826	3.10	883	3.59
6750	662	2.07	725	2.49	787	2.94	846	3.42	902	3.92
7150	694	2.42	754	2.85	813	3.31	869	3.81	923	4.33
7500	722	2.74	779	3.19	836	3.67	890	4.19	943	4.72

CFM	Available External Static Pressure (in. wg)									
	1.2		1.4		1.6		1.8		2.0	
	RPM	BHP	RPM	BHP	RPM	BHP	RPM	BHP	RPM	BHP
4500	856	2.60	911	3.02	963	3.46	*1012*	*3.92*	*1059*	*4.39*
4900	871	2.86	926	3.30	977	3.76	*1026*	*4.23*	*1072*	*4.72*
5250	885	3.11	939	3.57	990	4.05	*1038*	*4.54*	–	–
5650	903	3.43	956	3.91	1006	4.40	–	–	–	–
6000	918	3.72	971	4.22	*1020*	*4.73*	–	–	–	–
6400	937	4.09	988	4.61	–	–	–	–	–	–
6750	954	4.44	–	–	–	–	–	–	–	–
7150	975	4.87	–	–	–	–	–	–	–	–
7500	–	–	–	–	–	–	–	–	–	–

Boldface indicates alternate standard static drive package.

Italics — Requires high static drive package and different motor pulley.

Mid Static Motor and Drive – 697–863 RPM; Max BHP 3.7

Std Static Motor and Drive – 514–680 RPM; Max BHP 2.9

High Static Motor and Drive – 826–1009 RPM; Max BHP 4.9

– Outside operating range

Table 28 – 48TC*D20 **VERTICAL SUPPLY / RETURN** **17.5 TON**

CFM	Available External Static Pressure (in. wg)									
	0.2		0.4		0.6		0.8		1.0	
	RPM	BHP	RPM	BHP	RPM	BHP	RPM	BHP	RPM	BHP
5250	**547**	**1.10**	626	1.45	700	1.84	766	2.24	828	2.67
5700	**581**	**1.35**	655	1.72	724	2.12	789	2.55	849	3.00
6150	**615**	**1.63**	684	2.02	750	2.44	812	2.90	871	3.37
6550	646	1.92	711	2.32	774	2.77	834	3.24	891	3.73
7000	682	2.28	743	2.71	803	3.17	860	3.66	915	4.17
7450	718	2.70	775	3.14	832	3.62	887	4.13	940	4.67
7900	755	3.16	809	3.62	863	4.12	915	4.65	966	5.21
8300	787	3.62	839	4.09	891	4.61	941	5.16	990	5.73
8750	825	4.18	874	4.68	923	5.22	971	5.78	1018	6.38

CFM	Available External Static Pressure (in. wg)									
	1.2		1.4		1.6		1.8		2.0	
	RPM	BHP	RPM	BHP	RPM	BHP	RPM	BHP	RPM	BHP
5250	885	3.11	939	3.57	990	4.05	1038	4.54	*1084*	*5.04*
5700	905	3.47	958	3.95	1008	4.45	1055	4.96	*1100*	*5.48*
6150	925	3.86	977	4.36	1026	4.88	1073	5.42	*1118*	*5.96*
6550	945	4.24	995	4.76	1043	5.30	*1090*	*5.86*	*1134*	*6.42*
7000	967	4.71	1017	5.26	1064	5.82	*1109*	*6.39*	1153	6.98
7450	991	5.22	1039	5.79	*1085*	*6.38*	1130	6.98	1172	7.59
7900	1015	5.78	1062	6.38	1107	6.99	1151	7.61	–	–
8300	1038	6.33	1084	6.94	1128	7.57	1171	8.21	–	–
8750	1064	6.99	1109	7.63	1152	8.28	–	–	–	–

Boldface indicates alternate standard static drive package.

Voltage — 208V / 230V / 460V / 575V for High Static

UNDERSCORE — Operation point covered by factory package. Confirm max BPH based on unit voltage selected.

Mid Static Motor and Drive – 713–879 RPM; Max BHP 4.9

Std Static Motor and Drive – 622–822 RPM; Max BHP 3.3

High Static Motor and Drive – 882–1078 RPM; Max BHP 6.5/6.9/7.0/8.3

Requires high static drive package with different motor pulley. Confirm max BPH based on unit voltage selected.

Italics — Requires high static drive package and different motor pulley.

– Outside operating range

Table 29 – 48TC*D24 **VERTICAL SUPPLY / RETURN** **20 TON**

CFM	Available External Static Pressure (in. wg)									
	0.2		0.4		0.6		0.8		1.0	
	RPM	BHP	RPM	BHP	RPM	BHP	RPM	BHP	RPM	BHP
6000	**620**	**1.53**	689	1.84	752	2.16	810	2.49	865	2.83
6500	**660**	**1.88**	725	2.22	785	2.56	841	2.92	894	3.28
7000	701	2.29	762	2.65	819	3.02	873	3.40	923	3.78
7500	742	2.76	800	3.15	855	3.54	906	3.94	955	4.34
8000	784	3.30	839	3.71	891	4.12	940	4.55	987	4.97
8500	826	3.90	879	4.33	928	4.78	975	5.22	1021	5.67
9000	869	4.57	919	5.03	966	5.50	1011	5.97	1055	6.44
9500	911	5.32	959	5.81	1005	6.30	1048	6.79	1090	7.29
10000	954	6.15	1000	6.66	1044	7.18	1086	7.70	1126	8.22

CFM	Available External Static Pressure (in. wg)									
	1.2		1.4		1.6		1.8		2.0	
	RPM	BHP	RPM	BHP	RPM	BHP	RPM	BHP	RPM	BHP
6000	917	3.18	967	3.54	1015	3.91	1061	4.30	1105	4.69
6500	944	3.65	992	4.03	1038	4.42	1083	4.82	1126	5.23
7000	972	4.17	1018	4.57	1063	4.98	1106	5.40	1148	5.83
7500	1001	4.76	1046	5.18	1090	5.61	1131	6.05	1172	6.49
8000	1032	5.41	1076	5.85	1117	6.30	1158	6.76	–	–
8500	1064	6.13	1106	6.59	1147	7.07	*1186*	*7.54*	–	–
9000	1097	6.92	1138	7.41	1177	7.90	–	–	–	–
9500	1131	7.79	1170	8.30	–	–	–	–	–	–
10000	1166	8.75	–	–	–	–	–	–	–	–

Boldface indicates alternate standard static drive package. *Italics* — Requires high static drive pkg & different motor pulley. All voltages.

Mid Static Motor and Drive — 835—1021 RPM; Voltage — 208V/230V/460V/575V; Max BHP 6.5/6.9/7.0/8.3

Std Static Motor and Drive — 690—863 RPM; Max BHP 4.9

High Static Motor and Drive — 941—1176 RPM; Voltage — 208V/230V/460V/575V; Max BHP 10.5/11.9/11.9/11.0

– Outside operating range

Table 30 – 48TC*D28 **VERTICAL SUPPLY / RETURN** **25 TON**

CFM	Available External Static Pressure (in. wg)									
	0.2		0.4		0.6		0.8		1.0	
	RPM	BHP	RPM	BHP	RPM	BHP	RPM	BHP	RPM	BHP
7500	731	2.21	796	2.60	856	3.00	911	3.40	963	3.81
8150	783	2.76	844	3.19	901	3.61	954	4.05	1003	4.49
8750	832	3.35	890	3.80	943	4.26	994	4.73	1042	5.19
9400	885	4.08	940	4.57	991	5.06	1039	5.55	1085	6.05
10000	934	4.85	986	5.36	1035	5.88	1082	6.40	1126	6.93
10650	988	5.78	1038	6.33	1084	6.88	1129	7.44	1172	8.00
11250	1038	6.74	1086	7.32	1130	7.91	1173	8.49	–	–
11900	1093	7.91	1138	8.52	1181	9.14	–	–	–	–
12500	1144	9.10	1187	9.74	–	–	–	–	–	–

CFM	Available External Static Pressure (in. wg)									
	1.2		1.4		1.6		1.8		2.0	
	RPM	BHP	RPM	BHP	RPM	BHP	RPM	BHP	RPM	BHP
7500	1011	4.23	1058	4.66	1102	5.09	1145	5.53	*1186*	*5.98*
8150	1050	4.94	1095	5.39	1138	5.85	*1180*	*6.32*	–	–
8750	1088	5.67	1131	6.15	1173	6.64	–	–	–	–
9400	1129	6.56	1172	7.07	–	–	–	–	–	–
10000	1169	7.47	–	–	–	–	–	–	–	–
10650	–	–	–	–	–	–	–	–	–	–
11250	–	–	–	–	–	–	–	–	–	–
11900	–	–	–	–	–	–	–	–	–	–
12500	–	–	–	–	–	–	–	–	–	–

Boldface indicates alternate standard static drive package. Voltage — 208V / 230V / 460V / 575V for Mid and High Static

Mid Static Motor & Drive — 913—1116 RPM; Max BHP 6.5/6.9/7.0/8.3

Std Static Motor & Drive — 711—911 RPM; Max BHP 4.9

High Static Motor & Drive — 941—1176 RPM; Max BHP 10.5/11.9/11.9/11.0

Italics — Requires high static drive package and different motor pulley. All voltages.

UNDERSCORE — Operation point covered by factory package. Confirm max BPH based on unit voltage selected.

– Outside operating range

Table 31 – 48TC*D30 **VERTICAL SUPPLY / RETURN** **27.5 TON**

CFM	Available External Static Pressure (in. wg)									
	0.2		0.4		0.6		0.8		1.0	
	RPM	BHP	RPM	BHP	RPM	BHP	RPM	BHP	RPM	BHP
8250	791	2.86	852	3.28	908	3.72	960	4.16	1010	4.60
8950	848	3.57	905	4.03	958	4.50	1008	4.97	1055	5.45
9650	906	4.39	959	4.89	1009	5.39	1057	5.89	1102	6.41
10300	959	5.26	1010	5.79	1058	6.33	1104	6.87	1147	7.41
11000	1018	6.33	1066	6.90	1111	7.47	1155	8.04	1197	8.62
11700	1076	7.54	1122	8.14	1165	8.74	1207	9.35	1247	9.96
12400	1135	8.90	1178	9.53	1220	10.17	1260	10.82	1299	11.46
13050	1190	10.30	1231	10.97	1271	11.64	–	–	–	–
13750	1249	11.97	1289	12.67	–	–	–	–	–	–

CFM	Available External Static Pressure (in. wg)									
	1.2		1.4		1.6		1.8		2.0	
	RPM	BHP	RPM	BHP	RPM	BHP	RPM	BHP	RPM	BHP
8250	1056	5.05	1101	5.51	1144	5.98	1185	6.45	1225	6.93
8950	1100	5.93	1144	6.42	1185	6.92	1225	7.42	1264	7.93
9650	1146	6.92	1187	7.45	1228	7.98	1266	8.51	–	–
10300	1189	7.96	1229	8.51	1268	9.07	–	–	–	–
11000	1237	9.20	1276	9.79	–	–	–	–	–	–
11700	1286	10.58	–	–	–	–	–	–	–	–
12400	–	–	–	–	–	–	–	–	–	–
13050	–	–	–	–	–	–	–	–	–	–
13750	–	–	–	–	–	–	–	–	–	–

Boldface indicates alternate standard static drive package. Voltage — 208V / 230V / 460V / 575V for Mid and High Static

Mid Static Motor & Drive — 973—1175 RPM; Max BHP 10.5/11.9/11.9/11.0

Std Static Motor & Drive — 751—954 RPM; Max BHP 6.5

High Static Motor & Drive — 941—1176 RPM; Max BHP 11.9/12.9/12.9/14.1

Operation point covered by high static drive. Confirm max BPH coverage based on unit voltage selected.

– Outside operating range

Table 32 – 48TC*D18 **HORIZONTAL SUPPLY / RETURN** **15 TON**

CFM	Available External Static Pressure (in. wg)									
	0.2		0.4		0.6		0.8		1.0	
	RPM	BHP	RPM	BHP	RPM	BHP	RPM	BHP	RPM	BHP
4500	508	1.25	582	1.76	647	2.31	705	2.89	758	3.51
4900	540	1.51	610	2.05	672	2.64	729	3.26	781	3.91
5250	568	1.78	635	2.35	695	2.96	750	3.61	801	4.29
5650	600	2.13	664	2.73	723	3.37	776	4.05	825	4.76
6000	629	2.47	691	3.10	747	3.77	799	4.48	–	–
6400	663	2.91	721	3.57	776	4.28	–	–	–	–
6750	693	3.34	749	4.03	801	4.76	–	–	–	–
7150	727	3.88	781	4.61	–	–	–	–	–	–
7500	757	4.40	–	–	–	–	–	–	–	–

CFM	Available External Static Pressure (in. wg)									
	1.2		1.4		1.6		1.8		2.0	
	RPM	BHP	RPM	BHP	RPM	BHP	RPM	BHP	RPM	BHP
4500	807	4.16	852	4.83	–	–	–	–	–	–
4900	829	4.58	–	–	–	–	–	–	–	–
5250	–	–	–	–	–	–	–	–	–	–
5650	–	–	–	–	–	–	–	–	–	–
6000	–	–	–	–	–	–	–	–	–	–
6400	–	–	–	–	–	–	–	–	–	–
6750	–	–	–	–	–	–	–	–	–	–
7150	–	–	–	–	–	–	–	–	–	–
7500	–	–	–	–	–	–	–	–	–	–

Boldface indicates alternate standard static drive package.

Mid Static Motor and Drive — 614—780 RPM; Max BHP 3.7

Std Static Motor and Drive — 514—680 RPM; Max BHP 2.9

High Static Motor and Drive — 746—912 RPM; Max BHP 4.9

Italics — Requires high static drive package and different motor pulley. All voltages.

– Outside operating range

Table 33 – 48TC*D21 **HORIZONTAL SUPPLY / RETURN** **17.5 TON**

CFM	Available External Static Pressure (in. wg)									
	0.2		0.4		0.6		0.8		1.0	
	RPM	BHP	RPM	BHP	RPM	BHP	RPM	BHP	RPM	BHP
5250	568	1.78	635	2.35	695	2.96	750	3.61	801	4.29
5700	604	2.17	668	2.78	726	3.43	779	4.11	829	4.82
6150	642	2.63	702	3.27	758	3.95	809	4.67	857	5.42
6550	676	3.09	733	3.76	786	4.48	836	5.23	883	6.01
7000	714	3.67	769	4.38	820	5.14	868	5.92	913	6.74
7450	753	4.33	805	5.08	854	5.87	900	6.69	944	7.54
7900	792	5.06	841	5.85	888	6.68	933	7.54	–	–
8300	827	5.78	874	6.61	920	7.47	–	–	–	–
8750	867	6.69	912	7.55	–	–	–	–	–	–

CFM	Available External Static Pressure (in. wg)									
	1.2		1.4		1.6		1.8		2.0	
	RPM	BHP	RPM	BHP	RPM	BHP	RPM	BHP	RPM	BHP
5250	848	4.99	893	5.72	934	6.47	974	7.25	1012	8.05
5700	875	5.56	918	6.33	959	7.12	998	7.93	–	–
6150	902	6.20	944	7.00	985	7.83	–	–	–	–
6550	927	6.82	968	7.65	–	–	–	–	–	–
7000	955	7.58	–	–	–	–	–	–	–	–
7450	–	–	–	–	–	–	–	–	–	–
7900	–	–	–	–	–	–	–	–	–	–
8300	–	–	–	–	–	–	–	–	–	–
8750	–	–	–	–	–	–	–	–	–	–

Boldface indicates alternate standard static drive package.

Mid Static Motor and Drive — 713—879 RPM; Max BHP 4.9

Std Static Motor and Drive — 622—822 RPM; Max BHP 3.7

High Static Motor and Drive — 835—1021 RPM; Voltage — 208V / 230V / 460V / 575V; Max BHP 6.5/6.9/7.0/8.3

Operation point covered by high static drive. Confirm max BPH based on unit voltage selected.

– Outside operating range

Table 34 – 48TC*D25 **HORIZONTAL SUPPLY / RETURN** **20 TON**

CFM	Available External Static Pressure (in. wg)									
	0.2		0.4		0.6		0.8		1.0	
	RPM	BHP	RPM	BHP	RPM	BHP	RPM	BHP	RPM	BHP
6000	**633**	**1.92**	700	2.44	759	2.98	812	3.53	861	4.10
6500	**674**	**2.34**	738	2.90	795	3.48	847	4.07	894	4.67
7000	715	2.83	776	3.43	831	4.05	882	4.67	928	5.31
7500	757	3.39	816	4.03	869	4.68	917	5.35	963	6.03
8000	800	4.02	856	4.70	907	5.39	954	6.10	998	6.81
8500	843	4.73	896	5.45	945	6.18	991	6.93	1034	7.68
9000	886	5.52	937	6.28	984	7.06	1029	7.84	1071	8.63
9500	929	6.40	978	7.21	1024	8.02	1067	8.84	–	–
10000	973	7.38	1020	8.22	1064	9.08	–	–	–	–

CFM	Available External Static Pressure (in. wg)									
	1.2		1.4		1.6		1.8		2.0	
	RPM	BHP	RPM	BHP	RPM	BHP	RPM	BHP	RPM	BHP
6000	907	4.68	949	5.27	990	5.88	1028	6.50	1064	7.13
6500	939	5.29	981	5.92	1020	6.56	1058	7.21	1094	7.88
7000	972	5.97	1013	6.63	1052	7.31	1089	8.00	–	–
7500	1005	6.72	1046	7.42	1084	8.13	–	–	–	–
8000	1040	7.54	1079	8.28	–	–	–	–	–	–
8500	1075	8.45	–	–	–	–	–	–	–	–
9000	–	–	–	–	–	–	–	–	–	–
9500	–	–	–	–	–	–	–	–	–	–
10000	–	–	–	–	–	–	–	–	–	–

Boldface indicates alternate standard static drive package. Voltage — 208V / 230V / 460V / 575V for Mid and High Static

Mid Static Motor & Drive — 835—1021 RPM, Max BHP 6.5/6.9/7.0/8.3

Std Static Motor & Drive — 690—863 RPM, Max BHP 4.9

High Static Motor & Drive — 941—1100 RPM, Max BHP 10.5/11.9/11.9/11.0

UNDERSCORE — Operation point covered by medium static drive. Confirm max BPH based on unit voltage selected.

– Outside operating range

Table 35 – 48TC*D29 **HORIZONTAL SUPPLY / RETURN** **25 TON**

CFM	Available External Static Pressure (in. wg)									
	0.2		0.4		0.6		0.8		1.0	
	RPM	BHP	RPM	BHP	RPM	BHP	RPM	BHP	RPM	BHP
7500	**757**	**3.39**	816	4.03	869	4.68	917	5.35	963	6.03
8000	800	4.02	856	4.70	907	5.39	954	6.10	998	6.81
8500	843	4.73	896	5.45	945	6.18	991	6.93	1034	7.68
9000	886	5.52	937	6.28	984	7.06	1029	7.84	1071	8.63
9500	929	6.40	978	7.21	1024	8.02	1067	8.84	–	–
10000	973	7.38	1020	8.22	1064	9.08	–	–	–	–
10500	1017	8.45	1062	9.33	–	–	–	–	–	–
11000	1061	9.63	–	–	–	–	–	–	–	–
11500	–	–	–	–	–	–	–	–	–	–

CFM	Available External Static Pressure (in. wg)									
	1.2		1.4		1.6		1.8		2.0	
	RPM	BHP	RPM	BHP	RPM	BHP	RPM	BHP	RPM	BHP
7500	1005	6.72	1046	7.42	1084	8.13	–	–	–	–
8000	1040	7.54	1079	8.28	–	–	–	–	–	–
8500	1075	8.45	–	–	–	–	–	–	–	–
9000	–	–	–	–	–	–	–	–	–	–
9500	–	–	–	–	–	–	–	–	–	–
10000	–	–	–	–	–	–	–	–	–	–
10500	–	–	–	–	–	–	–	–	–	–
11000	–	–	–	–	–	–	–	–	–	–
11500	–	–	–	–	–	–	–	–	–	–

Boldface indicates alternate standard static drive package. Voltage — 208V / 230V / 460V / 575V for Mid and High Static

Mid Static Motor & Drive — 755—923 RPM, Max BHP 6.5/6.9/7.0/8.3

Std Static Motor & Drive — 649—791 RPM, Max BHP 4.9

High Static Motor & Drive — 906—1100 RPM, Max BHP 10.5/11.9/11.9/11.0

– Outside operating range

Table 36 – Pulley Adjustment – Vertical

Fan RPM at Motor Pulley Settings

MODEL SIZE		Motor/Drive Combo	Motor Pulley Turns Open										
			0	0.5	1	1.5	2	2.5	3	3.5	4	4.5	5
17	3 Phase	Standard Static	680	663	647	630	614	597	580	564	547	531	514
		Medium Static	863	845	826	808	789	771	753	734	716	697	679
		High Static	1009	991	972	954	936	918	899	881	863	844	826
20	3 Phase	Standard Static	822	802	782	762	742	722	702	682	662	642	622
		Medium Static	879	862	846	829	813	796	779	763	746	730	713
		High Static	1078	1058	1039	1019	1000	980	960	941	921	902	882
24	3 Phase	Standard Static	863	846	828	811	794	777	759	742	725	707	690
		Medium Static	1021	1002	984	965	947	928	909	891	872	854	835
		High Static	1176	1153	1129	1106	1082	1059	1035	1012	988	965	941
28	3 Phase	Standard Static	911	892	872	853	833	814	795	775	756	736	717
		Medium Static	1116	1096	1075	1055	1035	1015	994	974	954	933	913
		High Static	1176	1153	1129	1106	1082	1059	1035	1012	988	965	941
30	3 Phase	Standard Static	954	934	913	893	873	853	832	812	792	771	751
		Medium Static	1175	1155	1135	1114	1094	1074	1054	1034	1013	993	973
		High Static	1299	1271	1242	1214	1185	1157	1129	1100	1072	1043	1015

NOTE: Do not adjust pulley further than 5 turns open.

– Factory settings

Table 37 – Pulley Adjustment – Horizontal

Fan RPM at Motor Pulley Settings

MODEL SIZE		Motor/Drive Combo	Motor Pulley Turns Open										
			0	0.5	1	1.5	2	2.5	3	3.5	4	4.5	5
18	3 Phase	Standard Static	680	663	647	630	614	597	580	564	547	531	514
		Medium Static	780	763	747	730	714	697	680	664	647	631	614
		High Static	912	895	879	862	846	829	812	796	779	763	746
21	3 Phase	Standard Static	822	802	782	762	742	722	702	682	662	642	622
		Medium Static	879	862	846	829	813	796	779	763	746	730	713
		High Static	1021	1002	984	965	947	928	909	891	872	854	835
25	3 Phase	Standard Static	863	846	828	811	794	777	759	742	725	707	690
		Medium Static	1021	1002	984	965	947	928	909	891	872	854	835
		High Static	1176	1153	1129	1106	1082	1059	1035	1012	988	965	941
29	3 Phase	*Standard Static	791	777	762	748	733	719	705	690	676	661	647
		Medium Static	923	906	889	873	856	839	822	805	789	772	755
		High Static	1107	1087	1067	1047	1027	1007	986	986	946	926	906
30	3 Phase	Standard Static	N/A	N/A	N/A	N/A	N/A	N/A	N/A	N/A	N/A	N/A	N/A
		Medium Static	N/A	N/A	N/A	N/A	N/A	N/A	N/A	N/A	N/A	N/A	N/A
		High Static	N/A	N/A	N/A	N/A	N/A	N/A	N/A	N/A	N/A	N/A	N/A

NOTE: Do not adjust pulley further than 5 turns open.

– Factory settings

* Standard Static drive only for 50 series; 48 series uses a field supplied drive

APPENDIX IV. WIRING DIAGRAMS

Table 38 – Wiring Diagrams

48TC–D17 / 48TC–D28 UNITS					
		DUAL CIRCUIT		HUMIDI–MIZER®	
SIZE	VOLTAGE	CONTROL	POWER	CONTROL	POWER
D17	208/230–3–60	50HE500751–J	50HE500889–I	50HE502181–E	50HE502186–B
	460–3–60	50HE500751–J	50HE500752–I	50HE502181–E	50HE502183–C
	575–3–60	50HE500751–J	50HE500888–I	50HE502181–E	50HE502184–C
D20	208/230–3–60	50HE500751–J	50HE500889–I	50HE502181–E	50HE502186–B
	460–3–60	50HE500751–J	50HE500752–I	50HE502181–E	50HE502183–C
	575–3–60	50HE500751–J	50HE500888–I	50HE502181–E	50HE502184–C
D24	208/230–3–60	50HE500751–J	50HE500889–I	50HE502181–E	50HE502186–B
	460–3–60	50HE500751–J	50HE500752–I	50HE502181–E	50HE502183–C
	575–3–60	50HE500751–J	50HE500888–I	50HE502181–E	50HE502184–C
D28	208/230–3–60	50HE500751–J	50HE500889–I	50HE502181–E	50HE502186–B
	460–3–60	50HE500751–J	50HE500752–I	50HE502181–E	50HE502183–C
	575–3–60	50HE500751–J	50HE500888–I	50HE502181–E	50HE502184–C
ALL	PremierLink*	50HE500751J / 50HE500891F		50HE502181E / 50HE500891F	
ALL	RTU–Open*	50HE500751J / 50HE501687B		50HE502181E / 50HE501687B	

NOTE: Component arrangement on Control; Legend on Power Schematic.

* PremierLink and RTU–OPEN control labels overlay a portion of the base unit control label. The base unit label drawing and the control option drawing are required to provide a complete unit control diagram.

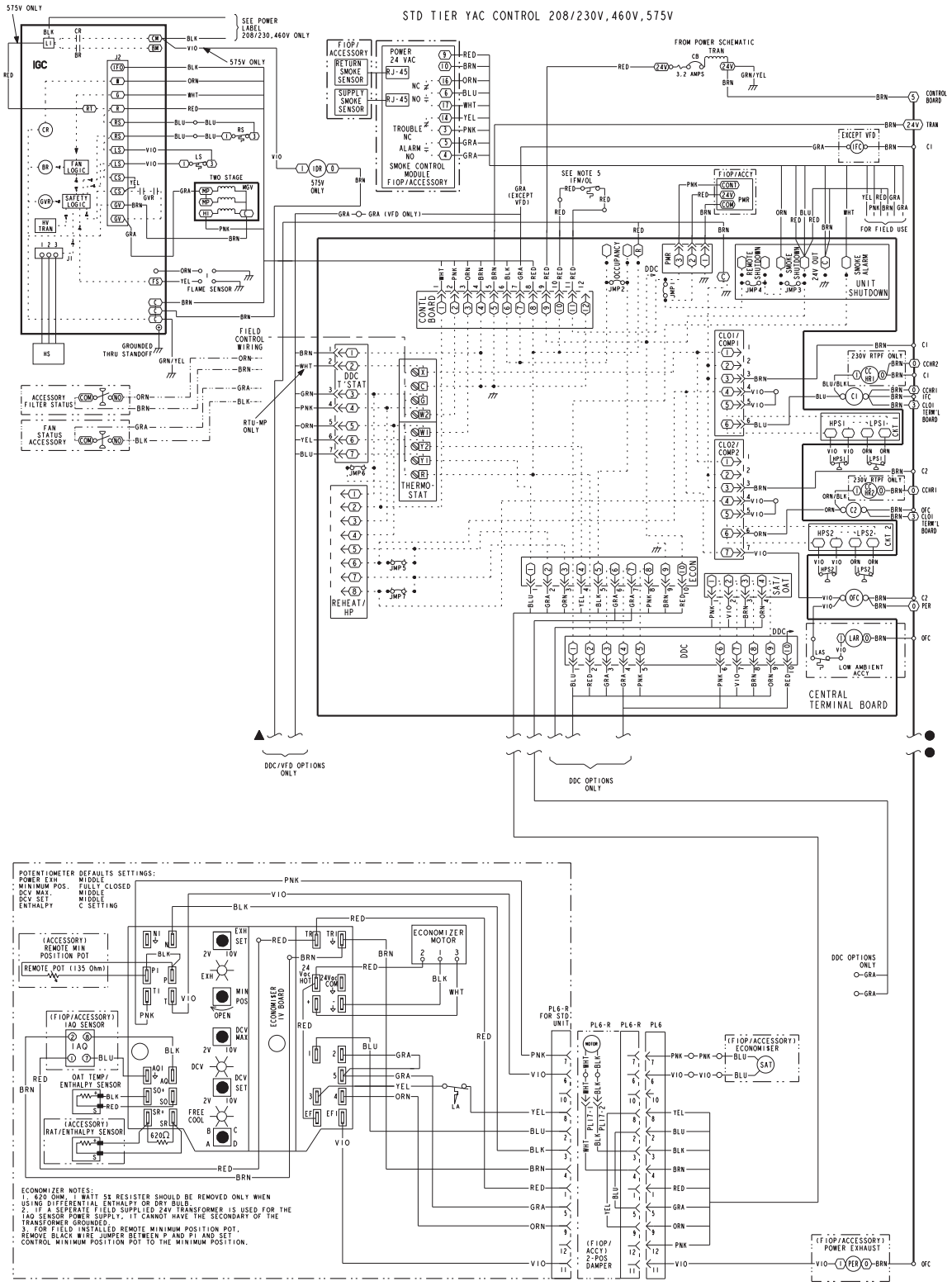

NOTES

1. IF ANY OF THE ORIGINAL WIRE FURNISHED MUST BE REPLACED, IT MUST BE REPLACED WITH TYPE 90 C WIRE OR ITS EQUIVALENT.
2. COMPRESSOR AND FAN MOTORS ARE THERMALLY PROTECTED. THREE PHASE MOTORS ARE PROTECTED AGAINST PRIMARY SINGLE PHASING CONDITIONS.
3. 208/230V UNIT TRAN IS WIRED FOR 230V UNIT. IF UNIT IS TO BE RUN WITH 208V POWER SUPPLY DISCONNECT BLK WIRE FROM 230V TAP AND CONNECT TO 200V TAP.
4. USE COPPER CONDUCTOR ONLY.
5. IFM OL IS NOT USED ON ALL MODELS. WHEN NOT USED, RED LEADS ARE CONNECTED TOGETHER.

C	CONTACTOR,COMPRESSOR
CAP	CAPACITOR
CB	CIRCUIT BREAKER
CCH	CRANKCASE HEATER
CCHR	CRFANKCASE HEATER RELAY
CCN	CARRIER COMFORT NETWORK
CMP SAFE	COMPRESSOR SAFFETY
COFS	CONDENSATE OVERFLOW SWITCH
COMP	COMPRESSOR MOTOR
CTB	CENTRAL TERMINAL BOARD
DDC	DIRECT DIGITAL CONTROL
FIOP	FACTORY INSTALLED OPTION
FSD	FIRE SHUT DOWN
FU	FUSE
GND	GROUND
GVR	GAS VALVE RELAY
HPS	HIGH PRESSURE SWITCH
HS	HALL EFFECT SENSOR
I	IGNITOR
IAQ	INDOOR AIR QUALITY SENSORS
IDM	INDUCED DRAFT MOTOR
IDR	INDUCED DRAFT RELAY
IFC	INDOOR FAN CONTACTOR
IFM	INDOOR FAN MOTOR
IGC	INTEGRATED GAS CONTROL
IRH	INDOOR RELATIVE HUMIDITY
LA	LOW AMBIENT LOCKOUT
LAR	LOW AMBIENT RELAY
LAS	LOW AMBIENT SWITCH
LOOP PWR	CURRENT LOOP POWER
LPS	LOW PRESSURE SWITCH
LSM	LIMIT SWITCH (MANUAL RESET)
MGV	MAIN GAS VALVE
OAQ	OUTDOOR AIR QUALITY
OAT	OUTDOOR AIR TEMP. SEN
OFC	OUTDOOR FAN CONTACTOR
OFM	OUTDOOR FAN MOTOR
OFTB	OUTDOOR FAN TERMINAL BLOCK
OLR	OVERLOAD RELAY
PER	POWER EXHAUST RELAY
PL	PLUG ASSEMBLY
POT	POTENTIOMETER
PMR	PHASE MONITOR RELAY
QT	QUADRUPLE TERMINAL
R	RELAY
RAT	RETURN AIR TEMP. SEN
RMT OCC	REMOTE OCCUPANCY
RS	ROLLOUT SWITCH
RTPF	ROUND TUBE PLATE FIN CONDENSER COIL
SAT	SUPPLY AIR TEMP. SENSOR
SEN	SENSOR
SET	SET POINT OFFSET
SFS	SUPPLY FAN STATUS
TDR	TIME DELAY RELAY
TRAN	TRANSFORMER
VFD	VARIABLE FREQUENCY DRIVE

50HE500751 J

C12615

Fig. 73 – 48TC D17 – D28 Control Diagram – 208/230–3–60; 460/575–3–60

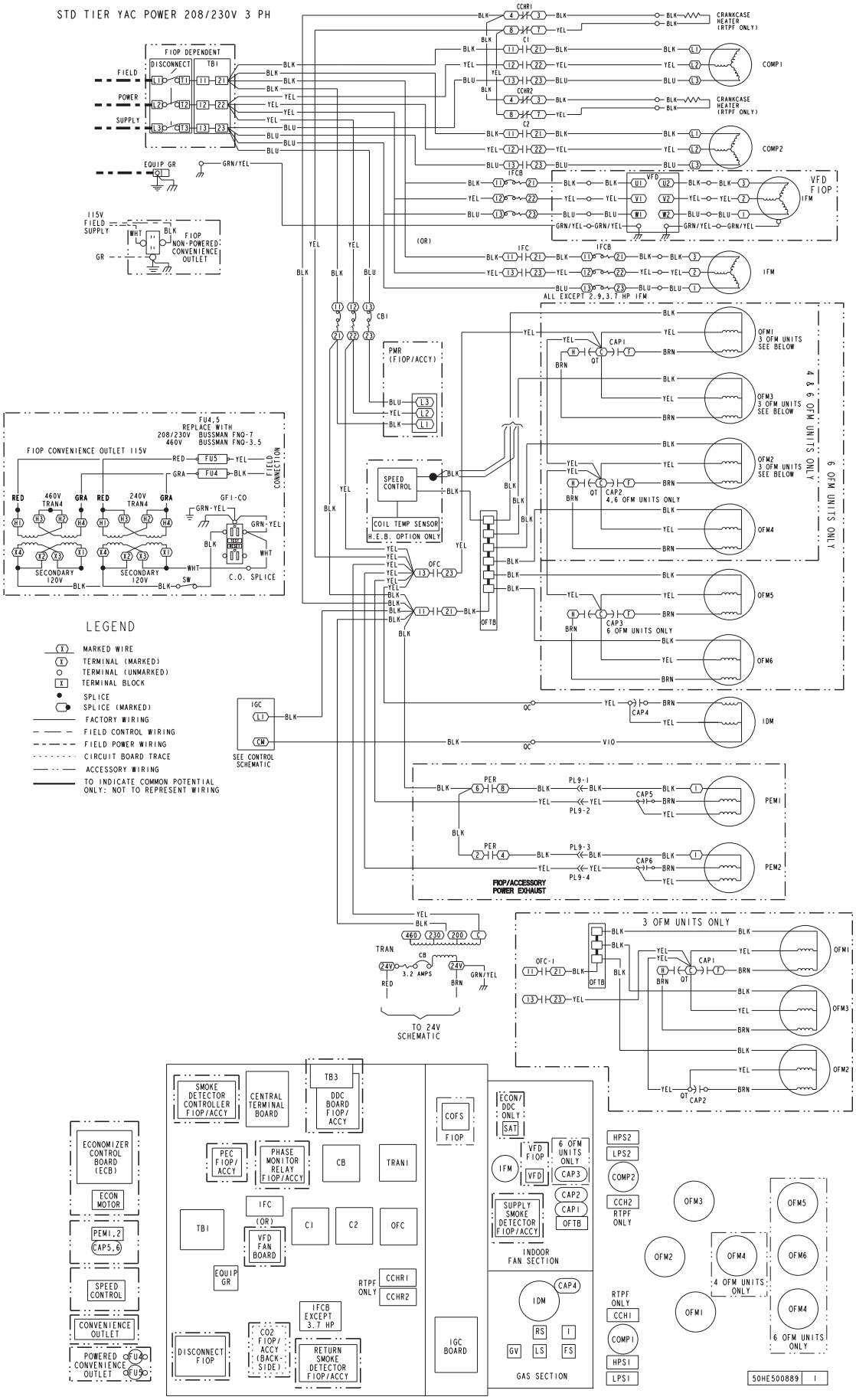

Fig. 74 – 48TC D17 – D28 Power Diagram – 208/230–3–60

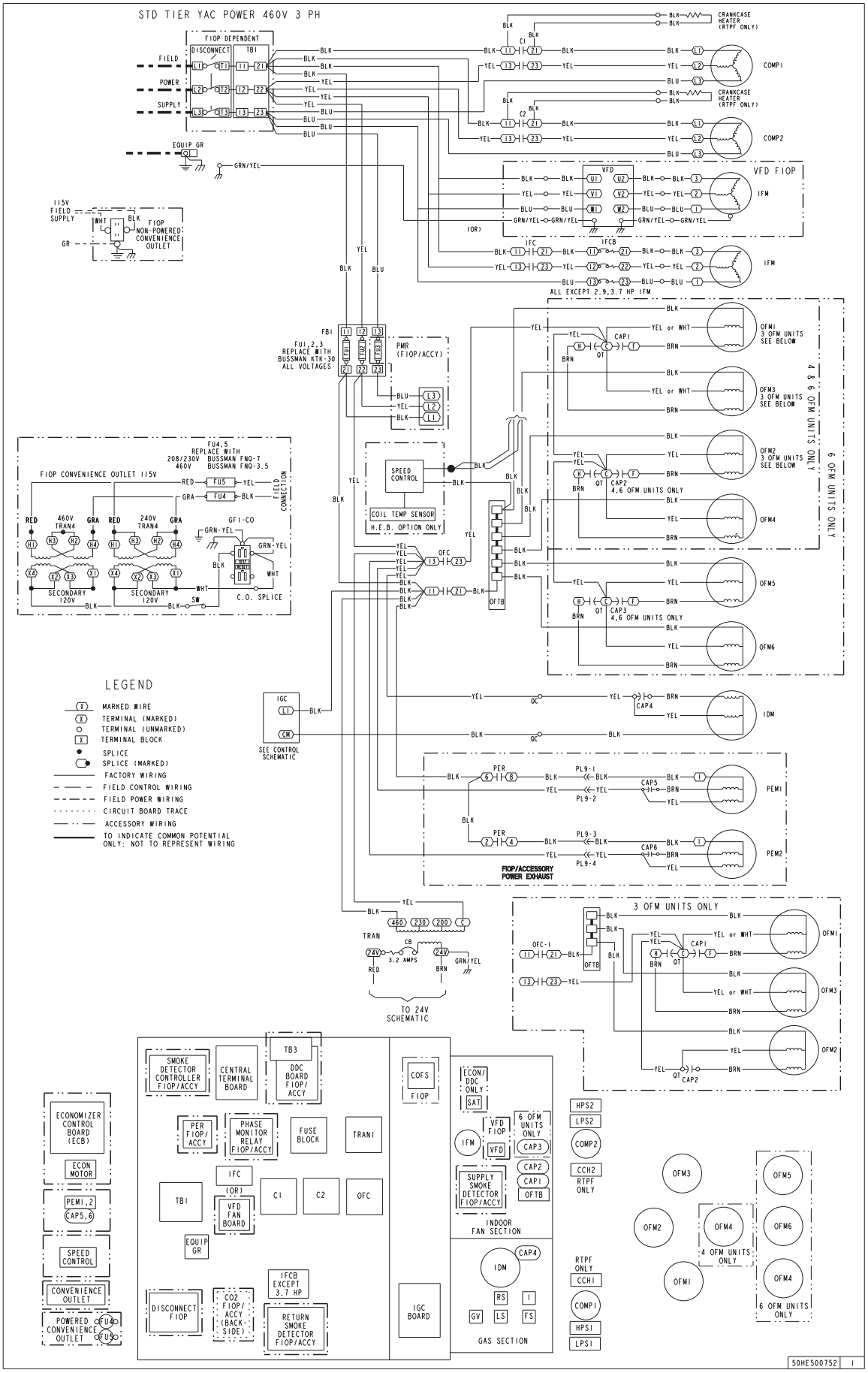

C12266

Fig. 75 – 48TC D17 – D28 Power Diagram – 460–3–60

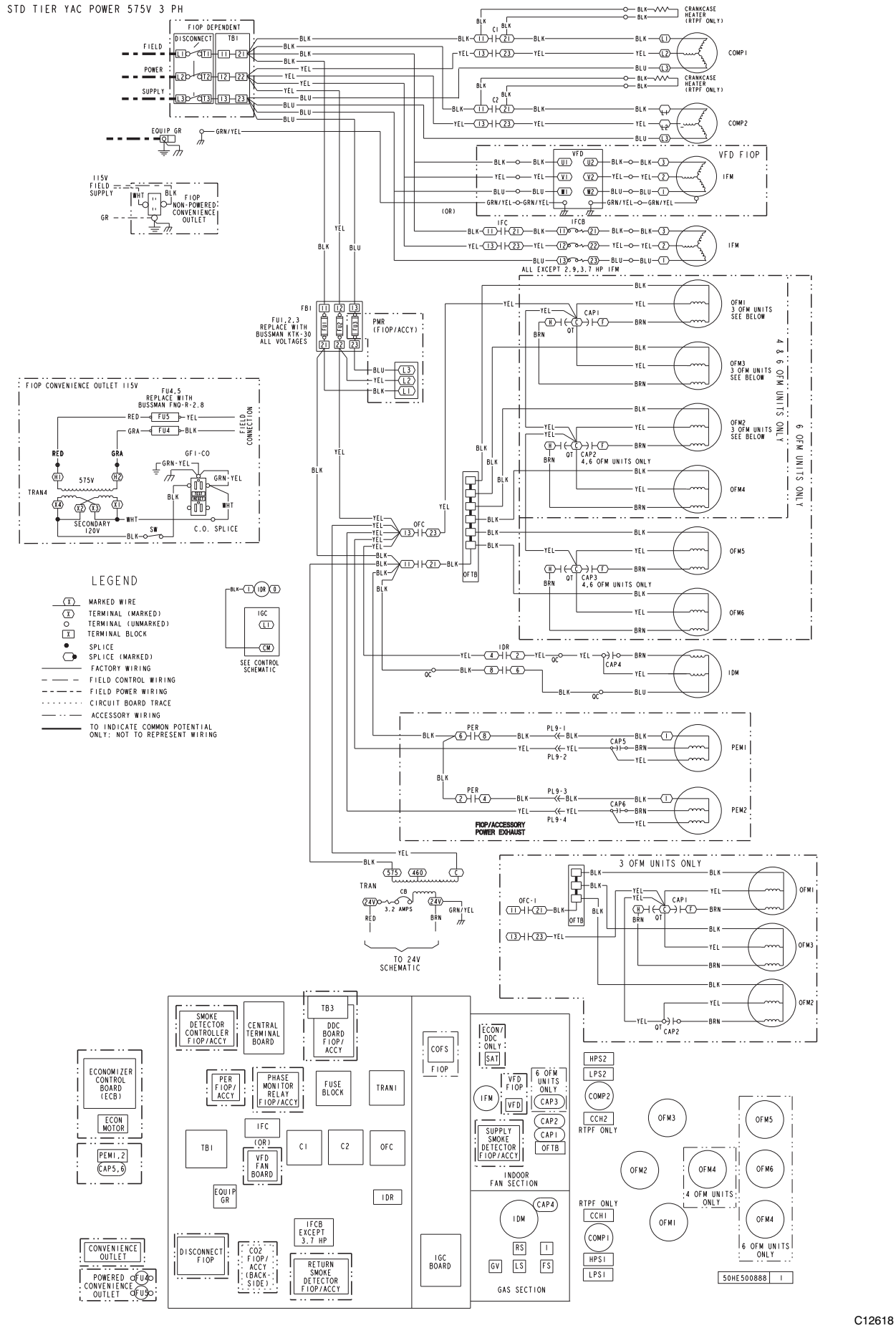

Fig. 76 – 48TC D17 – D28 Power Diagram – 575–3–60

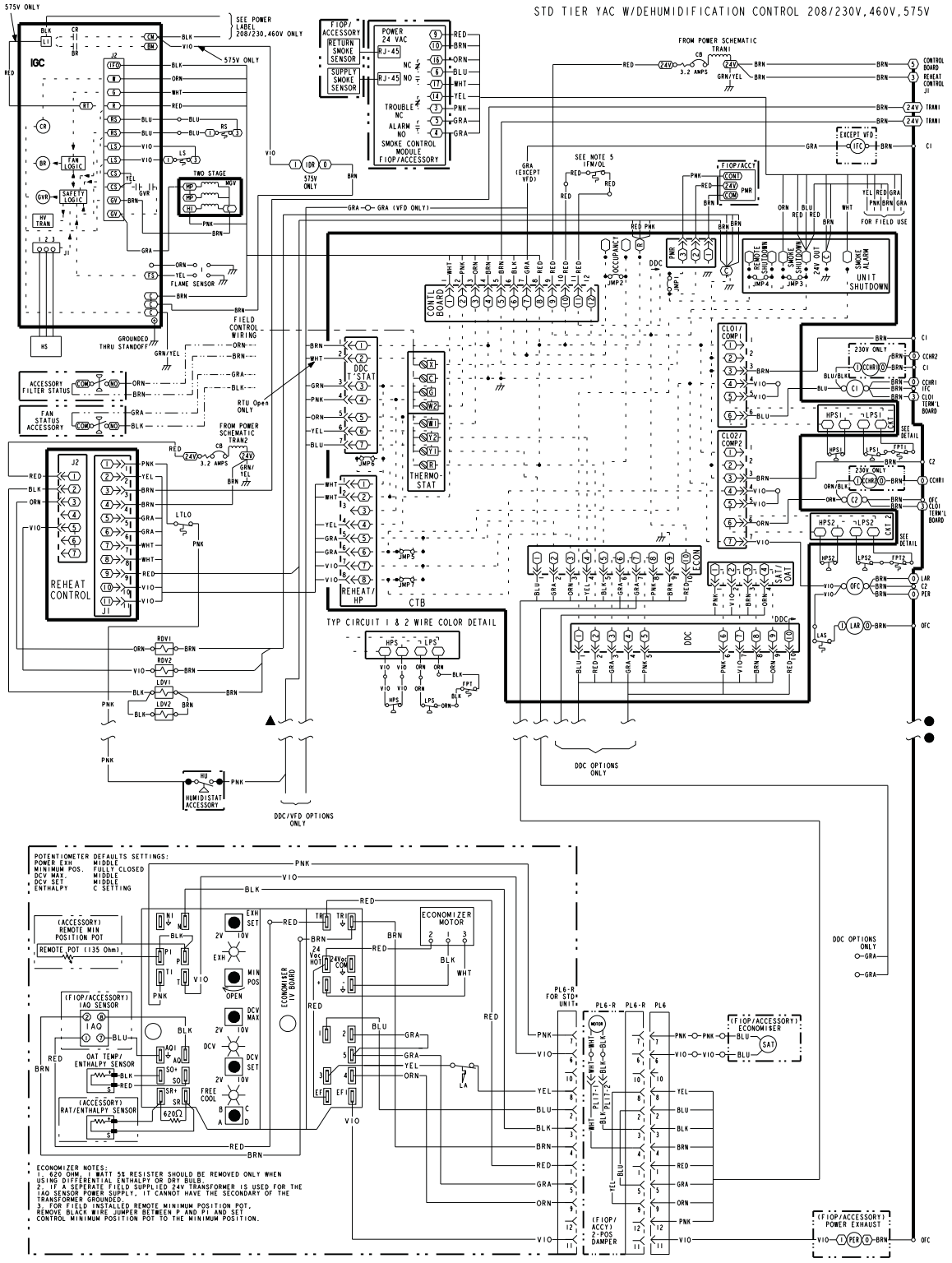

NOTES

1. IF ANY OF THE ORIGINAL WIRE FURNISHED MUST BE REPLACED, IT MUST BE REPLACED WITH TYPE 90 C WIRE OR ITS EQUIVALENT.
2. COMPRESSOR AND FAN MOTORS ARE THERMALLY PROTECTED. THREE PHASE MOTORS ARE PROTECTED AGAINST PRIMARY SINGLE PHASING CONDITIONS.
3. 208/230V UNIT TRAN IS WIRED FOR 230V UNIT. IF UNIT IS TO BE RUN WITH 208V POWER SUPPLY DISCONNECT BLK WIRE FROM 230V TAP AND CONNECT TO 200V TAP.
4. USE COPPER CONDUCTOR ONLY.
5. IFM OL IS NOT USED ON ALL MODELS. WHEN NOT USED, RED LEADS ARE CONNECTED TOGETHER.

C	CONTACTOR,COMPRESSOR
CAP	CAPACITOR
CB	CIRCUIT BREAKER
CCH	CRANKCASE HEATER
CCHR	CRFANKCASE HEATER RELAY
CCN	CARRIER COMFORT NETWORK
CMP SAFE	COMPRESSOR SAFEETY
COFS	CONDENSATE OVERFLOW SWITCH
COMP	COMPRESSOR MOTOR
CTB	CENTRAL TERMINAL BOARD
DDC	DIRECT DIGITAL CONTROL
FIOP	FACTORY INSTALLED OPTION
FPT	FREEZE PROTECTION THERMOSTAT
FSD	FIRE SHUT DOWN
FU	FUSE
GND	GROUND
GVR	GAS VALVE RELAY
HPS	HIGH PRESSURE SWITCH
HS	HALL EFFECT SENSOR
HU	HUMIDISTAT
I	IGNITOR
IAQ	INDOOR AIR QUALITY SENSORS
IDM	INDUCED DRAFT MOTOR
IDR	INDUCED DRAFT RELAY
IFC	INDOOR FAN CONTACTOR
IFM	INDOOR FAN MOTOR
IGC	INTEGRATED GAS CONTROL
IRH	INDOOR RELATIVE HUMIDITY
LA	LOW AMBIENT LOCKOUT
LAR	LOW AMBIENT RELAY
LAS	LOW AMBIENT SWITCH
LDV	LIQUID DIVERTER VALVE (3-WAY)
LOOP PWR	CURRENT LOOP POWER
LPS	LOW PRESSURE SWITCH
LSM	LIMIT SWITCH (MANUAL RESET)
LTLO	LOW TEMPERATURE LOCK OUT
MGV	MAIN GAS VALVE
OAQ	OUTDOOR AIR QUALITY
OAT	OUTDOOR AIR TEMP. SEN
OFC	OUTDOOR FAN CONTACTOR
OFM	OUTDOOR FAN MOTOR
OFTB	OUTDOOR FAN TERMINAL BLOCK
OLR	OVERLOAD RELAY
PER	POWER EXHAUST RELAY
PL	PLUG ASSEMBLY
POT	POTENTIOMETER
PMR	PHASE MONITOR RELAY
QT	QUADRUPLE TERMINAL
R	RELAY
RAT	RETURN AIR TEMP. SEN
RDV	REHEAT DISCHARGE VALVE
RMT OCC	REMOTE OCCUPANCY
RS	ROLLOUT SWITCH
RTPF	ROUND TUBE PLATE FIN CONDENSER COIL
SAT	SUPPLY AIR TEMP. SENSOR
SEN	SENSOR
SET	SET POINT OFFSET
SFS	SUPPLY FAN STATUS
TDR	TIME DELAY RELAY
TRAN	TRANSFORMER
VFD	VARIABLE FREQUENCY DRIVE

50HE502181 E

C14061

Fig. 77 – 48TC D17 – D28 Control Diagram with Humidi–MiZer®

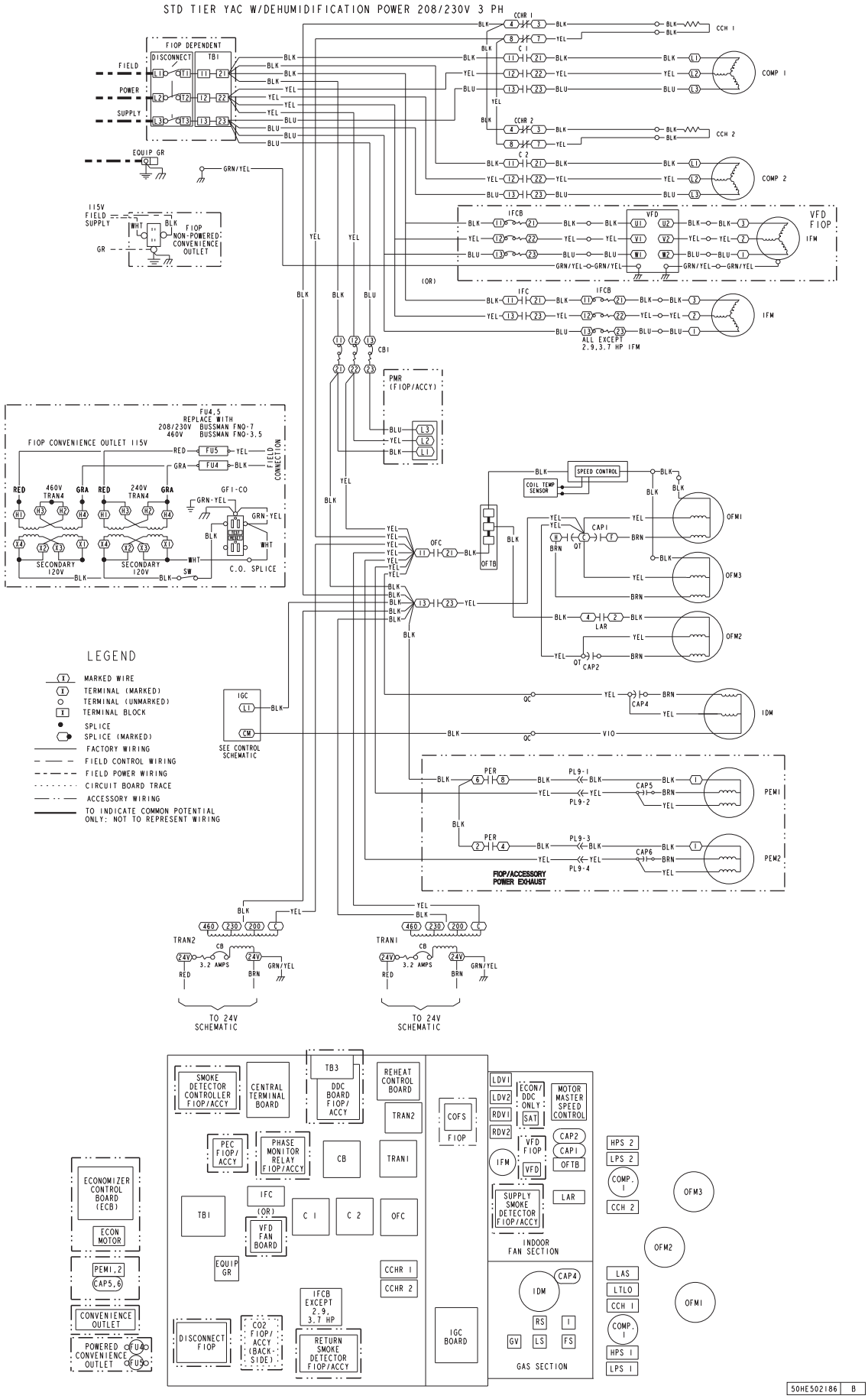

Fig. 78 – 48TC D17 – D28 Power Diagram 208/230–3–60 with Humidi–MiZer®

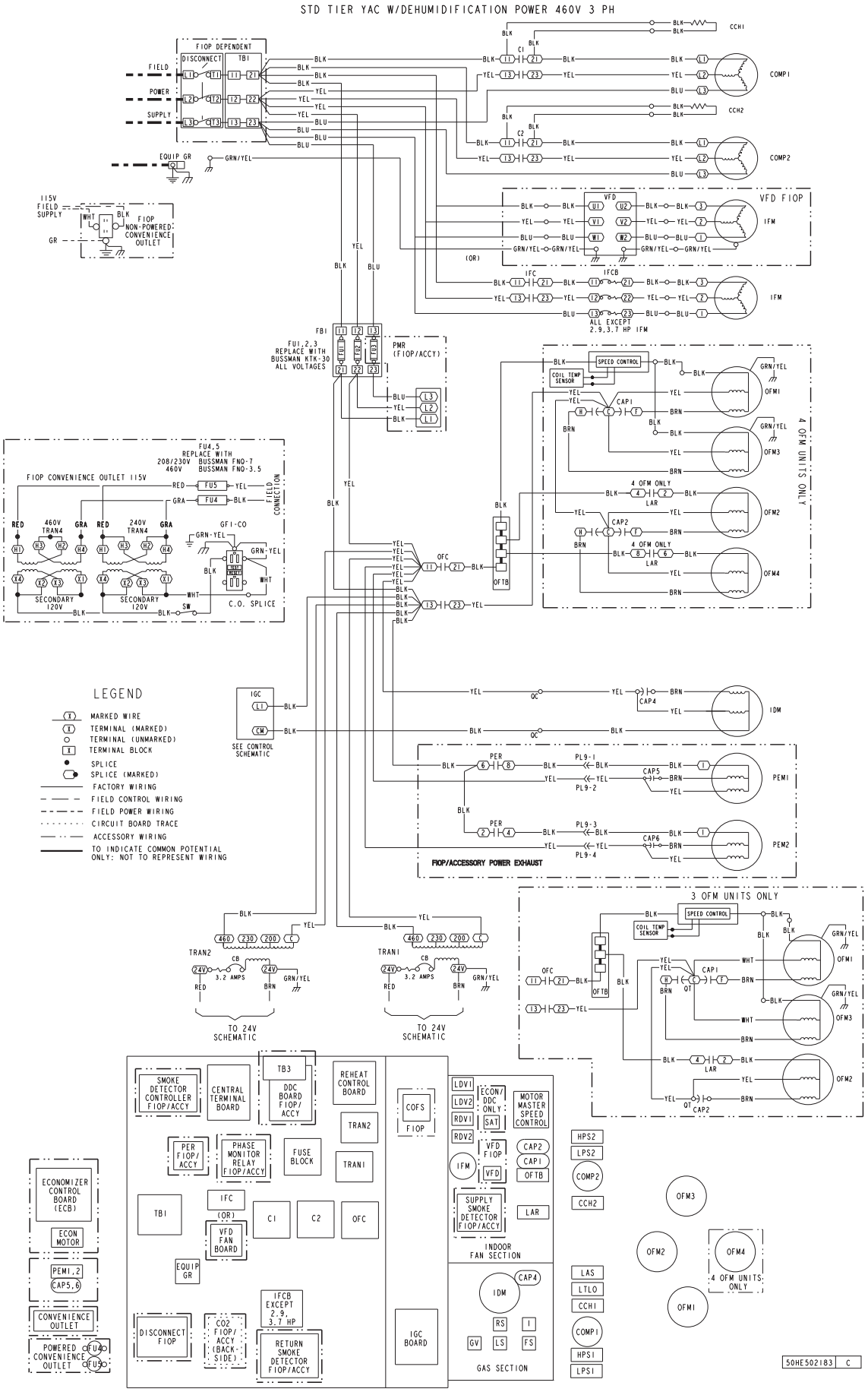

Fig. 79 – 48TC D17 – D28 Power Diagram 460–3–60 with Humidi–MiZer®

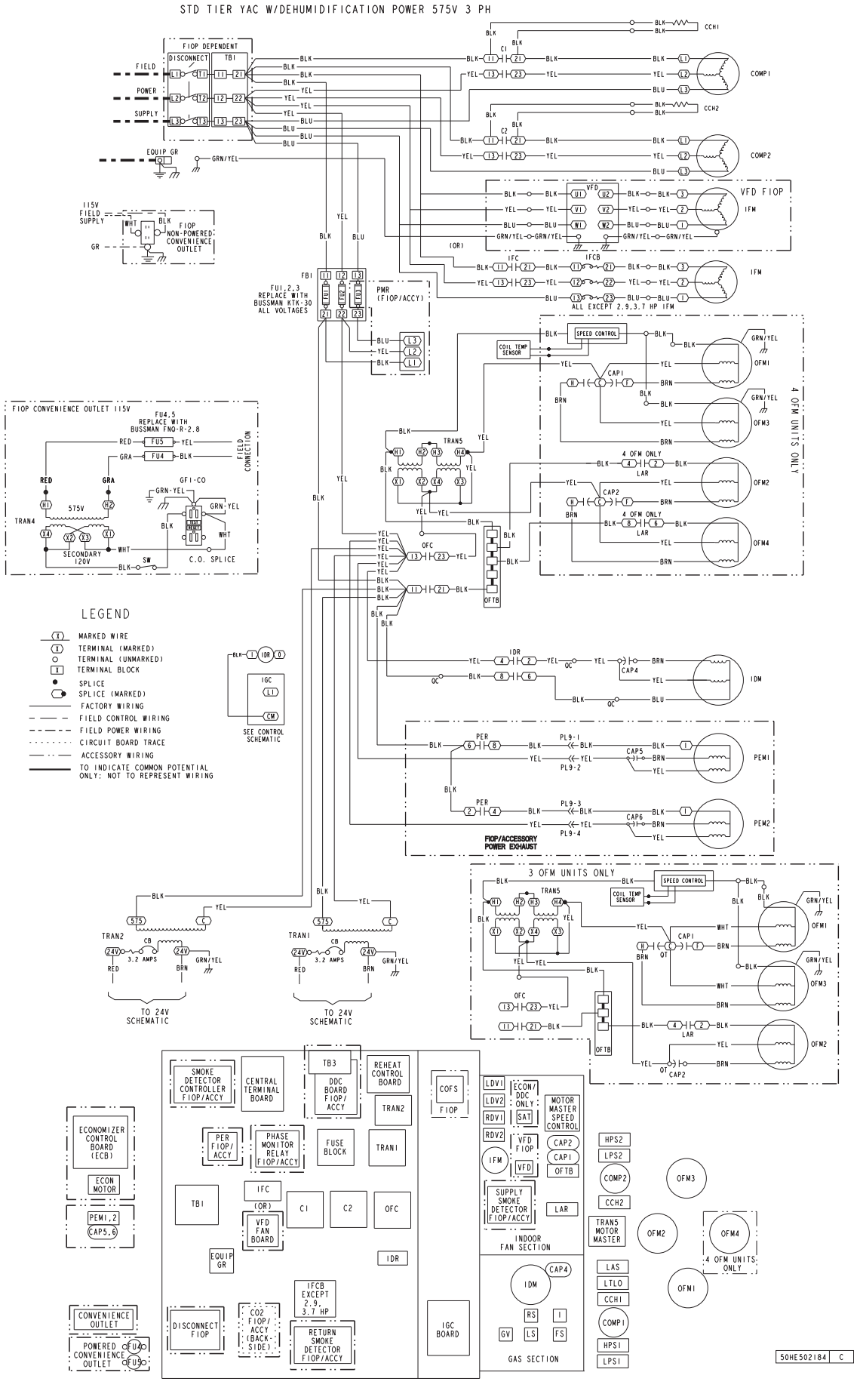

Fig. 80 – 48TC D17 – D28 Power Diagram 575–3–60 with Humidi–MiZer®

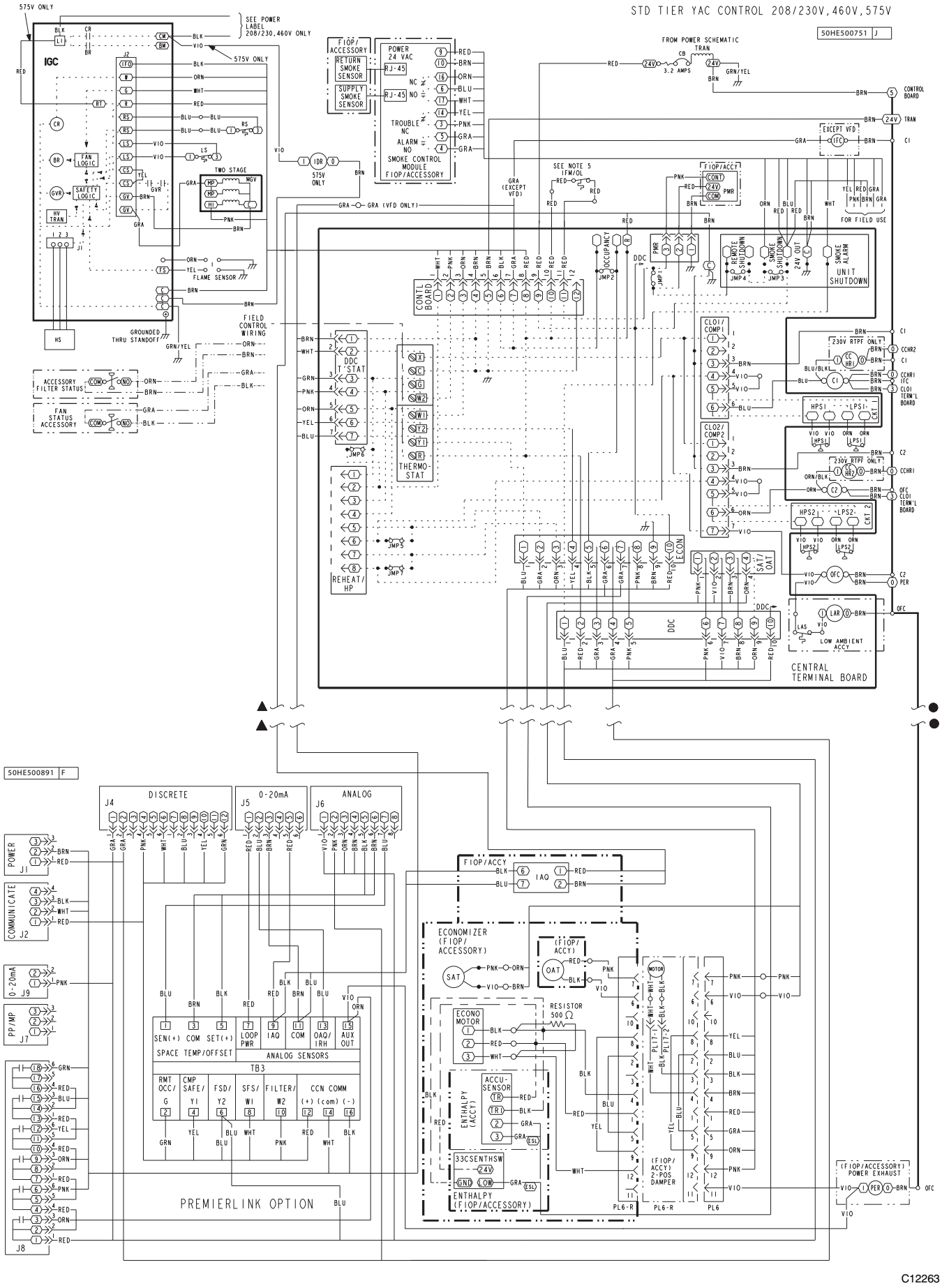

Fig. 81 – PremierLink™ System Control Wiring Diagram

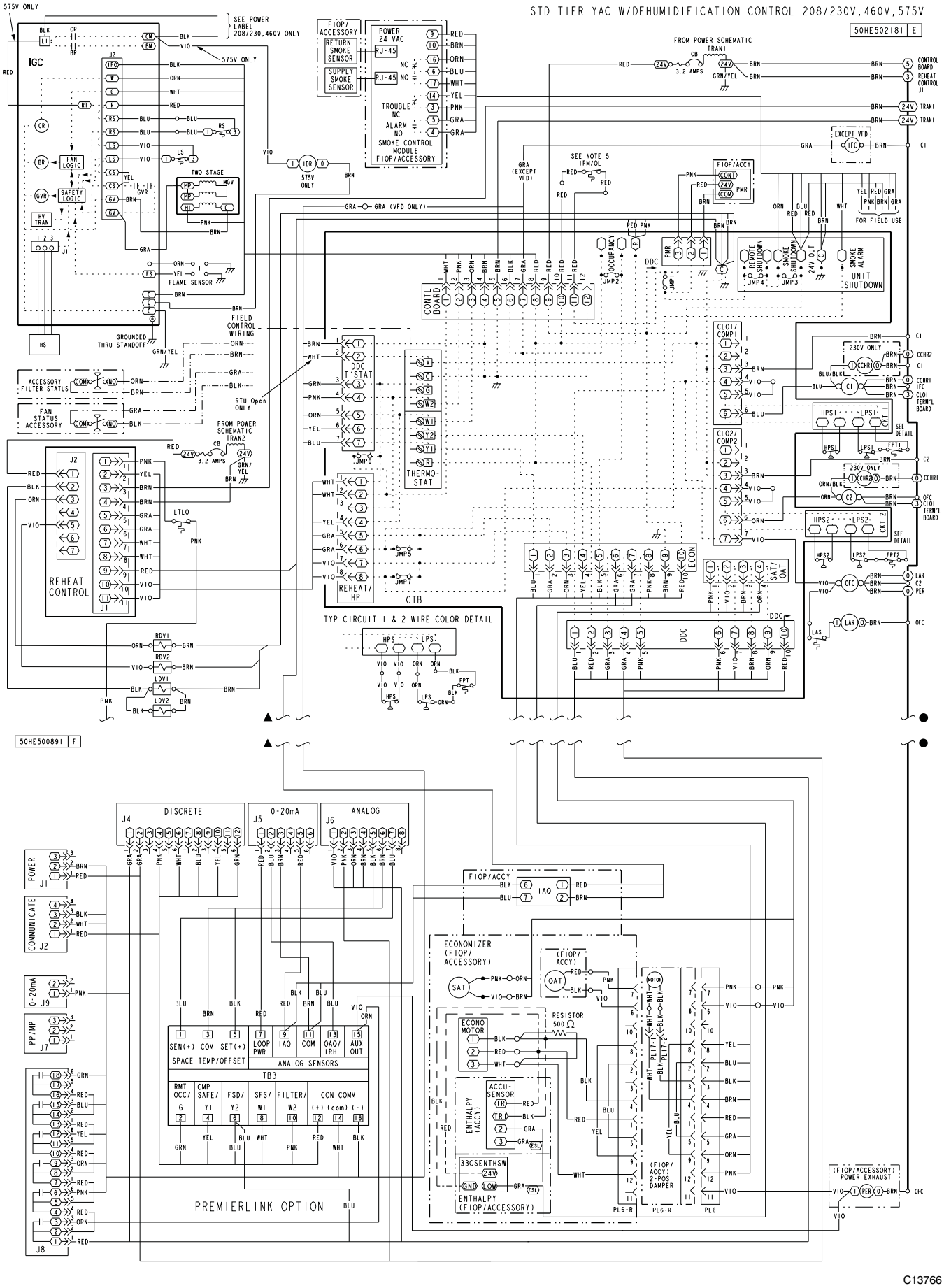

Fig. 82 – PremierLink™ System Control Wiring Diagram with Humidi–MiZer®

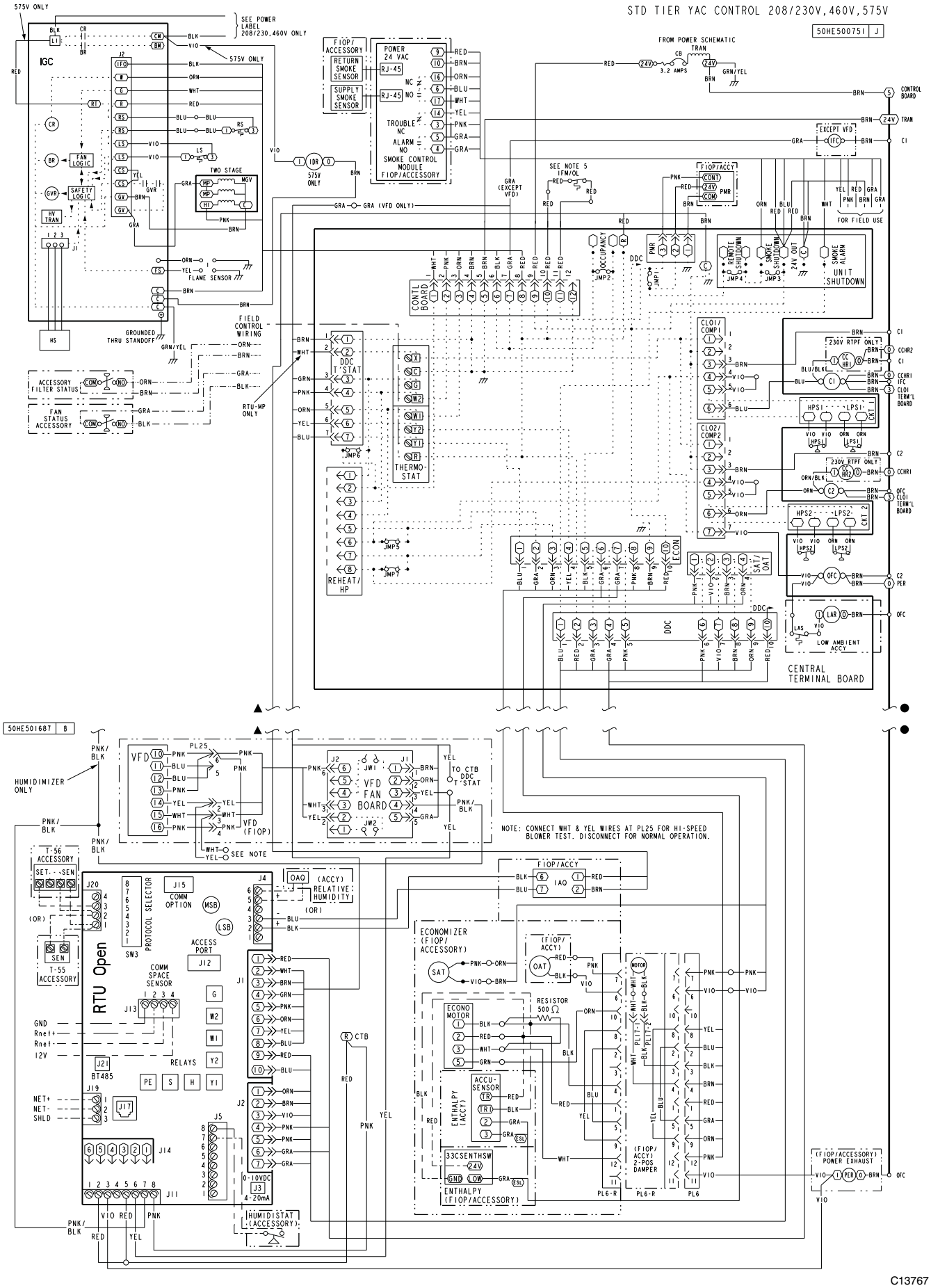

Fig. 83 – RTU–OPEN Wiring Diagram

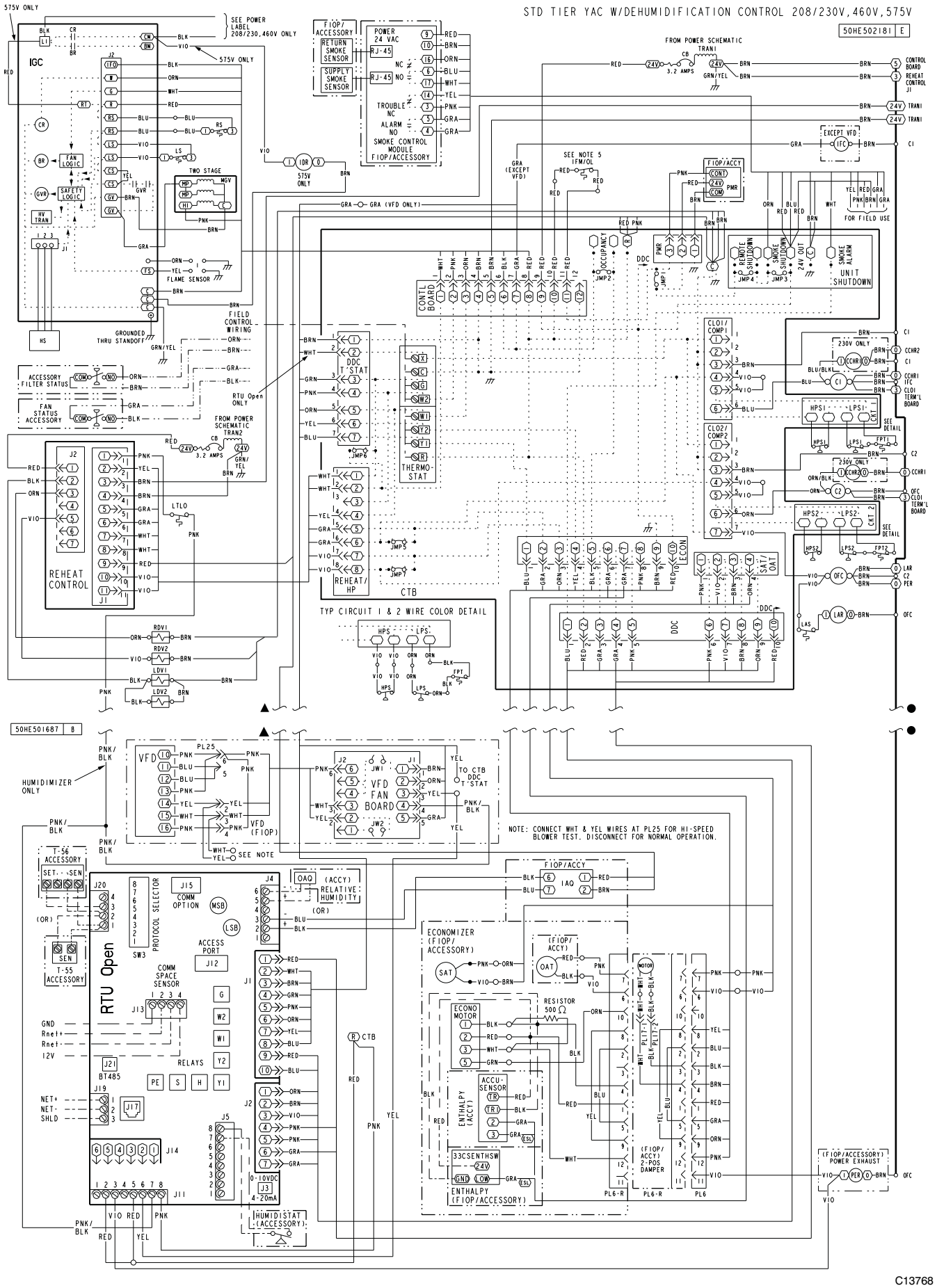

Fig. 84 – RTU–OPEN Wiring Diagram with Humidi–MiZer®

APPENDIX V. MOTORMASTER SENSOR LOCATIONS

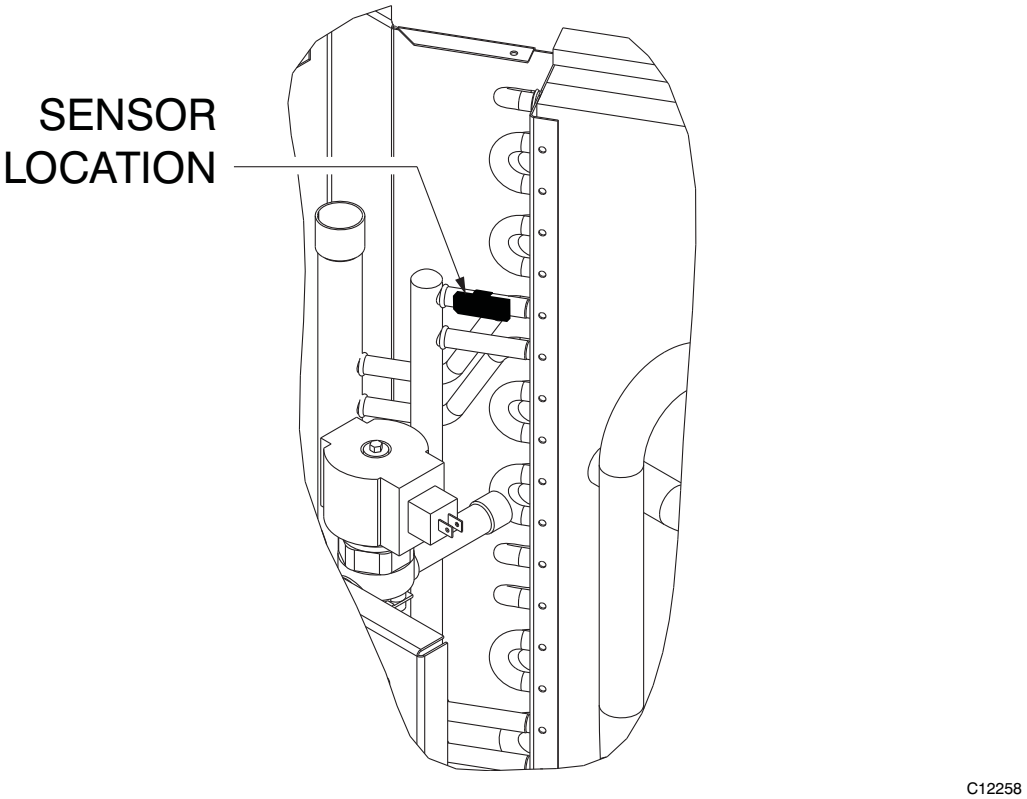

Fig. 85 – Motormaster Sensor Locations – D17, D20, and D24

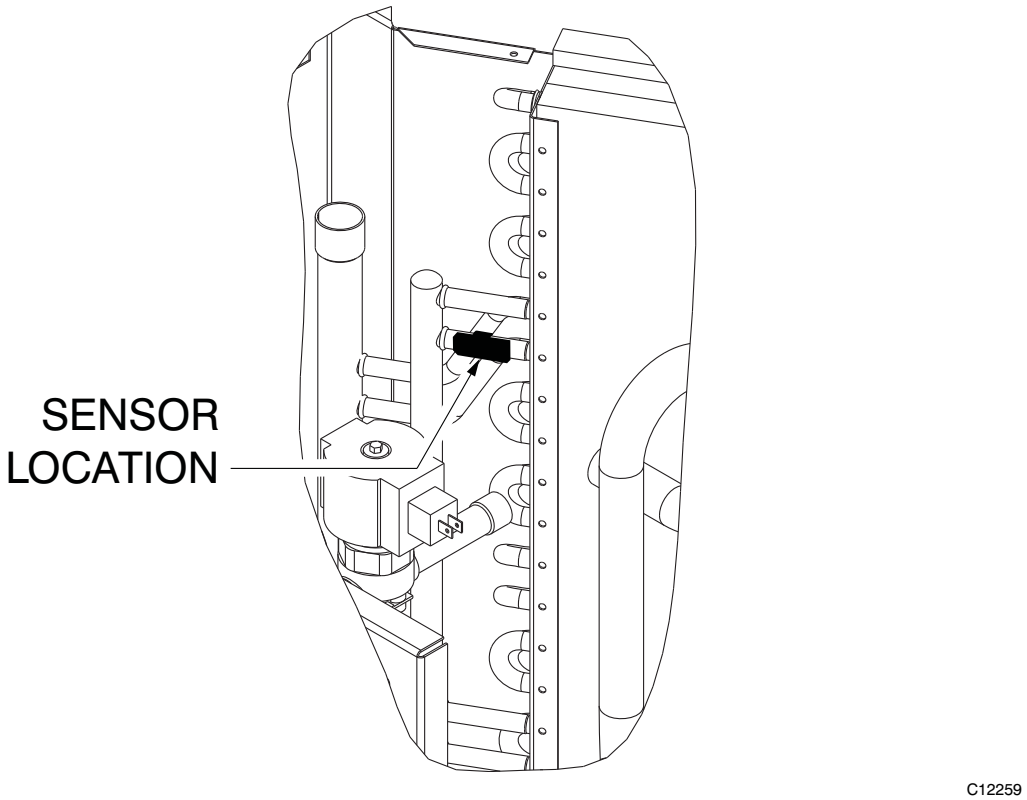

Fig. 86 – Motormaster Sensor Location – D28

Copyright 2015 Carrier Corp. • 7310 W. Morris St. • Indianapolis, IN 46231
Edition Date: 12/15

Catalog No: 48TC—17—30—01SM

Manufacturer reserves the right to change, at any time, specifications and designs without notice and without obligations.

Replaces: NEW

UNIT START-UP CHECKLIST

I. PRELIMINARY INFORMATION:

MODEL NO.:_____ SERIAL NO: _____

DATE:_____ TECHNICIAN: _____

II. PRE-START-UP (insert check mark in box as each item is completed):

- ☐ VERIFY THAT JOBSITE VOLTAGE AGREES WITH VOLTAGE LISTED ON RATING PLATE
- ☐ VERIFY THAT ALL PACKAGING MATERIALS HAVE BEEN REMOVED FROM UNIT
- ☐ REMOVE ALL SHIPPING HOLD DOWN BOLTS AND BRACKETS PER INSTALLATION INSTRUCTIONS
- ☐ VERIFY THAT CONDENSATE CONNECTION IS INSTALLED PER INSTALLATION INSTRUCTIONS
- ☐ VERIFY THAT FLUE HOOD IS INSTALLED
- ☐ CHECK REFRIGERANT PIPING FOR INDICATIONS OF LEAKS; INVESTIGATE AND REPAIR IF NECESSARY
- ☐ CHECK GAS PIPING FOR LEAKS
- ☐ CHECK ALL ELECTRICAL CONNECTIONS AND TERMINALS FOR TIGHTNESS
- ☐ CHECK THAT RETURN (INDOOR) AIR FILTERS ARE CLEAN AND IN PLACE
- ☐ VERIFY THAT UNIT INSTALLATION IS LEVEL
- ☐ CHECK FAN WHEEL AND PROPELLER FOR LOCATION IN HOUSING/ORIFICE AND SETSCREW TIGHTNESS
- ☐ CHECK TO ENSURE THAT ELECTRICAL WIRING IS NOT IN CONTACT WITH REFRIGERANT LINES OR SHARP METAL EDGES
- ☐ VERIFY PULLEY ALIGNMENT AND BELT TENSION PER INSTALLATION INSTRUCTIONS

III. START-UP (REFER TO UNIT SERVICE/MAINTENANCE MANUAL FOR INSTRUCTIONS)

ELECTRICAL

SUPPLY VOLTAGE	L1-L2	_____	L2-L3	_____	L3-L1	_____
CIRCUIT 1 COMPRESSOR AMPS	L1	_____	L2	_____	L2	_____
CIRCUIT 2 COMPRESSOR AMPS	L1	_____	L2	_____	L2	_____
INDOOR FAN AMPS	L1	_____	L2	_____	L2	_____
OUTDOOR FAN AMPS	NO. 1		NO. 2			

TEMPERATURES

OUTDOOR-AIR TEMPERATURE	_____	DB	_____	WB
RETURN-AIR TEMPERATURE	_____	DB	_____	WB
COOLING SUPPLY AIR	_____	DB	_____	WB
GAS HEAT SUPPLY AIR		DB		

PRESSURES

GAS INLET PRESSURE	_____	IN. WG		
GAS MANIFOLD PRESSURE	_____	IN. WG (LOW FIRE)	_____	IN. WG (HI FIRE)
REFRIGERANT SUCTION, CIRCUIT 1	_____	PSIG	_____	°F
REFRIGERANT SUCTION, CIRCUIT 2	_____	PSIG	_____	°F
REFRIGERANT DISCHARGE, CIRCUIT 1	_____	PSIG	_____	°F
REFRIGERANT DISCHARGE, CIRCUIT 2		PSIG		°F

- ☐ VERIFY THAT 3–PHASE FAN MOTOR AND BLOWER ARE ROTATING IN CORRECT DIRECTION
- ☐ VERIFY THAT 3–PHASE SCROLL COMPRESSOR IS ROTATING IN CORRECT DIRECTION
- ☐ VERIFY REFRIGERANT CHARGE USING CHARGING CHARTS

GENERAL

- ☐ SET ECONOMIZER MINIMUM VENT AND CHANGEOVER SETTINGS TO MATCH JOB REQUIREMENTS (IF EQUIPPED)

Copyright 2015 Carrier Corp. • 7310 W. Morris St. • Indianapolis, IN 46231

Edition Date: 12/15

Catalog No: 48TC—17—30—01SM

Manufacturer reserves the right to change, at any time, specifications and designs without notice and without obligations.

Replaces: 48TC-04SM