48TC
Gas Heat/Electric Cooling Packaged Rooftop 3 to 15 Nominal Tons

Carrier
turn to the experts

Product Data

WeatherMaker®

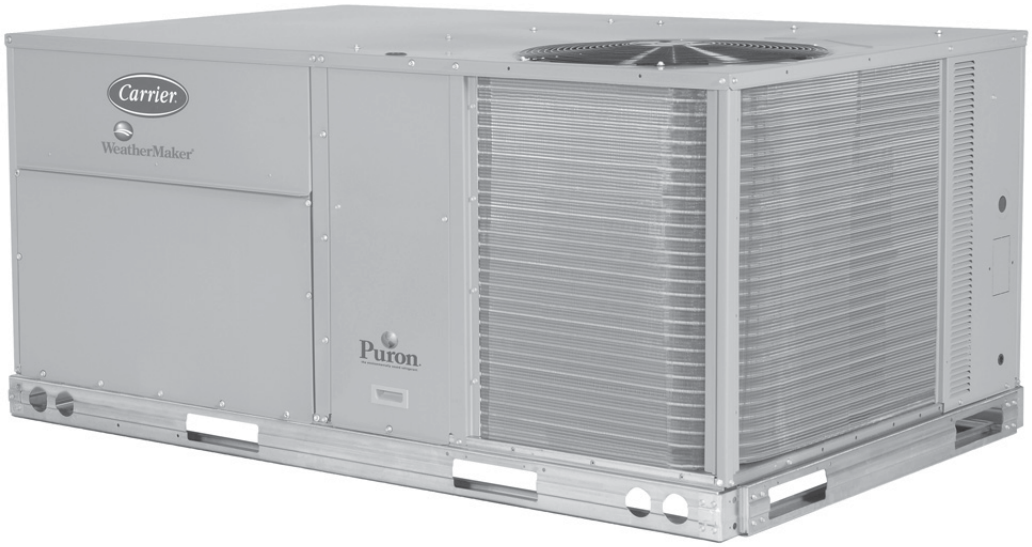

C08613

Puron

ASHRAE 90.1 COMPLIANT

TABLE OF CONTENTS

	PAGE
FEATURES AND BENEFITS	3
MODEL NUMBER NOMENCLATURE	4
FACTORY OPTIONS AND/OR ACCESSORIES	5
AHRI COOLING RATING TABLES	9
HEAT RATING TABLE	10
SOUND PERFORMANCE TABLE	11
PHYSICAL DATA	13
CURBS & WEIGHTS DIMENSIONS	19
APPLICATION DATA	31
COOLING TABLES	35
STATIC PRESSURE ADDERS	56
FAN PERFORMANCE	60
ELECTRICAL INFORMATION	80
SEQUENCE OF OPERATION	89
GUIDE SPECIFICATIONS	90

Carrier®

Turn to the Experts.℠

The Carrier rooftop unit (RTU) was designed by customers for customers. With “no-strip screw” collars, handled access panels, and more we’ve made your unit easy to install, easy to maintain and easy to use.

Easy to install:

All WeatherMaker® units are field-convertible to horizontal air flow which makes it easy to adjust to unexpected job site complications. Lighter units make easy replacement. Most Carrier 48TC rooftops fit on existing Carrier curbs dating back to 1989. Also, our large control box gives you room to work and room to mount Carrier accessory controls.

Easy to maintain:

Easy access handles by Carrier provide quick and easy access to all normally serviced components. Our “no-strip” screw system has superior holding power and guides screws into position while preventing the screw from stripping the unit’s metal. Take accurate pressure readings by reading condenser pressure with panels on. Simply remove the black, composite plug, route your gauge line(s) through the hole, and connect them to the refrigeration service valve(s).

Easy to use:

The newly designed, central terminal board by Carrier puts all your connections and troubleshooting points in one convenient place, standard. Most low voltage connections are made to the same board and make it easy to find what you’re looking for and easy to access it. Carrier rooftops have high and low pressure switches, a filter drier, and 2-in (51mm) filters standard.

FEATURES AND BENEFITS

- Single cooling stage models are available from 3 - 10 ton.
- Two cooling stage models are available from 7.5 - 15 ton.
- SEER up to 13.0.
- EER's up to 11.1.
- IEER's up to 11.8 with single speed indoor fan motor and up to 12.8 with 2-speed/VFD indoor fan motor.
- Up to 28% lighter than similar industry units. Lighter rooftops make easier replacement jobs.
- Utility connections are the same because 3 - 12.5 ton units fit on existing Carrier rooftop curbs. This saves time and money on replacement jobs.
- Standardized components and layout. Standardized components and controls make service and stocking parts easier.
- Scroll compressors on all units. This makes service, stocking parts, replacement, and troubleshooting easier.
- Field convertible airflow (3 - 15 ton). Being able to convert a unit from vertical airflow to horizontal makes it easy to overcome job site complications. 15 ton models require a simple supply duct cover to field convert from factory vertical to horizontal.
- Easy-adjust, belt-drive motor available.
- Provisions for bottom or side condensate drain.
- Capable of thru-the-base or thru-the-curb gas line routing.
- Single-point gas / electrical connection.
- Sloped, composite drain pan sheds water; and won't rust.
- Standardized controls & control box layout. Standardized components & controls make stocking parts & service easier.
- Tool-less filter access door.
- Clean, large, easy to use control box.
- Color-coded wiring.
- Large, laminated wiring and power wiring drawings which are affixed to unit make troubleshooting easy.
- Single, central terminal board for test and wiring connections.
- Fast-access, handled, panels for easy access on normally accessed service panels.
- "No-strip" screw system guides screws into the panel & captures them tightly without stripping the screw, the panel, or the unit.
- Mechanical cooling (115°F to 40°F or 46°C to 4°C) standard on all models. Winter Start Kit allows cooling operation down to 25°F (-4°C) and MotorMaster to -20°F (-29°C).
- High efficiency, gas heat with induced-draft flue exhaust design.
- Induced draft motor ensures no flue gas can escape into the indoor air stream.
- Carrier designed naturally draining heat exchanger, unlike positive pressure heat exchangers, do not need to be periodically, manually drained. This saves labor and maintenance expense.
- 2-in (51mm) disposable filters on all units.
- Refrigerant filter-drier on each circuit.
- Each circuit is protected with a high and low pressure switch.
- Many factory-installed options ranging from air management economizers, 2 position dampers, plus convenience outlets, disconnect switches and smoke detectors.
- Standard (parts only) Warranty: 10 yr. aluminized heat exchanger, 5 yr. compressor, 3 yr. Novation condenser coil, 1 yr. parts.
- Factory-installed Humidi-MiZer® adaptive dehumidification system on all sizes with round tube / plate fin condenser coils, includes MotorMaster I controller.
- Optional Staged Air Volume (SAV) system utilizes a Variable Frequency Drive (VFD) to automatically adjust the indoor fan motor speed between cooling stages. Available on 2-stage cooling models 08-16 with electromechanical controls or RTU Open.

MODEL NUMBER NOMENCLATURE

1	2	3	4	5	6	7	8	9	10	11	12	13	14	15	16	17	18
4	8	T	C	D	A	0	4	A	1	A	5	-	0	A	0	A	0

Unit Heat Type
48 – Gas Heat Packaged Rooftop

Series/Model
TC – Standard Efficiency

Heat Size
D – Low heat
E – Medium Heat
F – High Heat
L – Low NO_x, Low Heat
M – Low NO_x, Medium Heat
N – Low NO_x, High Heat
S – Stainless Steel, Low Heat
R – Stainless Steel, Medium Heat
T – Stainless Steel, High Heat

Refrig. Systems Options
A - Standard One Stage Cooling Models
B – Standard One Stage Cooling Models with Humidi-MiZer (04-07 models only)
D – Two Stage Cooling Models 08-16
E – Two Stage Cooling Models 08-16 with Al/Cu condenser Coils and with Humidi-MiZer

Cooling Tons
04 - 3 ton
05 - 4 ton
06 - 5 ton
07 - 6 ton
08 – 7.5 ton
09 – 8.5 ton
12 – 10 ton
14 – 12.5 ton
16 – 15 Tons

Sensor Options
A = None
B = RA Smoke Detector
C = SA Smoke Detector
D = RA + SA Smoke Detector
E = CO2 Sensor
F = RA Smoke Detector and CO2 Sensor
G = SA Smoke Detector and CO2 Sensor
H = RA + SA Smoke Detector and CO2 Sensor

Indoor Fan Options
1 = Standard Static Option
2 = Medium Static Option
3 = High Static Option
C = High Static Option w/ High Effy Motor (Size 16 Only)

Voltage
1 = 575/3/60
3 = 208-230/1/60
5 = 208-230/3/60
6 = 460/3/60

Design Revision
Factory Assigned

Base unit controls
0 = Electro Mechanical controls. Can be used with W7212 EconoMi$er IV (Non-Fault Detection and Diagnostic)
1 = PremierLink Controller
2 = RTU Open Multi-Protocol Controller
6 = Electro Mechanical controls. Can be used with W7220 EconoMi$er X (with Fault Detection and Diagnostic)

Intake / Exhaust Options
A = None
B = Temperature Economizer w/ Barometric Relief
F = Enthalpy Economizer w/ Barometric Relief
K = 2-Position Damper
U = Temp Ultra Low Leak Economizer w/Baro Relief
W = Enthalpy Ultra Low Leak Econo w/Baro Relief

Service Options
0 = None
1 = Unpowered Convenience Outlet
2 = Powered Convenience Outlet
3 = Hinged Panels
4 = Hinged Panels, Unpowered Convenience Outlet
5 = Hinged Panels, Powered Convenience Outlet

Electrical Options
A = None
C = Non-Fused Disconnect
D = Thru-The-Base Connections
F = Non-Fused Disconnect and Thru-The-Base Connections
G = 2-Speed Indoor Fan (VFD) Controller
J = 2 Speed Fan Controller (VFD) and Non-Fused Disconnect
K = 2 Speed Fan Controller (VFD) and Thru-The Base Connections
M = 2 Speed Fan Controller (VFD) with Non-Fused Disconnect and Thru-The Base Connections

Packaging and Seismic Compliant
0 = Standard
1 = LTL
3 = CA Seismic Compliant
4 = LTL and CA Seismic Compliant Label

Coil Options For Round Tube/Plate Fin Condenser Coil Models Only (outdoor-indoor-hailguard)
A = Al/Cu - Al/Cu
B = Precoat Al/Cu - Al/Cu
C = E-coat Al/Cu - Al/Cu
D = E-coat Al/Cu - E-coat Al/Cu
E = Cu/Cu - Al/Cu
F = Cu/Cu - Cu/Cu
M = Al/Cu - Al/Cu – Louvered Hail Guards
N = Precoat Al/Cu - Al/Cu – Louvered Hail Guards
P = E-coat Al/Cu - Al/Cu – Louvered Hail Guards
Q = E-coat Al/Cu - E-coat Al/Cu – Louvered Hail Guards
R = Cu/Cu - Al/Cu – Louvered Hail Guards
S = Cu/Cu - Cu/Cu – Louvered Hail Guards

Coil Options For All Aluminum – Novation Condenser Coil Models Only (outdoor-indoor-hailguard)
G = Al/Al – Al/Cu
H = Al/Al – Cu/Cu
J = Al/Al – E-coat Al/Cu
K = E-coat Al/Al – Al/Cu
L = E-coat Al/Al – E-coat Al/Cu
T = Al/Al – Al/Cu, Louvered Hail Guards
U = Al/Al – Cu/Cu, Louvered Hail Guards
V = Al/Al – E-coat Al/Cu, Louvered Hail Guards
W = E-coat Al/Al – Al/Cu, Louvered Hail Guards
X = E-coat Al/Al – E-coat Al/Cu, Louvered Hail Guards

Note: On single phase (-3 voltage code) models, the following are not available as a factory installed option:
- Humidi-Mizer
- Coated Coils or Cu Fin Coils
- Louvered Hail Guards
- Economizer or 2 Position Damper
- Powered 115 Volt Convenience Outlet

Not all possible options can be displayed above.

C13211B

Table 1 – FACTORY-INSTALLED OPTIONS AND FIELD-INSTALLED ACCESSORIES

CATEGORY	ITEM	FACTORY INSTALLED OPTION	FIELD INSTALLED ACCESSORY
Cabinet	Thru–the–base electrical or gas–line connections	X	X
	Supply Duct Cover (16 size only)		X
	California Seismic Compliant Labeling	X	
	Hinged Access Panels	X	
Coil Options	Cu/Cu indoor and/or outdoor coils[1, 6]	X	
	Pre–coated outdoor coils[1, 6]	X	
	Premium, E–coated outdoor coils[1, 6]	X	
Humidity Control	Humidi–MiZer Adaptive Dehumidification System[6]	X	
Condenser Protection	Condenser coil hail guard (louvered design)[6]	X	X
Controls	Thermostats, temperature sensors, and subbases		X
	PremierLink DDC communicating controller	X	X
	RTU Open–protocol controller	X	
	Smoke detector (supply and/or return air)	X	
	Time Guard II compressor delay control circuit		X
	Phase Monitor		X
Economizers & Outdoor Air Dampers	EconoMi$er IV for electro–mechanical controls – Non FDD (Standard air leak damper models)[6, 7]	X	X
	EconoMi$er2 for DDC controls, complies with FDD (Standard and Ultra Low Leak air damper models)[6, 8]	X	X
	Motorized 2 position outdoor air damper[6]	X	X
	Manual outdoor air damper (25% and 50%)		X
	Barometric relief[2]	X	X
	Power exhaust		X
	EconoMi$er X for electro–mechanical controls, complies with FDD. (Standard and Ultra Low Leak air damper models)[6, 7]	X	X
Economizer Sensors & IAQ Devices	Single dry bulb temperature sensors[3]	X	X
	Differential dry bulb temperature sensors[3]		X
	Single enthalpy sensors[3]	X	X
	Differential enthalpy sensors[3]		X
	Wall or duct mounted CO_2 sensor[3]		X
	Unit mounted CO_2 sensor[3]	X	
Gas Heat	Propane conversion kit		X
	Stainless steel heat exchanger	X	
	High altitude conversion kit		X
	Flue Shield (04–14 sizes only)		X
	Flue Discharge Deflector (04–14 sizes only)		X
Indoor Motor & Drive	Multiple motor and drive packages	X	
	Staged Air Vol (SAV) system w/VFD controller (2–stage cool only with electrical mechanical and RTU Open controls)	X	
	Display Kit for SAV system with VFD		X
Low Ambient Control	Winter start kit[4]		X
	Motormaster® head pressure controller[4]		X
Power Options	Convenience outlet (powered)[6]	X	
	Convenience outlet (un–powered)	X	
	Non–fused disconnect[5]	X	
	Disconnect Switch Bracket (16 size only)		X
Roof Curbs	Roof curb 14–in (356mm)		X
	Roof curb 24–in (610mm)		X

NOTES:
1. Novation coated coils only available with E–coat.
2. Included with economizer.
3. Sensors used to optimize economizer performance.
4. See application data for assistance.
5. Available on units with MOCP's of 80 amps or less.
6. Not available as factory installed option on single phase (208/230/1/60) models. Use field–installed accessory where available.
7. FDD (Fault Detection and Diagnostic) capability per California Title 24 section 120.2.
8. Models with RTU Open DDC controls comply with California Title 24 Fault Detection and Diagnostic (FDD). PremierLink is non FDD.

FACTORY OPTIONS AND/OR ACCESSORIES

Economizer

Economizers save energy, money and improve comfort levels in the conditioned space. They bring in fresh, outside air for ventilation; and provide cool outside air to cool your building. This also is the preferred method of low ambient cooling. When integrated with CO2 sensors, economizers can provide even more savings by coupling the ventilation air to only that amount required based on space occupancy. Economizers are available, installed and tested by the factory, with either enthalpy or temperature dry-bulb inputs. There are also models for electromechanical, direct digital controllers and single speed fan or 2-speed indoor fan motors. Additional sensors are available as accessories to optimize the economizer. Economizers include gravity controlled barometric relief that helps equalize building pressure and ambient air pressures. This can be a cost effective solution to prevent building pressurization. Economizers are available in Ultra Low Leak and standard low leak versions.

CO_2 Sensor

Improves productivity and saves money by working with the economizer to intake only the correct amount of outside air for ventilation. As occupants fill your building, the CO_2 sensor detects their presence through increasing CO_2 levels, and opens the economizer appropriately.

When the occupants leave, the CO_2 levels decrease, and the sensor appropriately closes the economizer. This intelligent control of the ventilation air, called Demand Control Ventilation (DCV) reduces the overall load on the rooftop, saving money.

Smoke Detectors

Trust the experts. Smoke detectors make your application safer and your job easier. Carrier smoke detectors immediately shut down the rooftop unit when smoke is detected. They are available, installed by the factory, for supply air, return air, or both.

Louvered Hail Guards

Sleek, louvered panels protect the condenser coil from hail damage, foreign objects, and incidental contact.

Convenience Outlet (powered or un-powered)

Reduce service and/or installation costs by including a convenience outlet in your specification. Carrier will install this service feature at our factory. Provides a convenient, 15 amp, 115v GFCI receptacle with “Wet in Use” cover. The “powered” option allows the installer to power the outlet from the line side of the disconnect or load side as required by code. The “un-powered” option is to be powered from a separate 115/120v power source.

Non-fused Disconnect

This OSHA-compliant, factory installed, safety switch allows a service technician to locally secure power to the rooftop.

Disconnect Switch Bracket

Provides a pre-engineered and sized mounting bracket for applications requiring a unit mounted fused and non-fused disconnect of greater than 100 amps. Bracket assures that no damage will occur to coils when mounting with screws and other fasteners (16 size only).

Power Exhaust with Barometric Relief

Superior internal building pressure control. This field installed accessory may eliminate the need for costly, external pressure control fans.

PremierLink, DDC Controller

This CCN controller regulates your rooftop’s performance to tighter tolerances and expanded limits, as well as facilitates zoning systems and digital accessories. It also unites your Carrier HVAC equipment together on one, coherent CCN network. The PremierLink can be factory installed, or easily field installed. Not available with 2-speed Staged Air Volume (SAV) system.

RTU Open, Multi-Protocol Controller

Connect the rooftop to an existing BAS without needing complicated translators or adapter modules using the RTU Open controller. This new controller speaks the 4 most common building automation system languages (Bacnet, Modbus, N2, and Lonworks). Use this controller when you have an existing BAS.

Time Guard II Control Circuit

This accessory protects your compressor by preventing short-cycling in the event of some other failure, prevents the compressor from restarting for 30 seconds after stopping. Not required with PremierLink, RTU Open, or authorized commercial thermostats.

Motorized 2-Position Damper

The new Carrier 2-position, motorized outdoor air damper admits up to 100% outside air. Using reliable, gear-driven technology, the 2-position damper opens to allow ventilation air and closes when the rooftop stops, stopping unwanted infiltration. Not available with Staged Air Volume (SAV) models.

Manual OA Damper

Manual outdoor air dampers are an economical way to bring in ventilation air. The dampers are available in 25% and 50% versions. Not available with Staged Air Volume (SAV) models.

Optional Humidi-MiZer Adaptive Dehumidification System

Carrier’s Humidi-MiZer Adaptive Dehumidification System is an all-inclusive factory installed option that can be ordered with any WeatherMaker 48TC**04-16 rooftop unit.

Opt. Humidi-MiZer Adap. Dehum. Sys. (cont.)

This system expands the envelope of operation of Carrier's WeatherMaker rooftop products to provide unprecedented flexibility to meet year round comfort conditions.

The Humidi-MiZer adaptive dehumidification system has the industry's only dual dehumidification mode setting. The Humidi-MiZer system includes two new modes of operation.

The WeatherMaker 48TC**04-16 rooftop coupled with the Humidi-MiZer system is capable of operating in normal design cooling mode, subcooling mode, and hot gas reheat mode. Normal design cooling mode is when the unit will operate under its normal sequence of operation by cycling compressors to maintain comfort conditions.

Subcooling mode will operate to satisfy part load type conditions when the space requires combined sensible and a higher proportion of latent load control. Hot Gas Reheat mode will operate when outdoor temperatures diminish and the need for latent capacity is required for sole humidity control. Hot Gas Reheat mode will provide neutral air for maximum dehumidification operation.

Staged Air Volume (SAV) Indoor Fan Speed System

Carrier's Staged Air Volume (SAV) system saves energy and installation time by utilizing a Variable Frequency Drive (VFD) to automatically adjust the indoor fan motor speed in sequence with the units cooling operation. Per ASHRAE 90.1 standard section 6.4.3.10.b, during the first stage of cooling operation the VFD will adjust the fan motor to provide 2/3rd of the total cfm established for the unit. When a call for the second stage of cooling is required, the VFD will allow the total cfm for the unit established (100%). During the heating mode the VFD will allow total design cfm (100%) operation and during the ventilation mode the VFD will allow operation to 2/3rd of total cfm.

Compared to single speed indoor fan motor systems, Carrier's SAV system can save substantial energy, 25%+*, versus single speed indoor fan motor systems.

The VFD used in Carrier's SAV system has soft start capabilities to slowly ramp up the speeds, thus eliminating any high inrush air volume during initial start-up. It also has internal over-current protection for the fan motor and a field installed display kit that allows adjustment and in depth diagnostics of the VFD.

This SAV system is available on models with 2-stage cooling operation with electromechanical or RTU Open, Multi Protocol controls. Both space sensor and conventional thermostats/controls can be used to provide accurate control in any application.

The SAV system is very flexible for initial fan performance set up and adjustment. The standard factory shipped VFD is pre-programmed to automatically stage the fan speed between the first and second stage of cooling. The unit fan performance static pressure and cfm can be easily adjusted using the traditional means of pulley adjustments. The other means to adjust the unit static and cfm performance is to utilize the field installed Display Kit and adjust the frequency and voltage in the VFD to performance requirements. In either case, once set up, the VFD will automatically adjust the speed between the cooling stage operations.

*Data based on .10 ($/kWh) in an office application utilizing Carrier's HAP 4.6 simulation software program

Motormaster Head Pressure Controller

The Motormaster motor controller is a low ambient, head pressure controller kit that is designed to maintain the unit's condenser head pressure during periods of low ambient cooling operation. This device should be used as an alternative to economizer free cooling when economizer usage is either not appropriate or desired. The Motormaster will either cycle the outdoor fan motors or operate them at reduced speed to maintain the unit operation, depending on the model.

Winter Start Kit

The winter start kit by Carrier extends the low ambient limit of your rooftop to 25°F (-4°C). The kit bypasses the low pressure switch, preventing nuisance tripping of the low pressure switch. Other low ambient precautions may still be prudent.

Propane Heating

Convert your gas heat rooftop from standard natural gas operation to propane using this field installed kit.

High Altitude Heating

High altitudes have less oxygen, which means heat exchangers need less fuel. The new gas orifices in this field installed kit make the necessary adjustment for high altitude applications. They restore the optimal fuel to air mixture and maintain healthy combustion at altitudes above 2000 ft (610m). Kits may not be required in all areas.

Hinged Access Panels

Allows access to unit's major components with specifically designed hinged access panels. Panels are: filter, control box, fan motor, and compressor.

FACTORY OPTIONS AND/OR ACCESSORIES (cont.)

Flue Discharge Deflector

The flue discharge deflector is a useful accessory when flue gas recirculation is a concern. By venting the flue discharge upwards, the deflector minimizes the chance for a neighboring unit to intake the flue exhaust (04-14 sizes only).

Optional Stainless Steel Heat Exchanger

The stainless steel heat exchanger option provides the tubular heat exchanger be made out of a minimum 20 gauge type 409 stainless steel for applications where the mixed air to the heat exchanger is expected to drop below 45°F (7°C). Stainless steel may be specified on applications where the presence of airborne contaminants require its use (applications such as paper mills) or in areas with very high outdoor humidity that may result in severe condensation in the heat exchanger during cooling operation.

Flue Discharge Heat Shield

The flue discharge heat shield keeps people from touching the rooftop unit's potentially hot flue discharge. This is especially useful for ground level applications, where more, untrained people could have access to the unit's exterior (04-14 sizes only).

Alternate Motors and Drives

Some applications need larger horsepower motors, some need more airflow, and some need both. Regardless of the case, your Carrier expert has a factory installed combination to meet your application. A wide selection of motors and pulleys (drives) are available, factory installed, to handle nearly any application.

Thru-the-Base Connections

Thru-the-base connections, available as either an accessory or as a factory option, are necessary to ensure proper connection and seal when routing wire and piping through the rooftop's basepan and curb. These couplings eliminate roof penetration and should be considered for gas lines, main power lines, as well as control power.

Supply Duct Cover

This supply duct cover is required when field converting the factory standard vertical duct supply to horizontal duct supply configuration. One required per unit (16 size only).

California OSHPD Seismic Certification Label

Units meet the seismic requirements of the International Code Council Evaluation Service (ICC-ES) document AC156 (Acceptance Criteria for Seismic Qualification by Shake-Table Testing of Nonstructural Components and Systems) and per International Building Code (IBC 2009) at an SDS (g) value of 2.00 z/h=1.0, Ip=1.5 and certified by independent structural engineers. A certification label is applied to the unit that meets the CA OSHPD Special Seismic Certification pre-approval labeling requirements on the external chassis of the unit.

Table 2 – AHRI COOLING RATING TABLE

UNIT	COOLING STAGES	NOM. CAPACITY (TONS)	NET COOLING CAPACITY (MBH)	TOTAL POWER (KW)	SEER	EER	IEER WITH SINGLE SPEED INDOOR MOTOR	IEER WITH 2–SPEED INDOOR MOTOR
A04	1	3	34.6	3.1	13.0	11.00	N/A	N/A
A05	1	4	45.0	4.0	13.0	11.00	N/A	N/A
A06	1	5	59.0	5.5	13.0	10.75	N/A	N/A
A07	1	6	70.0	6.4	N/A	11.00	11.2	N/A
A08	1	7.5	88.0	8.0	N/A	11.00	11.2	N/A
D08	2	7.5	83.0	7.5	N/A	11.00	11.7	12.8
A09	1	8.5	97.0	8.8	N/A	11.00	11.2	N/A
D09	2	8.5	99.0	9.0	N/A	11.00	11.7	12.8
A12	1	10	117.0	10.6	N/A	11.00	11.2	N/A
D12	2	10	114.0	10.3	N/A	11.10	11.8	12.8
D14	2	12.5	140.0	12.9	N/A	10.80	11.0	11.8
D16	2	15	174.0	16.1	N/A	10.80	11.7	12.4

LEGEND

AHRI – Air Conditioning, Heating and Refrigeration Institute Test Standard
ASHRAE – American Society of Heating, Refrigerating and Air Conditioning, Inc.
EER – Energy Efficiency Ratio
IEER – Integrated Energy Efficiency Ratio
N/A – Not Applicable
SEER – Seasonal Energy Efficiency Ratio

NOTES:

1. Rated in accordance with AHRI Standard 210/240 or 340/360, as appropriate.
2. Ratings are based on:
   Cooling Standard: 80°F (27°C) db, 67°F (19°C) wb indoor air temp and 95°F (35°C) db outdoor air temp.
   IEER Standard: A measure that expresses cooling part–load EER efficiency for commercial unitary air conditioning and heat pump equipment on the basis of weighted operation at various load capacities.
3. All 48TC units comply with ASHRAE 90.1 Energy Standard for minimum SEER and EER requirements.
4. 48TC units comply with US Energy Policy Act (2005). To evaluate code compliance requirements, refer to state and local codes.

Use of the AHRI Certified TM Mark indicates a manufacturer's participation in the program For verification of certification for individual products, go to www.ahridirectory.org.

Table 3 – HEATING RATING TABLE - NATURAL GAS & PROPANE

UNITS		GAS HEAT	AL/SS HEAT EXCHANGER		TEMP RISE (DEG F)	THERMAL EFFICIENCY (%)	AFUE (%)
			INPUT / OUTPUT STAGE 1 (MBH)	INPUT / OUTPUT STAGE 2 (MBH)			
Single Phase	04	LOW	–	72 / 56	25 – 55	82%	79.1%
		MED	–	115 / 89	55 – 85	80%	78.5%
		HIGH	–	–	–	–	–
	05	LOW	–	72 / 56	25 – 55	82%	79.1%
		MED	–	115 / 90	35 – 65	81%	79%
		HIGH	–	150 / 117	50 – 80	80%	78.8%
	06	LOW	–	72 / 56	20 – 55	82%	79.1%
		MED	–	115 / 90	30 – 65	81%	79%
		HIGH	–	150 / 117	40 – 80	80%	78.8%
Three Phase	04	LOW	–	72 / 56	25 – 55	82%	N/A
		MED	82 / 66	115 / 89	55 – 85	80%	N/A
		HIGH	–	–	–	–	–
	05	LOW	–	72 / 56	25 – 55	82%	N/A
		MED	–	115 / 90	35 – 65	81%	N/A
		HIGH	120 / 96	150 / 117	50 – 80	80%	N/A
	06	LOW	–	72 / 56	20 – 55	82%	N/A
		MED	–	115 / 90	30 – 65	81%	N/A
		HIGH	120 / 96	150 / 117	40 – 80	80%	N/A
	07	LOW	–	72 / 59	15 – 55	82%	N/A
		MED	–	115 / 93	25 – 65	81%	N/A
		HIGH	120 / 96	150 / 120	35 – 80	80%	N/A
	08	LOW	–	125 / 103	20 – 50	82%	N/A
		MED	120 / 98	180 / 148	35 – 65	82%	N/A
		HIGH	180 / 147	224 / 184	45 – 75	82%	N/A
	09	LOW	–	125 / 103	20 – 50	82%	N/A
		MED	120 / 98	180 / 148	30 – 65	82%	N/A
		HIGH	180 / 147	224 / 184	40 – 75	82%	N/A
	12	LOW	120 / 98	180 / 148	25 – 65	82%	N/A
		MED	180 / 147	224 / 184	30 – 65	82%	N/A
		HIGH	200 / 160	250 / 205	35 – 70	80%	N/A
	14	LOW	120 / 98	180 / 148	20 – 65	82%	N/A
		MED	180 / 147	224 / 184	25 – 65	82%	N/A
		HIGH	200 / 160	250 / 205	25 – 70	80%	N/A
	16	LOW	144 / 118	180 / 146	15 – 55	81%	N/A
		MED	192 / 156	240 / 195	20 – 60	81%	N/A
		HIGH	280 / 224	350 / 280	35 – 65	80%	N/A

NOTES:

Heat ratings are for natural gas heat exchangers operated at or below 2000 ft (610 m). For information on propane or altitudes above 2000 ft (610 m), see the Application Data section of this book. Accessory Propane/High Altitude kits are also available.

In the USA the input rating for altitudes above 2000 ft (610m) must be derated by 4% for each 1000 ft (305 m) above sea level. In Canada, the input rating must be derated by 10% for altitudes of 2000 ft (610 m) to 4500 ft (1372 m) above sea level.

Table 4 – HEATING RATING TABLE - LOW NO_X[1]

UNIT		GAS HEAT	LOW NOx HEAT EXCHANGER		TEMP RISE (DEG F)	THERMAL EFFICIENCY (%)	AFUE (%)
			INPUT / OUTPUT STAGE 1 (MBH)	INPUT / OUTPUT STAGE 2 (MBH)			
Single Phase	04	LOW	–	60 / 47	20 – 50	81%	80.6%
		MED	–	90 / 72	30 – 60	81%	80.6%
		HIGH	–	–	–	–	–
	05	LOW	–	60 / 47	20 – 50	81%	80.6%
		MED	–	90 / 72	30 – 60	81%	80.6%
		HIGH	–	120 / 97	40 – 70	81%	81.5%
	06	LOW	–	60 / 47	15 – 50	81%	80.6%
		MED	–	90 / 72	25 – 60	80%	80.6%
		HIGH	–	120 / 97	35 – 70	80%	81.5%
Three Phase	04	LOW	–	60 / 47	20 – 50	81%	N/A
		MED	–	90 / 72	30 – 60	81%	N/A
		HIGH	–	–	–	–	–
	05	LOW	–	60 / 47	20 – 50	81%	N/A
		MED	–	90 / 72	30 – 60	81%	N/A
		HIGH	–	120 / 97	40 – 70	81%	N/A
	06	LOW	–	60 / 47	15 – 50	81%	N/A
		MED	–	90 / 72	25 – 60	80%	N/A
		HIGH	–	120 / 97	35 – 70	80%	N/A

NOTE:
1. Units meet California's South Coast Air Quality Management District (SCAQMD) Low–NO_x emissions requirement of 40 nanograms per joule or less.

– Not Applicable

Table 5 – SOUND PERFORMANCE TABLE

UNIT	COOLING STAGES	OUTDOOR SOUND (DB) @60HZ								
		A–WEIGHTED	63	125	250	500	1000	2000	4000	8000
A04	1	80	90.6	80.9	80.2	76	74.6	71.3	68.5	63.9
A05	1	81	90.9	84.6	79.5	77.9	76.5	71.1	66.9	62.5
A06	1	78	84.0	82.2	76.3	74.8	72.5	68.8	65.6	61.8
A07	1	78	88.8	81.8	76.9	74.4	73.3	69.8	66.3	62.7
A08	1	82	90.1	82.6	81.0	79.4	77.0	73.0	70.4	66.7
D08	2	82	85.8	84.3	80.5	78.7	76.4	72.7	68.3	65.1
A09	1	83	91.2	86.4	81.9	81.0	78.3	73.9	71.4	67.3
D09	2	82	88.6	85.0	81.6	79.5	77.4	74.1	71.0	66.3
A12	1	82	88.6	85.0	81.6	79.5	77.4	74.1	71.0	66.3
D12	2	82	89.0	83.1	80.5	78.5	75.5	71.6	69.6	69.3
D14	2	87	87.0	85.2	84.6	84.9	82.2	78.4	75.3	72.9
D16	2	87	87.0	85.2	84.6	84.9	82.2	78.4	75.3	72.9

LEGEND
dB – Decibel

NOTES:
1. Outdoor sound data is measure in accordance with AHRI standard 270–2008.
2. Measurements are expressed in terms of sound power. Do not compare these values to sound pressure values because sound pressure depends on specific environmental factors which normally do not match individual applications. Sound power values are independent of the environment and therefore more accurate.
3. A–weighted sound ratings filter out very high and very low frequencies, to better approximate the response of "average" human ear. A–weighted measurements for Carrier units are taken in accordance with AHRI standard 270–2008.

Table 6 – MINIMUM - MAXIMUM AIRFLOW RATINGS - NATURAL GAS & PROPANE

UNIT	HEAT LEVEL	COOLING		AL HX HEATING		SS HX HEATING	
		MINIMUM	MAXIMUM	MINIMUM	MAXIMUM	MINIMUM	MAXIMUM
48TC**04	LOW	900	1500	990	2190	990	2190
	MED			1000	1550	1000	1550
	HIGH						
48TC**05	LOW	1200	2000	990	2190	990	2190
	MED			1330	2460	1330	2460
	HIGH			1390	2220	1390	2220
48TC**06	LOW	1500	2500	990	2730	990	2730
	MED			1330	2880	1330	2880
	HIGH			1390	2780	1390	2780
48TC**07	LOW	1800	3000	990	3640	990	3640
	MED			1330	3450	1330	3450
	HIGH			1390	3170	1390	3170
48TC**08	LOW	2250	3750	1900	4750	1900	4750
	MED			2100	3900	2100	3900
	HIGH			2270	3780	2270	3780
48TC**09	LOW	2550	4250	1900	4750	1900	4750
	MED			2100	4560	2100	4560
	HIGH			2270	4250	2270	4250
48TC**12	LOW	3000	5000	2100	5470	2100	5470
	MED			2620	5670	2620	5670
	HIGH			2650	5290	2650	5290
48TC**14	LOW	3600	6000	2100	6830	2100	6830
	MED			2620	6800	2620	6800
	HIGH			2650	7410	2650	7410
48TC**16	LOW	4500	7500	2450	7500	2450	9000
	MED			3000	6750	3000	9000
	HIGH			3990	7200	3990	7410

Table 7 – PHYSICAL DATA (COOLING) 3 - 6 TONS

	48TC*A04	48TC*A05	48TC*A06	48TC*A07
Refrigeration System				
# Circuits / # Comp. / Type	1 / 1 / Scroll	1 / 1 / Scroll	1 / 1 / Scroll	1 / 1 / Scroll
Puron® refrig. (R–410A) (lbs–oz)	5–10	8–8	10–11	14–2
Humidi–MiZer Puron® refrig. charge A/B (lbs – oz)	8–11	14–13	16–0	22–5
Metering Device	Acutrol	Acutrol	Acutrol	Acutrol
High–press. Trip / Reset (psig)	630 / 505	630 / 505	630 / 505	630 / 505
Low–press. Trip / Reset (psig)	54 / 117	54 / 117	54 / 117	54 / 117
Compressor Capacity Staging (%)	100%	100%	100%	100%
Evap. Coil				
Material (Tube/Fin)	Cu / Al	Cu / Al	Cu / Al	Cu / Al
Coil type	3/8–in RTPF	3/8–in RTPF	3/8–in RTPF	3/8–in RTPF
Rows / FPI	2 / 15	2 / 15	4 / 15	4 / 15
Total Face Area (ft^2)	5.5	5.5	5.5	7.3
Condensate Drain Conn. Size	3/4–in	3/4–in	3/4–in	3/4–in
Evap. Fan and Motor				
Standard Static 1 phase				
Motor Qty / Drive Type	1 / Belt	1 / Belt	1 / Belt	–
Max BHP	1.2	1.2	1.2	–
RPM Range	560–854	560–854	770–1175	–
Motor Frame Size	48	48	48	–
Fan Qty / Type	1 / Centrifugal	1 / Centrifugal	1 / Centrifugal	–
Fan Diameter (in)	10 x 10	10 x 10	10 x 10	–
Medium Static 1 phase				
Motor Qty / Drive Type	1 / Belt	1 / Belt	1 / Belt	–
Max BHP	1.2	1.2	1.5	–
RPM Range	770–1175	770–1175	1035–1466	–
Motor Frame Size	48	48	56	–
Fan Qty / Type	1 / Centrifugal	1 / Centrifugal	1 / Centrifugal	–
Fan Diameter (in)	10 x 10	10 x 10	10 x 10	–
Standard Static 3 phase				
Motor Qty / Drive Type	1 / Belt	1 / Belt	1 / Belt	1 / Belt
Max BHP	1.7	1.7	1.7	2.4
RPM Range	560–854	560–854	770–1175	1073–1457
Motor Frame Size	48	48	48	56
Fan Qty / Type	1 / Centrifugal	1 / Centrifugal	1 / Centrifugal	1 / Centrifugal
Fan Diameter (in)	10 x 10	10 x 10	10 x 10	10 x 10
Medium Static 3 phase				
Motor Qty / Drive Type	1 / Belt	1 / Belt	1 / Belt	1 / Belt
Max BHP	1.7	1.7	2.4	2.9*
RPM Range	770–1175	770–1175	1035–1466	1173–1518
Motor Frame Size	48	48	56	56
Fan Qty / Type	1 / Centrifugal	1 / Centrifugal	1 / Centrifugal	1 / Centrifugal
Fan Diameter (in)	10 x 10	10 x 10	10 x 10	10 x 10
High Static 3 phase				
Motor Qty / Drive Type	1 / Belt	1 / Belt	1 / Belt	1 / Belt
Max BHP	2.4	2.4	2.9	3.7
RPM Range	1035–1466	1035–1466	1303–1687	1474–1788
Motor Frame Size	56	56	56	56
Fan Qty / Type	1 / Centrifugal	1 / Centrifugal	1 / Centrifugal	1 / Centrifugal
Fan Diameter (in)	10 x 10	10 x 10	10 x 10	10 x 10
Cond. Coil				
Material (Tube/Fin)	Cu / Al	Cu / Al	Cu / Al	Cu / Al
Coil type	3/8–in RTPF	3/8–in RTPF	3/8–in RTPF	3/8–in RTPF
Rows / FPI	1 / 17	2 / 17	2 / 17	2 / 17
Total Face Area (ft^2)	14.6	16.5	16.5	21.3
Humidi–MiZer Coil				
Material (Tube/Fin)	Cu / Al	Cu / Al	Cu / Al	Cu / Al
Rows..Fins/in.	1 / 17	2 / 17	2 / 17	2 / 17
Total Face Area (ft^2)	3.9	3.9	3.9	5.2
Cond. fan / motor				
Qty / Motor Drive Type	1/ Direct	1/ Direct	1/ Direct	1/ Direct
Motor HP / RPM	1/4 / 1100	1/4 / 1100	1/4 / 1100	1/4 / 1100
Fan diameter (in)	22	22	22	22
Filters				
RA Filter # / Size (in)	2 / 16 x 25 x 2	2 / 16 x 25 x 2	2 / 16 x 25 x 2	4 / 16 x 16 x 2
OA inlet screen # / Size (in)	1 / 20 x 24 x 1	1 / 20 x 24 x 1	1 / 20 x 24 x 1	1 / 20 x 24 x 1

NOTE: Humidi–MiZer is not available with Novation condenser coil models, only Round Tube / Plate Fin (RTPF).

* 575V motor utilizes 3.7 BHP.

– Not applicable

Table 8 – PHYSICAL DATA (HEATING) 3 - 6 TONS

	48TC**04	48TC**05	48TC**06	48TC**07
Gas Connection				
# of Gas Valves	1	1	1	1
Nat. gas supply line press (in. w.g.)/ (PSIG)	4 –13 / 0.18 – 0.47	4 –13 / 0.18 – 0.47	4 –13 / 0.18 – 0.47	4 –13 / 0.18 – 0.47
LP supply line press (in. w.g.) / (PSIG)	11 –13 / 0.40 – 0.47	11 –13 / 0.40 – 0.47	11 –13 / 0.40 – 0.47	11 –13 / 0.40 – 0.47
Heat Anticipator setting (Amps)				
1st stage	0.14	0.14	0.14	0.14
2nd stage	0.14	0.14	0.14	0.14
Natural Gas Heat				
LOW: # of stages / # of burners (total)	1 / 2	1 / 2	1 / 2	1 / 2
LOW: Connection Size	1/2–in NPT	1/2–in NPT	1/2–in NPT	1/2–in NPT
LOW: Rollout switch opens / closes	195 / 115	195 / 115	195 / 115	195 / 115
LOW: Temperature Rise	25 – 55	25 – 55	20 – 55	15 – 55
MED: # of stages / # of burners (total)	1 or 2 / 3	1 / 3	1 / 3	1 / 3
MED: Connection Size	1/2–in NPT	1/2–in NPT	1/2–in NPT	1/2–in NPT
MED: Rollout switch opens / closes	195 / 115	195 / 115	195 / 115	195 / 115
MED: Temperature Rise	55 – 85	35 – 65	30 – 65	25 – 65
HIGH: # of stages / # of burners (total)	–	1 or 2 / 3	1 or 2 / 3	2 / 3
HIGH: Connection Size	–	1/2–in NPT	1/2–in NPT	1/2–in NPT
HIGH: Rollout switch opens / closes	–	195 / 115	195 / 115	195 / 115
HIGH: Temperature Rise	–	50 – 80	40 – 80	35 – 80
Liquid Propane Heat				
LOW: # of stages / # of burners (total)	1 / 2	1 / 2	1 / 2	1 / 2
LOW: Connection Size	1/2–in NPT	1/2–in NPT	1/2–in NPT	1/2–in NPT
LOW: Rollout switch opens / closes	195 / 115	195 / 115	195 / 115	195 / 115
LOW: Temperature Rise	25 – 55	25 – 55	20 – 55	15 – 55
MED: # of stages / # of burners (total)	1 or 2 / 3	1 / 3	1 / 3	1 / 3
MED: Connection Size	1/2–in NPT	1/2–in NPT	1/2–in NPT	1/2–in NPT
MED: Rollout switch opens / closes	195 / 115	195 / 115	195 / 115	195 / 115
MED: Temperature Rise	55 – 85	35 – 65	30 – 65	25 – 65
HIGH: # of stages / # of burners (total)	–	1 or 2 / 3	1 or 2 / 3	2 / 3
HIGH: Connection Size	–	1/2–in NPT	1/2–in NPT	1/2–in NPT
HIGH: Rollout switch opens / closes	–	195 / 115	195 / 115	195 / 115
HIGH: Temperature Rise	–	50 – 80	40 – 80	35 – 80
Low NOx Gas Heat				
LOW: # of stages / # of burners (total)	1 / 2	1 / 2	1 / 2	–
LOW: Connection Size	1/2–in NPT	1/2–in NPT	1/2–in NPT	–
LOW: Rollout switch opens / closes	195 / 115	195 / 115	195 / 115	–
LOW: Temperature Rise	20 – 50	20 – 50	15 – 50	–
MED: # of stages / # of burners (total)	1 / 3	1 / 3	1 / 3	–
MED: Connection Size	1/2–in NPT	1/2–in NPT	1/2–in NPT	–
MED: Rollout switch opens / closes	195 / 115	195 / 115	195 / 115	–
MED: Temperature Rise	30 – 60	30 – 60	25 – 60	–
HIGH: # of stages / # of burners (total)	–	1 / 3	1 / 3	–
HIGH: Connection Size	–	1/2–in NPT	1/2–in NPT	–
HIGH: Rollout switch opens / closes	–	195 / 115	195 / 115	–
HIGH: Temperature Rise	–	40 – 70	35 – 70	–

– Not applicable

Table 9 – PHYSICAL DATA (COOLING) 7.5 - 8.5 TONS

	48TC*A08	48TC*D08	48TC*A09	48TC*D09
Refrigeration System				
# Circuits / # Comp. / Type	1 / 1 / Scroll	2 / 2 / Scroll	1 / 1 / Scroll	2 / 2 / Scroll
RTPF models R–410a charge A/B (lbs – oz)	13 – 12	8 – 5 / 8 – 2	15 – 4	10 – 5 / 10 – 12
Alternate (MCHX) R–410a charge A/B (lbs – oz)		4 – 6 / 4 – 6		
Alternate (Humidi–MiZer) R–410a charge A/B (lbs – oz)		13 – 3 / 13 – 3		16 – 13 / 16 – 13
Metering device	Acutrol	Acutrol	Acutrol	Acutrol
High–press. Trip / Reset (psig)	630 / 505	630 / 505	630 / 505	630 / 505
Low–press. Trip / Reset (psig)	54 / 117	54 / 117	54 / 117	54 / 117
Compressor Capacity Staging (%)	100%	50% / 100%	100%	50% / 100%
Evap. Coil				
Material	Cu / Al	Cu / Al	Cu / Al	Cu / Al
Coil type	3/8–in RTPF	3/8–in RTPF	3/8–in RTPF	3/8–in RTPF
Rows / FPI	3 / 15	3 / 15	3 / 15	3 / 15
Total face area (ft^2)	8.9	8.9	11.1	11.1
Condensate drain conn. size	3/4–in	3/4–in	3/4–in	3/4–in
Humidi–MiZer Coil				
Material	–	Cu / Al	–	Cu / Al
Coil type	–	3/8–in RTPF	–	3/8–in RTPF
Rows / FPI	–	2 / 17	–	2 / 17
Total face area (ft^2)	–	6.3	–	8.4
Evap. fan and motor				
Standard Static 3 phase				
Motor Qty / Drive Type	1 / Belt	1 / Belt	1 / Belt	1 / Belt
Max BHP	1.7	1.7	1.7	1.7
RPM range	489–747	489–747	518–733	518–733
Motor frame size	56	56	56	56
Fan Qty / Type	1 / Centrifugal	1 / Centrifugal	1 / Centrifugal	1 / Centrifugal
Fan Diameter (in)	15 x 15	15 x 15	15 x 15	15 x 15
Medium Static 3 phase				
Motor Qty / Drive type	1 / Belt	1 / Belt	1 / Belt	1 / Belt
Max BHP	2.9*	2.9*	2.4	2.4
RPM range	733–949	733–949	690–936	690–936
Motor frame size	56	56	56	56
Fan Qty / Type	1 / Centrifugal	1 / Centrifugal	1 / Centrifugal	1 / Centrifugal
Fan Diameter (in)	15 x 15	15 x 15	15 x 15	15 x 15
High Static 3 phase				
Motor Qty / Drive type	1 / Belt	1 / Belt	1 / Belt	1 / Belt
Max BHP	4.7	4.7	3.7	3.7
RPM range	909–1102	909–1102	838–1084	838–1084
Motor frame size	14	14	56	56
Fan Qty / Type	1 / Centrifugal	1 / Centrifugal	1 / Centrifugal	1 / Centrifugal
Fan Diameter (in)	15 x 15	15 x 15	15 x 15	15 x 15
Cond. Coil				
Material	Cu / Al	Cu / Al	Cu / Al	Cu / Al
Coil type	3/8–in RTPF	3/8–in RTPF	3/8–in RTPF	3/8–in RTPF
Rows / FPI	2 / 17	2 / 17	2 / 17	2 / 17
Total face area (ft2)	20.5	20.5	21.4	25.1
Alternate (MCHX) Cond. Coil				
Material	–	Al / Al	–	–
Coil type	–	Novation™	–	–
Rows / FPI	–	1 / 20	–	–
Total face area (ft2)	–	20.5	–	–
Cond. fan / motor				
Qty / Motor drive type	2 / direct	2 / direct	2 / direct	2 / direct
Motor HP / RPM	1/4 / 1100	1/4 / 1100	1/4 / 1100	1/4 / 1100
Fan diameter (in)	22	22	22	22
Filters				
RA Filter # / Size (in)	4 / 16 x 20 x 2	4 / 16 x 20 x 2	4 / 20 x 20 x 2	4 / 20 x 20 x 2
OA inlet screen # / Size (in)	1 / 20 x 24 x 1	1 / 20 x 24 x 1	1 / 20 x 24 x 1	1 / 20 x 24 x 1

NOTE: Humidi–MiZer is not available with Novation condenser coil models, only Round Tube/Plate Fin (RTPF).

* 575V motor utilizes 3.7 BHP

– Not applicable

Table 10 – PHYSICAL DATA (COOLING) 10 - 15 TONS

	48TC*A12	48TC*D12	48TC*D14	48TC*D16
Refrigeration System				
# Circuits / # Comp. / Type	1 / 1 / Scroll	2 / 2 / Scroll	2 / 2 / Scroll	2 / 2 / Scroll
RTPF models R–410a charge A/B (lbs – oz)	20 – 0	10 – 5 / 10 – 3	11 – 0 / 11 – 6	15–14/16–12
Alternate (MCHX) R–410a charge A/B (lbs – oz)	–	6 – 0 / 6 – 0	7 – 6 / 8 – 0	–
Alternate (Humidi–MiZer) R–410a charge A/B (lbs – oz)	–	16 – 10 / 16 – 0	17 – 10 / 18 – 3	–
Metering device	Acutrol	Acutrol	Acutrol	Acutrol
High–press. Trip / Reset (psig)	630 / 505	630 / 505	630 / 505	630 / 505
Low–press. Trip / Reset (psig)	54 / 117	54 / 117	54 / 117	54 / 117
Compressor Capacity Staging (%)	100%	50% / 100%	50% / 100%	50% / 100%
Evap. Coil				
Material	Cu / Al	Cu / Al	Cu / Al	Cu / Al
Coil type	3/8–in RTPF	3/8–in RTPF	3/8–in RTPF	3/8–in RTPF
Rows / FPI	4 / 15	4 / 15	4 / 15	1 / 17
Total face area (ft^2)	11.1	11.1	11.1	13.8
Condensate drain conn. size	3/4–in	3/4–in	3/4–in	3/4–in
Humidi–MiZer Coil				
Material	–	Cu / Al	Cu / Al	Cu / Al
Coil type	–	3/8–in RTPF	3/8–in RTPF	3/8–in RTPF
Rows / FPI	–	2 / 17	2 / 17	1 / 17
Total face area (ft^2)	–	8.4	8.4	13.8
Evap. fan and motor				
Standard Static 3 phase				
Motor Qty / Drive type	1 / Belt	1 / Belt	1 / Belt	1 / Belt
Max BHP	2.4	2.4	2.9*	2.9*
RPM range	591–838	591–838	652–843	507–676
Motor frame size	56	56	56	56
Fan Qty / Type	1 / Centrifugal	1 / Centrifugal	1 / Centrifugal	1 / Centrifugal
Fan Diameter (in)	15 x 15	15 x 15	15 x 15	18 x 18
Medium Static 3 phase				
Motor Qty / Drive type	1 / Belt	1 / Belt	1 / Belt	1 / Belt
Max BHP	3.7	3.7	3.7	3.7
RPM range	838–1084	838–1084	838–1084	627–851
Motor frame size	56	56	56	56
Fan Qty / Type	1 / Centrifugal	1 / Centrifugal	1 / Centrifugal	1 / Centrifugal
Fan Diameter (in)	15 x 15	15 x 15	15 x 15	18 x 18
High Static 3 phase				
Motor Qty / Drive type	1 / Belt	1 / Belt	1 / Belt	1 / Belt
Max BHP	4.7	4.7	4.7	6.1
RPM range	1022–1240	1022–1240	1022–1240	776–955
Motor frame size	14	14	14	S184T
Fan Qty / Type	1 / Centrifugal	1 / Centrifugal	1 / Centrifugal	1 / Centrifugal
Fan Diameter (in)	15 x 15	15 x 15	15 x 15	18 x 18
Cond. Coil				
Material	Cu / Al	Cu / Al	Cu / Al	Cu / Al
Coil type	3/8–in RTPF	3/8–in RTPF	3/8–in RTPF	3/8–in RTPF
Rows / FPI	2 / 17	2 / 17	3 / 17	2 / 17
Total face area (ft2)	25.1	25.1	25.1	2 @ 23.1
Alternate (MCHX) Cond. Coil				
Material	–	Al / Al	Al / Al	–
Coil type	–	Novation™	Novation™	–
Rows / FPI	–	1 / 20	2 / 20	–
Total face area (ft2)	–	25.1	25.1	–
Cond. fan / motor				
Qty / Motor drive type	2 / direct	2 / direct	1 / direct	3 / direct
Motor HP / RPM	1/4 / 1100	1/4 / 1100	1 / 1175	1/4 / 1100
Fan diameter (in)	22	22	30	22
Filters				
RA Filter # / Size (in)	4 / 20 x 20 x 2	4 / 20 x 20 x 2	4 / 20 x 20 x 2	6 / 18 x 24 x 2 2 / 24 x 27 x 1 (vert.)
OA inlet screen # / Size (in)	1 / 20 x 24 x 1	1 / 20 x 24 x 1	1 / 20 x 24 x 1	1 / 30 x 39 x 1 (horiz)

NOTE: Humidi–MiZer is not available with Novation condenser coil models, only Round Tube/Plate Fin (RTPF) up to 16 size.

* 575V motor utilizes 3.7 BHP

– Not applicable

Table 11 – PHYSICAL DATA (HEATING) 7.5 - 10 TONS

	48TC**08	48TC**09	48TC**12
Gas Connection			
# of Gas Valves	1	1	1
Nat. gas supply line press (in. w.g.)/ (PSIG)	4 –13 / 0.18 – 0.47	4 –13 / 0.18 – 0.47	4 –13 / 0.18 – 0.47
LP supply line press (in. w.g.) / (PSIG)	11 –13 / 0.40 – 0.47	11 –13 / 0.40 – 0.47	11 –13 / 0.40 – 0.47
Heat Anticipator setting (Amps)			
1st stage	0.14	0.14	0.14
2nd stage	0.14	0.14	0.14
Natural Gas Heat			
LOW			
# of stages / # of burners (total)	1 / 3	1 / 3	2 / 4
Connection Size	1/2–in NPT	1/2–in NPT	3/4–in NPT
Rollout switch opens / closes	195 / 115	195 / 115	195 / 115
Temperature Rise	20 – 50	20 – 50	25 – 65
MED			
# of stages / # of burners (total)	2 / 4	2 / 4	2 / 5
Connection Size	3/4–in NPT	3/4–in NPT	3/4–in NPT
Rollout switch opens / closes	195 / 115	195 / 115	195 / 115
Temperature Rise	35 – 65	30 – 65	30 – 65
HIGH			
# of stages / # of burners (total)	2 / 5	2 / 5	2 / 5
Connection Size	3/4–in NPT	3/4–in NPT	3/4–in NPT
Rollout switch opens / closes	195 / 115	195 / 115	195 / 115
Temperature Rise	45 – 75	40 – 75	35 – 70
Liquid Propane Heat			
LOW			
# of stages / # of burners (total)	1 / 3	1 / 3	2 / 4
Connection Size	1/2–in NPT	1/2–in NPT	3/4–in NPT
Rollout switch opens / closes	195 / 115	195 / 115	195 / 115
Temperature Rise	20 – 50	20 – 50	25 – 65
MED			
# of stages / # of burners (total)	2 / 4	2 / 4	2 / 5
Connection Size	3/4–in NPT	3/4–in NPT	3/4–in NPT
Rollout switch opens / closes	195 / 115	195 / 115	195 / 115
Temperature Rise	35 – 65	30 – 65	30 – 65
HIGH			
# of stages / # of burners (total)	2 / 5	2 / 5	2 / 5
Connection Size	3/4–in NPT	3/4–in NPT	3/4–in NPT
Rollout switch opens / closes	195 / 115	195 / 115	195 / 115
Temperature Rise	45 – 75	40 – 75	35 – 70
Low NOx Gas Heat			
LOW			
# of stages / # of burners (total)	–	–	–
Connection Size	–	–	–
Rollout switch opens / closes	–	–	–
Temperature Rise	–	–	–
MED			
# of stages / # of burners (total)	–	–	–
Connection Size	–	–	–
Rollout switch opens / closes	–	–	–
Temperature Rise	–	–	–
HIGH			
# of stages / # of burners (total)	–	–	–
Connection Size	–	–	–
Rollout switch opens / closes	–	–	–
Temperature Rise	–	–	–

– Not applicable

Table 12 – PHYSICAL DATA (HEATING) 12.5 - 15TONS

	48TC**14	48TC**16
Gas Connection		
# of Gas Valves	1	1
Nat. gas supply line press (in. w.g.)/ (PSIG)	4 – 13 / 0.18 – 0.47	5 – 13 / 0.18 – 0.47
LP supply line press (in. w.g.) / (PSIG)	11 – 13 / 0.40 – 0.47	11 – 13 / 0.40 – 0.47
Heat Anticipator setting (Amps)		
1st stage	0.14	0.14
2nd stage	0.14	0.14
Natural Gas Heat		
LOW		
# of stages / # of burners (total)	2 / 4	2 / 6
Connection Size	3/4 – in NPT	3/4 – in NPT
Rollout switch opens / closes	195 / 115	225 / 145
Temperature Rise	25 – 65	20 – 55
MED		
# of stages / # of burners (total)	2 / 5	2 / 8
Connection Size	3/4 – in NPT	3/4 – in NPT
Rollout switch opens / closes	195 / 115	225 / 145
Temperature Rise	30 – 65	25 – 60
HIGH		
# of stages / # of burners (total)	2 / 5	2 / 10
Connection Size	3/4 – in NPT	3/4 – in NPT
Rollout switch opens / closes	195 / 115	225 / 145
Temperature Rise	35 – 70	35 – 65
Liquid Propane Heat		
LOW		
# of stages / # of burners (total)	2 / 4	2 / 6
Connection Size	3/4 – in NPT	3/4 – in NPT
Rollout switch opens / closes	195 / 115	225 / 145
Temperature Rise	25 – 65	20 – 55
MED		
# of stages / # of burners (total)	2 / 5	2 / 8
Connection Size	3/4 – in NPT	3/4 – in NPT
Rollout switch opens / closes	195 / 115	225 / 145
Temperature Rise	30 – 65	25 – 60
HIGH		
# of stages / # of burners (total)	2 / 5	2 / 10
Connection Size	3/4 – in NPT	3/4 – in NPT
Rollout switch opens / closes	195 / 115	225 / 145
Temperature Rise	35 – 70	35 – 65
Low NOx Gas Heat		
LOW		
# of stages / # of burners (total)	–	–
Connection Size	–	–
Rollout switch opens / closes	–	–
Temperature Rise	–	–
MED		
# of stages / # of burners (total)	–	–
Connection Size	–	–
Rollout switch opens / closes	–	–
Temperature Rise	–	–
HIGH		
# of stages / # of burners (total)	–	–
Connection Size	–	–
Rollout switch opens / closes	–	–
Temperature Rise	–	–

– Not applicable

CURBS, WEIGHTS & DIMENSIONS

NOTES:

1. DIMENSIONS ARE IN INCHES, DIMENSIONS IN [ ] ARE IN MILLIMETERS.
2. CENTER OF GRAVITY
3. DIRECTION OF AIR FLOW

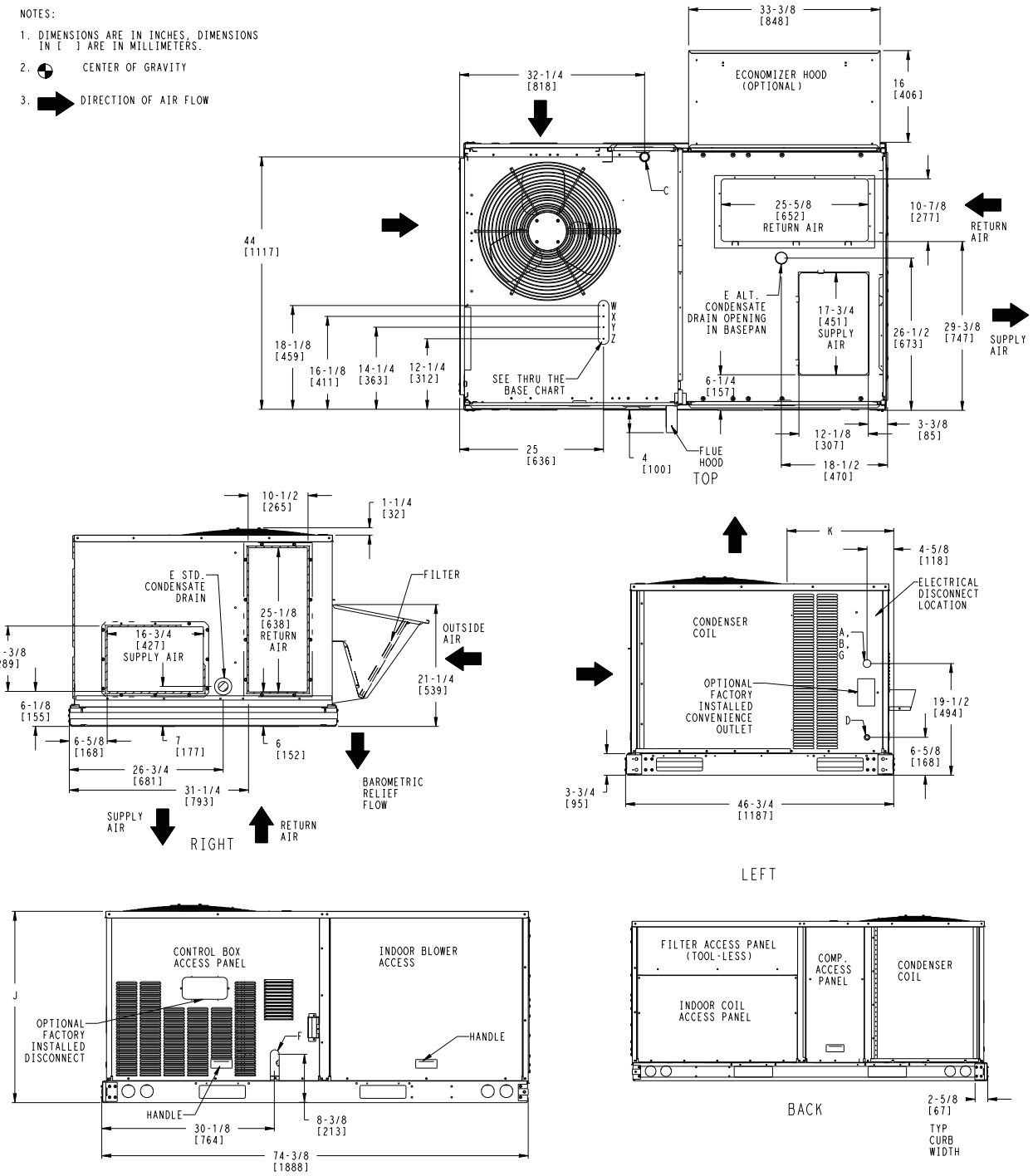

	CONNECTION SIZES
A	1 3/8" [35] DIA FIELD POWER SUPPLY HOLE
B	2" [50] DIA POWER SUPPLY KNOCKOUT
C	1 3/4" [51] DIA GAUGE ACCESS PLUG
D	7/8" [22] DIA FIELD CONTROL WIRING HOLE
E	3/4"-14 NPT CONDENSATE DRAIN
F	1/2"-14 NPT GAS CONNECTION
G	2 1/2 " [64] DIA POWER SUPPLY KNOCK-OUT

THRU-THE-BASE CHART THESE HOLES REQUIRED FOR USE CRBTMPWR001A01, 003A01			
	THREADED CONDUIT SIZE	WIRE USE	REQ'D HOLE SIZES (MAX.)
W	1/2"	ACC.	7/8" [22.2]
X	1/2"	24V	7/8" [22.2]
Y *	3/4" (001,003)	POWER	1 1/8" [28.4]
Z**	(003) 1/2" FPT	GAS	1 3/16" [30.0]
	FOR "THRU-THE-BASEPAN" FACTORY OPTION, FITTINGS FOR ONLY X,Y, & Z ARE PROVIDED		
*	SELECT EITHER 3/4" OR 1/2" FOR POWER, DEPENDING ON WIRE SIZE		
**	(001) PROVIDES 3/4" FPT THRU CURB FLANGE & FITTING.		

UNIT	J	K
48TC-A04	33 3/8 [847]	18 5/8 [472]
48TC-A05	33 3/8 [847]	14 7/8 [377]
48TC-A06	33 3/8 [847]	14 7/8 [377]
48TC-A07	41 3/8 [1051]	14 7/8 [377]

A10484

Fig. 1 - Dimensions 48TC 04-07

UNIT	STD. UNIT WEIGHT		CORNER WEIGHT (A)		CORNER WEIGHT (B)		CORNER WEIGHT (C)		CORNER WEIGHT (D)		C.G.		HEIGHT
	LBS.	KG.	LBS.	KG.	LBS.	KG.	LBS.	KG.	LBS.	KG.	X	Y	Z
48TC-A04	483	219	111	50	125	57	131	59	116	53	39 [991]	23 [584]	16 3/8 [416]
48TC-A05	537	244	124	56	139	63	145	66	129	59	39 [991]	23 [584]	17 [432]
48TC-A06	569	258	131	59	147	67	154	70	137	62	39 [991]	23 [584]	17 1/4 [438]
48TC-A07	652	296	150	68	169	76	176	80	157	71	39 [991]	23 [584]	20 1/8 [511]

*STANDARD UNIT WEIGHT IS WITH LOW HEAT & WITHOUT PACKAGING.
FOR OPTIONS & ACCESSORIES, REFER TO THE PRODUCT DATA CATALOG.

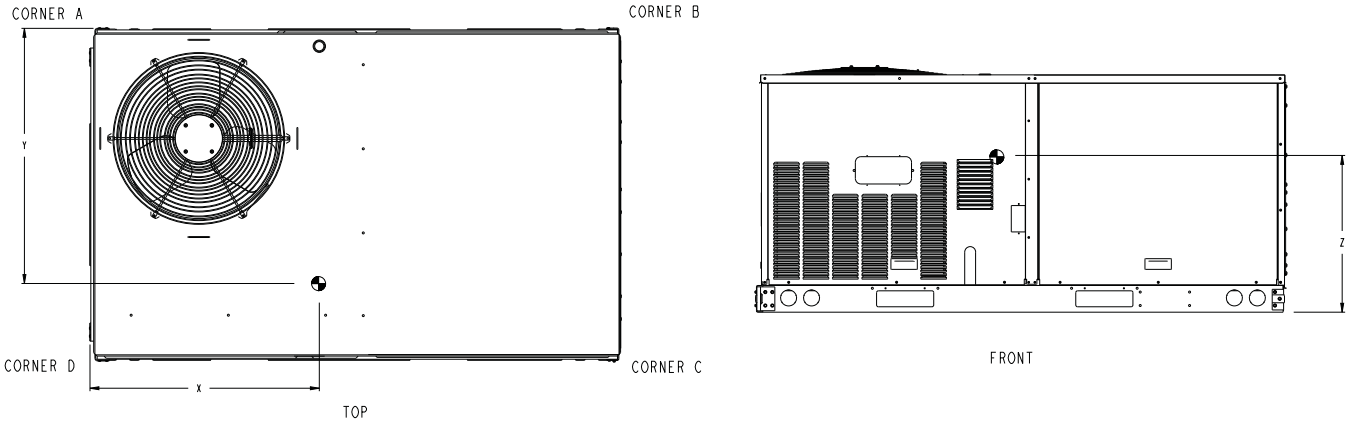

A10485A

Fig. 2 - Dimensions 48TC 04-07

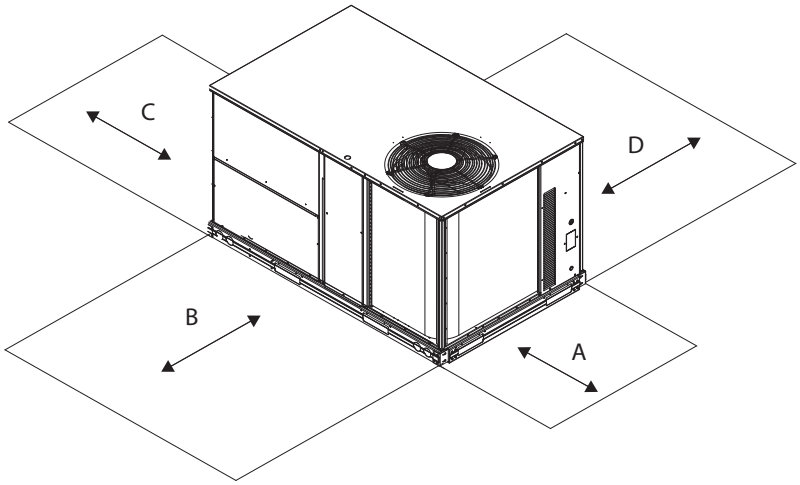

C08337

Fig. 3 - Service Clearance

LOC	DIMENSION	CONDITION
A	48–in (1219 mm)	Unit disconnect is mounted on panel
	18–in (457 mm)	No disconnect, convenience outlet option
	18–in (457 mm)	Recommended service clearance
	12–in (305 mm)	Minimum clearance
B	42–in (1067 mm)	Surface behind servicer is grounded (e.g., metal, masonry wall)
	36–in (914 mm)	Surface behind servicer is electrically non–conductive (e.g., wood, fiberglass)
	Special	Check for sources of flue products within 10–ft of unit fresh air intake hood
C	36–in (914 mm)	Side condensate drain is used
	18–in (457 mm)	Minimum clearance
D	48–in (1219 mm)	No flue discharge accessory installed, surface is combustible material
	42–in (1067 mm)	Surface behind servicer is grounded (e.g., metal, masonry wall, another unit)
	36–in (914 mm)	Surface behind servicer is electrically non–conductive (e.g., wood, fiberglass)
	Special	Check for adjacent units or building fresh air intakes within 10–ft of this unit's flue outlet

NOTE: Unit not designed to have overhead obstruction. Contact Application Engineering for guidance on any application planning overhead obstruction or vertical clearances.

CONNECTOR PKG. ACC.	GAS CONNECTION TYPE	GAS FITTING	POWER WIRING FITTING	CONTROL WIRING FITTING	ACCESSORY CONVENIENCE OUTLET WIRING CONNECTOR
CRBTMPWR001A01	THRU THE CURB	3/4" [19] NPT	3/4" [19] NPT	1/2" [12.7] NPT	1/2" [12.7] NPT
CRBTMPWR003A01	THRU THE BOTTOM	1/2" [12.7] NPT			

ROOF CURB ACCESSORY #	A
CRRFCURB001A01	14" [356]
CRRFCURB002A01	24" [610]

NOTES:
1. ROOFCURB ACCESSORY IS SHIPPED DISASSEMBLED.
2. INSULATED PANELS: 25.4 [1"] THK. POLYURETHANE FOAM, 44.5 [1-3/4] # DENSITY.
3. DIMENSIONS IN [ ] ARE IN MILLIMETERS.
4. ROOFCURB: 18 GAGE STEEL.
5. ATTACH DUCTWORK TO CURB. (FLANGES OF DUCT REST ON CURB).
6. SERVICE CLEARANCE 4 FEET ON EACH SIDE.
7. ▲ DIRECTION OF AIR FLOW.
8. CONNECTOR PACKAGE CRBTMPWR001A01 IS FOR THRU-THE-CURB GAS TYPE PACKAGE CRBTMPWR003A01 IS FOR THRU-THE-BOTTOM TYPE GAS CONNECTIONS.

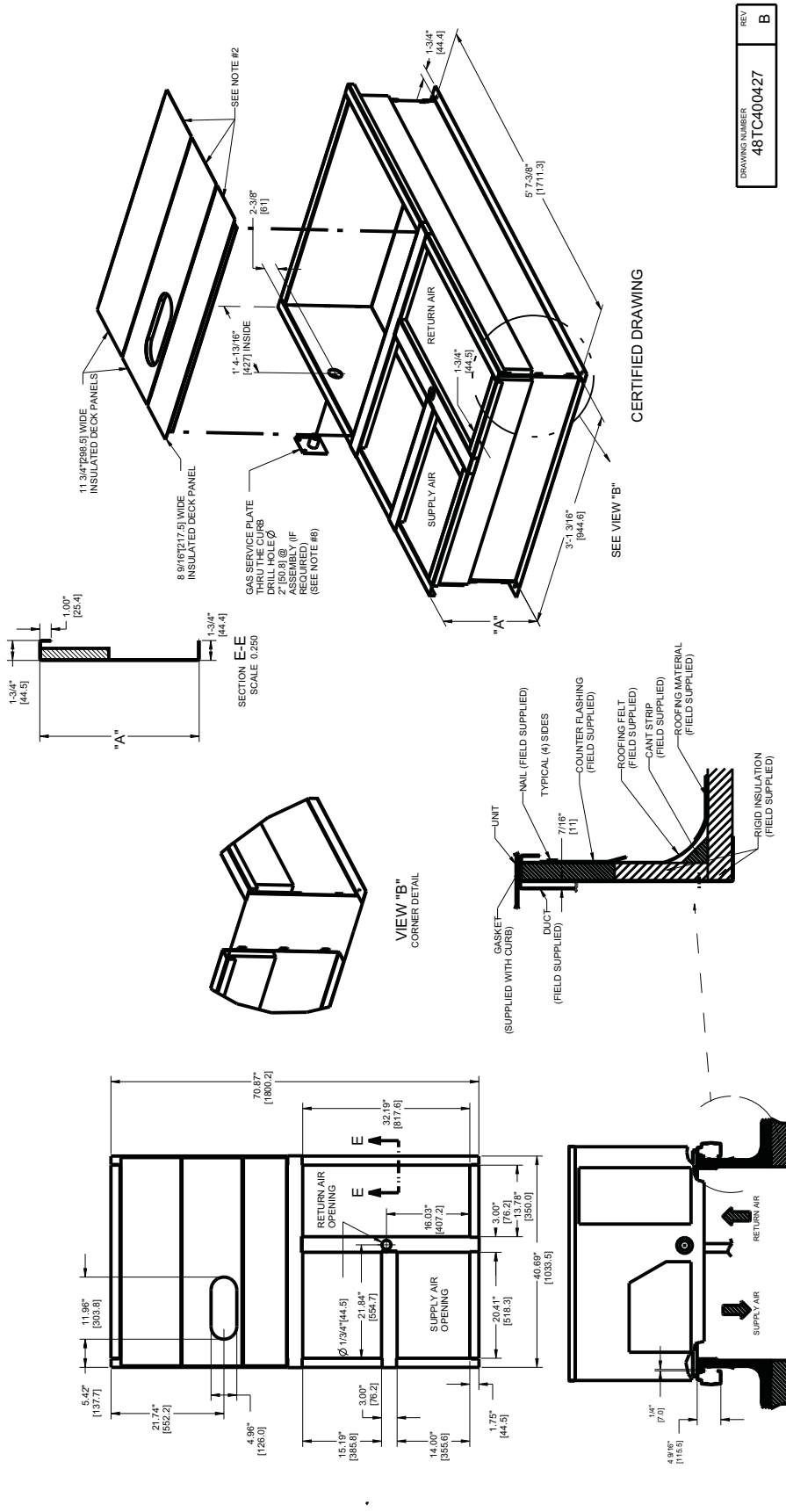

Fig. 4 - Roof Curb Details - 48TC 04-07

CURBS, WEIGHTS & DIMENSIONS (cont.)

NOTES:

1. DIMENSIONS ARE IN INCHES, DIMENSIONS IN [ ] ARE IN MILLIMETERS.
2. CENTER OF GRAVITY
3. DIRECTION OF AIR FLOW

	CONNECTION SIZES
A	1 3/8" [35] DIA FIELD POWER SUPPLY HOLE
B	2 1/2" [64] DIA POWER SUPPLY KNOCKOUT
C	1 3/4" [51] DIA GAUGE ACCESS PLUG
D	7/8" [22] DIA FIELD CONTROL WIRING HOLE
E	3/4"-14 NPT CONDENSATE DRAIN
F	1/2"-14 NPT GAS CONNECTION 3/4"-14 NPT GAS CONNECTION
G	2 " [51] DIA POWER SUPPLY KNOCK-OUT

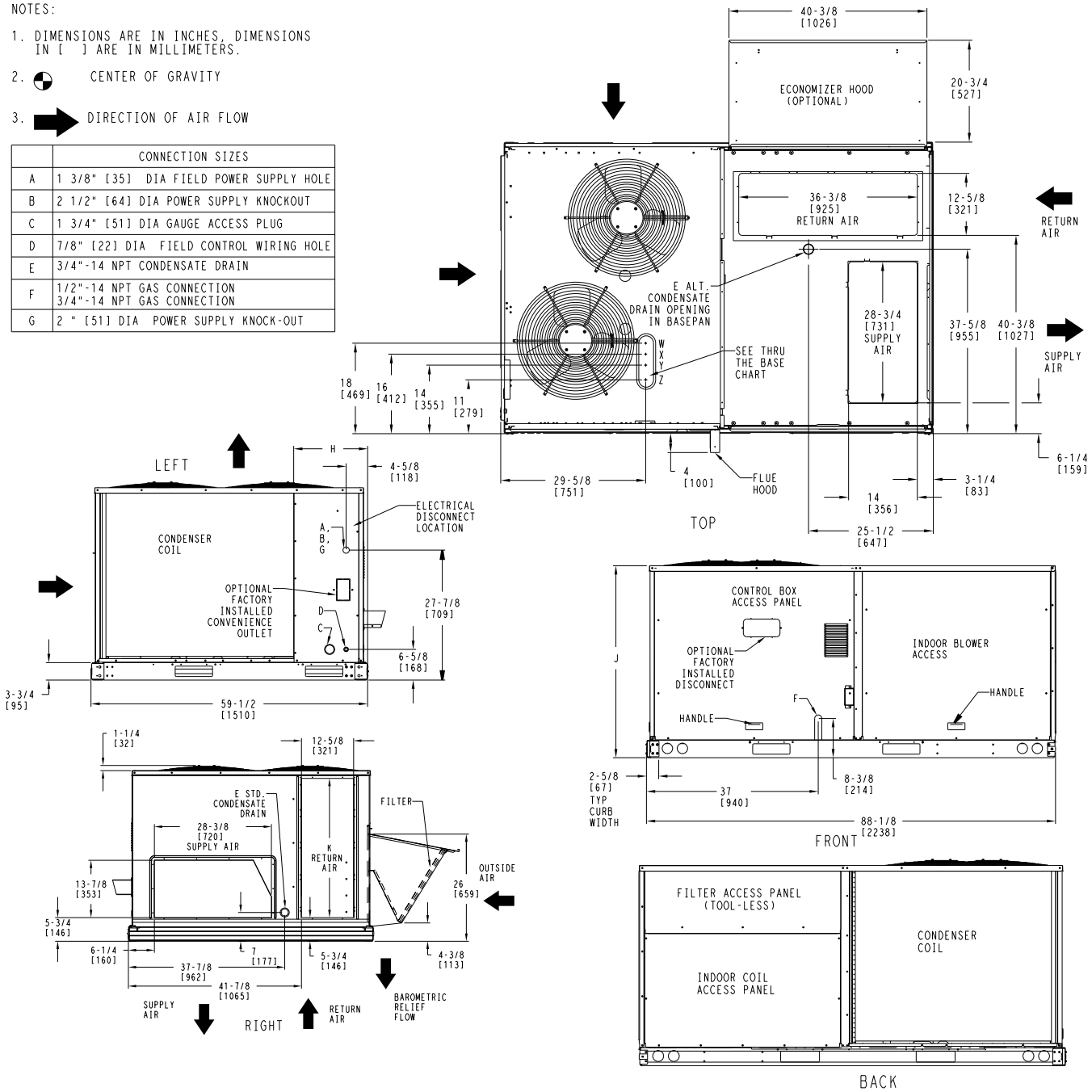

UNIT	OUTDOOR COIL TYPE	J	K	H
48TC-A08	RTPF	41 1/4 [1048]	33 3/4 [857]	15 7/8 [403]
48TC-A09	RTPF	49 3/8 [1253]	36 3/8 [925]	27 7/8 [708]
48TC-A12	RTPF	49 3/8 [1253]	36 3/8 [925]	15 7/8 [403]
48TC-D08	RTPF	41 1/4 [1048]	33 3/4 [857]	15 7/8 [403]
48TC-D09	RTPF	49 3/8 [1253]	36 3/8 [925]	15 7/8 [403]
48TC-D12	RTPF	49 3/8 [1253]	36 3/8 [925]	15 7/8 [403]
48TC-D08	MCHX	41 1/4 [1048]	33 3/4 [857]	23 [584.2]
48TC-D12	MCHX	49 3/8 [1253]	36 3/8 [925]	11 [279.4]
RTPF - ROUND TUBE, PLATE FIN (COPPER/ALUM) MCHX - NOVATION (ALUM/ALUM)				

THRU-THE-BASE CHART (FIELD INST)			
THESE HOLES REQUIRED FOR USE WITH ACCY KITS: CRBTMPWR002A01: GAS THRU CURB CRBTMPWR004A01: GAS THRU BASEPAN			
	THREADED CONDUIT SIZE	WIRE USE	REQ'D HOLE SIZES (MAX.)
W	1/2"	ACC.	7/8" [22.2]
X	1/2"	24V	7/8" [22.2]
Y	1 1/4" (002,004)	POWER	1 3/4" [44.4]
Z *	(004) 3/4" FPT	GAS	1 3/4" [44.4]
*	(002) PROVIDES 3/4" FPT THRU CURB FLANGE & FITTING. HOLE SIZE: 2" [50.8]		

THRU-THE-BASE CHART (FIOP)	
FOR "THRU-THE-BASEPAN" FACTORY OPTION, FITTINGS FOR ONLY X, Y, & Z ARE PROVIDED. **	
**	FOR BELOW LISTED MODELS, A FIELD SUPPLIED 1/2" ADAPTER IS REQUIRED BETWEEN BASE PAN FITTING AND GAS VALVE: 48TCD,S*08,09

C10298A

Fig. 5 - Dimensions 48TC 08-12

CURBS, WEIGHTS & DIMENSIONS (cont.)

UNIT	OUTDOOR COIL TYPE	STD. UNIT WEIGHT		CORNER WEIGHT (A)		CORNER WEIGHT (B)		CORNER WEIGHT (C)		CORNER WEIGHT (D)		C.G.		
		LBS.	KG.	LBS.	KG.	LBS.	KG.	LBS.	KG.	LBS.	KG.	X	Y	Z
48TC-A08	RTPF	780	354	178	81	158	72	209	95	236	107	41 1/2 [1054]	33 7/8 [860]	20 1/2 [521]
48TC-A09	RTPF	920	418	212	96	183	83	243	110	282	128	40 7/8 [1038]	34 [864]	23 1/8 [587]
48TC-A12	RTPF	930	422	216	98	196	89	247	112	272	123.5	42 [1067]	33 1/8 [841]	24 1/4 [616]
48TC-D08	RTPF	835	379	164	74.5	170	77.2	255	115.8	246	111.7	44 7/8 [1140]	35 5/8 [905]	19 3/8 [492]
48TC-D09	RTPF	930	422	228	103.5	187	85	232	105.3	283	128.5	39 3/4 [1010]	32 7/8 [835]	18 5/8 [473]
48TC-D12	RTPF	940	427	231	104.9	189	85.8	234	106.2	286	129.8	39 3/4 [1010]	33 [838]	18 1/2 [470]
48TC-D08	MCHX	805	365.5	160	72.6	153	69.5	240	109	260	118	43 [1092]	36 3/8 [924]	20 3/8 [517.7]
48TC-D12	MCHX	895	406.3	185	84	176	79.9	260	118	274	124.4	42 7/8 [1089]	35 1/2 [902]	22 7/8 [581]

RTPF - ROUND TUBE, PLATE FIN (COPPER/ALUM)
MCHX - NOVATION (ALUM/ALUM)

*** STANDARD UNIT WEIGHT IS WITH LOW GAS HEAT AND WITHOUT PACKAGING.
FOR OTHER OPTIONS AND ACCESSORIES, REFER TO THE PRODUCT DATA CATALOG.

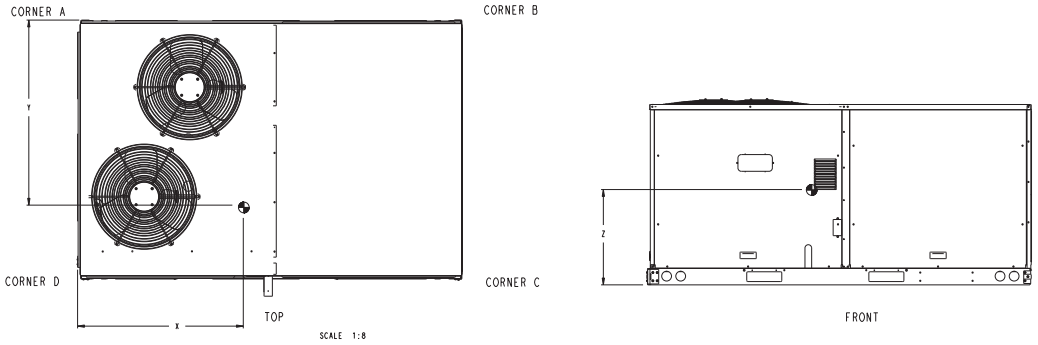

C10299

Fig. 6 - 48TC 08-12

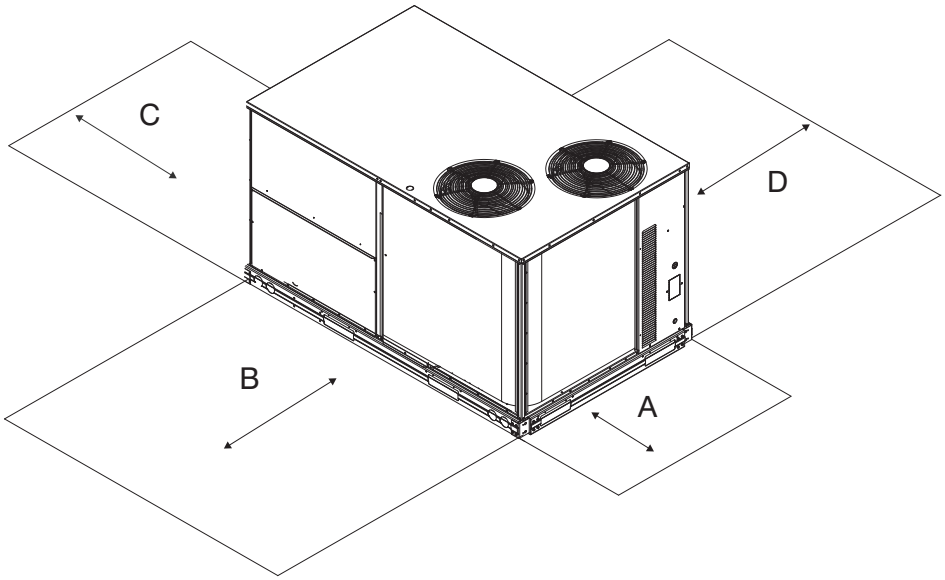

C11247

Fig. 7 - Service Clearance

LOC	DIMENSION	CONDITION
A	48–in (1219 mm)	Unit disconnect is mounted on panel
	36–in (914 mm)	If dimension–B is 12–in (305 mm)
	18–in (457 mm)	No disconnect, convenience outlet option
	18–in (457 mm)	Recommended service clearance (use electric screwdriver)
	12–in (305 mm)	Minimum clearance (use manual ratchet screwdriver)
B	36–in (914 mm)	Unit has economizer
	12–in (305 mm)	If dimension–A is 36–in (914 mm)
	Special	Check for sources of flue products within 10–ft of unit fresh air intake hood
C	36–in (914 mm)	Side condensate drain is used
	18–in (457 mm)	Minimum clearance
D	48–in (1219 mm)	No flue discharge accessory installed, surface is combustible material
	42–in (1067 mm)	Surface behind servicer is grounded (e.g., metal, masonry wall, another unit)
	36–in (914 mm)	Surface behind servicer is electrically non–conductive (e.g., wood, fiberglass)
	Special	Check for adjacent units or building fresh air intakes within 10–ft of this unit's flue outlet

NOTE: Unit not designed to have overhead obstruction. Contact Application Engineering for guidance on any application planning overhead obstruction or vertical clearances.

ROOF CURB ACCESSORY #	A
CRRFCURB003A01	14" [356]
CRRFCURB004A01	24" [610]

NOTES:
1. ROOFCURB ACCESSORY IS SHIPPED DISASSEMBLED.
2. INSULATED PANELS: 25.4 [1"] THK. POLYURETHANE FOAM, 44.5 [1-3/4] # DENSITY.
3. DIMENSIONS IN [ ] ARE IN MILLIMETERS.
4. ROOFCURB: 18 GAGE STEEL.
5. ATTACH DUCTWORK TO CURB. (FLANGES OF DUCT REST ON CURB).
6. SERVICE CLEARANCE 4 FEET ON EACH SIDE.
7. ▨ DIRECTION OF AIR FLOW.
8. CONNECTOR PACKAGE CRBTMPWR002A01 IS FOR THRU-THE-CURB GAS TYPE PACKAGE CRBTMPWR004A01 IS FOR THRU-THE-BOTTOM TYPE GAS CONNECTIONS.

CONNECTOR PKG. ACC.	GAS CONNECTION TYPE	GAS FITTING	POWER WIRING FITTING	CONTROL WIRING FITTING	ACCESSORY CONVENIENCE OUTLET WIRING CONNECTOR
CRBTMPWR002A01	THRU THE CURB	3/4" [19] NPT	1 1/4" [31.7] NPT	1/2" [12.7] NPT	1/2" [12.7] NPT
CRBTMPWR004A01	THRU THE BOTTOM				

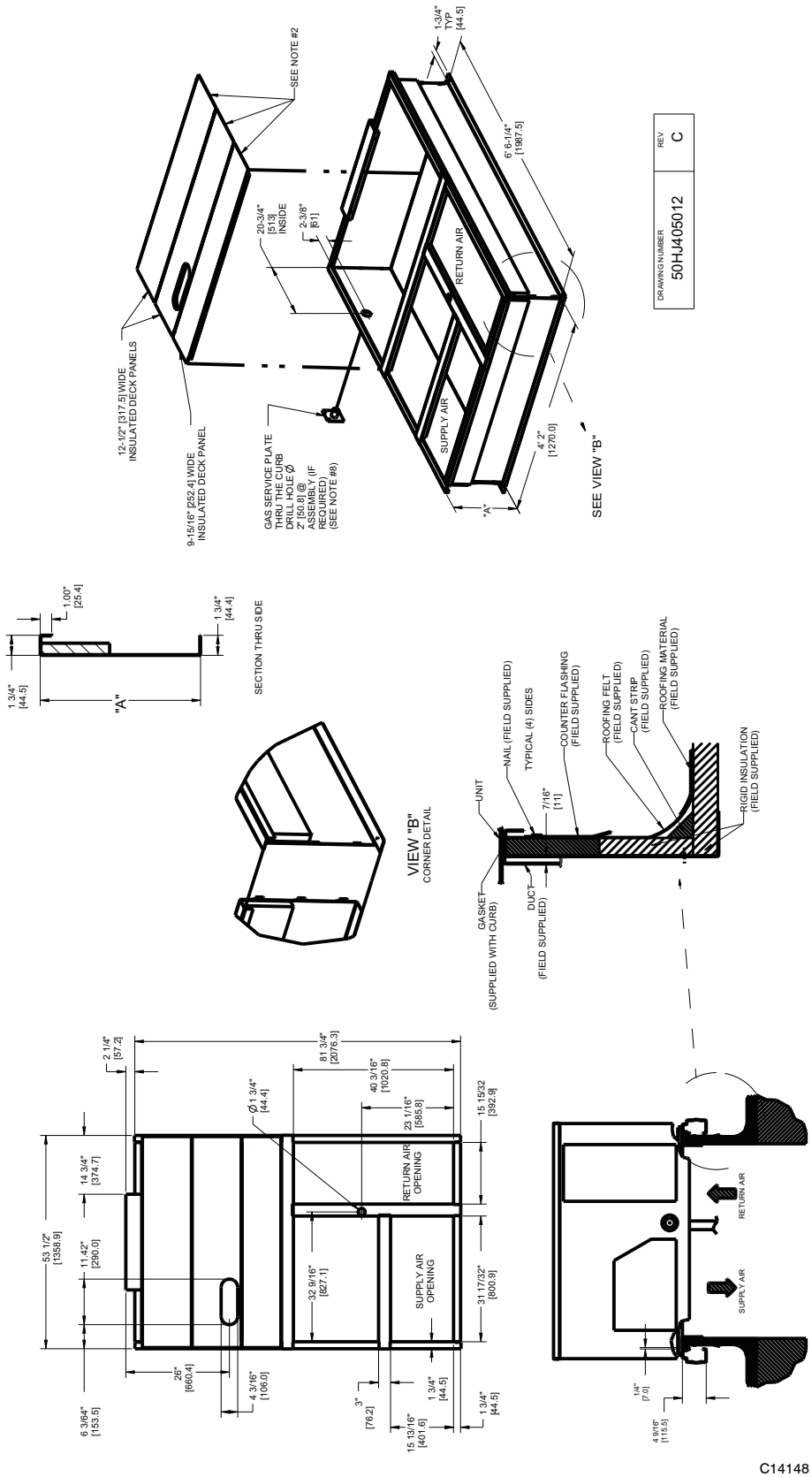

Fig. 8 - Roof Curb Details 48TC 08-14

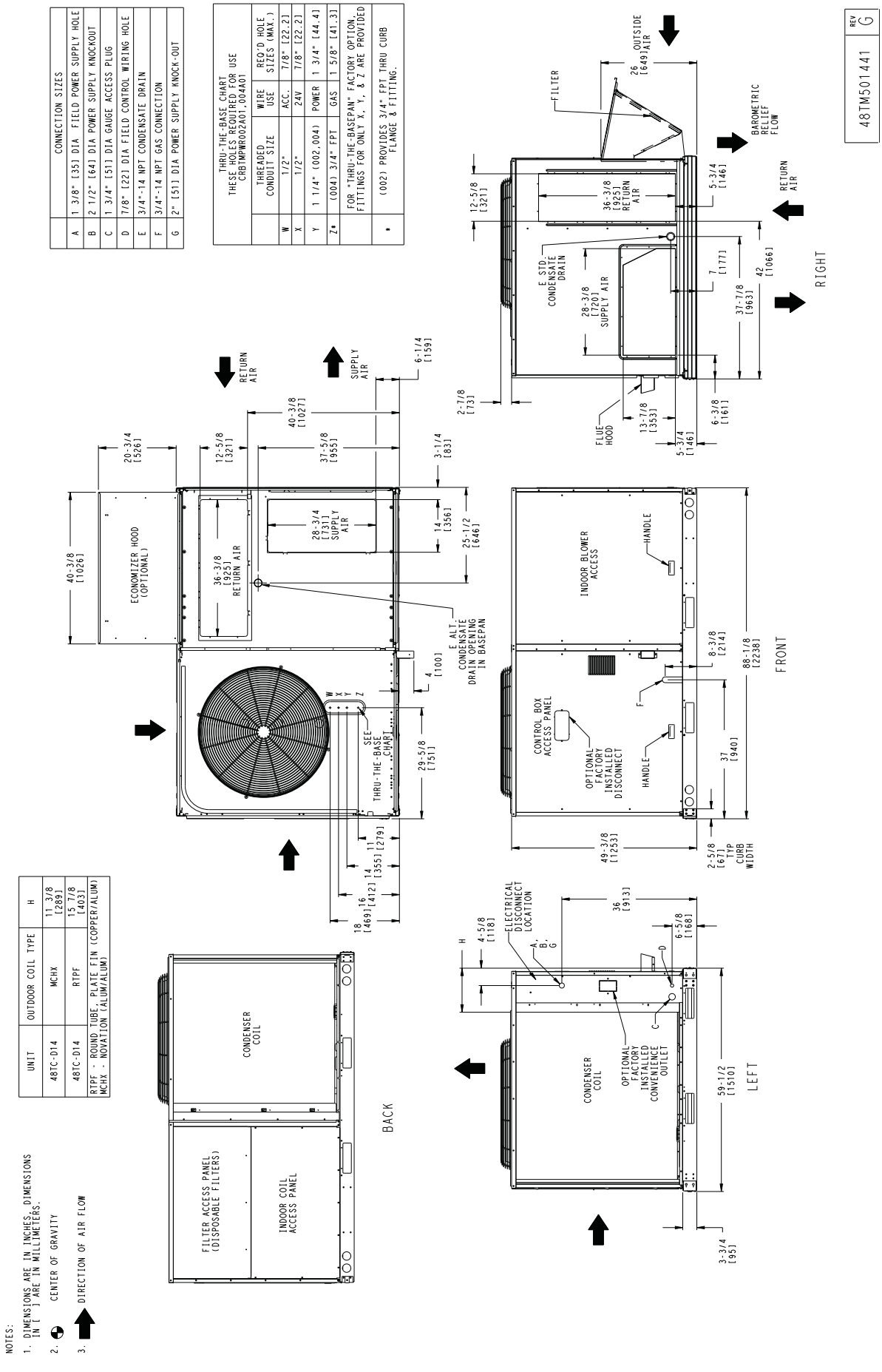

Fig. 9 – Dimensions 48TC 14

CURBS, WEIGHTS & DIMENSIONS (cont.)

UNIT	OUTDOOR COIL TYPE	STD. UNIT WEIGHT***		CORNER WEIGHT (A)		CORNER WEIGHT (B)		CORNER WEIGHT (C)		CORNER WEIGHT (D)		C.G.		
		LBS.	KG.	LBS.	KG.	LBS.	KG.	LBS.	KG.	LBS.	KG.	X	Y	Z
48TC-D14	MCHX	1116	506	297	135	157	71	229	104	434	197	29 1/2 [749]	34 1/4 [870]	20 1/4 [514]
48TC-D14	RTPF	1167	530	349	159	167	76	211	96	440	200	31 3/8 [797]	34 3/4 [883]	21 7/8 [556]
RTPF - ROUND TUBE, PLATE FIN (COPPER/ALUM) MCHX - MICROCHANNEL (ALUM/ALUM)														

*** STANDARD UNIT WEIGHT IS WITH LOW GAS HEAT AND WITHOUT PACKAGING.
FOR OTHER OPTIONS AND ACCESSORIES, REFER TO THE PRODUCT DATA CATALOG.

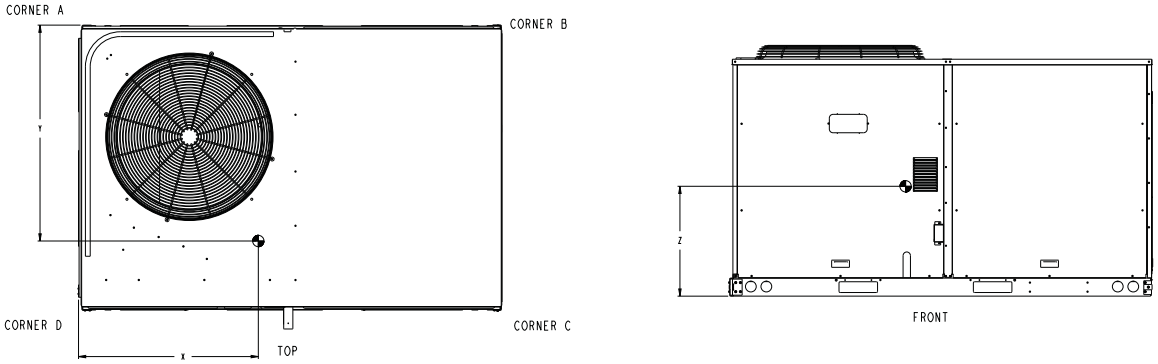

C14150

Fig. 10 - Dimensions 48TC 14

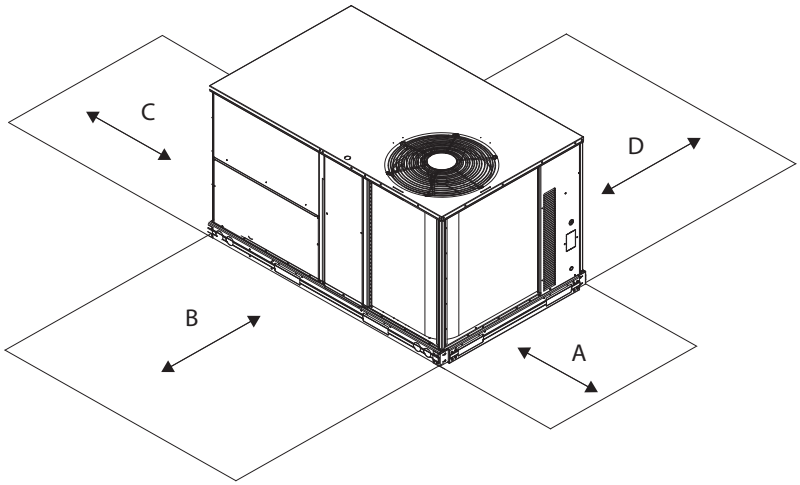

C08337

Fig. 11 - Service Clearance

LOC	DIMENSION	CONDITION
A	48–in (1219 mm)	Unit disconnect is mounted on panel
	36–in (914 mm)	If dimension–B is 12–in (305 mm)
	18–in (457 mm)	No disconnect, convenience outlet option
	18–in (457 mm)	Recommended service clearance (use electric screwdriver)
	12–in (305 mm)	Minimum clearance (use manual ratchet screwdriver)
B	36–in (914 mm)	Unit has economizer
	12–in (305 mm)	If dimension–A is 36–in (914 mm)
	Special	Check for sources of flue products within 10–ft of unit fresh air intake hood
C	36–in (914 mm)	Side condensate drain is used
	18–in (457 mm)	Minimum clearance
D	48–in (1219 mm)	No flue discharge accessory installed, surface is combustible material
	42–in (1067 mm)	Surface behind servicer is grounded (e.g., metal, masonry wall, another unit)
	36–in (914 mm)	Surface behind servicer is electrically non–conductive (e.g., wood, fiberglass)
	Special	Check for adjacent units or building fresh air intakes within 10–ft of this unit's flue outlet

NOTE: Unit not designed to have overhead obstruction. Contact Application Engineering for guidance on any application planning overhead obstruction or vertical clearances.

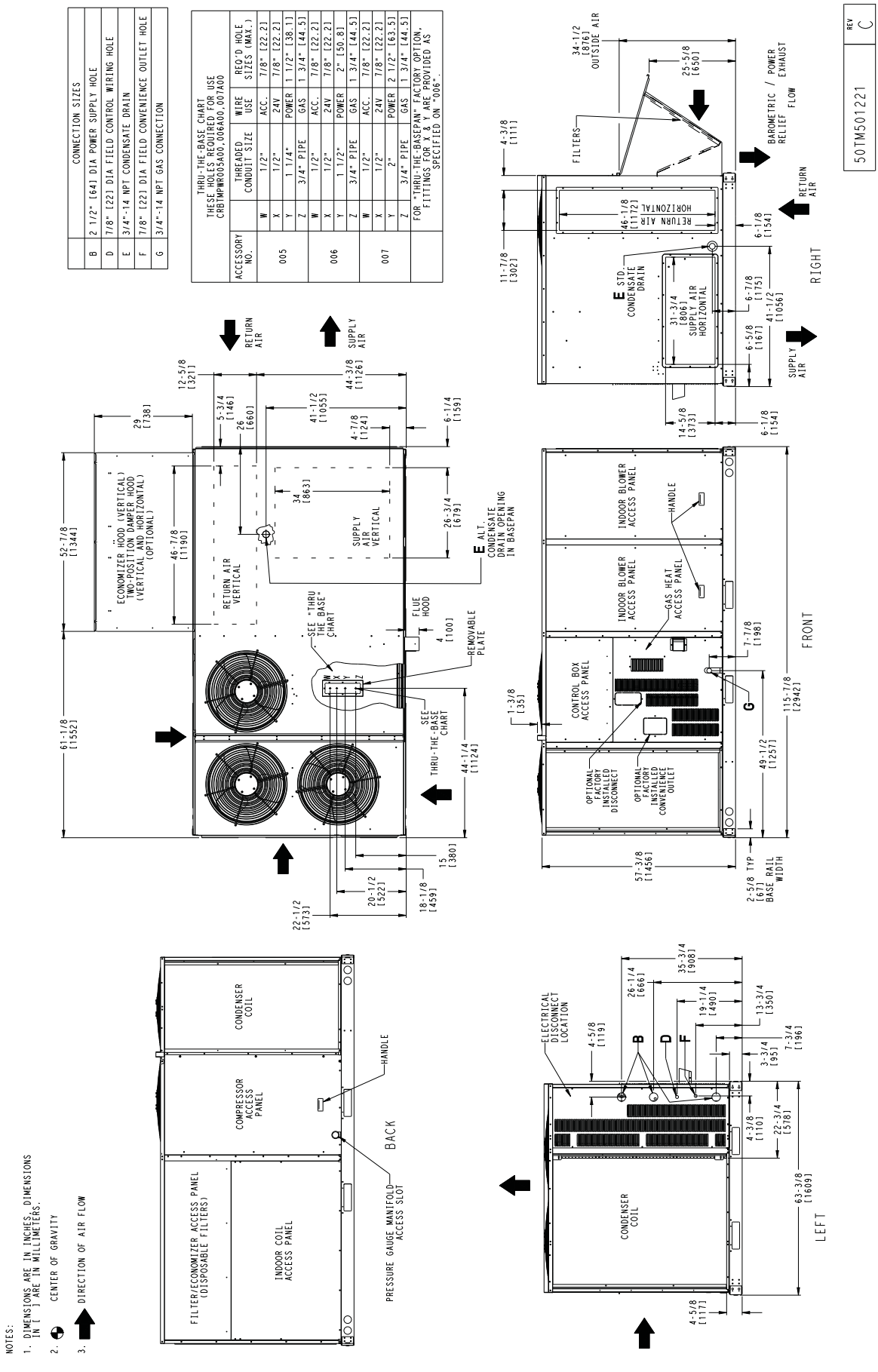

Fig. 12 – Dimensions 48TC 16

CURBS, WEIGHTS & DIMENSIONS (cont.)

UNIT	STD UNIT WEIGHT		CORNER WEIGHT (A)		CORNER WEIGHT (B)		CORNER WEIGHT (C)		CORNER WEIGHT (D)		C.G.		
	LBS.	KG.	LBS.	KG.	LBS.	KG.	LBS.	KG.	LBS.	KG.	X	Y	Z
48TC 16	1380	627	295	134	276	126	342	156	421	191	64 1/4 [1630]	35 [890]	21 1/8 [537]

STANDARD UNIT WEIGHT IS WITH LOW HEAT & WITHOUT PACKAGING.
FOR OPTIONS & ACCESSORIES, REFER TO THE PRODUCT DATA CATALOG.

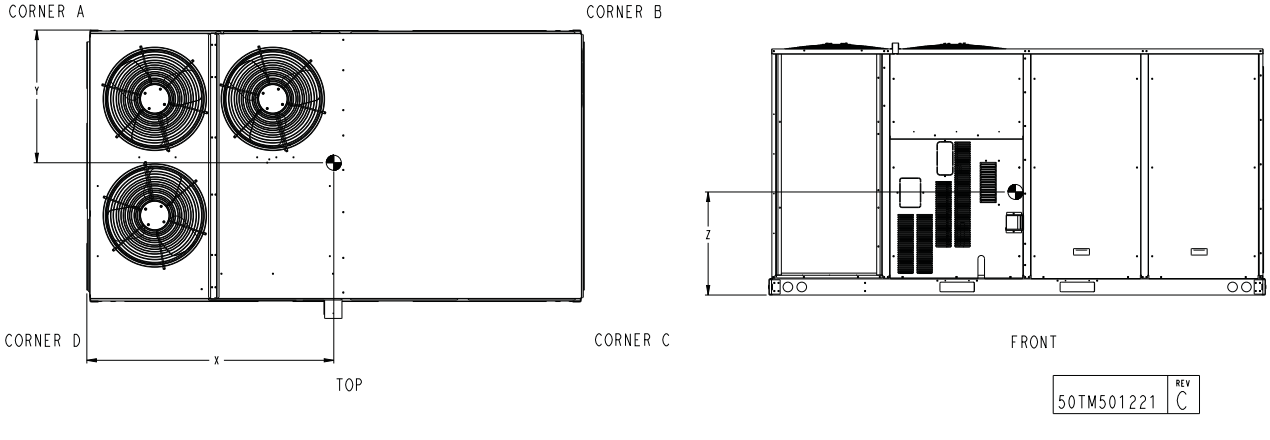

Fig. 13 - Dimensions 48TC 16

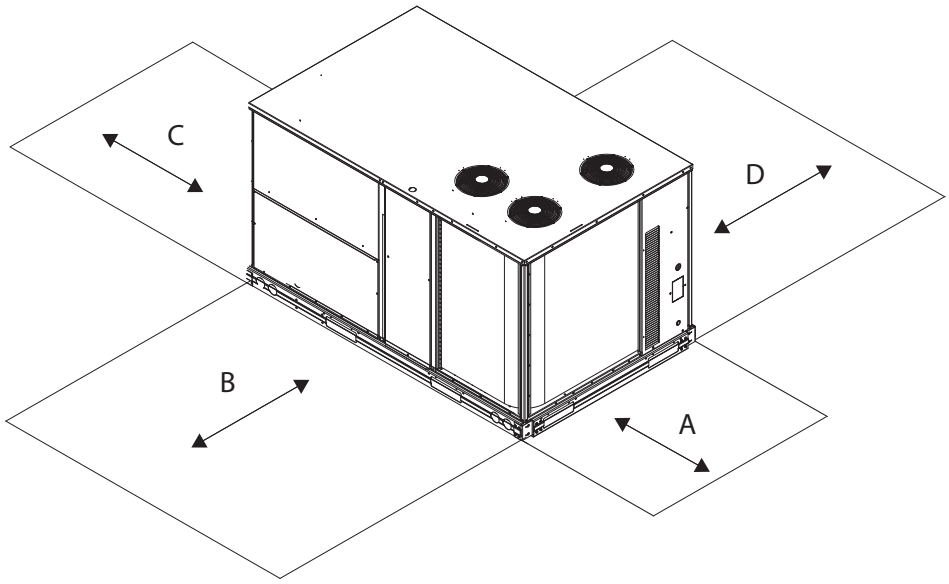

Fig. 14 - Service Clearance

LOC	DIMENSION	CONDITION
A	48–in (1219 mm)	Unit disconnect is mounted on panel
	18–in (457 mm)	No disconnect, convenience outlet option
	18–in (457 mm)	Recommended service clearance
	12–in (305 mm)	Minimum clearance
B	42–in (1067 mm)	Surface behind servicer is grounded (e.g., metal, masonry wall)
	36–in (914 mm)	Surface behind servicer is electrically non–conductive (e.g., wood, fiberglass)
	Special	Check for sources of flue products within 10–ft of unit fresh air intake hood
C	36–in (914 mm)	Side condensate drain is used
	18–in (457 mm)	Minimum clearance
D	48–in (1219 mm)	No flue discharge accessory installed, surface is combustible material
	42–in (1067 mm)	Surface behind servicer is grounded (e.g., metal, masonry wall, another unit)
	36–in (914 mm)	Surface behind servicer is electrically non–conductive (e.g., wood, fiberglass)
	Special	Check for adjacent units or building fresh air intakes within 10–ft of this unit's flue outlet

NOTE: Unit not designed to have overhead obstruction. Contact Application Engineering for guidance on any application planning overhead obstruction or vertical clearances.

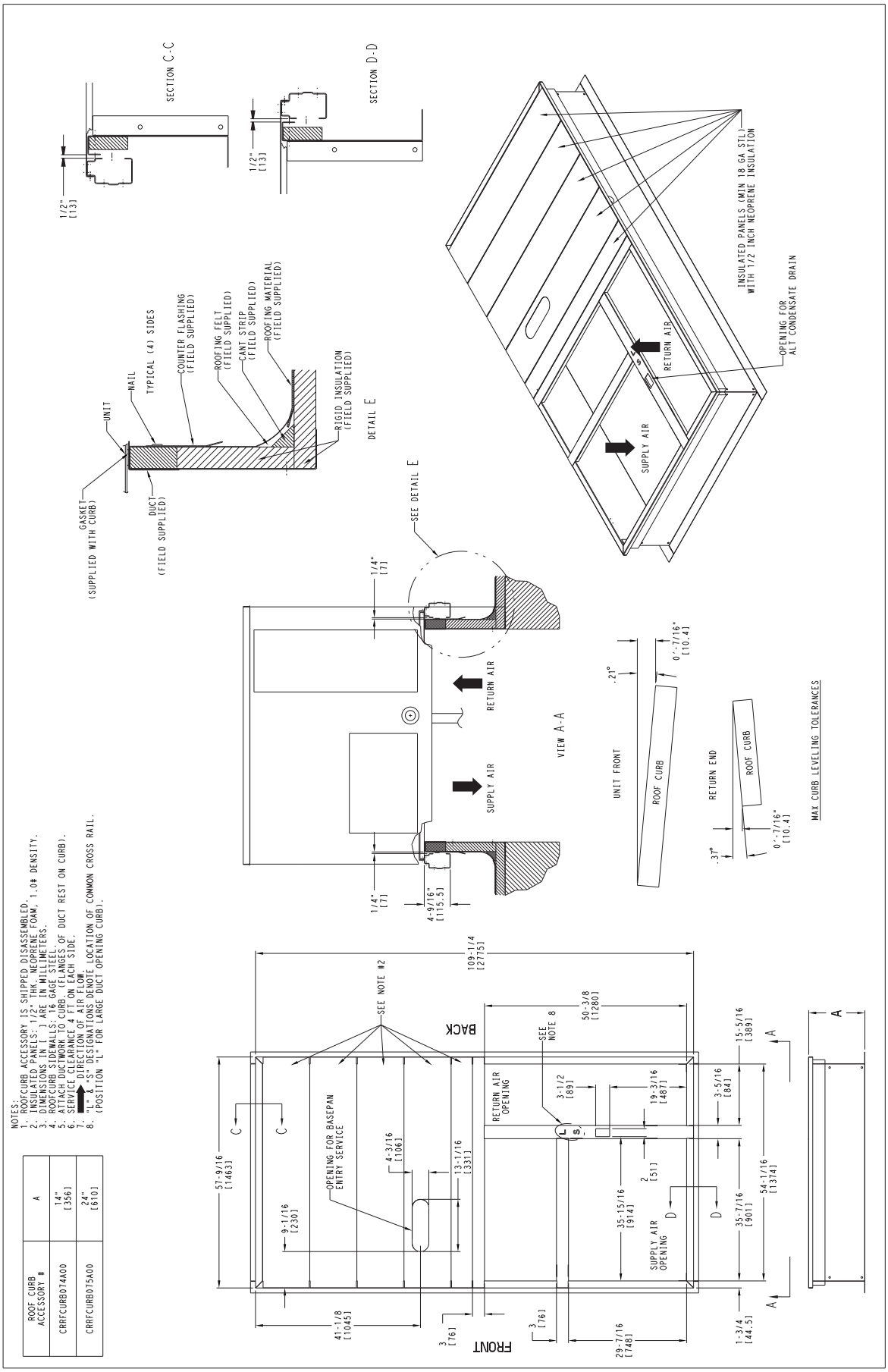

ROOF CURB ACCESSORY #	A
CRRFCURB074A00	14" [356]
CRRFCURB075A00	24" [610]

C10772B

Fig. 15 - Roof Curb Details 48TC 16

OPTIONS & ACCESSORY WEIGHTS

OPTION / ACCESSORY	OPTION / ACCESSORY WEIGHTS																	
	04		05		06		07		08		09		12		14		16	
	lb	kg	lb	kg	lb	kg	lb	kg	lb	kg	lb	kg	lb	kg	lb	kg	lb	kg
Humidi–MiZer[1]	50	23	50	23	50	23	55	25	80	36	80	36	80	36	85	39	90	41
Power Exhaust – vertical	50	23	50	23	50	23	50	23	74	34	74	34	74	34	74	34	103	47
Power Exhaust – horizontal	30	14	30	14	30	14	30	14	30	14	30	14	30	14	30	14	75	34
EconoMi$er(IV, X or 2)	50	23	50	23	50	23	50	23	74	34	74	34	74	34	74	34	103	47
Two Position damper	39	18	39	18	39	18	39	18	58	26	58	26	58	26	58	26	65	29
Manual Dampers	12	5	12	5	12	5	12	5	18	8	18	8	18	8	18	8	25	11
Medium Gas Heat	12	5	9	4	9	4	9	4	15	7	15	7	18	8	18	8	28	13
High Gas Heat	–	–	17	8	17	8	17	8	29	13	29	13	35	16	35	16	50	23
Hail Guard (louvered)	16	7	16	7	16	7	16	7	34	15	34	15	34	15	34	15	45	20
Cu/Cu Condenser Coil[2]	6	3	13	6	13	6	15	7	12	5	23	10	23	10	23	10	25	11
Cu/Cu Condenser and Evaporator Coils[2]	12	5	19	9	20	9	26	12	25	11	49	22	49	22	49	22	47	21
Roof Curb (14–in. curb)	115	52	115	52	115	52	115	52	143	65	143	65	143	65	143	65	180	82
Roof Curb (24–in. curb)	197	89	197	89	197	89	197	89	245	111	245	111	245	111	245	111	255	116
CO_2 sensor	5	2	5	2	5	2	5	2	5	2	5	2	5	2	5	2	5	2
Flue Discharge Deflector	7	3	7	3	7	3	7	3	7	3	7	3	7	3	7	3	–	–
Optional Indoor Motor/Drive	10	5	10	5	10	5	10	5	15	7	15	7	15	7	15	7	45	20
Motor Master Controller	35	16	35	16	35	16	35	16	35	16	35	16	35	16	40	18	40	18
Return Smoke Detector	5	2	5	2	5	2	5	2	5	2	5	2	5	2	5	2	5	2
Supply Smoke Detector	5	2	5	2	5	2	5	2	5	2	5	2	5	2	5	2	5	2
Non–Fused Disconnect	15	7	15	7	15	7	15	7	15	7	15	7	15	7	15	7	15	7
Powered Convenience outlet	35	16	35	16	35	16	35	16	35	16	35	16	35	16	35	16	35	16
Non–Powered Convenience outlet	5	2	5	2	5	2	5	2	5	2	5	2	5	2	5	2	5	2
Enthalpy Sensor	2	1	2	1	2	1	2	1	2	1	2	1	2	1	2	1	2	1
Differential Enthalpy Sensor	3	1	3	1	3	1	3	1	3	1	3	1	3	1	3	1	3	1
SAV System with VFD	–	–	–	–	–	–	–	–	20	9	20	9	20	9	20	9	20	9

NOTE: Where multiple variations are available, the heaviest combination is listed.

– Not Available

1 For Humidi–MiZer add MotorMaster Controller.

2 Where available.

APPLICATION DATA

Min operating ambient temp (cooling):

In mechanical cooling mode, your Carrier rooftop unit can safely operate down to an outdoor ambient temperature of 40°F (4°C) and 25°F (-4°C), with an accessory winter start kit. It is possible to provide cooling at lower outdoor ambient temperatures by using less outside air, economizers, and/or accessory low ambient kits.

Max operating ambient temp (cooling):

The maximum operating ambient temperature for cooling mode is 115°F (46°C). While cooling operation above 115°F (46°C) may be possible, it could cause either a reduction in performance, reliability, or a protective action by the unit's internal safety devices.

Min mixed air temp (heating):

Using the factory settings, the minimum temperatures for the mixed air (the combined temperature of the warm return air and the cold outdoor air) entering the dimpled, gas heat exchangers are:

Aluminized	Stainless Steel
50°F (10°C) continuous	40°F (4°C) continuous
45°F (7°C) intermittent	35°F (2°C) intermittent

Operating at lower mixed-air temperatures may be possible, if a field supplied, outdoor air thermostat initiates both heat stages when the temperature is less than the minimum temperatures listed above. Please contact your local Carrier representative for assistance.

Min and max airflow (heating and cooling):

To maintain safe and reliable operation of your rooftop, operate within the heating airflow limits during heating mode and cooling airflow limits during cooling mode. Operating above the max may cause blow-off, undesired airflow noise, or airflow related problems with the rooftop unit. Operating below the min may cause problems with coil freeze-up and unsafe heating operation. Heating and cooling limitations differ when evaluating operating cfm, the minimum value is the HIGHER of the cooling and heating minimum cfm values published in Table 6 and the maximum value is the LOWER of the cooling and heating maximum values published in Table 6.

Heating-to-cooling changeover:

Your unit will automatically change from heating to cooling mode when using a thermostat with an auto-changeover feature.

Airflow:

All units are draw-through in cooling mode and blow-through in heating mode.

Outdoor air application strategies:

Economizers reduce operating expenses and compressor run time by providing a free source of cooling and a means of ventilation to match application changing needs. In fact, they should be considered for most applications. Also, consider the various economizer control methods and their benefits, as well as sensors required to accomplish your application goals. Please contact your local Carrier representative for assistance.

Motor limits, Brake horsepower (BHP):

Due to internal design of Carrier units, the air path, and specially designed motors, the full horsepower (maximum continuous BHP) band, as listed in Table 8 and 10, can be used with the utmost confidence. There is no need for extra safety factors, as Carrier motors are designed and rigorously tested to use the entire, listed BHP range without either nuisance tripping or premature motor failure.

Propane heating:

Propane has different physical qualities than natural gas. As a result, propane requires different fuel to air mixture. To optimize the fuel/air mixture for propane, Carrier sells different burner orifices in an easy to install accessory kit. To select the correct burner orifices or determine the heat capacity for a propane application, use either the selection software, or the unit's service manual.

High altitude heating:

High altitudes have less oxygen, which affects the fuel/air mixture in heat exchangers. In order to maintain a proper fuel/air mixture, heat exchangers operating in altitudes above 2000 ft (610 m) require different orifices. To select the correct burner orifices or determine the heat capacity for a high altitude application, use either the selection software, or the unit's service manual.

High altitudes have less oxygen, which means heat exchangers need less fuel. The new gas orifices in this field installed kit make the necessary adjustment for high altitude applications. They restore the optimal fuel to air mixture and maintain healthy combustion on altitudes above 2000 ft (610 m).

NOTE: Typical natural gas heating value ranges from 975 to 1050 Btu/ft^3 at sea level nationally. The heating value goes down approximately 1.7% per every thousand feet elevation. Standard factory orifices can typically be used up to 2000 ft (610m) elevation without any operational issues.

NOTE: For installations in Canada, the input rating should be derated by 10% for altitudes from 2000 ft (610m) to 4500 ft (1372m) above sea level.

Sizing a rooftop

Bigger isn't necessarily better. While an air conditioner needs to have enough capacity to meet the design loads, it doesn't need excess capacity. In fact, excess capacity typically results in very poor part load performance and humidity control.

Using higher design temperatures than ASHRAE recommends for your location, adding "safety factors" to the calculated load, are all signs of oversizing air conditioners. Oversizing the air conditioner leads to poor humidity control, reduced efficiency, higher utility bills, larger indoor temperature swings, excessive noise, and increased wear and tear on the air conditioner.

Rather than oversizing an air conditioner, engineers should "right size" or even slightly undersize air conditioners. Correctly sizing an air conditioner controls humidity better; promotes efficiency; reduces utility bills; extends equipment life, and maintains even, comfortable temperatures. Please contact your local Carrier representative for assistance.

Low ambient applications

The optional Carrier economizer can adequately cool your space by bringing in fresh, cool outside air. In fact, when so equipped, accessory low ambient kit may not be necessary. In low ambient conditions, unless the outdoor air is excessively humid or contaminated, economizer based "free cooling" is the preferred less costly and energy conscious method.

In low ambient applications where outside air might not be desired (such as contaminated or excessively humid outdoor environments), your Carrier rooftop can operate at ambient temperatures down to -20°F (-29°C) using the recommended accessory Motormaster low ambient controller.

Staged Air Volume (SAV) with Variable Frequency Drive (VFD)

Carrier's Staged Air Volume (SAV) system utilizes a Variable Frequency Drive (VFD) to automatically adjust the indoor fan motor speed in sequence with the units cooling operation. Per ASHRAE 90.1 standard section 6.4.3.10.b, during the first stage of cooling operation the VFD will adjust the fan motor to provide 2/3rd of the total cfm established for the unit. When a call for the second stage of cooling is required, the VFD will allow the total cfm for the unit established (100%). During the heating mode, the VFD will allow total design cfm (100%) operation and during the ventilation mode the VFD will allow operation to 2/3rd of total cfm.

The VFD used in Carrier's SAV system has soft start capabilities to slowly ramp up the speeds, thus eliminating any high inrush air volume during initial start-up. It also has internal over current protection for the fan motor and a field installed display kit that allows adjustment and in depth diagnostics of the VFD.

This SAV system is available on models with 2-stage cooling operation with electrical mechanical or RTU Open (multi Protocol) controls. Both space sensor and conventional thermostats/controls can be used to provide accurate control in any application.

The SAV system is very flexible for initial fan performance set up and adjustment. The standard factory shipped VFD is pre programmed to automatically stage the fan speed between the first and second stage of cooling. The unit fan performance static pressure and cfm can be easily adjusted using the traditional means of pulley adjustments. The other means to adjust the unit static and cfm performance is to utilize the field installed display module and adjust the frequency and voltage in the VFD to required performance requirements. In either case, once set up the VFD will automatically adjust the speed between the cooling stage operation.

48TC - Staged Air volume (SAV) - Variable Frequency Drive (VFD) HP Rating

UNIT SIZE	VOLTAGE	STATIC OPTION	VFD HP RATING
08	208/230, 460, 575	STD	3
	208/230, 460	MED	3
	575	MED	5
	208/230, 460, 575	HIGH	7.5
09	208/230, 460, 575	STD	3
	208/230, 460, 575	MED	3
	208/230, 460, 575	HIGH	5
12	208/230, 460, 575	STD	3
	208/230, 460, 575	MED	5
	208/230, 460, 575	HIGH	7.5
14	208/230, 460	STD	3
	575	STD	5
	208/230, 460, 575	MED	5
	208/230, 460, 575	HIGH	7.5
16	208/230. 460	STD	3
	575	STD	5
	208/230, 460, 575	MED	5
	208/230, 460, 575	HIGH	7.5

SELECTION PROCEDURE (WITH 48TC*A07 EXAMPLE)[1]

I. Determine cooling and heating loads.

Given:

Mixed air dry bulb	80°F (27°C)
Mixed air wet bulb	67°F (19°C)
Ambient dry bulb	95°F (35°C)
TC_{Load}	72.0 MBH
SHC_{Load}	54.0 MBH
Vertical supply air	2100 CFM
Heating load	85.0 MBH
External static pressure	0.67 in. wg
Electrical characteristics	230-3-60

II. Make an initial guess at cooling tons.

Refrig. tons = TC_{Load} / 12 MBH per ton
Refrig. tons = 72.0 / 12 = 6.0 tons
In this case, start by looking at the 48TC**07.

III. Look up the rooftop's TC and SHC.

Table 19 shows that, at the application's supply air CFM, mixed air and ambient temperatures, the 48TC*A07 supplies:
TC = 73.7 MBH[2]
SHC = 54.4 MBH[2]

IV. Calculate the building latent heat load.

$LC_{Load} = TC_{Load} - SHC_{Load}$
LC_{Load} = 72.0 MBH - 54.0 MBH = 18.0 MBH

V. Calculate RTU latent heat capacity.

LC = TC - SHC
LC = 73.7 MBH - 54.4 MBH = 19.3 MBH

VI. Compare RTU capacities to loads.[3]

Compare the rooftop's SHC and LC to the building's sensible and latent heat loads.

VII. Select factory options (FIOP)

Local code requires an economizer for any unit with TC greater than 65.0 MBH.

VIII. Calculate the total static pressure.

External static pressure	0.67 in. wg
Sum of FIOP / Accessory static	+0.13 in. wg
Total Static Pressure	0.80 in. wg

IX. Look up the indoor fan RPM & BHP.

Table 47 shows, at 2100 CFM & ESP= 0.8,
RPM = 1358 & BHP = 1.52

X. Convert BHP (Step VIII) into fan motor heat.

Fan motor heat = 2.546* BHP/Motor Eff.[4]
Fan motor heat = 4.9 MBH

XI. Calculate RTU heating capacity.

Building heating load	85.0 MBH
Fan motor heat	-4.9 MBH
Required heating capacity	80.1 MBH

XII. Select a gas heater.

Table 3 shows the heating capacities of the 48TCEA07 = 93.0 MBH. Select the 48TCEA07

XIII. Determine electrical requirements.

The MCA and MOCP tables show 48TC*A07 (without convenience outlet) as:
MCA = 30.5 amps & MOCP = 45.0 amps
Min. disconnect size: FLA = 30 & LRA = 157.

Legend

BHP	—	Brake horsepower
FLA	—	Full load amps
LC	—	Latent capacity
LRA	—	Lock rotor amp
MBH	—	(1,000) BTUH
MCA	—	Min. circuit ampacity
MOCP	—	Max. over–current protection
RPM	—	Revolutions per minute
RTU	—	Rooftop unit
SHC	—	Sensible heat capacity
TC	—	Total capacity

NOTES:

1. Selection software by Carrier saves time by performing many of the steps above. Contact your Carrier sales representative for assistance.
2. Unit ratings are gross capacities and do not include the effect of evaporator fan motor heat. See Step X. for determining amount of evaporator fan motor heat to subtract from total and sensible capacities to obtain net cooling and net sensible capacities.
3. Selecting a unit with a SHC slightly lower than the SHC_{Load} is often better than oversizing. Slightly lower SHC's will help control indoor humidity, and prevent temperature swings.
4. Indoor fan motor efficiency is available in the Electrical Information. Use the decimal form in the equation, eg. 80% = .8.

Table 13 – COOLING CAPACITIES 1-STAGE COOLING 3 TONS

48TC*A04 (RTPF)				AMBIENT TEMPERATURE											
				85			95			105			115		
				EAT (db)			EAT (db)			EAT (db)			EAT (db)		
				75	80	85	75	80	85	75	80	85	75	80	85
900 Cfm	EAT (wb)	58	TC	28.1	28.1	31.7	26.3	26.3	29.8	24.5	24.5	27.7	22.6	22.6	25.5
			SHC	24.4	28.1	31.7	22.9	26.3	29.8	21.3	24.5	27.7	19.6	22.6	25.5
		62	TC	30.3	30.3	31.0	27.8	27.8	29.8	25.1	25.1	28.4	22.6	22.6	26.5
			SHC	22.6	26.8	31.0	21.5	25.7	29.8	20.2	24.3	28.4	18.7	22.6	26.5
		67	TC	35.5	35.5	35.5	33.1	33.1	33.1	30.5	30.5	30.5	27.5	27.5	27.5
			SHC	19.5	23.7	27.9	18.5	22.7	26.9	17.4	21.6	25.8	16.2	20.4	24.6
		72	TC	39.0	39.0	39.0	37.1	37.1	37.1	35.1	35.1	35.1	32.7	32.7	32.7
			SHC	15.3	19.5	23.7	14.5	18.8	23.0	13.7	17.9	22.2	12.9	17.1	21.3
		76	TC	–	41.4	41.4	–	39.6	39.6	–	37.6	37.6	–	35.4	35.4
			SHC	–	16.0	21.0	–	15.4	20.2	–	14.6	19.3	–	13.8	18.3
1050 Cfm	EAT (wb)	58	TC	30.2	30.2	34.2	28.4	28.4	32.2	26.5	26.5	30.0	24.5	24.5	27.7
			SHC	26.3	30.2	34.2	24.7	28.4	32.2	23.1	26.5	30.0	21.3	24.5	27.7
		62	TC	31.9	31.9	34.2	29.4	29.4	32.8	26.7	26.7	31.2	24.5	24.5	28.8
			SHC	24.6	29.4	34.2	23.4	28.1	32.8	22.0	26.6	31.2	20.3	24.5	28.8
		67	TC	36.7	36.7	36.7	34.8	34.8	34.8	32.2	32.2	32.2	29.1	29.1	29.1
			SHC	20.6	25.4	30.2	19.8	24.6	29.4	18.8	23.6	28.4	17.6	22.4	27.2
		72	TC	40.1	40.1	40.1	38.2	38.2	38.2	36.1	36.1	36.1	33.7	33.7	33.7
			SHC	15.7	20.5	25.3	15.0	19.8	24.6	14.2	19.0	23.8	13.4	18.2	23.0
		76	TC	–	42.4	42.4	–	40.6	40.6	–	38.5	38.5	–	36.2	36.2
			SHC	–	16.6	22.2	–	15.9	21.3	–	15.2	20.4	–	14.4	19.5
1200 Cfm	EAT (wb)	58	TC	32.2	32.2	36.4	30.4	30.4	34.3	28.4	28.4	32.1	26.3	26.3	29.7
			SHC	28.0	32.2	36.4	26.4	30.4	34.3	24.7	28.4	32.1	22.8	26.3	29.7
		62	TC	33.3	33.3	37.0	30.8	30.8	35.5	28.4	28.4	33.4	26.3	26.3	30.9
			SHC	26.4	31.7	37.0	25.1	30.3	35.5	23.4	28.4	33.4	21.7	26.3	30.9
		67	TC	37.7	37.7	37.7	35.6	35.6	35.6	33.4	33.4	33.4	30.4	30.4	30.4
			SHC	21.7	27.0	32.4	20.9	26.3	31.6	20.0	25.4	30.8	18.8	24.2	29.6
		72	TC	40.9	40.9	40.9	39.0	39.0	39.0	36.9	36.9	36.9	34.4	34.4	34.4
			SHC	16.1	21.5	26.8	15.4	20.8	26.1	14.7	20.0	25.4	13.8	19.2	24.5
		76	TC	–	43.1	43.1	–	41.3	41.3	–	39.1	39.1	–	36.8	36.8
			SHC	–	17.1	23.1	–	16.4	22.3	–	15.7	21.4	–	14.9	20.5
1350 Cfm	EAT (wb)	58	TC	–	–	–	32.1	32.1	36.3	30.0	30.0	34.0	27.9	27.9	31.5
			SHC	–	–	–	27.9	32.1	36.3	26.1	30.0	34.0	24.2	27.9	31.5
		62	TC	28.4	28.4	30.5	32.2	32.2	37.8	30.1	30.1	35.3	27.9	27.9	32.8
			SHC	17.6	24.1	30.5	26.6	32.2	37.8	24.8	30.1	35.3	23.0	27.9	32.8
		67	TC	33.2	33.2	33.2	36.4	36.4	36.4	34.1	34.1	34.1	31.5	31.5	32.0
			SHC	15.0	21.4	27.9	21.9	27.8	33.7	21.0	26.9	32.9	20.0	26.0	32.0
		72	TC	37.5	37.5	37.5	39.7	39.7	39.7	37.5	37.5	37.5	35.0	35.0	35.0
			SHC	11.8	18.3	24.8	15.8	21.7	27.5	15.0	20.9	26.8	14.2	20.1	26.0
		76	TC	–	40.1	40.1	–	41.8	41.8	–	39.6	39.6	–	37.3	37.3
			SHC	–	15.3	22.7	–	16.8	23.2	–	16.1	22.3	–	15.3	21.5
1500 Cfm	EAT (wb)	58	TC	28.1	28.1	34.2	33.7	33.7	38.1	31.6	31.6	35.7	29.3	29.3	33.2
			SHC	21.9	28.1	34.2	29.3	33.7	38.1	27.4	31.6	35.7	25.5	29.3	33.2
		62	TC	30.3	30.3	33.8	33.7	33.7	39.6	31.6	31.6	37.1	29.4	29.4	34.5
			SHC	19.8	26.8	33.8	27.8	33.7	39.6	26.1	31.6	37.1	24.2	29.4	34.5
		67	TC	35.5	35.5	35.5	36.9	36.9	36.9	34.6	34.6	34.9	32.0	32.0	34.0
			SHC	16.7	23.7	30.7	22.8	29.2	35.7	21.9	28.4	34.9	21.0	27.5	34.0
		72	TC	39.0	39.0	39.0	40.2	40.2	40.2	38.0	38.0	38.0	35.5	35.5	35.5
			SHC	12.4	19.5	26.6	16.1	22.5	28.8	15.4	21.7	28.1	14.6	21.0	27.4
		76	TC	–	41.4	41.4	–	42.2	42.2	–	40.0	40.0	–	–	–
			SHC	–	16.0	24.3	–	17.2	24.0	–	16.5	23.2	–	–	–

LEGEND:

– – Do not operate
Cfm – Cubic feet per minute (supply air)
EAT(db) – Entering air temperature (dry bulb)
EAT(wb) – Entering air temperature (wet bulb)
SHC – Sensible heat capacity
TC – Total capacity

48TC04 (3 TONS) – UNIT WITH HUMIDI–MIZER SYSTEM IN SUBCOOLING MODE										
Air Entering Evaporator – CFM										
Temp (F) Air Ent Condenser (Edb)		80 dry bulb			80 dry bulb			80 dry bulb		
		72 wet bulb			67 wet bulb			62 wet bulb		
		900	1200	1500	900	1200	1500	900	1200	1500
75	TC	40.6	43.2	45.3	37.0	39.4	41.3	33.4	35.6	37.4
	SHC	21.6	23.9	25.6	25.6	27.7	29.3	29.6	31.6	33.1
	kW	2.0	2.0	2.0	2.0	2.0	2.0	2.0	2.0	2.0
85	TC	37.0	39.6	41.7	33.6	36.0	37.9	30.2	32.3	34.1
	SHC	17.7	20.2	22.2	22.7	25.0	26.9	27.7	29.9	31.6
	kW	2.3	2.3	2.3	2.3	2.3	2.3	2.3	2.3	2.3
95	TC	33.5	36.0	38.1	30.2	32.5	34.4	26.9	29.1	30.8
	SHC	13.7	16.6	18.8	19.7	22.4	24.4	25.7	28.2	30.1
	kW	2.6	2.6	2.6	2.5	2.5	2.5	2.5	2.5	2.5
105	TC	29.9	32.4	34.5	26.8	29.1	31.0	23.6	25.8	27.5
	SHC	9.8	12.9	15.3	16.8	19.7	22.0	23.8	26.5	28.6
	kW	2.9	2.9	2.9	2.8	2.8	2.8	2.8	2.8	2.8
115	TC	26.3	28.8	30.9	23.3	25.7	27.5	20.4	22.5	24.2
	SHC	5.8	9.2	11.9	13.8	17.0	19.5	21.9	24.8	27.1
	kW	3.2	3.2	3.2	3.1	3.1	3.1	3.1	3.1	3.1

48TC04 (3 TONS) – UNIT WITH HUMIDI–MIZER SYSTEM IN HOT GAS REHEAT MODE										
Air Entering Evaporator – CFM										
Temp (F) Air Ent Condenser (Edb)		75 dry bulb			75 dry bulb			75 dry bulb		
		62.5 wet bulb (50% relative)			64 wet bulb (55% relative)			65.3 wet bulb (60% relative)		
		1050	1200	1350	1050	1200	1350	1050	1200	1350
80	TC	14.7	15.5	16.2	15.9	16.7	17.4	16.9	17.7	18.4
	SHC	6.7	7.6	8.5	4.8	5.7	6.6	3.2	4.1	5.0
	kW	2.0	2.0	2.0	2.0	2.0	2.0	2.0	2.0	2.0
75	TC	15.1	15.8	16.4	16.2	17.0	17.6	17.2	18.0	18.6
	SHC	7.5	8.4	9.2	5.8	6.7	7.5	4.4	5.2	6.0
	kW	1.9	1.9	1.9	2.0	2.0	2.0	2.0	2.0	2.0
70	TC	15.5	16.1	16.7	16.6	17.3	17.9	17.5	18.2	18.8
	SHC	8.4	9.3	10.0	6.9	7.7	8.5	5.5	6.4	7.1
	kW	1.9	1.9	1.9	1.9	1.9	1.9	1.9	1.9	1.9
60	TC	16.2	16.8	17.3	17.2	17.8	18.3	18.1	18.7	19.2
	SHC	10.2	10.9	11.6	8.9	9.7	10.4	7.8	8.6	9.3
	kW	1.8	1.8	1.8	1.8	1.8	1.8	1.9	1.9	1.9
50	TC	17.0	17.5	17.9	17.9	18.4	18.8	18.7	19.2	19.6
	SHC	11.9	12.6	13.2	11.0	11.6	12.2	10.1	10.8	11.4
	kW	1.7	1.7	1.7	1.8	1.8	1.8	1.8	1.8	1.8
40	TC	17.7	18.1	18.5	18.6	19.0	19.3	19.3	19.7	20.1
	SHC	13.7	14.3	14.8	13.0	13.6	14.1	12.4	13.0	13.5
	kW	1.7	1.7	1.7	1.7	1.7	1.7	1.7	1.7	1.7

LEGEND

Edb – Entering Dry–Bulb
Ewb – Entering Wet–Bulb
kW – Compressor Motor Power Input
ldb – Leaving Dry–Bulb
lwb – Leaving Wet–Bulb
SHC – Sensible Heat Capacity (1000 Btuh) Gross
TC – Total Capacity (1000 Btuh) Gross

NOTES:

1. Direct interpolation is permissible. Do not extrapolate.
2. The following formulas may be used:

$$t_{ldb} = t_{edb} - \frac{\text{sensible capacity (Btuh)}}{1.10 \times \text{cfm}}$$

t_{lwb} = Wet–bulb temperature corresponding to enthalpy of air leaving evaporator coil (h_{lwb})

$$h_{lwb} = h_{ewb} - \frac{\text{total capacity (Btuh)}}{4.5 \times \text{cfm}}$$

Where: h_{ewb} = Enthalpy of air entering evaporator coil

Table 15 – COOLING CAPACITIES 1-STAGE COOLING 4 TONS

48TC*A05 (RTPF)				AMBIENT TEMPERATURE											
				85			95			105			115		
				EAT (db)			EAT (db)			EAT (db)			EAT (db)		
				75	80	85	75	80	85	75	80	85	75	80	85
1200 Cfm	EAT (wb)	58	TC	–	–	–	–	–	–	36.1	36.1	40.7	34.3	34.3	38.6
			SHC	–	–	–	–	–	–	31.5	36.1	40.7	29.9	34.3	38.6
		62	TC	43.1	43.1	43.1	40.8	40.8	40.8	38.4	38.4	39.4	35.9	35.9	38.2
			SHC	31.2	36.4	41.7	30.1	35.3	40.6	28.9	34.1	39.4	27.8	33.0	38.2
		67	TC	47.4	47.4	47.4	45.2	45.2	45.2	42.9	42.9	42.9	40.3	40.3	40.3
			SHC	25.9	31.2	36.4	25.0	30.2	35.5	23.9	29.2	34.4	22.9	28.2	33.4
		72	TC	51.1	51.1	51.1	49.1	49.1	49.1	46.8	46.8	46.8	43.9	43.9	43.9
			SHC	20.1	25.5	30.9	19.4	24.7	30.1	18.4	23.7	29.0	17.4	22.7	28.0
		76	TC	–	53.3	53.3	–	51.5	51.5	–	49.2	49.2	–	45.9	45.9
			SHC	–	20.8	27.4	–	20.2	26.8	–	19.3	25.7	–	18.3	24.6
1400 cfm	EAT (wb)	58	TC	41.9	41.9	47.3	40.1	40.1	45.3	38.2	38.2	43.2	36.3	36.3	41.0
			SHC	36.6	41.9	47.3	35.0	40.1	45.3	33.3	38.2	43.2	31.7	36.3	41.0
		62	TC	44.6	44.6	45.4	42.3	42.3	44.2	39.8	39.8	42.9	37.3	37.3	41.6
			SHC	33.4	39.4	45.4	32.3	38.3	44.2	31.0	37.0	42.9	29.8	35.7	41.6
		67	TC	48.7	48.7	48.7	46.6	46.6	46.6	44.2	44.2	44.2	41.4	41.4	41.4
			SHC	27.3	33.2	39.2	26.4	32.3	38.3	25.3	31.3	37.3	24.2	30.2	36.2
		72	TC	52.2	52.2	52.2	50.3	50.3	50.3	47.8	47.8	47.8	44.8	44.8	44.8
			SHC	20.6	26.7	32.7	19.9	25.9	32.0	18.9	24.9	30.9	17.9	23.8	29.7
		76	TC	–	54.1	54.1	–	52.3	52.3	–	49.9	49.9	–	46.4	46.4
			SHC	–	21.5	29.0	–	20.8	28.0	–	19.9	26.9	–	18.8	25.7
1600 Cfm	EAT (wb)	58	TC	44.0	44.0	49.6	42.1	42.1	47.4	40.1	40.1	45.2	38.1	38.1	43.0
			SHC	38.3	44.0	49.6	36.7	42.1	47.4	34.9	40.1	45.2	33.2	38.1	43.0
		62	TC	45.7	45.7	48.6	43.5	43.5	47.5	41.0	41.0	46.0	38.5	38.5	44.4
			SHC	35.3	42.0	48.6	34.2	40.8	47.5	32.9	39.4	46.0	31.6	38.0	44.4
		67	TC	49.8	49.8	49.8	47.6	47.6	47.6	45.1	45.1	45.1	42.3	42.3	42.3
			SHC	28.4	35.0	41.6	27.6	34.2	40.9	26.5	33.2	39.9	25.4	32.1	38.7
		72	TC	53.0	53.0	53.0	51.1	51.1	51.1	48.6	48.6	48.6	45.4	45.4	45.4
			SHC	21.0	27.6	34.3	20.3	27.0	33.6	19.4	26.0	32.6	18.3	24.8	31.3
		76	TC	–	54.6	54.6	–	52.8	52.8	–	50.4	50.4	–	46.8	46.8
			SHC	–	22.0	29.9	–	21.3	29.0	–	20.3	27.9	–	19.2	26.6
1800 Cfm	EAT (wb)	58	TC	44.0	44.0	50.3	42.1	42.1	48.1	40.1	40.1	45.9	38.0	38.0	43.5
			SHC	37.6	44.0	50.3	36.0	42.1	48.1	34.3	40.1	45.9	32.6	38.0	43.5
		62	TC	45.7	45.7	49.5	43.5	43.5	48.3	41.0	41.0	46.8	38.4	38.4	45.2
			SHC	34.5	42.0	49.5	33.4	40.8	48.3	32.1	39.4	46.8	30.8	38.0	45.2
		67	TC	49.8	49.8	49.8	47.6	47.6	47.6	45.1	45.1	45.1	42.3	42.3	42.3
			SHC	27.6	35.0	42.5	26.8	34.2	41.7	25.7	33.2	40.7	24.6	32.1	39.5
		72	TC	53.0	53.0	53.0	51.1	51.1	51.1	48.6	48.6	48.6	45.4	45.4	45.4
			SHC	20.2	27.6	35.1	19.5	27.0	34.4	18.5	26.0	33.4	17.5	24.8	32.1
		76	TC	–	54.6	54.6	–	52.8	52.8	–	50.4	50.4	–	46.8	46.8
			SHC	–	22.0	30.9	–	21.3	30.0	–	20.3	28.9	–	19.2	27.5
2000 Cfm	EAT (wb)	58	TC	46.9	46.9	52.9	45.0	45.0	50.8	42.9	42.9	48.4	40.7	40.7	45.9
			SHC	40.9	46.9	52.9	39.3	45.0	50.8	37.4	42.9	48.4	35.5	40.7	45.9
		62	TC	47.5	47.5	54.0	45.3	45.3	52.5	43.0	43.0	50.3	40.7	40.7	47.7
			SHC	38.5	46.3	54.0	37.3	44.9	52.5	35.6	43.0	50.3	33.8	40.7	47.7
		67	TC	51.2	51.2	51.2	49.1	49.1	49.1	46.5	46.5	46.5	43.5	43.5	43.5
			SHC	30.5	38.3	46.0	29.8	37.6	45.5	28.7	36.6	44.5	27.5	35.4	43.2
		72	TC	54.0	54.0	54.0	52.1	52.1	52.1	49.7	49.7	49.7	46.2	46.2	46.2
			SHC	21.7	29.2	36.8	21.1	28.7	36.4	20.1	27.8	35.4	18.9	26.4	33.9
		76	TC	–	55.2	55.2	–	53.5	53.5	–	51.0	51.0	–	47.3	47.3
			SHC	–	22.7	31.4	–	22.0	30.6	–	21.1	29.6	–	19.9	28.1

LEGEND:

– – Do not operate
Cfm – Cubic feet per minute (supply air)
EAT(db) – Entering air temperature (dry bulb)
EAT(wb) – Entering air temperature (wet bulb)
SHC – Sensible heat capacity
TC – Total capacity

48TC05 (4 TONS) – UNIT WITH HUMIDI–MIZER SYSTEM IN SUBCOOLING MODE										
Air Entering Evaporator – CFM										
Temp (F) Air Ent Condenser (Edb)		80 dry bulb			80 dry bulb			80 dry bulb		
		72 wet bulb			67 wet bulb			62 wet bulb		
		1200	1600	2000	1200	1600	2000	1200	1600	2000
75	TC	52.5	55.9	58.6	47.1	50.2	52.7	41.7	44.5	46.8
	SHC	22.6	25.5	27.8	27.1	29.9	32.0	31.6	34.2	36.2
	kW	2.5	2.5	2.5	2.5	2.5	2.5	2.5	2.5	2.5
85	TC	48.7	52.2	54.9	43.4	46.5	49.0	38.0	40.8	43.1
	SHC	18.0	21.3	23.9	23.6	26.8	29.2	29.3	32.2	34.4
	kW	2.9	2.9	2.9	2.9	2.9	2.9	2.9	2.9	2.9
95	TC	44.9	48.4	51.2	39.6	42.8	45.3	34.3	37.1	39.4
	SHC	13.4	17.2	20.0	20.2	23.7	26.4	27.0	30.2	32.7
	kW	3.4	3.4	3.4	3.3	3.3	3.3	3.3	3.3	3.3
105	TC	41.1	44.7	47.5	35.9	39.1	41.7	30.6	33.5	35.8
	SHC	8.8	13.0	16.1	16.7	20.6	23.6	24.6	28.2	31.0
	kW	3.8	3.8	3.8	3.7	3.7	3.7	3.7	3.7	3.7
115	TC	37.4	41.0	43.9	32.1	35.4	38.0	26.8	29.8	32.1
	SHC	4.3	8.8	12.2	13.3	17.5	20.7	22.3	26.2	29.2
	kW	4.2	4.2	4.2	4.2	4.2	4.2	4.1	4.1	4.1

48TC05 (4 TONS) – UNIT WITH HUMIDI–MIZER SYSTEM IN HOT GAS REHEAT MODE										
Air Entering Evaporator – CFM										
Temp (F) Air Ent Condenser (Edb)		75 dry bulb			75 dry bulb			75 dry bulb		
		62.5 wet bulb (50% relative)			64 wet bulb (55% relative)			65.3 wet bulb (60% relative)		
		1200	1600	2000	1200	1600	2000	1200	1600	2000
80	TC	11.6	13.8	15.5	13.5	15.8	17.6	15.2	17.5	19.3
	SHC	–1.0	1.2	3.0	–3.1	–0.8	0.9	–4.8	–2.6	–0.9
	kW	2.5	2.5	2.5	2.5	2.5	2.5	2.5	2.5	2.5
75	TC	12.5	14.6	16.2	14.3	16.4	18.1	15.9	18.1	19.8
	SHC	–0.7	1.4	3.0	–2.7	–0.6	1.1	–4.3	–2.2	–0.6
	kW	2.5	2.5	2.5	2.5	2.5	2.5	2.5	2.5	2.5
70	TC	13.4	15.3	16.8	15.1	17.1	18.7	16.6	18.7	20.3
	SHC	–0.5	1.5	3.0	–2.3	–0.3	1.2	–3.8	–1.9	–0.3
	kW	2.5	2.5	2.5	2.5	2.5	2.5	2.5	2.5	2.5
60	TC	15.1	16.8	18.1	16.7	18.4	19.8	18.1	19.9	21.2
	SHC	0.0	1.7	3.1	–1.5	0.2	1.5	–2.8	–1.1	0.2
	kW	2.6	2.6	2.6	2.6	2.6	2.6	2.6	2.6	2.6
50	TC	16.9	18.3	19.4	18.3	19.8	20.9	19.6	21.0	22.2
	SHC	0.6	2.0	3.1	–0.7	0.7	1.8	–1.8	–0.4	0.7
	kW	2.6	2.6	2.6	2.6	2.6	2.6	2.6	2.6	2.6
40	TC	18.7	19.8	20.7	19.9	21.1	22.0	21.0	22.2	23.2
	SHC	1.1	2.2	3.1	0.1	1.2	2.1	–0.8	0.4	1.3
	kW	2.6	2.6	2.6	2.7	2.7	2.7	2.7	2.7	2.7

LEGEND

Edb – Entering Dry–Bulb
Ewb – Entering Wet–Bulb
kW – Compressor Motor Power Input
ldb – Leaving Dry–Bulb
lwb – Leaving Wet–Bulb
SHC – Sensible Heat Capacity (1000 Btuh) Gross
TC – Total Capacity (1000 Btuh) Gross

NOTES:

1. Direct interpolation is permissible. Do not extrapolate.
2. The following formulas may be used:

$$t_{ldb} = t_{edb} - \frac{\text{sensible capacity (Btuh)}}{1.10 \times \text{cfm}}$$

t_{lwb} = Wet–bulb temperature corresponding to enthalpy of air leaving evaporator coil (h_{lwb})

$$h_{lwb} = h_{ewb} - \frac{\text{total capacity (Btuh)}}{4.5 \times \text{cfm}}$$

Where: h_{ewb} = Enthalpy of air entering evaporator coil

Table 17 – COOLING CAPACITIES 1-STAGE COOLING 5 TONS

48TC*A06 (RTPF)				AMBIENT TEMPERATURE											
				85			95			105			115		
				EAT (db)			EAT (db)			EAT (db)			EAT (db)		
				75	80	85	75	80	85	75	80	85	75	80	85
1500 Cfm	EAT (wb)	58	TC	52.9	52.9	60.0	49.9	49.9	56.6	46.6	46.6	52.9	43.1	43.1	48.9
			SHC	45.8	52.9	60.0	43.2	49.9	56.6	40.4	46.6	52.9	37.3	43.1	48.9
		62	TC	56.2	56.2	57.6	52.2	52.2	55.7	47.8	47.8	53.5	43.2	43.2	51.0
			SHC	41.8	49.7	57.6	39.9	47.8	55.7	37.8	45.6	53.5	35.5	43.2	51.0
		67	TC	62.4	62.4	62.4	58.8	58.8	58.8	54.4	54.4	54.4	49.5	49.5	49.5
			SHC	34.8	42.8	50.7	33.2	41.2	49.1	31.4	39.3	47.3	29.4	37.3	45.3
		72	TC	68.2	68.2	68.2	64.8	64.8	64.8	60.8	60.8	60.8	56.2	56.2	56.2
			SHC	27.2	35.2	43.2	25.9	33.9	41.9	24.4	32.4	40.4	22.6	30.6	38.6
		76	TC	–	71.1	71.1	–	69.0	69.0	–	65.4	65.4	–	60.9	60.9
			SHC	–	28.4	36.6	–	27.6	35.9	–	26.3	34.6	–	24.8	33.0
1750 Cfm	EAT (wb)	58	TC	56.5	56.5	64.0	53.3	53.3	60.4	49.8	49.8	56.5	46.1	46.1	52.3
			SHC	48.9	56.5	64.0	46.1	53.3	60.4	43.1	49.8	56.5	39.9	46.1	52.3
		62	TC	58.5	58.5	63.4	54.4	54.4	61.3	49.9	49.9	58.9	46.1	46.1	54.4
			SHC	45.2	54.3	63.4	43.2	52.2	61.3	41.0	49.9	58.9	37.9	46.1	54.4
		67	TC	64.3	64.3	64.3	60.5	60.5	60.5	56.2	56.2	56.2	51.3	51.3	51.3
			SHC	36.9	46.1	55.2	35.3	44.5	53.7	33.6	42.8	51.9	31.6	40.8	49.9
		72	TC	69.5	69.5	69.5	66.5	66.5	66.5	62.4	62.4	62.4	57.7	57.7	57.7
			SHC	27.8	36.9	45.9	26.7	35.9	45.1	25.2	34.5	43.7	23.5	32.8	42.0
		76	TC	–	72.2	72.2	–	70.1	70.1	–	66.6	66.6	–	–	–
			SHC	–	29.3	38.9	–	28.6	38.2	–	27.4	36.8	–	–	–
2000 Cfm	EAT (wb)	58	TC	59.3	59.3	67.3	56.1	56.1	63.6	52.5	52.5	59.5	48.6	48.6	55.1
			SHC	51.4	59.3	67.3	48.6	56.1	63.6	45.4	52.5	59.5	42.1	48.6	55.1
		62	TC	60.1	60.1	68.5	56.2	56.2	66.3	52.5	52.5	62.0	48.7	48.7	57.4
			SHC	48.1	58.3	68.5	46.2	56.2	66.3	43.1	52.5	62.0	39.9	48.7	57.4
		67	TC	65.7	65.7	65.7	61.9	61.9	61.9	57.5	57.5	57.5	52.6	52.6	54.4
			SHC	38.8	49.1	59.5	37.3	47.7	58.1	35.6	46.0	56.4	33.6	44.0	54.4
		72	TC	70.1	70.1	70.1	67.6	67.6	67.6	63.6	63.6	63.6	58.9	58.9	58.9
			SHC	28.3	38.1	48.0	27.4	37.7	48.0	26.0	36.4	46.7	24.3	34.7	45.2
		76	TC	–	72.9	72.9	–	70.8	70.8	–	67.4	67.4	–	–	–
			SHC	–	30.1	40.7	–	29.3	39.9	–	28.2	38.7	–	–	–
2250 Cfm	EAT (wb)	58	TC	61.5	61.5	69.8	58.4	58.4	66.2	54.8	54.8	62.1	50.8	50.8	57.6
			SHC	53.2	61.5	69.8	50.5	58.4	66.2	47.4	54.8	62.1	43.9	50.8	57.6
		62	TC	61.6	61.6	72.6	58.4	58.4	68.9	54.8	54.8	64.6	50.8	50.8	59.9
			SHC	50.6	61.6	72.6	47.9	58.4	68.9	45.0	54.8	64.6	41.7	50.8	59.9
		67	TC	66.8	66.8	66.8	63.0	63.0	63.0	58.5	58.5	60.6	53.6	53.6	58.6
			SHC	40.5	52.0	63.4	39.1	50.7	62.3	37.4	49.0	60.6	35.5	47.0	58.6
		72	TC	70.8	70.8	70.8	68.5	68.5	68.5	64.5	64.5	64.5	59.8	59.8	59.8
			SHC	28.7	39.5	50.2	28.0	39.3	50.5	26.7	38.1	49.6	25.0	36.6	48.1
		76	TC	–	73.4	73.4	–	71.2	71.2	–	67.9	67.9	–	–	–
			SHC	–	30.7	42.1	–	30.0	41.4	–	28.9	40.4	–	–	–
2500 Cfm	EAT (wb)	58	TC	63.3	63.3	71.8	60.1	60.1	68.2	56.5	56.5	64.1	52.6	52.6	59.6
			SHC	54.8	63.3	71.8	52.1	60.1	68.2	49.0	56.5	64.1	45.5	52.6	59.6
		62	TC	63.4	63.4	74.7	60.2	60.2	71.0	56.6	56.6	66.7	52.6	52.6	62.1
			SHC	52.0	63.4	74.7	49.4	60.2	71.0	46.5	56.6	66.7	43.2	52.6	62.1
		67	TC	67.6	67.6	67.6	63.8	63.8	66.2	59.3	59.3	64.6	54.4	54.4	62.5
			SHC	42.1	54.6	67.1	40.9	53.5	66.2	39.2	51.9	64.6	37.2	49.8	62.5
		72	TC	71.3	71.3	71.3	69.0	69.0	69.0	65.1	65.1	65.1	60.4	60.4	60.4
			SHC	29.1	40.7	52.2	28.5	40.7	52.9	27.3	39.7	52.2	25.7	38.3	50.9
		76	TC	–	73.8	73.8	–	71.4	71.4	–	68.3	68.3	–	–	–
			SHC	–	31.2	43.3	–	30.5	42.6	–	29.6	41.9	–	–	–

LEGEND:

– – Do not operate
Cfm – Cubic feet per minute (supply air)
EAT(db) – Entering air temperature (dry bulb)
EAT(wb) – Entering air temperature (wet bulb)
SHC – Sensible heat capacity
TC – Total capacity

48TC06 (5 TONS) – UNIT WITH HUMIDI–MIZER SYSTEM IN SUBCOOLING MODE										
Air Entering Evaporator – CFM										
Temp (F) Air Ent Condenser (Edb)		80 dry bulb			80 dry bulb			80 dry bulb		
		72 wet bulb			67 wet bulb			62 wet bulb		
		1750	2000	2250	1750	2000	2250	1750	2000	2250
75	TC	73.1	78.7	84.5	63.2	66.9	70.8	53.2	55.1	57.1
	SHC	35.3	37.2	38.8	42.0	43.7	45.3	48.7	50.3	51.8
	kW	3.3	3.3	3.3	3.3	3.3	3.3	3.3	3.3	3.3
85	TC	67.6	71.2	75.0	59.1	61.2	63.3	50.6	51.1	51.5
	SHC	27.9	30.0	31.9	36.3	38.3	40.1	44.8	46.6	48.2
	kW	3.8	3.8	3.8	3.8	3.8	3.8	3.8	3.8	3.8
95	TC	62.1	63.8	65.5	55.1	55.4	55.8	48.0	47.0	46.0
	SHC	20.5	22.9	24.9	30.7	32.9	34.8	40.9	42.9	44.7
	kW	4.3	4.3	4.3	4.3	4.3	4.3	4.3	4.3	4.3
105	TC	56.6	56.3	56.0	51.0	49.6	48.3	45.4	43.0	40.5
	SHC	13.1	15.7	18.0	25.0	27.5	29.6	36.9	39.2	41.2
	kW	4.8	4.8	4.8	4.8	4.8	4.8	4.7	4.7	4.7
115	TC	51.1	48.8	46.5	46.9	43.9	40.7	42.8	39.0	35.0
	SHC	5.8	8.6	11.0	19.4	22.0	24.4	33.0	35.5	37.7
	kW	5.3	5.3	5.3	5.3	5.3	5.3	5.2	5.2	5.2

48TC06 (5 TONS) – UNIT WITH HUMIDI–MIZER SYSTEM IN HOT GAS REHEAT MODE										
Air Entering Evaporator – CFM										
Temp (F) Air Ent Condenser (Edb)		75 dry bulb			75 dry bulb			75 dry bulb		
		62.5 wet bulb (50% relative)			64 wet bulb (55% relative)			65.3 wet bulb (60% relative)		
		1750	2000	2250	1750	2000	2250	1750	2000	2250
80	TC	23.0	24.4	25.6	24.7	26.2	27.4	26.3	27.7	29.0
	SHC	5.3	6.1	6.8	3.2	4.0	4.7	1.4	2.2	2.9
	kW	2.9	2.9	2.9	2.9	2.9	2.9	2.9	2.9	2.9
75	TC	23.3	24.6	25.7	25.0	26.3	27.5	26.4	27.8	29.0
	SHC	5.1	5.8	6.5	3.1	3.9	4.5	1.4	2.2	2.8
	kW	2.9	2.9	2.9	2.9	2.9	2.9	2.9	2.9	2.9
70	TC	23.5	24.8	25.9	25.2	26.4	27.5	26.6	27.9	29.0
	SHC	4.8	5.5	6.2	3.0	3.7	4.3	1.4	2.1	2.8
	kW	3.0	3.0	3.0	3.0	3.0	3.0	3.0	3.0	3.0
60	TC	24.1	25.2	26.1	25.6	26.7	27.7	26.9	28.0	29.0
	SHC	4.3	5.0	5.5	2.8	3.4	3.9	1.4	2.0	2.6
	kW	3.0	3.0	3.0	3.0	3.0	3.0	3.0	3.0	3.0
50	TC	24.7	25.6	26.4	26.1	27.0	27.8	27.2	28.2	29.0
	SHC	3.8	4.4	4.8	2.5	3.1	3.5	1.4	2.0	2.4
	kW	3.1	3.1	3.1	3.1	3.1	3.1	3.1	3.1	3.1
40	TC	25.3	26.0	26.7	26.5	27.3	27.9	27.6	28.3	29.0
	SHC	3.3	3.8	4.2	2.3	2.8	3.1	1.4	1.9	2.3
	kW	3.1	3.1	3.1	3.2	3.2	3.2	3.2	3.2	3.2

LEGEND

Edb – Entering Dry–Bulb
Ewb – Entering Wet–Bulb
kW – Compressor Motor Power Input
ldb – Leaving Dry–Bulb
lwb – Leaving Wet–Bulb
SHC – Sensible Heat Capacity (1000 Btuh) Gross
TC – Total Capacity (1000 Btuh) Gross

NOTES:

1. Direct interpolation is permissible. Do not extrapolate.
2. The following formulas may be used:

$$t_{ldb} = t_{edb} - \frac{\text{sensible capacity (Btuh)}}{1.10 \times \text{cfm}}$$

t_{lwb} = Wet–bulb temperature corresponding to enthalpy of air leaving evaporator coil (h_{lwb})

$$h_{lwb} = h_{ewb} - \frac{\text{total capacity (Btuh)}}{4.5 \times \text{cfm}}$$

Where: h_{ewb} = Enthalpy of air entering evaporator coil

Table 19 – COOLING CAPACITIES 1-STAGE COOLING 6 TONS

48TC*A07 (RTPF)				AMBIENT TEMPERATURE											
				85			95			105			115		
				EAT (db)			EAT (db)			EAT (db)			EAT (db)		
				75	80	85	75	80	85	75	80	85	75	80	85
1800 Cfm	EAT (wb)	58	TC	64.9	64.9	73.3	62.1	62.1	70.0	58.9	58.9	66.4	55.6	55.6	62.7
			SHC	56.6	64.9	73.3	54.1	62.1	70.0	51.4	58.9	66.4	48.5	55.6	62.7
		62	TC	68.7	68.7	70.3	64.9	64.9	68.5	60.8	60.8	66.4	56.4	56.4	64.0
			SHC	51.7	61.0	70.3	49.9	59.2	68.5	47.9	57.2	66.4	45.7	54.9	64.0
		67	TC	75.6	75.6	75.6	71.7	71.7	71.7	67.4	67.4	67.4	62.5	62.5	62.5
			SHC	42.8	52.2	61.5	41.2	50.5	59.8	39.3	48.6	58.0	37.2	46.5	55.8
		72	TC	82.6	82.6	82.6	78.5	78.5	78.5	73.7	73.7	73.7	67.8	67.8	67.8
			SHC	33.5	42.8	52.2	31.9	41.3	50.6	30.0	39.3	48.6	27.8	36.9	45.9
		76	TC	–	87.5	87.5	–	83.3	83.3	–	77.7	77.7	–	70.9	70.9
			SHC	–	35.0	44.9	–	33.5	43.4	–	31.6	41.5	–	29.3	39.1
2100 Cfm	EAT (wb)	58	TC	68.9	68.9	77.7	65.9	65.9	74.3	62.5	62.5	70.5	58.7	58.7	66.2
			SHC	60.1	68.9	77.7	57.4	65.9	74.3	54.5	62.5	70.5	51.2	58.7	66.2
		62	TC	70.9	70.9	76.9	67.1	67.1	75.0	63.0	63.0	72.5	58.7	58.7	68.7
			SHC	55.6	66.3	76.9	53.8	64.4	75.0	51.6	62.1	72.5	48.7	58.7	68.7
		67	TC	77.8	77.8	77.8	73.7	73.7	73.7	69.2	69.2	69.2	64.0	64.0	64.0
			SHC	45.4	56.1	66.8	43.7	54.4	65.2	41.8	52.5	63.2	39.6	50.2	60.7
		72	TC	84.5	84.5	84.5	80.3	80.3	80.3	75.1	75.1	75.1	68.8	68.8	68.8
			SHC	34.5	45.2	55.9	32.9	43.5	54.2	30.9	41.4	52.0	28.5	38.7	48.9
		76	TC	–	89.2	89.2	–	84.7	84.7	–	78.8	78.8	–	71.6	71.6
			SHC	–	36.3	47.8	–	34.7	46.0	–	32.6	43.7	–	30.1	40.9
2400 Cfm	EAT (wb)	58	TC	72.0	72.0	81.2	68.7	68.7	77.5	65.2	65.2	73.5	61.1	61.1	68.9
			SHC	62.8	72.0	81.2	60.0	68.7	77.5	56.9	65.2	73.5	53.3	61.1	68.9
		62	TC	72.8	72.8	82.8	68.9	68.9	80.7	65.2	65.2	76.4	61.2	61.2	71.6
			SHC	59.1	71.0	82.8	57.2	68.9	80.7	54.1	65.2	76.4	50.7	61.2	71.6
		67	TC	79.4	79.4	79.4	75.2	75.2	75.2	70.5	70.5	70.5	65.1	65.1	65.3
			SHC	47.7	59.8	71.8	46.0	58.1	70.2	44.0	56.0	68.1	41.6	53.5	65.3
		72	TC	86.0	86.0	86.0	81.6	81.6	81.6	76.1	76.1	76.1	69.6	69.6	69.6
			SHC	35.3	47.2	59.2	33.7	45.6	57.5	31.7	43.3	55.0	29.1	40.3	51.4
		76	TC	–	90.3	90.3	–	85.7	85.7	–	79.6	79.6	–	72.1	72.1
			SHC	–	37.3	49.8	–	35.6	48.0	–	33.5	45.6	–	30.8	42.5
2700 Cfm	EAT (wb)	58	TC	60.3	60.3	74.1	71.1	71.1	80.2	67.4	67.4	76.0	63.0	63.0	71.1
			SHC	46.4	60.3	74.1	62.0	71.1	80.2	58.8	67.4	76.0	55.0	63.0	71.1
		62	TC	65.4	65.4	69.3	71.2	71.2	83.3	67.5	67.5	79.0	63.1	63.1	73.8
			SHC	41.0	55.1	69.3	59.0	71.2	83.3	55.9	67.5	79.0	52.3	63.1	73.8
		67	TC	72.7	72.7	72.7	76.3	76.3	76.3	71.5	71.5	72.6	65.8	65.8	69.4
			SHC	33.8	48.0	62.2	48.2	61.6	74.9	46.1	59.3	72.6	43.5	56.5	69.4
		72	TC	79.7	79.7	79.7	82.5	82.5	82.5	76.9	76.9	76.9	70.1	70.1	70.1
			SHC	25.8	40.2	54.6	34.5	47.5	60.5	32.3	45.0	57.7	29.7	41.7	53.8
		76	TC	–	85.1	85.1	–	86.4	86.4	–	80.2	80.2	–	72.5	72.5
			SHC	–	33.5	48.4	–	36.5	49.9	–	34.3	47.3	–	31.5	44.0
3000 Cfm	EAT (wb)	58	TC	64.9	64.9	78.8	73.1	73.1	82.5	69.2	69.2	78.0	64.5	64.5	72.7
			SHC	51.1	64.9	78.8	63.8	73.1	82.5	60.3	69.2	78.0	56.2	64.5	72.7
		62	TC	68.7	68.7	76.5	73.2	73.2	85.7	69.2	69.2	81.0	64.5	64.5	75.5
			SHC	45.5	61.0	76.5	60.7	73.2	85.7	57.4	69.2	81.0	53.5	64.5	75.5
		67	TC	75.6	75.6	75.6	77.2	77.2	79.4	72.2	72.2	76.8	66.3	66.3	73.0
			SHC	36.6	52.2	67.7	50.2	64.8	79.4	48.0	62.4	76.8	45.1	59.1	73.0
		72	TC	82.6	82.6	82.6	83.3	83.3	83.3	77.5	77.5	77.5	70.5	70.5	70.5
			SHC	27.2	42.8	58.5	35.1	49.2	63.3	32.9	46.6	60.3	30.2	43.0	55.9
		76	TC	–	87.5	87.5	–	86.9	86.9	–	80.6	80.6	–	72.8	72.8
			SHC	–	35.0	51.5	–	37.3	51.6	–	35.0	48.9	–	32.1	45.3

LEGEND:

– – Do not operate in this region
Cfm – Cubic feet per minute (supply air)
EAT(db) – Entering air temperature (dry bulb)
EAT(wb) – Entering air temperature (wet bulb)
SHC – Sensible heat capacity
TC – Total capacity

48TC07 (6 TONS) – UNIT WITH HUMIDI–MIZER SYSTEM IN SUBCOOLING MODE										
Air Entering Evaporator – CFM										
Temp (F) Air Ent Condenser (Edb)		80 dry bulb			80 dry bulb			80 dry bulb		
		72 wet bulb			67 wet bulb			62 wet bulb		
		2100	2400	2700	2100	2400	2700	2100	2400	2700
75	TC	86.7	89.9	92.8	79.3	82.3	84.9	71.9	74.6	77.0
	SHC	40.1	41.8	43.3	46.9	48.5	49.9	53.7	55.2	56.5
	kW	4.3	4.3	4.3	4.2	4.2	4.2	4.2	4.2	4.2
85	TC	79.5	82.6	85.4	72.5	75.3	77.9	65.4	68.0	70.3
	SHC	32.1	34.0	35.7	40.7	42.5	44.1	49.4	51.0	52.5
	kW	5.0	5.0	5.0	5.0	5.0	5.0	4.9	4.9	4.9
95	TC	72.4	75.3	78.1	65.6	68.3	70.8	58.8	61.3	63.6
	SHC	24.1	26.3	28.1	34.6	36.6	38.3	45.1	46.9	48.5
	kW	5.8	5.8	5.8	5.7	5.7	5.7	5.6	5.6	5.6
105	TC	65.2	68.1	70.7	58.7	61.4	63.8	52.3	54.7	56.8
	SHC	16.2	18.5	20.5	28.5	30.6	32.6	40.7	42.8	44.6
	kW	6.5	6.5	6.5	6.4	6.4	6.4	6.3	6.3	6.3
115	TC	58.0	60.8	63.3	51.9	54.4	56.7	45.7	48.0	50.1
	SHC	8.2	10.7	13.0	22.3	24.7	26.8	36.4	38.6	40.6
	kW	7.2	7.2	7.2	7.1	7.1	7.1	7.0	7.0	7.0

48TC07 (6 TONS) – UNIT WITH HUMIDI–MIZER SYSTEM IN HOT GAS REHEAT MODE										
Air Entering Evaporator – CFM										
Temp (F) Air Ent Condenser (Edb)		75 dry bulb			75 dry bulb			75 dry bulb		
		62.5 wet bulb (50% relative)			64 wet bulb (55% relative)			65.3 wet bulb (60% relative)		
		2100	2400	2700	2100	2400	2700	1750	2000	2700
80	TC	16.7	19.8	22.5	18.8	21.9	24.7	16.2	19.4	26.7
	SHC	0.6	0.6	0.6	–0.4	–0.4	–0.4	–1.3	–1.3	–1.3
	kW	4.0	4.0	4.0	4.0	4.0	4.0	4.0	4.0	4.0
75	TC	17.7	20.6	23.1	19.6	22.6	25.3	17.3	20.3	27.1
	SHC	0.6	0.6	0.6	–0.3	–0.3	–0.3	–1.2	–1.2	–1.2
	kW	4.0	4.0	4.0	4.0	4.0	4.0	4.0	4.0	4.0
70	TC	18.6	21.3	23.7	20.5	23.3	25.8	18.3	21.1	27.6
	SHC	0.7	0.7	0.7	–0.2	–0.2	–0.2	–1.0	–1.0	–1.0
	kW	4.0	4.0	4.0	4.1	4.1	4.1	4.1	4.1	4.1
60	TC	20.5	22.9	25.0	22.2	24.7	26.8	20.4	22.8	28.5
	SHC	0.7	0.7	0.7	–0.0	–0.0	–0.0	–0.7	–0.7	–0.7
	kW	4.1	4.1	4.1	4.1	4.1	4.1	4.1	4.1	4.1
50	TC	22.4	24.4	26.2	24.0	26.0	27.9	22.4	24.5	29.3
	SHC	0.8	0.8	0.8	0.1	0.1	0.1	–0.4	–0.4	–0.4
	kW	4.1	4.1	4.1	4.1	4.1	4.1	4.2	4.2	4.2
40	TC	24.3	25.9	27.4	25.7	27.4	28.9	24.5	26.3	30.2
	SHC	0.8	0.8	0.8	0.3	0.3	0.3	–0.1	–0.1	–0.1
	kW	4.1	4.1	4.1	4.2	4.2	4.2	4.2	4.2	4.2

LEGEND

Edb – Entering Dry–Bulb
Ewb – Entering Wet–Bulb
kW – Compressor Motor Power Input
ldb – Leaving Dry–Bulb
lwb – Leaving Wet–Bulb
SHC – Sensible Heat Capacity (1000 Btuh) Gross
TC – Total Capacity (1000 Btuh) Gross

NOTES:

1. Direct interpolation is permissible. Do not extrapolate.
2. The following formulas may be used:

$$t_{ldb} = t_{edb} - \frac{\text{sensible capacity (Btuh)}}{1.10 \times \text{cfm}}$$

t_{lwb} = Wet–bulb temperature corresponding to enthalpy of air leaving evaporator coil (h_{lwb})

$$h_{lwb} = h_{ewb} - \frac{\text{total capacity (Btuh)}}{4.5 \times \text{cfm}}$$

Where: h_{ewb} = Enthalpy of air entering evaporator coil

Table 21 – COOLING CAPACITIES 1-STAGE COOLING 7.5 TONS

48TC*A08 (RTPF)				AMBIENT TEMPERATURE											
				85			95			105			115		
				EAT (db)			EAT (db)			EAT (db)			EA (db)		
				75	80	85	75	80	85	75	80	85	75	80	85
2250 Cfm	EAT (wb)	58	TC	81.2	81.2	91.8	77.5	77.5	87.7	73.6	73.6	83.3	69.5	69.5	78.7
			SHC	70.5	81.2	91.8	67.3	77.5	87.7	63.9	73.6	83.3	60.4	69.5	78.7
		62	TC	86.9	86.9	86.9	82.3	82.3	84.0	77.2	77.2	81.5	71.9	71.9	78.8
			SHC	63.6	74.9	86.2	61.4	72.7	84.0	58.9	70.2	81.5	56.3	67.6	78.8
		67	TC	95.2	95.2	95.2	90.7	90.7	90.7	85.7	85.7	85.7	79.9	79.9	79.9
			SHC	52.8	64.2	75.6	50.9	62.2	73.6	48.8	60.1	71.5	46.3	57.6	68.9
		72	TC	103.5	103.5	103.5	98.9	98.9	98.9	93.8	93.8	93.8	87.3	87.3	87.3
			SHC	41.5	53.1	64.6	39.7	51.2	62.7	37.7	49.2	60.6	35.3	46.6	57.8
		76	TC	–	109.6	109.6	–	104.8	104.8	–	99.1	99.1	–	91.6	91.6
			SHC	–	43.7	56.0	–	42.0	54.3	–	40.0	52.4	–	37.4	49.8
2625 Cfm	EAT (wb)	58	TC	85.9	85.9	97.2	82.2	82.2	93.1	78.1	78.1	88.4	73.9	73.9	83.6
			SHC	74.6	85.9	97.2	71.4	82.2	93.1	67.9	78.1	88.4	64.1	73.9	83.6
		62	TC	89.6	89.6	94.1	85.1	85.1	91.7	80.1	80.1	89.1	74.6	74.6	86.0
			SHC	68.1	81.1	94.1	65.9	78.8	91.7	63.4	76.3	89.1	60.6	73.3	86.0
		67	TC	97.9	97.9	97.9	93.2	93.2	93.2	88.1	88.1	88.1	82.0	82.0	82.0
			SHC	55.7	68.7	81.7	53.7	66.7	79.8	51.6	64.6	77.6	49.0	62.0	74.9
		72	TC	106.0	106.0	106.0	101.3	101.3	101.3	95.9	95.9	95.9	89.0	89.0	89.0
			SHC	42.7	55.8	68.9	40.9	53.9	67.0	38.8	51.8	64.7	36.2	48.9	61.7
		76	TC	–	111.8	111.8	–	106.9	106.9	–	100.7	100.7	–	92.7	92.7
			SHC	–	45.3	59.8	–	43.6	58.0	–	41.4	55.6	–	38.7	52.6
3000 Cfm	EAT (wb)	58	TC	89.6	89.6	101.4	85.9	85.9	97.2	81.7	81.7	92.5	77.0	77.0	87.1
			SHC	77.9	89.6	101.4	74.6	85.9	97.2	71.0	81.7	92.5	66.9	77.0	87.1
		62	TC	91.8	91.8	101.1	87.2	87.2	98.6	82.3	82.3	95.5	77.1	77.1	90.6
			SHC	72.2	86.7	101.1	69.9	84.3	98.6	67.2	81.3	95.5	63.5	77.1	90.6
		67	TC	99.9	99.9	99.9	95.2	95.2	95.2	89.9	89.9	89.9	83.6	83.6	83.6
			SHC	58.3	72.9	87.5	56.4	71.0	85.5	54.2	68.8	83.4	51.6	66.1	80.5
		72	TC	107.9	107.9	107.9	103.0	103.0	103.0	97.3	97.3	97.3	90.1	90.1	90.1
			SHC	43.7	58.3	72.8	41.9	56.4	70.9	39.7	54.1	68.4	37.0	51.0	65.0
		76	TC	–	113.8	113.8	–	108.4	108.4	–	102.0	102.0	–	93.4	93.4
			SHC	–	46.7	62.5	–	44.8	60.4	–	42.6	57.9	–	39.6	54.7
3375 Cfm	EAT (wb)	58	TC	92.7	92.7	104.9	88.8	88.8	100.5	84.6	84.6	95.7	79.6	79.6	90.0
			SHC	80.5	92.7	104.9	77.1	88.8	100.5	73.4	84.6	95.7	69.1	79.6	90.0
		62	TC	93.7	93.7	107.3	89.1	89.1	104.7	84.6	84.6	99.5	79.6	79.6	93.6
			SHC	75.8	91.6	107.3	73.5	89.1	104.7	69.8	84.6	99.5	65.6	79.6	93.6
		67	TC	101.5	101.5	101.5	96.7	96.7	96.7	91.3	91.3	91.3	84.8	84.8	85.7
			SHC	60.8	76.9	93.0	58.8	74.9	91.0	56.7	72.8	88.9	53.9	69.8	85.7
		72	TC	109.4	109.4	109.4	104.3	104.3	104.3	98.4	98.4	98.4	90.9	90.9	90.9
			SHC	44.6	60.5	76.4	42.8	58.6	74.4	40.5	56.2	71.8	37.7	52.8	68.0
		76	TC	–	115.1	115.1	–	109.5	109.5	–	102.8	102.8	–	94.0	94.0
			SHC	–	47.8	64.9	–	45.9	62.7	–	43.5	60.1	–	40.4	56.5
3750 Cfm	EAT (wb)	58	TC	95.3	95.3	107.8	91.3	91.3	103.3	86.9	86.9	98.3	81.7	81.7	92.4
			SHC	82.7	95.3	107.8	79.3	91.3	103.3	75.5	86.9	98.3	70.9	81.7	92.4
		62	TC	95.5	95.5	112.2	91.3	91.3	107.4	87.0	87.0	102.2	81.7	81.7	96.0
			SHC	78.7	95.5	112.2	75.3	91.3	107.4	71.7	87.0	102.2	67.4	81.7	96.0
		67	TC	102.8	102.8	102.8	97.9	97.9	97.9	92.3	92.3	94.0	85.7	85.7	90.5
			SHC	63.1	80.6	98.2	61.2	78.7	96.3	59.0	76.5	94.0	56.0	73.2	90.5
		72	TC	110.6	110.6	110.6	105.4	105.4	105.4	99.2	99.2	99.2	91.5	91.5	91.5
			SHC	45.5	62.7	79.9	43.5	60.7	77.8	41.3	58.1	75.0	38.3	54.5	70.7
		76	TC	–	116.1	116.1	–	110.3	110.3	–	103.5	103.5	–	94.5	94.5
			SHC	–	48.9	67.0	–	46.8	64.8	–	44.4	62.0	–	41.1	58.1

LEGEND:

– – Do not operate in this region
Cfm – Cubic feet per minute (supply air)
EAT(db) – Entering air temperature (dry bulb)
EAT(wb) – Entering air temperature (wet bulb)
SHC – Sensible heat capacity
TC – Total capacity

Table 22 – COOLING CAPACITIES 2-STAGE COOLING 7.5 TONS

48TC*D08 (RTPF & Novation)				AMBIENT TEMPERATURE											
				85			95			105			115		
				EAT (db)			EAT (db)			EAT (db)			EA (db)		
				75	80	85	75	80	85	75	80	85	75	80	85
2250 Cfm	EAT (wb)	58	TC	77.4	77.4	87.8	73.8	73.8	83.8	70.1	70.1	79.5	66.0	66.0	74.9
			SHC	66.9	77.4	87.8	63.9	73.8	83.8	60.6	70.1	79.5	57.1	66.0	74.9
		62	TC	82.2	82.2	83.9	77.5	77.5	81.7	72.6	72.6	79.2	67.3	67.3	76.4
			SHC	60.8	72.4	83.9	58.6	70.1	81.7	56.3	67.7	79.2	53.6	65.0	76.4
		67	TC	90.1	90.1	90.1	86.0	86.0	86.0	81.4	81.4	81.4	75.9	75.9	75.9
			SHC	50.2	61.8	73.3	48.5	60.1	71.6	46.5	58.1	69.7	44.2	55.8	67.4
		72	TC	98.0	98.0	98.0	94.0	94.0	94.0	89.5	89.5	89.5	84.3	84.3	84.3
			SHC	39.1	50.7	62.4	37.5	49.2	60.9	35.8	47.5	59.2	33.8	45.5	57.2
		76	TC	–	104.3	104.3	–	100.4	100.4	–	95.9	95.9	–	90.7	90.7
			SHC	–	41.7	54.0	–	40.3	52.7	–	38.7	51.0	–	36.8	49.0
2625 Cfm	EAT (wb)	58	TC	82.1	82.1	93.2	78.4	78.4	89.0	74.4	74.4	84.4	70.0	70.0	79.5
			SHC	71.0	82.1	93.2	67.8	78.4	89.0	64.3	74.4	84.4	60.6	70.0	79.5
		62	TC	84.9	84.9	91.8	80.4	80.4	89.5	75.4	75.4	86.7	70.2	70.2	82.9
			SHC	65.4	78.6	91.8	63.2	76.3	89.5	60.6	73.7	86.7	57.6	70.2	82.9
		67	TC	92.5	92.5	92.5	88.3	88.3	88.3	83.6	83.6	83.6	78.3	78.3	78.3
			SHC	53.0	66.3	79.5	51.3	64.6	78.0	49.4	62.8	76.1	47.2	60.6	73.9
		72	TC	100.4	100.4	100.4	96.4	96.4	96.4	91.7	91.7	91.7	86.4	86.4	86.4
			SHC	40.2	53.5	66.7	38.7	52.0	65.3	36.9	50.3	63.7	35.0	48.4	61.8
		76	TC	–	106.5	106.5	–	102.6	102.6	–	98.0	98.0	–	92.7	92.7
			SHC	–	43.3	57.6	–	41.8	55.9	–	40.2	54.1	–	38.4	52.2
3000 Cfm	EAT (wb)	58	TC	85.7	85.7	97.3	82.2	82.2	93.3	78.0	78.0	88.6	73.5	73.5	83.4
			SHC	74.1	85.7	97.3	71.1	82.2	93.3	67.5	78.0	88.6	63.6	73.5	83.4
		62	TC	86.9	86.9	98.7	82.8	82.8	96.4	78.2	78.2	92.3	73.6	73.6	86.9
			SHC	69.3	84.0	98.7	67.2	81.8	96.4	64.1	78.2	92.3	60.3	73.6	86.9
		67	TC	94.3	94.3	94.3	90.1	90.1	90.1	85.2	85.2	85.2	79.8	79.8	80.1
			SHC	55.6	70.5	85.4	54.0	68.9	83.9	52.1	67.1	82.2	49.9	65.0	80.1
		72	TC	102.2	102.2	102.2	98.1	98.1	98.1	93.3	93.3	93.3	87.9	87.9	87.9
			SHC	41.2	56.0	70.7	39.7	54.6	69.5	38.0	53.0	68.0	36.0	51.1	66.2
		76	TC	–	108.1	108.1	–	104.2	104.2	–	99.5	99.5	–	94.2	94.2
			SHC	–	44.5	60.2	–	43.2	58.7	–	41.6	57.0	–	39.8	55.2
3375 Cfm	EAT (wb)	58	TC	88.5	88.5	100.4	85.0	85.0	96.4	81.0	81.0	92	76.5	76.5	86.8
			SHC	76.5	88.5	100.4	73.5	85.0	96.4	70.1	81.0	92	66.1	76.5	86.8
		62	TC	88.9	88.9	103.9	85.1	85.1	100.4	81.1	81.1	95.7	76.5	76.5	90.3
			SHC	72.3	88.1	103.9	69.7	85.1	100.4	66.5	81.1	95.7	62.7	76.5	90.3
		67	TC	95.8	95.8	95.8	91.5	91.5	91.5	86.6	86.6	87.9	81.1	81.1	85.8
			SHC	58.0	74.4	90.9	56.4	73.0	89.6	54.6	71.3	87.9	52.4	69.1	85.8
		72	TC	103.6	103.6	103.6	99.4	99.4	99.4	94.6	94.6	94.6	89.1	89.1	89.1
			SHC	42.0	58.3	74.5	40.6	57.0	73.4	38.9	55.5	72.0	37.0	53.7	70.3
		76	TC	–	109.2	109.2	–	105.4	105.4	–	100.7	100.7	–	95.3	95.3
			SHC	–	45.6	62.6	–	44.4	61.3	–	42.8	59.7	–	41.0	58.0
3750 Cfm	EAT (wb)	58	TC	90.8	90.8	103.0	87.3	87.3	99.1	83.3	83.3	94.5	78.8	78.8	89.4
			SHC	78.5	90.8	103.0	75.5	87.3	99.1	72.0	83.3	94.5	68.2	78.8	89.4
		62	TC	90.9	90.9	107.2	87.4	87.4	103.1	83.3	83.3	98.4	78.9	78.9	93.1
			SHC	74.5	90.9	107.2	71.6	87.4	103.1	68.3	83.3	98.4	64.7	78.9	93.1
		67	TC	97.0	97.0	97.0	92.6	92.6	95.1	87.6	87.6	93.4	82.1	82.1	91.2
			SHC	60.3	78.2	96.2	58.8	76.9	95.1	56.9	75.2	93.4	54.8	73.0	91.2
		72	TC	104.7	104.7	104.7	100.5	100.5	100.5	95.6	95.6	95.6	90.1	90.1	90.1
			SHC	42.9	60.5	78.1	41.4	59.3	77.1	39.8	57.8	75.9	37.9	56.1	74.3
		76	TC	–	110.2	110.2	–	106.2	106.2	–	101.6	101.6	–	96.1	96.1
			SHC	–	46.7	64.8	–	45.4	63.6	–	44.0	62.3	–	42.2	60.6

* See Minimum–Maximum Airflow Ratings in Table 6. Do not operate outside these limits.

LEGEND:

– – Do not operate in this region
Cfm – Cubic feet per minute (supply air)
EAT(db) – Entering air temperature (dry bulb)
EAT(wb) – Entering air temperature (wet bulb)
SHC – Sensible heat capacity
TC – Total capacity

48TC08 COOLING CAPACITIES, UNIT WITH HUMIDI–MIZER SYSTEM IN SUBCOOLING MODE										
TEMP (F) AIR ENT CONDENSER (Edb)		AIR ENTERING EVAPORATOR – CFM								
		2250/0.05			3000/0.07			3750/0.09		
		Air Entering Evaporator – Ewb (F)								
		72	67	62	72	67	62	72	67	62
75	TC	103.05	93.02	83.60	109.77	99.52	90.08	114.01	103.69	95.19
	SHC	43.66	55.34	67.09	50.99	66.29	81.31	57.49	76.27	92.20
	kW	4.90	4.83	4.77	4.82	4.88	4.96	4.99	4.91	4.85
85	TC	95.39	85.83	76.88	101.59	91.89	82.95	105.53	95.76	87.77
	SHC	36.42	48.47	60.60	43.24	58.99	74.40	49.44	68.68	84.90
	kW	5.49	5.42	5.36	5.40	5.47	5.54	5.58	5.50	5.44
95	TC	87.48	78.44	69.97	93.21	84.05	75.61	96.84	87.63	80.14
	SHC	28.98	41.46	53.97	35.32	51.53	67.34	41.21	60.92	77.41
	kW	6.16	6.09	6.03	6.08	6.14	6.21	6.24	6.17	6.11
105	TC	79.35	70.83	62.84	84.57	75.96	68.04	87.88	79.23	72.26
	SHC	21.34	34.26	47.18	27.17	43.86	60.08	32.73	52.95	69.70
	kW	6.93	6.86	6.81	6.85	6.91	6.97	7.00	6.93	6.88
115	TC	70.87	62.89	55.42	75.58	67.54	60.15	78.56	70.51	64.06
	SHC	13.40	26.79	40.14	18.70	35.89	52.54	23.94	44.68	61.67
	kW	7.79	7.74	7.69	7.73	7.78	7.83	7.86	7.80	7.76

48TC08 COOLING CAPACITIES, UNIT WITH HUMIDI–MIZER SYSTEM IN HOT GAS REHEAT MODE										
TEMP (F) AIR ENT CONDENSER (Edb)		AIR ENTERING EVAPORATOR – Ewb (F)								
		75 Dry Bulb 62.5 Wet Bulb (50% Relative)			75 Dry Bulb 64 Wet Bulb (56% Relative)			75 Dry Bulb 65.3 Wet Bulb (60% Relative)		
		Air Entering Evaporator – Cfm								
		2250	3000	3750	2250	3000	3750	2250	3000	3750
80	TC	27.60	32.75	30.19	40.09	39.43	37.73	45.06	45.25	44.25
	SHC	–3.12	5.20	6.71	3.75	5.24	6.75	3.77	5.26	6.78
	kW	4.56	4.51	4.46	4.63	4.60	4.56	4.70	4.67	4.64
75	TC	35.40	33.78	31.20	41.14	40.51	38.80	46.15	46.37	45.38
	SHC	4.67	6.17	7.69	4.71	6.21	7.73	4.74	6.24	7.76
	kW	4.41	4.36	4.39	4.41	4.36	4.36	4.41	4.39	4.36
70	TC	36.36	34.71	32.18	42.10	41.47	39.77	47.08	47.31	46.32
	SHC	5.63	7.14	8.66	5.67	7.18	8.71	5.70	7.21	8.74
	kW	4.43	4.49	4.41	4.44	4.40	4.39	4.49	4.47	4.44
60	TC	38.25	36.64	34.15	43.97	43.37	41.72	48.98	49.22	48.26
	SHC	7.56	9.09	10.62	7.60	9.13	10.66	7.62	9.15	10.69
	kW	4.56	4.55	4.43	4.57	4.53	4.46	4.56	4.55	4.50
50	TC	40.15	38.60	36.14	45.95	45.37	43.73	50.57	50.97	49.56
	SHC	9.48	11.03	12.58	9.52	11.07	12.62	9.54	11.10	12.64
	kW	4.63	4.52	4.38	4.45	4.41	4.33	5.25	4.91	5.60
40	TC	42.18	40.62	38.11	47.80	47.25	45.43	52.65	52.75	51.83
	SHC	11.41	12.98	14.54	11.45	13.02	14.58	11.47	13.04	14.60
	kW	4.32	4.37	4.37	4.65	4.60	4.89	4.96	5.20	5.12

LEGEND

Edb – Entering Dry–Bulb
Ewb – Entering Wet–Bulb
kW – Compressor Motor Power Input
ldb – Leaving Dry–Bulb
lwb – Leaving Wet–Bulb
SHC – Sensible Heat Capacity (1000 Btuh) Gross
TC – Total Capacity (1000 Btuh) Gross

NOTES:

1. Direct interpolation is permissible. Do not extrapolate.
2. The following formulas may be used:

$$t_{ldb} = t_{edb} - \frac{\text{sensible capacity (Btuh)}}{1.10 \times \text{cfm}}$$

t_{lwb} = Wet–bulb temperature corresponding to enthalpy of air leaving evaporator coil (h_{lwb})

$$h_{lwb} = h_{ewb} - \frac{\text{total capacity (Btuh)}}{4.5 \times \text{cfm}}$$

Where: h_{ewb} = Enthalpy of air entering evaporator coil

Table 24 – COOLING CAPACITIES 1-STAGE COOLING 8.5 TONS

48TC*A09 (RTPF)				AMBIENT TEMPERATURE											
				85			95			105			115		
				EAT (db)			EAT (db)			EAT (db)			EAT (db)		
				75	80	85	75	80	85	75	80	85	75	80	85
2550 Cfm	EAT (wb)	58	TC	88.1	88.1	99.9	84.1	84.1	95.3	79.6	79.6	90.3	74.9	74.9	84.9
			SHC	76.4	88.1	99.9	72.8	84.1	95.3	69.0	79.6	90.3	64.9	74.9	84.9
		62	TC	93.9	93.9	95.2	88.6	88.6	92.6	82.8	82.8	89.7	76.6	76.6	86.5
			SHC	69.4	82.3	95.2	66.8	79.7	92.6	64.1	76.9	89.7	61.0	73.8	86.5
		67	TC	103.8	103.8	103.8	98.7	98.7	98.7	93.0	93.0	93.0	86.7	86.7	86.7
			SHC	57.8	70.7	83.6	55.6	68.5	81.4	53.1	66.1	79.0	50.5	63.4	76.4
		72	TC	113.1	113.1	113.1	108.0	108.0	108.0	102.4	102.4	102.4	96.1	96.1	96.1
			SHC	45.2	58.3	71.3	43.2	56.3	69.3	41.1	54.1	67.1	38.7	51.7	64.7
		76	TC	–	119.9	119.9	–	114.7	114.7	–	109.0	109.0	–	102.7	102.7
			SHC	–	47.9	61.9	–	46.0	60.1	–	44.1	58.1	–	41.9	55.8
2975 Cfm	EAT (wb)	58	TC	93.6	93.6	106.1	89.3	89.3	101.2	84.6	84.6	96.0	79.6	79.6	90.3
			SHC	81.1	93.6	106.1	77.4	89.3	101.2	73.3	84.6	96.0	69.0	79.6	90.3
		62	TC	97.5	97.5	104.3	92.0	92.0	101.4	86.1	86.1	98.3	79.8	79.8	94.1
			SHC	74.7	89.5	104.3	72.0	86.7	101.4	69.1	83.7	98.3	65.6	79.8	94.1
		67	TC	106.7	106.7	106.7	101.5	101.5	101.5	95.7	95.7	95.7	89.2	89.2	89.2
			SHC	61.0	75.8	90.6	58.8	73.6	88.5	56.4	71.3	86.1	53.8	68.7	83.6
		72	TC	115.8	115.8	115.8	110.6	110.6	110.6	104.9	104.9	104.9	98.4	98.4	98.4
			SHC	46.5	61.3	76.2	44.5	59.4	74.2	42.3	57.2	72.1	40.0	54.8	69.7
		76	TC	–	122.4	122.4	–	117.0	117.0	–	111.1	111.1	–	104.5	104.5
			SHC	–	49.8	66.1	–	47.8	63.9	–	45.7	61.6	–	43.4	59.0
3400 Cfm	EAT (wb)	58	TC	98.1	98.1	111.3	93.7	93.7	106.2	88.9	88.9	100.8	83.7	83.7	94.9
			SHC	85.0	98.1	111.3	81.2	93.7	106.2	77.0	88.9	100.8	72.5	83.7	94.9
		62	TC	100.0	100.0	112.3	94.9	94.9	108.6	89.1	89.1	104.9	83.8	83.8	98.7
			SHC	79.3	95.8	112.3	76.3	92.5	108.6	73.2	89.1	104.9	68.8	83.8	98.7
		67	TC	109.0	109.0	109.0	103.6	103.6	103.6	97.6	97.6	97.6	91.0	91.0	91.0
			SHC	63.9	80.5	97.2	61.8	78.5	95.2	59.4	76.1	92.9	56.8	73.5	90.3
		72	TC	117.9	117.9	117.9	112.5	112.5	112.5	106.6	106.6	106.6	100.0	100.0	100.0
			SHC	47.6	64.1	80.6	45.6	62.1	78.7	43.4	60.0	76.6	41.1	57.6	74.2
		76	TC	–	124.2	124.2	–	118.6	118.6	–	112.5	112.5	–	105.7	105.7
			SHC	–	51.2	69.0	–	49.2	66.7	–	47.0	64.4	–	44.7	61.9
3825 Cfm	EAT (wb)	58	TC	101.6	101.6	115.1	97.2	97.2	110.1	92.3	92.3	104.6	87.0	87.0	98.6
			SHC	88.0	101.6	115.1	84.2	97.2	110.1	80.0	92.3	104.6	75.4	87.0	98.6
		62	TC	101.9	101.9	120.0	97.3	97.3	114.6	92.4	92.4	108.9	87.1	87.1	102.6
			SHC	83.7	101.8	120.0	79.9	97.3	114.6	75.9	92.4	108.9	71.6	87.1	102.6
		67	TC	110.7	110.7	110.7	105.3	105.3	105.3	99.2	99.2	99.3	92.5	92.5	96.7
			SHC	66.7	85.0	103.4	64.6	83.0	101.5	62.2	80.8	99.3	59.6	78.2	96.7
		72	TC	119.4	119.4	119.4	114.0	114.0	114.0	108.0	108.0	108.0	101.3	101.3	101.3
			SHC	48.5	66.6	84.6	46.6	64.7	82.7	44.4	62.6	80.7	42.1	60.2	78.4
		76	TC	–	125.5	125.5	–	119.8	119.8	–	113.6	113.6	–	106.7	106.7
			SHC	–	52.4	71.5	–	50.4	69.3	–	48.2	67.0	–	45.9	64.4
4250 Cfm	EAT (wb)	58	TC	104.4	104.4	118.3	99.9	99.9	113.2	95.0	95.0	107.6	89.5	89.5	101.5
			SHC	90.4	104.4	118.3	86.6	99.9	113.2	82.3	95.0	107.6	77.6	89.5	101.5
		62	TC	104.4	104.4	123.0	99.9	99.9	117.8	95.0	95.0	112.0	89.6	89.6	105.6
			SHC	85.8	104.4	123.0	82.1	99.9	117.8	78.1	95.0	112.0	73.6	89.6	105.6
		67	TC	112.1	112.1	112.1	106.6	106.6	107.5	100.4	100.4	105.3	93.6	93.6	102.7
			SHC	69.2	89.2	109.2	67.2	87.3	107.5	64.9	85.1	105.3	62.3	82.5	102.7
		72	TC	120.7	120.7	120.7	115.1	115.1	115.1	109.0	109.0	109.0	102.2	102.2	102.2
			SHC	49.4	68.9	88.4	47.4	67.0	86.5	45.3	64.9	84.6	42.9	62.6	82.3
		76	TC	–	126.6	126.6	–	120.8	120.8	–	114.5	114.5	–	107.4	107.4
			SHC	–	53.5	73.9	–	51.5	71.7	–	49.3	69.4	–	46.9	66.8

LEGEND:

– – Do not operate in this region
Cfm – Cubic feet per minute (supply air)
EAT(db) – Entering air temperature (dry bulb)
EAT(wb) – Entering air temperature (wet bulb)
SHC – Sensible heat capacity
TC – Total capacity

Table 25 – COOLING CAPACITIES 2-STAGE COOLING 8.5 TONS

48TC*D09 (RTPF)				AMBIENT TEMPERATURE											
				85			95			105			115		
				EA (dB)			EA (dB)			EA (dB)			EA (dB)		
				75	80	85	75	80	85	75	80	85	75	80	85
2550 Cfm	EAT (wb)	58	TC	89.7	89.7	101.6	85.2	85.2	96.5	79.6	79.6	90.1	73.8	73.8	83.6
			SHC	77.8	89.7	101.6	73.9	85.2	96.5	69.0	79.6	90.1	64.0	73.8	83.6
		62	TC	94.3	94.3	97.9	88.7	88.7	95.2	81.3	81.3	91.5	74.3	74.3	86.5
			SHC	71.0	84.4	97.9	68.2	81.7	95.2	64.7	78.1	91.5	60.6	73.6	86.5
		67	TC	105.0	105.0	105.0	99.3	99.3	99.3	92.2	92.2	92.2	84.1	84.1	84.1
			SHC	59.0	72.6	86.1	56.6	70.1	83.7	53.6	67.1	80.7	50.3	63.8	77.3
		72	TC	115.9	115.9	115.9	110.4	110.4	110.4	104.2	104.2	104.2	96.0	96.0	96.0
			SHC	46.4	60.0	73.6	44.3	57.9	71.5	41.9	55.5	69.1	38.8	52.4	65.9
		76	TC	–	123.7	123.7	–	118.3	118.3	–	112.4	112.4	–	105.7	105.7
			SHC	–	49.3	63.3	–	47.3	61.4	–	45.3	59.3	–	42.9	56.7
2975 Cfm	EAT (wb)	58	TC	95.3	95.3	107.9	90.7	90.7	102.7	84.8	84.8	96.1	78.7	78.7	89.1
			SHC	82.6	95.3	107.9	78.6	90.7	102.7	73.5	84.8	96.1	68.2	78.7	89.1
		62	TC	97.9	97.9	107.8	92.1	92.1	104.7	85.4	85.4	99.4	78.8	78.8	92.8
			SHC	76.7	92.2	107.8	73.9	89.3	104.7	69.6	84.5	99.4	64.8	78.8	92.8
		67	TC	108.5	108.5	108.5	102.6	102.6	102.6	95.4	95.4	95.4	86.9	86.9	86.9
			SHC	62.8	78.4	94.1	60.4	76.0	91.7	57.4	73.1	88.8	54.0	69.7	85.3
		72	TC	119.1	119.1	119.1	113.5	113.5	113.5	107.2	107.2	107.2	99.2	99.2	99.2
			SHC	47.9	63.5	79.2	45.8	61.5	77.1	43.5	59.2	74.9	40.6	56.3	72.0
		76	TC	–	126.4	126.4	–	120.8	120.8	–	114.8	114.8	–	108.2	108.2
			SHC	–	51.1	67.4	–	49.2	65.3	–	47.0	63.0	–	44.8	60.7
3400 Cfm	EAT (wb)	58	TC	100.0	100.0	113.3	95.2	95.2	107.9	89.3	89.3	101.1	82.9	82.9	93.9
			SHC	86.7	100.0	113.3	82.6	95.2	107.9	77.4	89.3	101.1	71.8	82.9	93.9
		62	TC	101.1	101.1	115.8	95.7	95.7	111.7	89.4	89.4	105.3	83.0	83.0	97.7
			SHC	81.5	98.7	115.8	78.2	94.9	111.7	73.5	89.4	105.3	68.2	83.0	97.7
		67	TC	111.1	111.1	111.1	105.1	105.1	105.1	97.8	97.8	97.8	89.1	89.1	93.0
			SHC	66.2	83.9	101.6	63.9	81.6	99.3	61.0	78.7	96.5	57.5	75.3	93.0
		72	TC	121.3	121.3	121.3	115.6	115.6	115.6	109.4	109.4	109.4	101.5	101.5	101.5
			SHC	49.2	66.7	84.3	47.1	64.7	82.3	44.9	62.5	80.2	42.1	59.9	77.7
		76	TC	–	128.3	128.3	–	122.6	122.6	–	116.3	116.3	–	109.7	109.7
			SHC	–	52.7	70.7	–	50.7	68.6	–	48.6	66.4	–	46.4	64.2
3825 Cfm	EAT (wb)	58	TC	104.0	104.0	117.8	99.1	99.1	112.3	93.2	93.2	105.5	86.5	86.5	97.9
			SHC	90.2	104.0	117.8	86.0	99.1	112.3	80.8	93.2	105.5	75.0	86.5	97.9
		62	TC	104.2	104.2	122.7	99.3	99.3	116.9	93.3	93.3	109.8	86.6	86.6	101.9
			SHC	85.7	104.2	122.7	81.7	99.3	116.9	76.7	93.3	109.8	71.2	86.6	101.9
		67	TC	113.1	113.1	113.1	107.1	107.1	107.1	99.9	99.9	103.8	91.0	91.0	100.3
			SHC	69.4	89.1	108.8	67.1	86.8	106.5	64.3	84.1	103.8	60.9	80.6	100.3
		72	TC	123.0	123.0	123.0	117.2	117.2	117.2	110.9	110.9	110.9	103.3	103.3	103.3
			SHC	50.3	69.7	89.0	48.3	67.7	87.1	46.1	65.6	85.2	43.5	63.3	83.0
		76	TC	–	129.7	129.7	–	124.0	124.0	–	117.5	117.5	–	110.8	110.8
			SHC	–	54.0	73.7	–	52.1	71.7	–	50.0	69.5	–	47.8	67.4
4250 Cfm	EAT (wb)	58	TC	107.4	107.4	121.7	102.5	102.5	116.1	96.5	96.5	109.3	89.5	89.5	101.4
			SHC	93.1	107.4	121.7	88.9	102.5	116.1	83.7	96.5	109.3	77.6	89.5	101.4
		62	TC	107.5	107.5	126.6	102.6	102.6	120.8	96.6	96.6	113.7	89.6	89.6	105.5
			SHC	88.4	107.5	126.6	84.4	102.6	120.8	79.5	96.6	113.7	73.7	89.6	105.5
		67	TC	114.7	114.7	115.6	108.7	108.7	113.5	101.7	101.7	110.8	92.6	92.6	107.2
			SHC	72.5	94.0	115.6	70.2	91.8	113.5	67.5	89.2	110.8	64.0	85.6	107.2
		72	TC	124.3	124.3	124.3	118.5	118.5	118.5	112.1	112.1	112.1	104.7	104.7	104.7
			SHC	51.3	72.4	93.4	49.3	70.5	91.7	47.2	68.5	89.9	44.7	66.4	88.1
		76	TC	–	130.7	130.7	–	125.0	125.0	–	118.5	118.5	–	111.6	111.6
			SHC	–	55.3	76.5	–	53.5	74.6	–	51.3	72.4	–	49.2	70.3

* See Minimum–Maximum Airflow Ratings in Table 6. Do not operate outside these limits.

LEGEND:

– – Do not operate in this region
Cfm – Cubic feet per minute (supply air)
EAT(db) – Entering air temperature (dry bulb)
EAT(wb) – Entering air temperature (wet bulb)
SHC – Sensible heat capacity
TC – Total capacity

48TC09 COOLING CAPACITIES, UNIT WITH HUMIDI–MIZER SYSTEM IN SUBCOOLING MODE										
TEMP (F) AIR ENT CONDENSER (Edb)		AIR ENTERING EVAPORATOR – CFM								
		2550/0.04			3400/0.05			4250/0.07		
		Air Entering Evaporator – Ewb (F)								
		72	67	62	72	67	62	72	67	62
75	TC	119.20	107.44	96.41	126.95	114.98	103.92	131.87	119.81	109.54
	SHC	50.63	63.94	77.40	59.17	76.72	94.21	66.80	88.44	108.22
	kW	5.67	5.57	5.47	5.54	5.63	5.74	5.79	5.68	5.59
85	TC	110.40	99.22	88.76	117.63	106.26	95.77	122.21	110.77	101.07
	SHC	42.39	56.16	70.07	50.42	68.45	86.38	57.71	79.86	99.95
	kW	6.33	6.23	6.14	6.20	6.30	6.40	6.45	6.34	6.25
95	TC	101.37	90.79	80.86	108.07	97.31	87.39	112.29	101.47	92.38
	SHC	33.97	48.22	62.56	41.46	60.01	78.39	48.40	71.09	91.47
	kW	7.08	6.99	6.90	6.96	7.05	7.16	7.20	7.09	7.01
105	TC	92.04	82.06	72.71	98.19	88.05	78.72	102.07	91.86	83.40
	SHC	25.31	40.06	54.88	32.24	51.33	70.17	38.85	62.06	82.67
	kW	7.94	7.85	7.77	7.83	7.91	8.01	8.06	7.95	7.87
115	TC	82.37	73.01	64.24	87.95	78.45	69.73	91.46	81.90	74.09
	SHC	16.38	31.65	46.95	22.71	42.37	61.69	28.94	52.74	73.52
	kW	8.92	8.84	8.77	8.82	8.89	8.98	9.02	8.93	8.86

48TC09 COOLING CAPACITIES, UNIT WITH HUMIDI–MIZER SYSTEM IN HOT GAS REHEAT MODE										
TEMP (F) AIR ENT CONDENSER (Edb)		AIR ENTERING EVAPORATOR – Ewb (F)								
		75 Dry Bulb 62.5 Wet Bulb (50% Relative)			75 Dry Bulb 64 Wet Bulb (56% Relative)			75 Dry Bulb 65.3 Wet Bulb (60% Relative)		
		Air Entering Evaporator – Cfm								
		2550	3400	4250	2550	3400	4250	2550	3400	4250
80	TC	37.61	33.13	26.77	44.74	41.60	36.46	50.96	48.99	44.93
	SHC	–0.52	–0.63	–0.73	–0.46	–0.57	–0.67	–0.42	–0.53	–0.62
	kW	5.88	5.68	5.44	6.13	5.97	5.76	6.35	6.24	6.06
75	TC	38.71	34.24	27.86	45.84	42.73	37.59	52.05	50.11	46.06
	SHC	0.45	0.34	0.25	0.50	0.40	0.31	0.54	0.44	0.36
	kW	5.68	5.47	5.22	5.94	5.78	5.56	6.18	6.07	5.88
70	TC	39.70	35.25	28.83	46.80	43.70	38.59	52.97	51.04	47.02
	SHC	1.41	1.32	1.23	1.47	1.37	1.29	1.50	1.41	1.34
	kW	5.65	5.42	5.24	5.97	5.79	5.53	6.26	6.13	5.91
60	TC	41.77	37.33	30.76	48.86	45.80	40.71	55.00	53.10	49.12
	SHC	3.34	3.26	3.18	3.40	3.32	3.25	3.43	3.36	3.29
	kW	5.42	5.15	5.17	5.80	5.59	5.30	6.16	6.01	5.75
50	TC	43.83	39.27	32.61	50.92	47.89	42.70	57.04	55.16	51.22
	SHC	5.27	5.21	5.14	5.32	5.27	5.21	5.36	5.31	5.25
	kW	5.18	5.15	5.17	5.62	5.39	5.05	6.04	5.87	5.59
40	TC	45.75	41.13	34.50	53.08	50.00	44.64	59.24	57.40	53.44
	SHC	7.20	7.15	6.95	7.26	7.21	7.16	7.29	7.25	7.21
	kW	4.79	4.98	4.80	5.25	5.01	5.23	5.68	5.51	5.21

LEGEND

Edb – Entering Dry–Bulb
Ewb – Entering Wet–Bulb
kW – Compressor Motor Power Input
ldb – Leaving Dry–Bulb
lwb – Leaving Wet–Bulb
SHC – Sensible Heat Capacity (1000 Btuh) Gross
TC – Total Capacity (1000 Btuh) Gross

NOTES:

1. Direct interpolation is permissible. Do not extrapolate.
2. The following formulas may be used:

$$t_{ldb} = t_{edb} - \frac{\text{sensible capacity (Btuh)}}{1.10 \times \text{cfm}}$$

t_{lwb} = Wet–bulb temperature corresponding to enthalpy of air leaving evaporator coil (h_{lwb})

$$h_{lwb} = h_{ewb} - \frac{\text{total capacity (Btuh)}}{4.5 \times \text{cfm}}$$

Where: h_{ewb} = Enthalpy of air entering evaporator coil

Table 27 – COOLING CAPACITIES 1-STAGE COOLING 10 TONS

48TC*A12 (RTPF)				AMBIENT TEMPERATURE											
				85			95			105			115		
				EAT (db)			EAT (db)			EAT (db)			EAT (db)		
				75	80	85	75	80	85	75	80	85	75	80	85
3000 Cfm	EAT (wb)	58	TC	106.3	106.3	120.5	101.7	101.7	115.2	96.6	96.6	109.4	91.0	91.0	103.1
			SHC	92.2	106.3	120.5	88.2	101.7	115.2	83.8	96.6	109.4	78.9	91.0	103.1
		62	TC	112.5	112.5	115.2	106.5	106.5	112.3	99.9	99.9	109.0	92.7	92.7	105.2
			SHC	83.8	99.5	115.2	81.0	96.6	112.3	77.8	93.4	109.0	74.2	89.7	105.2
		67	TC	123.5	123.5	123.5	117.8	117.8	117.8	111.3	111.3	111.3	104.0	104.0	104.0
			SHC	69.2	85.0	100.7	66.8	82.5	98.3	64.1	79.8	95.5	61.0	76.8	92.5
		72	TC	134.3	134.3	134.3	128.5	128.5	128.5	122.0	122.0	122.0	114.7	114.7	114.7
			SHC	53.8	69.6	85.5	51.6	67.4	83.2	49.1	64.9	80.7	46.3	62.1	77.9
		76	TC	–	142.4	142.4	–	136.3	136.3	–	129.5	129.5	–	121.8	121.8
			SHC	–	56.8	73.3	–	54.7	71.2	–	52.3	68.8	–	49.7	66.2
3500 Cfm	EAT (wb)	58	TC	112.9	112.9	127.8	108.0	108.0	122.3	102.7	102.7	116.3	96.8	96.8	109.7
			SHC	97.9	112.9	127.8	93.6	108.0	122.3	89.0	102.7	116.3	83.9	96.8	109.7
		62	TC	116.3	116.3	126.2	110.5	110.5	123.3	103.8	103.8	119.5	97.1	97.1	114.3
			SHC	90.2	108.2	126.2	87.4	105.3	123.3	84.0	101.8	119.5	79.8	97.1	114.3
		67	TC	126.9	126.9	126.9	120.9	120.9	120.9	114.3	114.3	114.3	106.8	106.8	106.8
			SHC	73.2	91.3	109.4	70.8	88.9	107.1	68.1	86.2	104.4	65.0	83.2	101.3
		72	TC	137.5	137.5	137.5	131.4	131.4	131.4	124.7	124.7	124.7	117.2	117.2	117.2
			SHC	55.3	73.4	91.5	53.1	71.1	89.2	50.6	68.7	86.7	47.8	65.9	83.9
		76	TC	–	145.1	145.1	–	138.8	138.8	–	131.7	131.7	–	123.6	123.6
			SHC	–	59.0	78.2	–	56.7	75.8	–	54.3	73.1	–	51.5	70.0
4000 Cfm	EAT (wb)	58	TC	117.8	117.8	133.5	113.0	113.0	128.0	107.5	107.5	121.8	101.5	101.5	115.0
			SHC	102.2	117.8	133.5	98.0	113.0	128.0	93.3	107.5	121.8	88.0	101.5	115.0
		62	TC	119.1	119.1	136.0	113.5	113.5	132.5	107.7	107.7	126.7	101.6	101.6	119.6
			SHC	95.8	115.9	136.0	92.8	112.6	132.5	88.6	107.7	126.7	83.6	101.6	119.6
		67	TC	129.4	129.4	129.4	123.3	123.3	123.3	116.5	116.5	116.5	108.9	108.9	109.8
			SHC	76.9	97.3	117.7	74.5	95.0	115.4	71.8	92.3	112.8	68.8	89.3	109.8
		72	TC	139.7	139.7	139.7	133.5	133.5	133.5	126.6	126.6	126.6	118.8	118.8	118.8
			SHC	56.7	76.8	97.0	54.4	74.6	94.7	51.9	72.1	92.3	49.1	69.3	89.5
		76	TC	–	147.0	147.0	–	140.5	140.5	–	133.2	133.2	–	124.9	124.9
			SHC	–	60.6	81.7	–	58.4	79.3	–	55.8	76.5	–	53.0	73.5
4500 Cfm	EAT (wb)	58	TC	121.7	121.7	137.9	116.8	116.8	132.3	111.2	111.2	126.0	105.0	105.0	118.9
			SHC	105.6	121.7	137.9	101.3	116.8	132.3	96.4	111.2	126.0	91.0	105.0	118.9
		62	TC	121.8	121.8	143.4	116.9	116.9	137.6	111.3	111.3	131.0	105.1	105.1	123.7
			SHC	100.2	121.8	143.4	96.1	116.9	137.6	91.6	111.3	131.0	86.5	105.1	123.7
		67	TC	131.3	131.3	131.3	125.1	125.1	125.1	118.2	118.2	120.8	110.5	110.5	117.7
			SHC	80.3	102.9	125.5	78.0	100.7	123.3	75.3	98.0	120.8	72.3	95.0	117.7
		72	TC	141.5	141.5	141.5	135.1	135.1	135.1	128.0	128.0	128.0	120.1	120.1	120.1
			SHC	57.9	80.0	102.1	55.6	77.7	99.9	53.1	75.2	97.4	50.3	72.4	94.6
		76	TC	–	148.3	148.3	–	141.8	141.8	–	134.3	134.3	–	125.8	125.8
			SHC	–	62.1	84.9	–	59.8	82.5	–	57.3	79.7	–	54.4	76.6
5000 Cfm	EAT (wb)	58	TC	125.0	125.0	141.6	120.0	120.0	135.9	114.3	114.3	129.5	107.9	107.9	122.3
			SHC	108.4	125.0	141.6	104.0	120.0	135.9	99.1	114.3	129.5	93.6	107.9	122.3
		62	TC	125.1	125.1	147.2	120.1	120.1	141.4	114.4	114.4	134.7	108.0	108.0	127.2
			SHC	102.9	125.1	147.2	98.8	120.1	141.4	94.1	114.4	134.7	88.9	108.0	127.2
		67	TC	132.8	132.8	133.0	126.5	126.5	130.8	119.6	119.6	128.2	111.8	111.8	125.1
			SHC	83.6	108.3	133.0	81.2	106.0	130.8	78.6	103.4	128.2	75.6	100.3	125.1
		72	TC	142.8	142.8	142.8	136.3	136.3	136.3	129.1	129.1	129.1	121.1	121.1	121.1
			SHC	59.0	82.9	106.9	56.7	80.7	104.7	54.1	78.2	102.2	51.3	75.4	99.4
		76	TC	–	149.4	149.4	–	142.8	142.8	–	135.1	135.1	–	126.5	126.5
			SHC	–	63.4	87.9	–	61.2	85.5	–	58.6	82.7	–	55.6	79.4

LEGEND:

– – Do not operate in this region
Cfm – Cubic feet per minute (supply air)
EAT(db) – Entering air temperature (dry bulb)
EAT(wb) – Entering air temperature (wet bulb)
SHC – Sensible heat capacity
TC – Total capacity

Table 28 – COOLING CAPACITIES 2-STAGE COOLING 10 TONS

48TC*D12 (RTPF & Novation)				AMBIENT TEMPERATURE											
				85			95			105			115		
				EAT (db)			EAT (db)			EAT (db)			EAT (db)		
				75	80	85	75	80	85	75	80	85	75	80	85
3000 Cfm	EAT (wb)	58	TC	107.6	107.6	121.9	102.5	102.5	116.2	96.8	96.8	109.7	90.5	90.5	102.6
			SHC	93.2	107.6	121.9	88.8	102.5	116.2	83.9	96.8	109.7	78.4	90.5	102.6
		62	TC	113.6	113.6	116.5	107.1	107.1	113.4	99.7	99.7	109.8	91.8	91.8	104.9
			SHC	84.6	100.6	116.5	81.5	97.4	113.4	78.0	93.9	109.8	73.7	89.3	104.9
		67	TC	124.4	124.4	124.4	118.4	118.4	118.4	111.5	111.5	111.5	103.3	103.3	103.3
			SHC	69.7	85.7	101.7	67.1	83.2	99.2	64.3	80.3	96.3	60.8	76.8	92.8
		72	TC	135.8	135.8	135.8	129.7	129.7	129.7	122.8	122.8	122.8	115	115	115
			SHC	54.3	70.4	86.6	52.0	68.1	84.2	49.3	65.4	81.6	46.4	62.5	78.6
		76	TC	–	145.3	145.3	–	139	139	–	131.9	131.9	–	124.1	124.1
			SHC	–	57.8	74.3	–	55.6	72.1	–	53.1	69.6	–	50.4	66.9
3500 Cfm	EAT (wb)	58	TC	114.2	114.2	129.4	108.9	108.9	123.4	102.9	102.9	116.6	96.3	96.3	109.1
			SHC	98.9	114.2	129.4	94.3	108.9	123.4	89.1	102.9	116.6	83.4	96.3	109.1
		62	TC	117.2	117.2	127.9	111.0	111.0	124.7	104.0	104.0	119.5	96.5	96.5	113.7
			SHC	91.1	109.5	127.9	88.1	106.4	124.7	83.9	101.7	119.5	79.3	96.5	113.7
		67	TC	127.8	127.8	127.8	121.7	121.7	121.7	114.5	114.5	114.5	106.6	106.6	106.6
			SHC	73.8	92.3	110.8	71.3	89.8	108.3	68.4	87.0	105.5	65.2	83.8	102.3
		72	TC	139.4	139.4	139.4	133.0	133.0	133	125.8	125.8	125.8	117.9	117.9	117.9
			SHC	56.0	74.6	93.1	53.7	72.2	90.8	51.0	69.6	88.2	48.1	66.7	85.4
		76	TC	–	148.8	148.8	–	142.2	142.2	–	134.9	134.9	–	126.8	126.8
			SHC	–	60.2	79.5	–	58.0	77.1	–	55.4	74.5	–	52.7	71.6
4000 Cfm	EAT (wb)	58	TC	119.0	119.0	134.9	114.0	114.0	129.2	108.0	108.0	122.4	101.1	101.1	114.6
			SHC	103.1	119.0	134.9	98.7	114.0	129.2	93.6	108.0	122.4	87.6	101.1	114.6
		62	TC	120.3	120.3	137.1	114.7	114.7	132.8	108.2	108.2	127.5	101.3	101.3	119.3
			SHC	96.5	116.8	137.1	93.0	112.9	132.8	88.9	108.2	127.5	83.2	101.3	119.3
		67	TC	130.5	130.5	130.5	124.1	124.1	124.1	116.8	116.8	116.8	108.7	108.7	111.1
			SHC	77.7	98.6	119.5	75.2	96.2	117.2	72.3	93.3	114.4	69.1	90.1	111.1
		72	TC	142.1	142.1	142.1	135.5	135.5	135.5	128.2	128.2	128.2	120.0	120.0	120.0
			SHC	57.6	78.4	99.3	55.2	76.1	97.1	52.5	73.6	94.6	49.7	70.7	91.8
		76	TC	–	151.4	151.4	–	144.7	144.7	–	137.1	137.1	–	–	–
			SHC	–	62.3	83.8	–	60.0	81.4	–	57.5	78.8	–	–	–
4500 Cfm	EAT (wb)	58	TC	123.0	123.0	139.5	117.8	117.8	133.6	111.9	111.9	126.9	105.3	105.3	119.3
			SHC	106.6	123.0	139.5	102.1	117.8	133.6	97.0	111.9	126.9	91.2	105.3	119.3
		62	TC	123.4	123.4	144.4	117.9	117.9	139.0	112.0	112.0	132.0	105.4	105.4	124.2
			SHC	100.9	122.7	144.4	96.9	117.9	139	92.1	112.0	132	86.6	105.4	124.2
		67	TC	132.6	132.6	132.6	126.0	126	126.0	118.7	118.7	122.9	110.4	110.4	119.6
			SHC	81.4	104.6	127.9	78.9	102.3	125.7	76.1	99.5	122.9	72.9	96.2	119.6
		72	TC	144.2	144.2	144.2	137.4	137.4	137.4	129.9	129.9	129.9	121.6	121.6	121.6
			SHC	59.0	82.1	105.2	56.6	79.8	103.1	54.0	77.3	100.7	51.1	74.5	98
		76	TC	–	153.4	153.4	–	146.6	146.6	–	138.9	138.9	–	–	–
			SHC	–	64.1	87.8	–	61.9	85.6	–	59.4	83	–	–	–
5000 Cfm	EAT (wb)	58	TC	126.5	126.5	143.3	121.2	121.2	137.4	115.1	115.1	130.5	108.4	108.4	122.8
			SHC	109.6	126.5	143.3	105.0	121.2	137.4	99.8	115.1	130.5	93.9	108.4	122.8
		62	TC	126.5	126.5	149.1	121.3	121.3	142.9	115.2	115.2	135.8	108.5	108.5	127.8
			SHC	104.0	126.5	149.1	99.7	121.3	142.9	94.7	115.2	135.8	89.1	108.5	127.8
		67	TC	134.2	134.2	135.9	127.5	127.5	133.8	120.1	120.1	131.0	111.9	111.9	127.6
			SHC	84.9	110.4	135.9	82.4	108.1	133.8	79.6	105.3	131	76.4	102.0	127.6
		72	TC	145.8	145.8	145.8	139.0	139.0	139.0	131.3	131.3	131.3	122.9	122.9	122.9
			SHC	60.3	85.6	110.8	57.9	83.4	108.9	55.3	81.0	106.6	52.5	78.2	104
		76	TC	–	155.1	155.1	–	148.2	148.2	–	–	–	–	–	–
			SHC	–	65.9	91.5	–	63.7	89.5	–	–	–	–	–	–

* See Minimum–Maximum Airflow Ratings in Table 6. Do not operate outside these limits.

LEGEND:

– – Do not operate in this region
Cfm – Cubic feet per minute (supply air)
EAT(db) – Entering air temperature (dry bulb)
EAT(wb) – Entering air temperature (wet bulb)
SHC – Sensible heat capacity
TC – Total capacity

48TC12 COOLING CAPACITIES, UNIT WITH HUMIDI–MIZER SYSTEM IN SUBCOOLING MODE										
TEMP (F) AIR ENT CONDENSER (Edb)		AIR ENTERING EVAPORATOR – CFM								
		3000/0.04			4000/0.06			5000/0.07		
		Air Entering Evaporator – Ewb (F)								
		72	67	62	72	67	62	72	67	62
75	TC	142.85	129.44	116.93	152.09	138.44	125.76	157.99	144.23	132.06
	SHC	58.38	74.88	91.58	67.96	89.45	111.02	76.63	102.94	127.93
	kW	7.19	6.97	6.79	6.92	7.12	7.35	7.45	7.22	7.02
85	TC	132.33	119.68	107.86	140.92	128.03	116.10	146.41	133.41	121.98
	SHC	48.44	65.56	82.83	57.37	79.50	101.68	65.65	92.58	118.12
	kW	7.98	7.77	7.58	7.72	7.92	8.14	8.25	8.01	7.82
95	TC	121.41	109.52	98.43	129.35	117.22	106.04	134.43	122.20	111.50
	SHC	38.19	55.92	73.78	46.47	69.22	92.01	54.34	81.92	107.96
	kW	8.87	8.66	8.48	8.61	8.80	9.03	9.14	8.90	8.71
105	TC	110.04	98.92	88.56	117.27	105.94	95.53	121.88	110.46	100.54
	SHC	27.59	45.94	64.39	35.16	58.57	81.98	42.56	70.82	97.40
	kW	9.86	9.66	9.48	9.61	9.79	10.02	10.12	9.89	9.70
115	TC	98.09	87.74	78.13	104.62	94.08	84.45	108.76	98.13	89.01
	SHC	16.52	35.47	54.53	23.37	47.44	71.46	30.32	59.25	86.31
	kW	10.95	10.76	10.60	10.72	10.89	11.10	11.19	10.98	10.81

48TC12 COOLING CAPACITIES, UNIT WITH HUMIDI–MIZER SYSTEM IN HOT GAS REHEAT MODE										
TEMP (F) AIR ENT CONDENSER (Edb)		AIR ENTERING EVAPORATOR – Ewb (F)								
		75 Dry Bulb 62.5 Wet Bulb (50% Relative)			75 Dry Bulb 64 Wet Bulb (56% Relative)			75 Dry Bulb 65.3 Wet Bulb (60% Relative)		
		Air Entering Evaporator – Cfm								
		3000	4000	5000	3000	4000	5000	3000	4000	5000
80	TC	44.78	39.41	31.89	53.22	49.44	43.38	60.56	58.12	53.32
	SHC	–0.44	–0.57	–0.69	–0.37	–0.51	–0.61	–0.33	–0.46	–0.56
	kW	6.96	6.77	6.52	7.26	7.13	6.91	7.54	7.45	7.27
75	TC	45.84	40.46	32.86	54.28	50.51	44.45	61.61	59.19	54.40
	SHC	0.53	0.40	0.29	0.60	0.47	0.37	0.64	0.52	0.42
	kW	6.77	6.56	6.29	7.11	6.95	6.72	7.41	7.31	7.12
70	TC	46.91	41.48	33.50	55.36	51.59	45.50	62.69	60.28	55.49
	SHC	1.51	1.38	1.27	1.57	1.45	1.35	1.61	1.50	1.40
	kW	6.54	6.32	6.02	6.90	6.74	6.49	7.23	7.13	6.92
60	TC	48.88	43.42	35.76	57.29	53.56	47.48	64.56	62.16	57.42
	SHC	3.44	3.34	3.24	3.51	3.40	3.31	3.55	3.45	3.37
	kW	6.45	6.16	6.70	6.93	6.72	6.39	7.38	7.24	6.96
50	TC	50.83	45.28	37.67	59.22	55.52	49.43	66.05	64.03	59.34
	SHC	5.38	5.29	5.20	5.45	5.36	5.28	5.48	5.40	5.33
	kW	6.46	6.01	6.34	6.98	6.71	6.29	8.15	7.38	7.02
40	TC	52.82	47.29	39.50	61.14	57.48	51.39	68.23	65.88	61.25
	SHC	7.32	7.24	7.20	7.38	7.31	7.24	7.43	7.36	7.29
	kW	6.29	6.09	6.12	7.05	6.72	6.29	7.78	7.55	7.10

LEGEND

Edb – Entering Dry–Bulb
Ewb – Entering Wet–Bulb
kW – Compressor Motor Power Input
ldb – Leaving Dry–Bulb
lwb – Leaving Wet–Bulb
SHC – Sensible Heat Capacity (1000 Btuh) Gross
TC – Total Capacity (1000 Btuh) Gross

NOTES:

1. Direct interpolation is permissible. Do not extrapolate.
2. The following formulas may be used:

$$t_{ldb} = t_{edb} - \frac{\text{sensible capacity (Btuh)}}{1.10 \times \text{cfm}}$$

t_{lwb} = Wet–bulb temperature corresponding to enthalpy of air leaving evaporator coil (h_{lwb})

$$h_{lwb} = h_{ewb} - \frac{\text{total capacity (Btuh)}}{4.5 \times \text{cfm}}$$

Where: h_{ewb} = Enthalpy of air entering evaporator coil

Table 30 – COOLING CAPACITIES 2-STAGE COOLING 12.5 TONS

48TC*D14 (RTPF & Novation)				AMBIENT TEMPERATURE											
				85			95			105			115		
				EAT (db)			EAT (db)			EAT (db)			EAT (db)		
				75	80	85	75	80	85	75	80	85	75	80	85
3600 Cfm	EAT (wb)	58	TC	127.6	127.6	142.9	121.7	121.7	137.6	115.0	115.0	130	108.3	108.3	122.6
			SHC	110.3	126.6	142.9	105.8	121.7	137.6	99.9	115.0	130	94.1	108.3	122.6
		62	TC	136.1	136.1	136.1	131.1	131.1	131.1	123.8	123.8	124.5	114.9	114.9	120.3
			SHC	96.6	112.8	129.0	94.7	111.2	127.7	91.4	108.0	124.5	87.3	103.8	120.3
		67	TC	146.2	146.2	146.2	142.0	142.0	142.0	136.2	136.2	136.2	128.8	128.8	128.8
			SHC	78.5	94.4	110.3	76.9	93.1	109.2	74.7	91.0	107.3	71.7	88.1	104.6
		72	TC	155.9	155.9	155.9	152.4	152.4	152.4	147.2	147.2	147.2	140.1	140.1	140.1
			SHC	60.1	76.6	93.2	58.7	75.2	91.7	56.8	73.3	89.7	54.2	70.6	87.0
		76	TC	–	163.0	163	–	160.0	160	–	155.1	155.1	–	148.2	148.2
			SHC	–	62.0	81.8	–	61.1	80.9	–	59.5	79.3	–	57.0	76.3
4200 Cfm	EAT (wb)	58	TC	132.2	132.2	149.5	128.2	128.2	144.9	121.9	121.9	137.8	115.0	115.0	130.1
			SHC	115.0	132.2	149.5	111.5	128.2	144.9	106.0	121.9	137.8	99.9	115.0	130.1
		62	TC	139.6	139.6	139.6	134.7	134.7	138	128.0	128.0	135.6	119.1	119.1	131.2
			SHC	102.5	120.8	139	100.8	119.4	138	98.1	116.8	135.6	93.9	112.6	131.2
		67	TC	149.5	149.5	149.5	145.4	145.4	145.4	139.6	139.6	139.6	132.1	132.1	132.1
			SHC	81.8	99.6	117.4	80.6	98.7	116.8	78.5	96.9	115.2	75.7	94.3	112.8
		72	TC	159.0	159.0	159.0	155.5	155.5	155.5	150.3	150.3	150.3	143.1	143.1	143.1
			SHC	61.4	79.6	97.8	60.2	78.5	96.8	58.3	76.7	95	55.8	74.2	92.5
		76	TC	–	165.7	165.7	–	162.8	162.8	–	157.8	157.8	–	150.8	150.8
			SHC	–	64.6	87.7	–	63.5	86.3	–	61.5	83.3	–	58.9	79.9
4800 Cfm	EAT (wb)	58	TC	136.7	136.7	154.5	133.0	133.0	150.3	127.7	127.7	144.3	120.6	120.6	136.4
			SHC	118.9	136.7	154.5	115.7	133.0	150.3	111.0	127.7	144.3	104.9	120.6	136.4
		62	TC	142.2	142.2	147.8	137.4	137.4	147.1	131.0	131.0	144.7	122.8	122.8	140.3
			SHC	107.7	127.8	147.8	106.2	126.7	147.1	103.6	124.2	144.7	99.3	119.8	140.3
		67	TC	152.1	152.1	152.1	148.0	148	148	142.2	142.2	142.2	134.6	134.6	134.6
			SHC	84.8	104.3	123.7	83.8	103.8	123.7	82.0	102.3	122.6	79.4	99.9	120.4
		72	TC	161.3	161.3	161.3	157.8	157.8	157.8	152.5	152.5	152.5	145.4	145.4	145.4
			SHC	62.6	82.2	101.9	61.4	81.4	101.3	59.7	79.7	99.8	57.2	77.3	97.5
		76	TC	–	167.7	167.7	–	164.9	164.9	–	159.9	159.9	–	152.8	152.8
			SHC	–	66.4	91.4	–	65	89.2	–	63.1	86.4	–	60.5	83.1
5400 Cfm	EAT (wb)	58	TC	140.5	140.5	158.8	136.9	136.9	154.7	131.8	131.8	149	125.2	125.2	141.6
			SHC	122.2	140.5	158.8	119	136.9	154.7	114.7	131.8	149	108.9	125.2	141.6
		62	TC	144.3	144.3	155.7	139.6	139.6	155	133.5	133.5	152.4	125.8	125.8	147.8
			SHC	112.2	133.9	155.7	110.9	132.9	155	108.1	130.2	152.4	103.9	125.8	147.8
		67	TC	154.2	154.2	154.2	150.0	150.0	150.0	144.2	144.2	144.2	136.7	136.7	136.7
			SHC	87.6	108.6	129.6	86.8	108.5	130.1	85.2	107.3	129.4	82.8	105.1	127.4
		72	TC	163.1	163.1	163.1	159.7	159.7	159.7	154.3	154.3	154.3	147.1	147.1	147.1
			SHC	63.6	84.6	105.6	62.5	83.9	105.4	60.8	82.5	104.2	58.4	80.2	102
		76	TC	–	169.3	169.3	–	166.5	166.5	–	161.5	161.5	–	154.2	154.2
			SHC	–	67.6	93.7	–	66.4	91.7	–	64.5	89.2	–	61.9	86.1
6000 Cfm	EAT (wb)	58	TC	143.6	143.6	162.3	140.1	140.1	158.3	135.1	135.1	152.7	128.7	128.7	145.5
			SHC	124.9	143.6	162.3	121.8	140.1	158.3	117.5	135.1	152.7	111.9	128.7	145.5
		62	TC	146.1	146.1	162.4	141.7	141.7	161.5	135.6	135.6	159.2	128.8	128.8	151.2
			SHC	116.1	139.3	162.4	114.7	138.1	161.5	112.1	135.6	159.2	106.4	128.8	151.2
		67	TC	155.8	155.8	155.8	151.6	151.6	151.6	145.9	145.9	145.9	138.3	138.3	138.3
			SHC	90.1	112.6	135	89.6	112.8	136	88.3	112.0	135.8	85.9	110.0	134.1
		72	TC	164.5	164.5	164.5	161.2	161.2	161.2	155.8	155.8	155.8	148.5	148.5	148.5
			SHC	64.5	86.7	108.9	63.5	86.3	109.1	61.9	85.1	108.2	59.6	82.9	106.3
		76	TC	–	170.6	170.6	–	167.8	167.8	–	162.8	162.8	–	155.5	155.5
			SHC	–	68.7	95.8	–	67.5	94.1	–	65.7	91.8	–	63.3	88.8

* See Minimum–Maximum Airflow Ratings in Table 6. Do not operate outside these limits.

LEGEND:

– – Do not operate in this region
Cfm – Cubic feet per minute (supply air)
EAT(db) – Entering air temperature (dry bulb)
EAT(wb) – Entering air temperature (wet bulb)
SHC – Sensible heat capacity
TC – Total capacity

48TC14 COOLING CAPACITIES, UNIT WITH HUMIDI–MIZER SYSTEM IN SUBCOOLING MODE										
TEMP (F) AIR ENT CONDENSER (Edb)		AIR ENTERING EVAPORATOR – CFM								
		3750/0.02			5000/0.06			6250/0.05		
		Air Entering Evaporator – Ewb (F)								
		72	67	62	72	67	62	72	67	62
75	TC	183.66	166.86	151.43	194.90	177.83	162.05	201.97	184.84	170.53
	SHC	79.39	100.52	121.91	91.70	119.42	147.05	102.94	137.00	166.71
	kW	9.82	9.63	9.46	9.58	9.76	9.96	10.04	9.84	9.67
85	TC	172.71	156.78	142.09	183.32	167.13	152.17	189.98	173.73	160.25
	SHC	69.03	90.92	112.95	80.69	109.17	137.51	91.49	126.33	156.65
	kW	10.82	10.63	10.45	10.57	10.76	10.96	11.04	10.84	10.67
95	TC	161.37	146.24	132.38	171.36	156.04	141.86	177.62	162.22	149.50
	SHC	58.44	81.04	103.77	69.42	98.67	127.71	79.83	115.45	146.15
	kW	11.92	11.73	11.56	11.68	11.86	12.05	12.14	11.93	11.77
105	TC	149.57	135.32	122.21	158.89	144.45	131.10	164.74	150.27	138.35
	SHC	47.57	70.92	94.32	57.85	87.91	117.61	67.79	104.26	135.30
	kW	13.12	12.94	12.77	12.89	13.06	13.24	13.32	13.13	12.97
115	TC	137.22	123.88	111.55	145.85	132.33	119.84	151.27	137.71	126.67
	SHC	36.31	60.47	84.57	45.87	76.77	107.19	55.34	92.66	123.98
	kW	14.41	14.25	14.10	14.20	14.35	14.53	14.59	14.42	14.28

48TC14 COOLING CAPACITIES, UNIT WITH HUMIDI–MIZER SYSTEM IN HOT GAS REHEAT MODE										
TEMP (F)AIR ENT CONDENSER(Edb)		AIR ENTERING EVAPORATOR – Ewb (F)								
		75 Dry Bulb 62.5 Wet Bulb (50% Relative)			75 Dry Bulb 64 Wet Bulb (56% Relative)			75 Dry Bulb 65.3 Wet Bulb (60% Relative)		
		Air Entering Evaporator – Cfm								
		3750	5000	6250	3750	5000	6250	3750	5000	6250
80	TC	52.42	45.88	36.99	62.64	58.07	51.07	71.56	68.64	63.23
	SHC	–0.39	–0.54	–0.67	–0.31	–0.46	–0.58	–0.26	–0.40	–0.52
	kW	9.65	9.39	9.07	9.97	9.77	9.50	10.25	10.11	9.89
75	TC	53.45	46.63	36.10	63.77	59.11	51.87	72.76	69.80	64.31
	SHC	0.59	0.44	0.30	0.67	0.52	0.40	0.72	0.58	0.47
	kW	9.09	8.83	8.49	9.39	9.20	8.94	9.67	9.53	9.32
70	TC	54.33	46.91	37.58	64.77	60.01	52.30	73.80	70.80	65.24
	SHC	1.56	1.41	1.29	1.64	1.50	1.38	1.70	1.56	1.45
	kW	8.81	8.53	8.62	9.15	8.94	8.65	9.46	9.31	9.08
60	TC	55.47	49.48	40.48	66.62	62.07	54.88	75.68	72.76	67.28
	SHC	3.50	3.38	3.27	3.59	3.47	3.36	3.65	3.52	3.42
	kW	8.36	8.84	8.98	9.88	9.56	9.10	9.83	9.64	9.31
50	TC	58.33	51.72	42.81	68.72	63.93	55.84	77.74	74.77	69.24
	SHC	5.47	5.35	5.24	5.54	5.43	5.32	5.60	5.49	5.39
	kW	8.98	9.25	9.43	9.33	8.97	8.73	9.55	9.33	9.70
40	TC	60.33	53.69	46.89	70.67	65.93	49.83	79.46	76.62	71.24
	SHC	7.42	7.31	7.22	7.49	7.39	7.23	7.55	7.45	7.37
	kW	9.16	9.88	9.06	9.50	9.05	9.47	10.31	10.00	9.48

LEGEND

Edb – Entering Dry–Bulb
Ewb – Entering Wet–Bulb
kW – Compressor Motor Power Input
ldb – Leaving Dry–Bulb
lwb – Leaving Wet–Bulb
SHC – Sensible Heat Capacity (1000 Btuh) Gross
TC – Total Capacity (1000 Btuh) Gross

NOTES:

1. Direct interpolation is permissible. Do not extrapolate.
2. The following formulas may be used:

$$t_{ldb} = t_{edb} - \frac{\text{sensible capacity (Btuh)}}{1.10 \times \text{cfm}}$$

t_{lwb} = Wet–bulb temperature corresponding to enthalpy of air leaving evaporator coil (h_{lwb})

$$h_{lwb} = h_{ewb} - \frac{\text{total capacity (Btuh)}}{4.5 \times \text{cfm}}$$

Where: h_{ewb} = Enthalpy of air entering evaporator coil

Table 32 – COOLING CAPACITIES 2-STAGE COOLING 15 TONS

48TC*D16 (RTPF)				Ambient Temperature											
				85			95			105			115		
				EA (dB)			EA (dB)			EA (dB)			EA (dB)		
				75	80	85	75	80	85	75	80	85	75	80	85
4500 Cfm	EAT (wb)	58	THC	156.6	156.6	175.2	149.4	149.4	169.1	141.6	141.6	160.2	133.3	133.3	150.9
			SHC	134.7	154.9	175.2	129.8	149.4	169.1	123.0	141.6	160.2	115.7	133.3	150.9
		62	THC	166.7	166.7	166.9	158.0	158.0	162.6	147.6	147.6	157.2	136.8	136.8	150.3
			SHC	122.8	144.9	166.9	118.6	140.6	162.6	113.5	135.3	157.2	107.4	128.8	150.3
		67	THC	184.1	184.1	184.1	175.6	175.6	175.6	165.6	165.6	165.6	154.5	154.5	154.5
			SHC	101.6	123.7	145.7	98.1	120.2	142.3	94.0	116.1	138.2	89.4	111.5	133.6
		72	THC	200.3	200.3	200.3	192.0	192.0	192.0	182.9	182.9	182.9	172.2	172.2	172.2
			SHC	78.7	101.1	123.5	75.5	97.9	120.2	72.1	94.4	116.7	68.2	90.5	112.7
		76	THC	-	211.4	211.4	-	203.1	203.1	-	193.8	193.8	-	183.9	183.9
			SHC	-	82.2	107.0	-	79.3	103.8	-	76.0	100.2	-	72.6	96.5
5250 Cfm	EAT (wb)	58	THC	165.2	165.2	186.9	158.2	158.2	179.0	150.0	150.0	169.7	141.3	141.3	160.0
			SHC	143.5	165.2	186.9	137.4	158.2	179.0	130.2	150.0	169.7	122.7	141.3	160.0
		62	THC	172.3	172.3	181.7	163.4	163.4	176.9	153.1	153.1	169.3	143.4	143.4	161.4
			SHC	131.6	156.6	181.7	127.1	152.0	176.9	120.5	144.9	169.3	114.1	137.8	161.4
		67	THC	189.5	189.5	189.5	180.9	180.9	180.9	170.7	170.7	170.7	159.1	159.1	159.1
			SHC	107.2	132.4	157.5	103.8	129.0	154.1	99.9	125.1	150.4	95.3	120.6	145.8
		72	THC	205.0	205.0	205.0	196.5	196.5	196.5	187.1	187.1	187.1	176.4	176.4	176.4
			SHC	80.9	106.1	131.3	77.7	102.9	128.1	74.4	99.5	124.7	70.6	95.8	121.0
		76	THC	-	215.4	215.4	-	206.8	206.8	-	197.1	197.1	-	186.9	186.9
			SHC	-	85.0	113.0	-	82.0	109.8	-	78.8	106.4	-	75.4	102.8
6000 Cfm	EAT (wb)	58	THC	172.7	172.7	195.4	165.5	165.5	187.3	157.1	157.1	177.8	148.1	148.1	167.7
			SHC	150.0	172.7	195.4	143.8	165.5	187.3	136.4	157.1	177.8	128.6	148.1	167.7
		62	THC	176.6	176.6	195.7	168.1	168.1	187.6	158.9	158.9	180.2	148.9	148.9	172.1
			SHC	139.6	167.7	195.7	133.2	160.4	187.6	127.1	153.7	180.2	120.7	146.4	172.1
		67	THC	193.6	193.6	193.6	184.8	184.8	184.8	174.7	174.7	174.7	162.7	162.7	162.7
			SHC	112.3	140.3	168.3	108.9	137.0	165.2	105.2	133.5	161.7	100.7	129.0	157.3
		72	THC	208.4	208.4	208.4	199.6	199.6	199.6	190.2	190.2	190.2	179.5	179.5	179.5
			SHC	82.7	110.5	138.3	79.6	107.3	135.1	76.2	104.0	131.8	72.6	100.6	128.5
		76	THC	-	218.2	218.2	-	209.5	209.5	-	199.5	199.5	-	189.0	189.0
			SHC	-	87.5	118.6	-	84.5	115.2	-	81.1	111.3	-	77.5	107.3
6750 Cfm	EAT (wb)	58	THC	178.8	178.8	202.4	171.6	171.6	194.2	163.1	163.1	184.6	153.8	153.8	174.1
			SHC	155.3	178.8	202.4	149.0	171.6	194.2	141.6	163.1	184.6	133.5	153.8	174.1
		62	THC	181.0	181.0	203.6	173.0	173.0	197.5	163.8	163.8	190.1	153.9	153.9	181.1
			SHC	144.1	173.9	203.6	139.1	168.3	197.5	133.3	161.7	190.1	126.7	153.9	181.1
		67	THC	196.8	196.8	196.8	187.9	187.9	187.9	177.7	177.7	177.7	165.5	165.5	167.9
			SHC	117.0	147.7	178.4	113.7	144.5	175.4	110.1	141.1	172.2	105.6	136.8	167.9
		72	THC	211.0	211.0	211.0	202.2	202.2	202.2	192.5	192.5	192.5	181.8	181.8	181.8
			SHC	84.3	114.5	144.7	81.2	111.5	141.7	77.9	108.1	138.4	74.4	104.9	135.4
		76	THC	-	220.2	220.2	-	211.5	211.5	-	201.3	201.3	-	190.6	190.6
			SHC	-	89.5	122.8	-	86.4	119.4	-	83.0	115.4	-	79.4	111.5
7500 Cfm	EAT (wb)	58	THC	183.9	183.9	208.2	176.6	176.6	199.8	168.2	168.2	190.3	158.6	158.6	179.5
			SHC	159.7	183.9	208.2	153.3	176.6	199.8	146.0	168.2	190.3	137.7	158.6	179.5
		62	THC	185.1	185.1	212.5	177.1	177.1	206.2	168.3	168.3	197.9	158.7	158.7	186.7
			SHC	149.5	181.0	212.5	144.5	175.4	206.2	138.7	168.3	197.9	130.8	158.7	186.7
		67	THC	199.3	199.3	199.3	190.3	190.3	190.3	180.0	180.0	181.7	167.8	167.8	177.8
			SHC	121.3	154.6	187.9	118.1	151.6	185.1	114.4	148.1	181.7	110.1	144.0	177.8
		72	THC	213.0	213.0	213.0	204.1	204.1	204.1	194.2	194.2	194.2	183.5	183.5	183.5
			SHC	85.8	118.2	150.5	82.7	115.2	147.7	79.4	111.9	144.4	76.0	108.8	141.6
		76	THC	-	221.9	221.9	-	213.0	213.0	-	202.7	202.7	-	191.8	191.8
			SHC	-	91.2	126.5	-	88.2	123.1	-	84.7	119.2	-	81.2	115.3

* See Minimum–Maximum Airflow Ratings in Table 6. Do not operate outside these limits.

LEGEND:

– – Do not operate in this region
Cfm – Cubic feet per minute (supply air)
EAT(db) – Entering air temperature (dry bulb)
EAT(wb) – Entering air temperature (wet bulb)
SHC – Sensible heat capacity
TC – Total capacity

48TC*E16 Cooling Capacities, Subcooling Mode										
TEMP (F) AIR ENT CONDENSER (Edb)		AIR ENTERING EVAPORATOR – CFM								
		4500/0.02			6000/0.06			7500/0.05		
		Air Entering Evaporator – Ewb (F)								
		72	67	62	72	67	62	72	67	62
75	TC	204.4	186.3	168.2	218.4	199.6	180.9	229.6	210.4	191.2
	SHC	98.9	118.1	137.2	114.8	133.7	152.6	127.6	146.2	164.9
	kW	11.57	11.22	10.77	11.78	11.45	11.00	12.06	11.64	11.35
85	TC	189.2	171.7	154.1	203.0	184.8	166.7	214.1	195.5	176.9
	SHC	79.5	103.4	127.3	96.5	120.2	144.0	110.2	133.7	157.3
	kW	12.59	12.24	11.81	12.81	12.50	12.03	13.05	12.66	12.47
95	TC	174.0	157.0	140.0	187.6	170.1	152.5	198.6	180.6	162.7
	SHC	60.0	88.7	117.5	78.2	106.8	135.3	92.9	121.3	149.7
	kW	13.68	13.35	12.86	13.91	13.57	13.05	14.15	13.75	13.47
105	TC	158.8	142.3	125.8	172.2	155.3	138.3	183.1	165.7	148.4
	SHC	40.5	74.1	107.7	59.9	93.3	126.7	75.5	108.8	142.0
	kW	14.67	14.41	13.88	14.90	14.55	14.10	15.15	14.73	14.53
115	TC	143.6	127.6	111.7	156.8	140.5	124.1	167.6	150.9	134.2
	SHC	21.0	59.4	97.8	41.6	79.9	118.1	58.1	96.3	134.2
	kW	15.77	15.38	14.88	15.88	15.65	15.10	16.12	15.84	15.54

48TC*E 16 COOLING CAPACITIES, HOT GAS REHEAT MODE										
TEMP (F) AIR ENT CONDENSER Edb)		AIR ENTERING EVAPORATOR – Ewb (F)								
		75 Dry Bulb 62.5 Wet Bulb (50% Relative)			75 Dry Bulb 64 Wet Bulb (56% Relative)			75 Dry Bulb 65.3 Wet Bulb (60% Relative)		
		Air Entering Evaporator – Cfm								
		4500	6000	7500	4500	6000	7500	4500	6000	7500
80	TC	83.75	84.85	88.95	86.65	91.90	92.90	87.90	91.75	96.30
	SHC	37.50	42.80	55.10	30.90	40.40	44.50	24.80	29.30	34.10
	kW	10.50	11.49	11.60	10.56	10.65	11.70	11.60	11.72	11.77
75	TC	85.00	86.00	90.50	88.05	93.60	94.65	89.20	93.45	97.85
	SHC	40.00	45.00	57.30	33.20	42.30	46.90	26.90	31.50	36.30
	kW	10.16	11.15	11.25	10.21	10.31	11.33	11.26	11.35	11.42
70	TC	86.15	87.35	91.50	89.20	94.30	96.10	90.40	94.10	98.95
	SHC	42.10	47.50	59.80	35.50	45.30	49.50	29.50	33.90	38.70
	kW	9.84	10.83	10.94	10.02	10.13	11.03	10.95	11.05	11.12
60	TC	88.90	90.10	94.25	92.00	97.10	98.20	93.20	96.90	101.75
	SHC	46.80	52.30	64.60	40.20	50.10	54.10	34.10	38.60	43.40
	kW	9.37	10.36	10.44	9.42	9.52	10.55	10.45	10.57	10.64
50	TC	91.70	92.80	97.00	94.80	99.90	101.00	96.10	99.70	104.20
	SHC	51.50	57.10	69.40	44.80	54.80	58.90	38.70	43.20	49.00
	kW	9.12	10.09	10.16	9.17	9.28	10.26	10.17	10.26	10.32
40	TC	94.45	95.60	99.80	97.45	102.55	103.70	98.65	102.35	107.00
	SHC	56.30	61.40	73.70	49.70	59.20	63.30	43.60	48.10	52.90
	kW	9.05	10.02	10.10	9.10	9.21	10.18	10.11	10.20	10.26

LEGEND

Edb – Entering Dry–Bulb
Ewb – Entering Wet–Bulb
kW – Compressor Motor Power Input
ldb – Leaving Dry–Bulb
lwb – Leaving Wet–Bulb
SHC – Sensible Heat Capacity (1000 Btuh) Gross
TC – Total Capacity (1000 Btuh) Gross

NOTES:

1. Direct interpolation is permissible. Do not extrapolate.
2. The following formulas may be used:

$$t_{ldb} = t_{edb} - \frac{\text{sensible capacity (Btuh)}}{1.10 \times \text{cfm}}$$

t_{lwb} = Wet–bulb temperature corresponding to enthalpy of air leaving evaporator coil (h_{lwb})

$$h_{lwb} = h_{ewb} - \frac{\text{total capacity (Btuh)}}{4.5 \times \text{cfm}}$$

Where: h_{ewb} = Enthalpy of air entering evaporator coil

Table 34 – STATIC PRESSURE ADDERS (IN. WG) (FACTORY OPTIONS AND/OR ACCESSORIES)

Humidi-MiZer

3–6 TONS									
CFM	1000	1250	1500	1750	2000	2250	2500	2750	3000
3 Tons	0.04	0.052	0.07	–	–	–	–	–	–
4 Tons	–	0.106	0.138	0.172	0.21	–	–	–	–
5 Tons	–	–	0.138	0.172	0.21	0.252	0.30	–	–
6 Tons	–	–	–	0.112	0.125	0.161	0.19	0.22	0.25

7.5–12.5 TONS																
CFM	2250	2500	2750	3000	3250	3500	3750	4000	4250	4500	4750	5000	5250	5500	5750	6000
7.5 Tons	0.12	0.14	0.16	0.19	0.21	0.23	0.26	–	–	–	–	–	–	–	–	–
8.5 Tons	–	0.11	0.12	0.13	0.15	0.17	0.18	0.20	0.22	–	–	–	–	–	–	–
10 Tons	–	–	–	0.13	0.15	0.17	0.18	0.20	0.22	0.24	0.26	0.28	–	–	–	–
12.5 Tons	–	–	–	–	–	0.17	0.18	0.20	0.22	0.24	0.26	0.28	0.31	0.33	0.36	0.39

15 TONS														
CFM	4000	4250	4500	4750	5000	5250	5500	5750	6000	6250	6500	6750	7000	7250
15 Tons	0.06	0.07	0.07	0.08	0.08	0.09	0.10	0.10	0.11	0.12	0.12	0.13	0.14	0.15

ECONOMIZER, BAROMETRIC RELIEF AND PE PERFORMANCE

Vertical Application

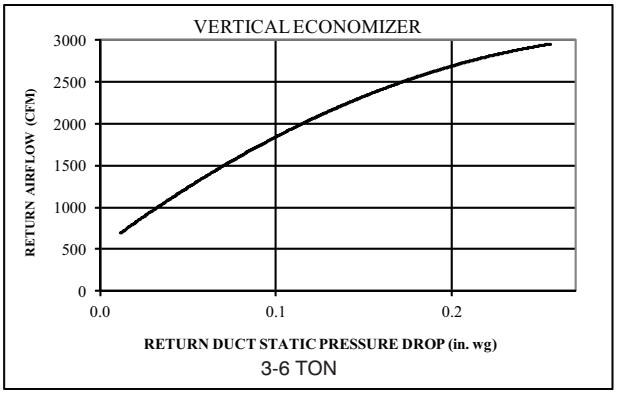

C11238

Fig. 16 - Return Air Pressure Drop

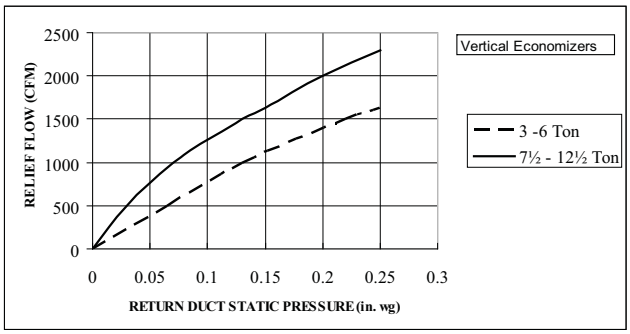

C08073

Fig. 19 - Barometric Relief Flow Capacity

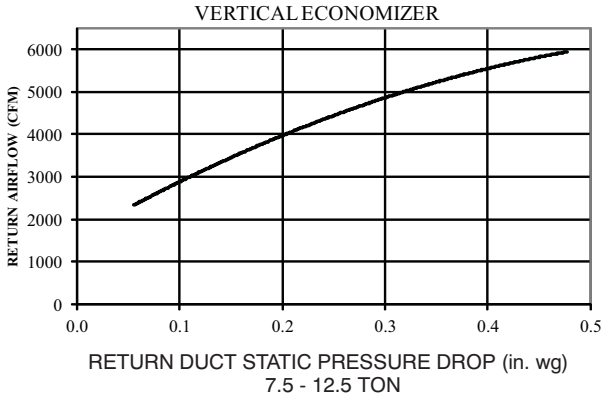

C11240

Fig. 17 - Return Air Pressure Drop

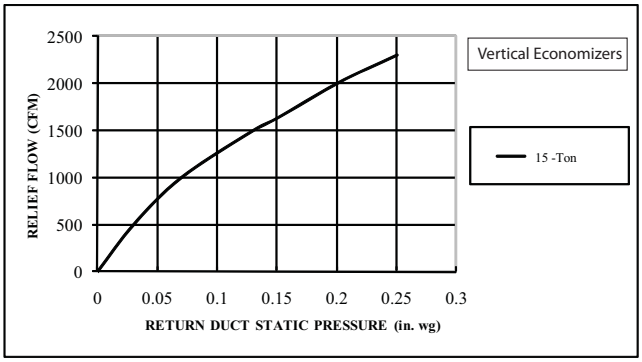

C101122

Fig. 20 - Barometric Relief Flow-Vertical 15 Ton

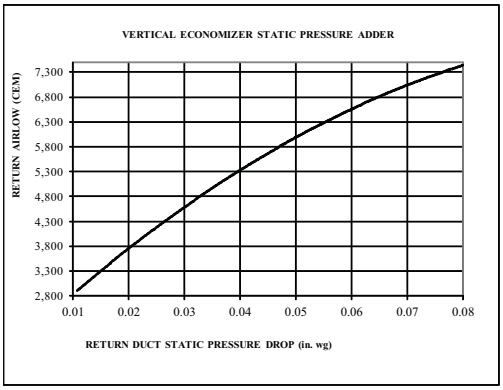

C11257

Fig. 18 - Return Air Pressure Drop-Vertical 15 Tons

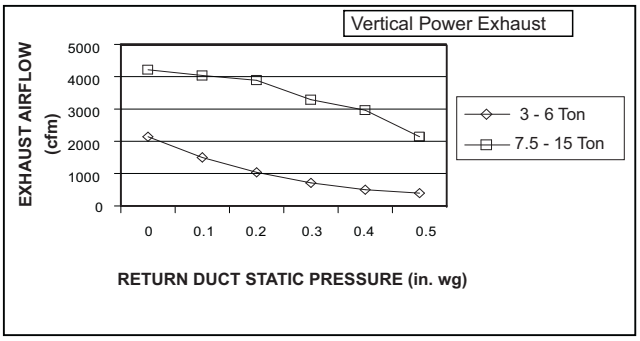

C11248

Fig. 21 - Vertical Power Exhaust Performance

All above data for both standard and ultra low leak models, where available.

Horizontal Application

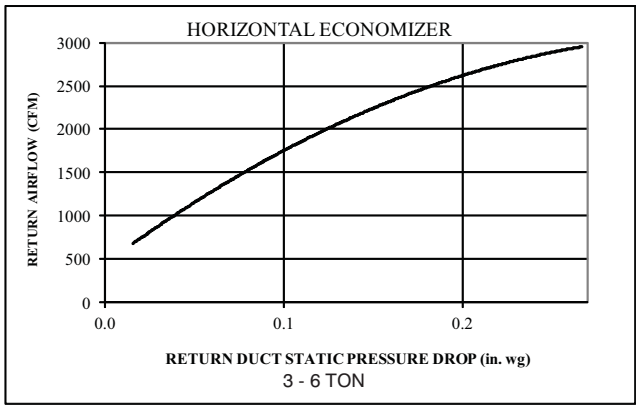

C11239

Fig. 22 - Return Air Pressure Drop

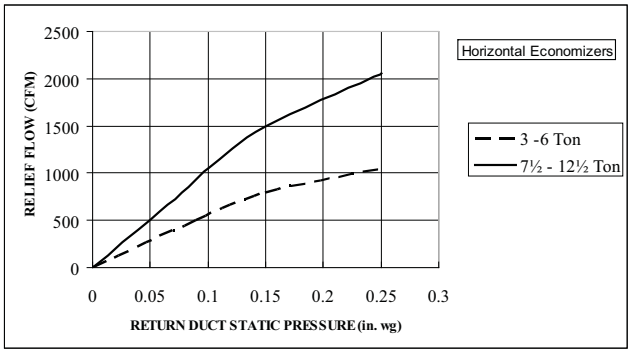

C08070

Fig. 25 - Barometric Relief Flow Capacity

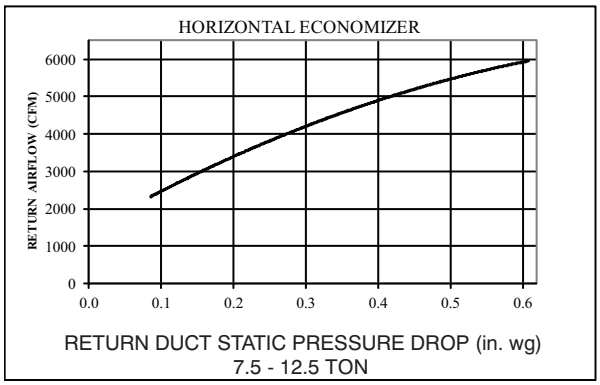

C11241

Fig. 23 - Return Air Pressure Drop

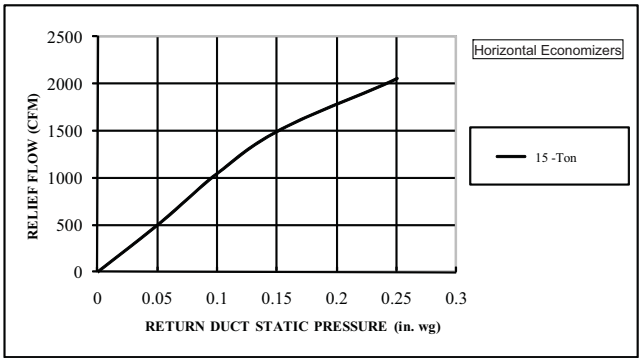

C101120

Fig. 26 - Barometric Relief Flow-Horizontal 15 Ton

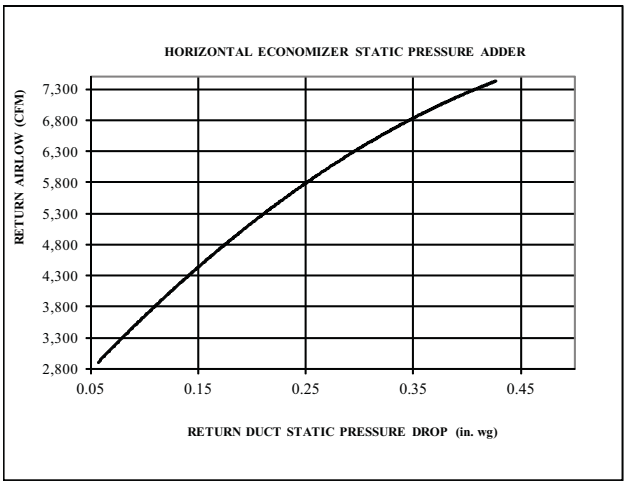

C11258

Fig. 24 - Return Air Pressure Drop-Horizontal 15 Ton

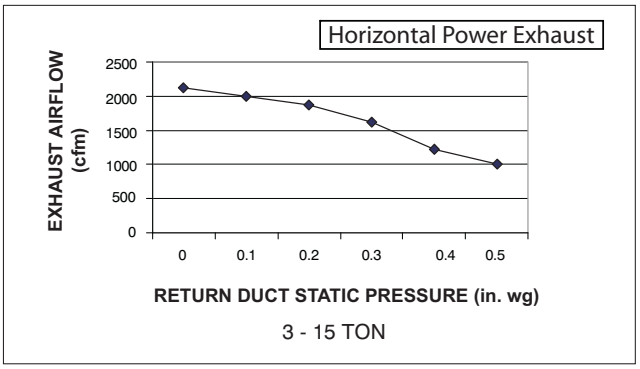

C08012

Fig. 27 - Horizontal Power Exhaust Performance

GENERAL FAN PERFORMANCE NOTES

1. Interpolation is permissible. Do not extrapolate.
2. External static pressure is the static pressure difference between the return duct and the supply duct plus the static pressure caused by any FIOPs or accessories.
3. Tabular data accounts for pressure loss due to clean filters, unit casing, and wet coils. Factory options and accessories may add static pressure losses. Selection software is available, through your salesperson, to help you select the best motor/drive combination for your application.
4. The Fan Performance tables offer motor/drive recommendations. In cases when two motor/drive combinations would work, Carrier recommended the lower horsepower option.
5. For information on the electrical properties of Carrier motors, please see the Electrical information section of this book.
6. For more information on the performance limits of Carrier motors, see the application data section of this book.
7. The EPACT (Energy Policy Act of 1992) regulates energy requirements for specific types of indoor fan motors. Motors regulated by EPACT include any general purpose, T-frame (three-digit, 143 and larger), single-speed, foot mounted, polyphase, squirrel cage induction motors of NEMA (National Electrical Manufacturers Association) design A and B, manufactured for use in the United States. Ranging from 1 to 200 Hp, these continuous-duty motors operate on 230 and 460 volt, 60 Hz power. If a motor does not fit into these specifications, the motor does not have to be replaced by an EPACT compliant energy efficient motor. Variable speed motors are exempt from EPACT compliance requirements. Therefore, the indoor fan motors for Carrier 48TC**04-16 units are exempt from these requirements.

FAN PERFORMANCE

Table 35 – 48TC04** 1 PHASE 3 TON HORIZONTAL SUPPLY

CFM	AVAILABLE EXTERNAL STATIC PRESSURE (in. wg)									
	0.2		0.4		0.6		0.8		1.0	
	RPM	BHP	RPM	BHP	RPM	BHP	RPM	BHP	RPM	BHP
	Field Supplied Drive[1]		Standard Static Option				Medium Static Option			
900	553	0.14	681	0.22	782	0.32	870	0.42	948	0.53
975	575	0.16	700	0.25	801	0.35	888	0.46	965	0.57
1050	597	0.18	720	0.28	820	0.38	906	0.49	983	0.61
1125	620	0.21	741	0.31	839	0.42	925	0.54	1001	0.66
1200	643	0.23	762	0.34	859	0.46	944	0.58	1020	0.71
1275	667	0.27	783	0.38	879	0.50	963	0.63	1038	0.76
1350	691	0.30	805	0.42	900	0.55	983	0.68	1057	0.82
1425	715	0.34	827	0.47	920	0.60	1002	0.74	1076	0.88
1500	740	0.38	849	0.52	941	0.66	1023	0.80	1096	0.95

CFM	AVAILABLE EXTERNAL STATIC PRESSURE (in. wg)									
	1.2		1.4		1.6		1.8		2.0	
	RPM	BHP	RPM	BHP	RPM	BHP	RPM	BHP	RPM	BHP
	Medium Static Option						Field Supplied Drive[2]			
900	1019	0.64	1084	0.76	1146	0.89	**1203**	**1.02**	**1258**	**1.16**
975	1036	0.69	1101	0.81	1162	0.94	**1219**	**1.08**	–	–
1050	1053	0.74	1118	0.86	**1179**	**1.00**	**1236**	**1.14**	–	–
1125	1071	0.79	1135	0.92	**1196**	**1.06**	**1253**	**1.20**	–	–
1200	1089	0.84	1153	0.98	**1213**	**1.12**	–	–	–	–
1275	1107	0.90	1171	1.04	**1231**	**1.19**	–	–	–	–
1350	1126	0.96	**1189**	**1.11**	–	–	–	–	–	–
1425	1144	1.03	**1208**	**1.18**	–	–	–	–	–	–
1500	1163	1.10	–	–	–	–	–	–	–	–

NOTE: For more information, see General Fan Performance Notes.
Boldface indicates field supplied drive is required.

1. Recommend using field supplied fan pulley (part no. KR11AG006) and belt (part no. KR30AE039).
2. Recommend using field supplied motor pulley (part no. KR11HY161) and belt (part no. KR30AE035).

Table 36 – 48TC04** 1 PHASE 3 TON VERTICAL SUPPLY

CFM	AVAILABLE EXTERNAL STATIC PRESSURE (in. wg)									
	0.2		0.4		0.6		0.8		1.0	
	RPM	BHP	RPM	BHP	RPM	BHP	RPM	BHP	RPM	BHP
	Field Supplied Drive[1]		Standard Static Option				Medium Static Option			
900	567	0.15	688	0.22	786	0.30	871	0.37	947	0.44
975	591	0.17	710	0.26	807	0.34	891	0.42	966	0.49
1050	615	0.20	732	0.29	828	0.38	911	0.47	985	0.55
1125	641	0.23	755	0.33	849	0.42	931	0.52	1005	0.61
1200	666	0.26	778	0.37	871	0.47	952	0.57	1025	0.67
1275	693	0.29	802	0.41	893	0.53	974	0.63	1046	0.74
1350	719	0.33	826	0.46	916	0.58	995	0.70	1067	0.81
1425	746	0.38	850	0.51	939	0.64	1017	0.76	1088	0.89
1500	773	0.42	875	0.57	963	0.70	1040	0.84	1110	0.96

CFM	AVAILABLE EXTERNAL STATIC PRESSURE (in. wg)									
	1.2		1.4		1.6		1.8		2.0	
	RPM	BHP	RPM	BHP	RPM	BHP	RPM	BHP	RPM	BHP
	Medium Static Option						Field Supplied Drive[2]			
900	1016	0.51	1080	0.57	1139	0.64	**1195**	**0.71**	**1249**	**0.77**
975	1034	0.57	1098	0.64	1157	0.72	**1213**	**0.79**	**1266**	**0.86**
1050	1053	0.63	1116	0.71	**1176**	**0.79**	**1231**	**0.87**	**1284**	**0.95**
1125	1073	0.70	1135	0.79	**1194**	**0.87**	**1250**	**0.96**	**1302**	**1.04**
1200	1093	0.77	1155	0.87	**1213**	**0.96**	**1268**	**1.05**	**1321**	**1.14**
1275	1113	0.85	1174	0.95	**1232**	**1.05**	**1287**	**1.15**	–	–
1350	1133	0.92	**1194**	**1.03**	**1252**	**1.14**	–	–	–	–
1425	1154	1.01	**1215**	**1.12**	–	–	–	–	–	–
1500	1175	1.09	–	–	–	–	–	–	–	–

NOTE: For more information, see General Fan Performance Notes.
Boldface indicates field supplied drive is required.

1. Recommend using field supplied fan pulley (part no. KR11AG006) and belt (part no. KR30AE039).
2. Recommend using field supplied motor pulley (part no. KR11HY161) and belt (part no. KR30AE035).

FAN PERFORMANCE (cont.)

Table 37 – 48TC04** | **3 PHASE** | **3 TON HORIZONTAL SUPPLY**

CFM	AVAILABLE EXTERNAL STATIC PRESSURE (in. wg)									
	0.2		0.4		0.6		0.8		1.0	
	RPM	BHP	RPM	BHP	RPM	BHP	RPM	BHP	RPM	BHP
	Field Supplied Drive[1]		Standard Static Option				Medium Static Option			
900	553	0.14	681	0.22	782	0.32	870	0.42	948	0.53
975	575	0.16	700	0.25	801	0.35	888	0.46	965	0.57
1050	597	0.18	720	0.28	820	0.38	906	0.49	983	0.61
1125	620	0.21	741	0.31	839	0.42	925	0.54	1001	0.66
1200	643	0.23	762	0.34	859	0.46	944	0.58	1020	0.71
1275	667	0.27	783	0.38	879	0.50	963	0.63	1038	0.76
1350	691	0.30	805	0.42	900	0.55	983	0.68	1057	0.82
1425	715	0.34	827	0.47	920	0.60	1002	0.74	1076	0.88
1500	740	0.38	849	0.52	941	0.66	1023	0.80	1096	0.95

CFM	AVAILABLE EXTERNAL STATIC PRESSURE (in. wg)									
	1.2		1.4		1.6		1.8		2.0	
	RPM	BHP	RPM	BHP	RPM	BHP	RPM	BHP	RPM	BHP
	Medium Static Option						High Static Option			
900	1019	0.64	1084	0.76	1146	0.89	1203	1.02	1258	1.16
975	1036	0.69	1101	0.81	1162	0.94	1219	1.08	1274	1.22
1050	1053	0.74	1118	0.86	1179	1.00	1236	1.14	1290	1.28
1125	1071	0.79	1135	0.92	1196	1.06	1253	1.20	1307	1.35
1200	1089	0.84	1153	0.98	1213	1.12	1270	1.27	1324	1.42
1275	1107	0.90	1171	1.04	1231	1.19	1287	1.34	1341	1.50
1350	1126	0.96	1189	1.11	1249	1.26	1305	1.42	1358	1.58
1425	1144	1.03	1208	1.18	1267	1.34	1323	1.50	1376	1.66
1500	1163	1.10	1226	1.25	1285	1.41	1341	1.58	1394	1.75

NOTE: For more information, see General Fan Performance Notes.

1. Recommend using field supplied drive (part no. KR11AG006) and belt (part no. KR30AE039)

Table 38 – 48TC04** | **3 PHASE** | **3 TON VERTICAL SUPPLY**

CFM	AVAILABLE EXTERNAL STATIC PRESSURE (in. wg)									
	0.2		0.4		0.6		0.8		1.0	
	RPM	BHP	RPM	BHP	RPM	BHP	RPM	BHP	RPM	BHP
	Field Supplied Drive[1]		Standard Static Option				Medium Static Option			
900	567	0.15	688	0.22	786	0.30	871	0.37	947	0.44
975	591	0.17	710	0.26	807	0.34	891	0.42	966	0.49
1050	615	0.20	732	0.29	828	0.38	911	0.47	985	0.55
1125	641	0.23	755	0.33	849	0.42	931	0.52	1005	0.61
1200	666	0.26	778	0.37	871	0.47	952	0.57	1025	0.67
1275	693	0.29	802	0.41	893	0.53	974	0.63	1046	0.74
1350	719	0.33	826	0.46	916	0.58	995	0.70	1067	0.81
1425	746	0.38	850	0.51	939	0.64	1017	0.76	1088	0.89
1500	773	0.42	875	0.57	963	0.70	1040	0.84	1110	0.96

CFM	AVAILABLE EXTERNAL STATIC PRESSURE (in. wg)									
	1.2		1.4		1.6		1.8		2.0	
	RPM	BHP	RPM	BHP	RPM	BHP	RPM	BHP	RPM	BHP
	Medium Static Option						High Static Option			
900	1016	0.51	1080	0.57	1139	0.64	1195	0.71	1249	0.77
975	1034	0.57	1098	0.64	1157	0.72	1213	0.79	1266	0.86
1050	1053	0.63	1116	0.71	1176	0.79	1231	0.87	1284	0.95
1125	1073	0.70	1135	0.79	1194	0.87	1250	0.96	1302	1.04
1200	1093	0.77	1155	0.87	1213	0.96	1268	1.05	1321	1.14
1275	1113	0.85	1174	0.95	1232	1.05	1287	1.15	1339	1.25
1350	1133	0.92	1194	1.03	1252	1.14	1307	1.25	1358	1.35
1425	1154	1.01	1215	1.12	1272	1.24	1326	1.35	1378	1.46
1500	1175	1.09	1235	1.22	1292	1.34	1346	1.46	1397	1.58

NOTE: For more information, see General Fan Performance Notes.

Boldface indicates field supplied drive is required.

1. Recommend using field supplied fan pulley (part no. KR11AG006) and belt (part no. KR30AE039).

FAN PERFORMANCE (cont.)

Table 39 – 48TC05** 1 PHASE 4 TON HORIZONTAL SUPPLY

CFM	AVAILABLE EXTERNAL STATIC PRESSURE (in. wg)									
	0.2		0.4		0.6		0.8		1.0	
	RPM	BHP	RPM	BHP	RPM	BHP	RPM	BHP	RPM	BHP
	Standard Static Option				Medium Static Option					
1200	643	0.23	762	0.34	859	0.46	944	0.58	1020	0.71
1300	675	0.28	790	0.40	886	0.52	969	0.65	1044	0.78
1400	707	0.33	819	0.45	913	0.58	996	0.72	1070	0.86
1500	740	0.38	849	0.52	941	0.66	1023	0.80	1096	0.95
1600	773	0.45	879	0.59	970	0.73	1050	0.88	1123	1.04
1700	807	0.52	910	0.67	999	0.82	1078	0.98	1150	1.14
1800	841	0.59	942	0.75	1029	0.91	1106	1.08	–	–
1900	875	0.68	974	0.85	1059	1.02	1135	1.19	–	–
2000	910	0.77	1006	0.95	1090	1.13	1165	1.31	–	–

CFM	AVAILABLE EXTERNAL STATIC PRESSURE (in. wg)									
	1.2		1.4		1.6		1.8		2.0	
	RPM	BHP	RPM	BHP	RPM	BHP	RPM	BHP	RPM	BHP
	Medium Static Option				Field Supplied Drive[1]					
1200	1089	0.84	1153	0.98	**1213**	**1.12**	–	–	–	–
1300	1113	0.92	**1177**	**1.06**	–	–	–	–	–	–
1400	1138	1.01	**1201**	**1.15**	–	–	–	–	–	–
1500	1163	1.10	–	–	–	–	–	–	–	–
1600	**1189**	**1.20**	–	–	–	–	–	–	–	–
1700	–	–	–	–	–	–	–	–	–	–
1800	–	–	–	–	–	–	–	–	–	–
1900	–	–	–	–	–	–	–	–	–	–
2000	–	–	–	–	–	–	–	–	–	–

NOTE: For more information, see General Fan Performance Notes.
Boldface indicates field supplied drive is required.
1. Recommend using field supplied motor pulley (part no. KR11HY161) and belt (part no. KR30AE035).

Table 40 – 48TC05** 1 PHASE 4 TON VERTICAL SUPPLY

CFM	AVAILABLE EXTERNAL STATIC PRESSURE (in. wg)									
	0.2		0.4		0.6		0.8		1.0	
	RPM	BHP	RPM	BHP	RPM	BHP	RPM	BHP	RPM	BHP
	Standard Static Option				Medium Static Option					
1200	666	0.26	778	0.37	871	0.47	952	0.57	1025	0.67
1300	701	0.31	810	0.43	901	0.54	981	0.65	1053	0.76
1400	737	0.36	842	0.49	931	0.62	1010	0.74	1081	0.86
1500	773	0.42	875	0.57	963	0.70	1040	0.84	1110	0.96
1600	810	0.49	909	0.65	994	0.79	1070	0.94	1140	1.08
1700	847	0.57	943	0.73	1027	0.89	1101	1.05	1170	1.20
1800	885	0.66	978	0.83	1060	1.00	1133	1.16	–	–
1900	923	0.75	1014	0.94	1093	1.11	1165	1.29	–	–
2000	962	0.85	1049	1.05	–	–	–	–	–	–

CFM	AVAILABLE EXTERNAL STATIC PRESSURE (in. wg)									
	1.2		1.4		1.6		1.8		2.0	
	RPM	BHP	RPM	BHP	RPM	BHP	RPM	BHP	RPM	BHP
	Medium Static Option				Field Supplied Drive[1]					
1200	1093	0.77	1155	0.87	**1213**	**0.96**	**1268**	**1.05**	**1321**	**1.14**
1300	1119	0.87	**1181**	**0.98**	**1239**	**1.08**	**1294**	**1.18**	–	–
1400	1147	0.98	**1208**	**1.09**	–	–	–	–	–	–
1500	1175	1.09	–	–	–	–	–	–	–	–
1600	–	–	–	–	–	–	–	–	–	–
1700	–	–	–	–	–	–	–	–	–	–
1800	–	–	–	–	–	–	–	–	–	–
1900	–	–	–	–	–	–	–	–	–	–
2000	–	–	–	–	–	–	–	–	–	–

NOTE: For more information, see General Fan Performance Notes.
Boldface indicates field supplied drive is required.
1. Recommend using field supplied motor pulley (part no. KR11HY161) and belt (part no. KR30AE035).

FAN PERFORMANCE (cont.)

Table 41 – 48TC05** | **3 PHASE** | **4 TON HORIZONTAL SUPPLY**

CFM	AVAILABLE EXTERNAL STATIC PRESSURE (in. wg)									
	0.2		0.4		0.6		0.8		1.0	
	RPM	BHP	RPM	BHP	RPM	BHP	RPM	BHP	RPM	BHP
	Standard Static Option				Medium Static Option					
1200	643	0.23	762	0.34	859	0.46	944	0.58	1020	0.71
1300	675	0.28	790	0.40	886	0.52	969	0.65	1044	0.78
1400	707	0.33	819	0.45	913	0.58	996	0.72	1070	0.86
1500	740	0.38	849	0.52	941	0.66	1023	0.80	1096	0.95
1600	773	0.45	879	0.59	970	0.73	1050	0.88	1123	1.04
1700	807	0.52	910	0.67	999	0.82	1078	0.98	1150	1.14
1800	841	0.59	942	0.75	1029	0.91	1106	1.08	1177	1.25
1900	875	0.68	974	0.85	1059	1.02	1135	1.19	1205	1.37
2000	910	0.77	1006	0.95	1090	1.13	1165	1.31	1234	1.49

CFM	AVAILABLE EXTERNAL STATIC PRESSURE (in. wg)									
	1.2		1.4		1.6		1.8		2.0	
	RPM	BHP	RPM	BHP	RPM	BHP	RPM	BHP	RPM	BHP
	Medium Static Option				High Static Option					
1200	1089	0.84	1153	0.98	1213	1.12	1270	1.27	1324	1.42
1300	1113	0.92	1177	1.06	1237	1.21	1293	1.36	1347	1.52
1400	1138	1.01	1201	1.15	1261	1.31	1317	1.47	1370	1.63
1500	1163	1.10	1226	1.25	1285	1.41	1341	1.58	1394	1.75
1600	1189	1.20	1252	1.36	1310	1.53	1365	1.70	1418	1.87
1700	1216	1.31	1277	1.48	1335	1.65	1390	1.83	1442	2.01
1800	1242	1.42	1303	1.60	1361	1.78	1415	1.96	**1467**	**2.15**
1900	1270	1.55	1330	1.73	1387	1.92	1441	2.11	**1493**	**2.30**
2000	1297	1.68	1357	1.87	1414	2.07	**1467**	**2.26**	–	–

NOTE: For more information, see General Fan Performance Notes.
Boldface indicates field supplied drive is required.
1. Recommend using field supplied fan pulley (part no. KR11AZ506), motor pulley (part no. KR11HY181) and belt (part no. KR30AE041).

Table 42 – 48TC05** | **3 PHASE** | **4 TON VERTICAL SUPPLY**

CFM	AVAILABLE EXTERNAL STATIC PRESSURE (in. wg)									
	0.2		0.4		0.6		0.8		1.0	
	RPM	BHP	RPM	BHP	RPM	BHP	RPM	BHP	RPM	BHP
	Standard Static Option				Medium Static Option					
1200	666	0.26	778	0.37	871	0.47	952	0.57	1025	0.67
1300	701	0.31	810	0.43	901	0.54	981	0.65	1053	0.76
1400	737	0.36	842	0.49	931	0.62	1010	0.74	1081	0.86
1500	773	0.42	875	0.57	963	0.70	1040	0.84	1110	0.96
1600	810	0.49	909	0.65	994	0.79	1070	0.94	1140	1.08
1700	847	0.57	943	0.73	1027	0.89	1101	1.05	1170	1.20
1800	885	0.66	978	0.83	1060	1.00	1133	1.16	1200	1.32
1900	923	0.75	1014	0.94	1093	1.11	1165	1.29	1231	1.46
2000	962	0.85	1049	1.05	1127	1.24	1198	1.42	1263	1.61

CFM	AVAILABLE EXTERNAL STATIC PRESSURE (in. wg)									
	1.2		1.4		1.6		1.8		2.0	
	RPM	BHP	RPM	BHP	RPM	BHP	RPM	BHP	RPM	BHP
	Medium Static Option				High Static Option					
1200	1093	0.77	1155	0.87	1213	0.96	1268	1.05	1321	1.14
1300	1119	0.87	1181	0.98	1239	1.08	1294	1.18	1346	1.28
1400	1147	0.98	1208	1.09	1265	1.21	1320	1.32	1371	1.43
1500	1175	1.09	1235	1.22	1292	1.34	1346	1.46	1397	1.58
1600	1204	1.21	1263	1.35	1320	1.48	1373	1.61	1424	1.74
1700	1233	1.34	1292	1.49	1348	1.63	1401	1.77	1451	1.91
1800	1262	1.48	1321	1.64	1376	1.79	1428	1.94	**1479**	**2.09**
1900	1293	1.63	1350	1.79	1405	1.96	1457	2.12	**1506**	**2.28**
2000	1323	1.79	1380	1.96	1434	2.13	**1486**	**2.31**	–	–

NOTE: For more information, see General Fan Performance Notes.
Boldface indicates field supplied drive is required.
1. Recommend using field supplied fan pulley (part no. KR11AZ506), motor pulley (part no. KR11HY181) and belt (part no. KR30AE041).

FAN PERFORMANCE (cont.)

Table 43 – 48TC06** | **1 PHASE** | **5 TON HORIZONTAL SUPPLY**

CFM	AVAILABLE EXTERNAL STATIC PRESSURE (in. wg)									
	0.2		0.4		0.6		0.8		1.0	
	RPM	BHP	RPM	BHP	RPM	BHP	RPM	BHP	RPM	BHP
	Standard Static Option									
1500	800	0.39	904	0.49	999	0.60	1087	0.72	1169	0.85
1625	849	0.48	947	0.59	1038	0.70	1122	0.83	1201	0.96
1750	899	0.59	992	0.70	1078	0.82	1159	0.95	1235	1.08
1875	950	0.70	1038	0.82	1120	0.95	1198	1.08	1271	1.22
2000	1001	0.84	1085	0.96	1163	1.09	1238	1.23	1309	1.38
2125	1053	0.99	1133	1.12	1208	1.26	1280	1.40	–	–
2250	1106	1.16	1182	1.29	1254	1.44	–	–	–	–
2375	1159	1.34	1231	1.49	–	–	–	–	–	–
2500	–	–	–	–	–	–	–	–	–	–

CFM	AVAILABLE EXTERNAL STATIC PRESSURE (in. wg)									
	1.2		1.4		1.6		1.8		2.0	
	RPM	BHP	RPM	BHP	RPM	BHP	RPM	BHP	RPM	BHP
	Medium Static Option									
1500	1247	0.98	1320	1.13	1390	1.28	1457	1.44	–	–
1625	1276	1.10	1348	1.24	1416	1.40	–	–	–	–
1750	1308	1.22	1377	1.38	–	–	–	–	–	–
1875	1342	1.37	–	–	–	–	–	–	–	–
2000	–	–	–	–	–	–	–	–	–	–
2125	–	–	–	–	–	–	–	–	–	–
2250	–	–	–	–	–	–	–	–	–	–
2375	–	–	–	–	–	–	–	–	–	–
2500	–	–	–	–	–	–	–	–	–	–

NOTE: For more information, see General Fan Performance Notes.

Table 44 – 48TC06** | **1 PHASE** | **5 TON VERTICAL SUPPLY**

CFM	AVAILABLE EXTERNAL STATIC PRESSURE (in. wg)									
	0.2		0.4		0.6		0.8		1.0	
	RPM	BHP	RPM	BHP	RPM	BHP	RPM	BHP	RPM	BHP
	Standard Static Option								Medium Static Option	
1500	848	0.42	968	0.55	1069	0.68	1158	0.80	1238	0.94
1625	897	0.51	1013	0.65	1111	0.79	1198	0.93	1277	1.07
1750	947	0.61	1059	0.76	1155	0.91	1240	1.06	1318	1.21
1875	997	0.72	1105	0.89	1199	1.05	1283	1.21	1359	1.37
2000	1048	0.85	1153	1.03	1244	1.20	1326	1.37	–	–
2125	1100	1.00	1201	1.19	1290	1.37	–	–	–	–
2250	1152	1.16	1250	1.36	–	–	–	–	–	–
2375	1205	1.34	–	–	–	–	–	–	–	–
2500	–	–	–	–	–	–	–	–	–	–

CFM	AVAILABLE EXTERNAL STATIC PRESSURE (in. wg)									
	1.2		1.4		1.6		1.8		2.0	
	RPM	BHP	RPM	BHP	RPM	BHP	RPM	BHP	RPM	BHP
	Medium Static Option						Field–Supplied Drive[1]			
1500	1312	1.07	1380	1.20	1445	1.34	**1506**	**1.48**	–	–
1625	1350	1.21	1418	1.35	**1482**	**1.50**	–	–	–	–
1750	1390	1.36	–	–	–	–	–	–	–	–
1875	–	–	–	–	–	–	–	–	–	–
2000	–	–	–	–	–	–	–	–	–	–
2125	–	–	–	–	–	–	–	–	–	–
2250	–	–	–	–	–	–	–	–	–	–
2375	–	–	–	–	–	–	–	–	–	–
2500	–	–	–	–	–	–	–	–	–	–

NOTE: For more information, see General Fan Performance Notes.
Boldface indicates field supplied drive is required.

1. Recommend using field supplied motor pulley (part no. KR11HY171) and belt (part no. KR30AE039).

Table 45 – 48TC06** 3 PHASE 5 TON HORIZONTAL SUPPLY

CFM	AVAILABLE EXTERNAL STATIC PRESSURE (in. wg)									
	0.2		0.4		0.6		0.8		1.0	
	RPM	BHP	RPM	BHP	RPM	BHP	RPM	BHP	RPM	BHP
	Standard Static Option									
1500	800	0.39	904	0.49	999	0.60	1087	0.72	1169	0.85
1625	849	0.48	947	0.59	1038	0.70	1122	0.83	1201	0.96
1750	899	0.59	992	0.70	1078	0.82	1159	0.95	1235	1.08
1875	950	0.70	1038	0.82	1120	0.95	1198	1.08	1271	1.22
2000	1001	0.84	1085	0.96	1163	1.09	1238	1.23	1309	1.38
2125	1053	0.99	1133	1.12	1208	1.26	1280	1.40	1348	1.55
2250	1106	1.16	1182	1.29	1254	1.44	1323	1.59	1389	1.74
2375	1159	1.34	1231	1.49	1300	1.64	1367	1.80	1430	1.96
2500	1212	1.55	1281	1.70	1348	1.86	1412	2.02	1473	2.19

CFM	AVAILABLE EXTERNAL STATIC PRESSURE (in. wg)									
	1.2		1.4		1.6		1.8		2.0	
	RPM	BHP	RPM	BHP	RPM	BHP	RPM	BHP	RPM	BHP
	Medium Static Option								High Static Option	
1500	1247	0.98	1320	1.13	1390	1.28	1457	1.44	1522	1.61
1625	1276	1.10	1348	1.24	1416	1.40	1481	1.56	1544	1.73
1750	1308	1.22	1377	1.38	1444	1.53	1507	1.70	1569	1.87
1875	1342	1.37	1409	1.52	1473	1.69	1536	1.86	1596	2.03
2000	1377	1.53	1442	1.69	1505	1.86	1565	2.03	1624	2.21
2125	1414	1.71	1477	1.87	1538	2.04	1597	2.22	1654	2.40
2250	1452	1.91	1514	2.08	1573	2.25	1630	2.43	1686	2.62
2375	1492	2.12	1551	2.30	1609	2.48	1665	2.66	**1719**	**2.85**
2500	1533	2.36	1591	2.54	1647	2.73	–	–	–	–

NOTE: For more information, see General Fan Performance Notes.
Boldface indicates field supplied drive is required.
1. Recommend using field supplied fan pulley (part no. KR11AZ506), motor pulley (part no. KR11HY191) and belt (part no. KR30AE042).

Table 46 – 48TC06** 3 PHASE 5 TON VERTICAL SUPPLY

CFM	AVAILABLE EXTERNAL STATIC PRESSURE (in. wg)									
	0.2		0.4		0.6		0.8		1.0	
	RPM	BHP	RPM	BHP	RPM	BHP	RPM	BHP	RPM	BHP
	Standard Static Option						Medium Static Option			
1500	848	0.42	968	0.55	1069	0.68	1158	0.80	1238	0.94
1625	897	0.51	1013	0.65	1111	0.79	1198	0.93	1277	1.07
1750	947	0.61	1059	0.76	1155	0.91	1240	1.06	1318	1.21
1875	997	0.72	1105	0.89	1199	1.05	1283	1.21	1359	1.37
2000	1048	0.85	1153	1.03	1244	1.20	1326	1.37	1401	1.54
2125	1100	1.00	1201	1.19	1290	1.37	1370	1.55	1444	1.73
2250	1152	1.16	1250	1.36	1336	1.55	1415	1.75	1487	1.94
2375	1205	1.34	1299	1.55	1384	1.76	1460	1.96	1532	2.17
2500	1258	1.54	1349	1.76	1431	1.98	1506	2.20	1576	2.41

CFM	AVAILABLE EXTERNAL STATIC PRESSURE (in. wg)									
	1.2		1.4		1.6		1.8		2.0	
	RPM	BHP	RPM	BHP	RPM	BHP	RPM	BHP	RPM	BHP
	Medium Static Option						High Static Option			
1500	1312	1.07	1380	1.20	1445	1.34	1506	1.48	1564	1.62
1625	1350	1.21	1418	1.35	1482	1.50	1542	1.64	1600	1.79
1750	1390	1.36	1457	1.51	1520	1.67	1580	1.83	1637	1.98
1875	1430	1.53	1496	1.69	1559	1.86	1618	2.02	1675	2.19
2000	1471	1.72	1536	1.89	1598	2.06	1657	2.24	**1713**	**2.41**
2125	1513	1.92	1577	2.10	1638	2.28	**1696**	**2.47**	**1752**	**2.65**
2250	1555	2.13	1619	2.33	1679	2.52	**1736**	**2.72**	1791	2.91
2375	1598	2.37	1661	2.57	**1720**	**2.78**	–	–	–	–
2500	1642	2.63	**1704**	**2.84**	–	–	–	–	–	–

NOTE: For more information, see General Fan Performance Notes.
Boldface indicates field supplied drive is required.
1. Recommend using field supplied fan pulley (part no. KR11AZ506), motor pulley (part no. KR11HY191) and belt (part no. KR30AE042).

FAN PERFORMANCE (cont.)

Table 47 – 48TC07** | **3 PHASE** | **6 TON HORIZONTAL SUPPLY**

CFM	AVAILABLE EXTERNAL STATIC PRESSURE (in. wg)									
	0.2		0.4		0.6		0.8		1.0	
	RPM	BHP	RPM	BHP	RPM	BHP	RPM	BHP	RPM	BHP
	Field Supplied Drive[1]		Standard Static Option							
1800	913	0.64	1010	0.80	1098	0.98	1178	1.16	1252	1.35
1950	972	0.78	1065	0.96	1148	1.14	1226	1.34	1298	1.54
2100	1032	0.95	1120	1.14	1200	1.33	1275	1.54	1345	1.75
2250	1093	1.14	1177	1.34	1254	1.55	1325	1.76	1393	1.98
2400	1155	1.36	1234	1.57	1308	1.78	1377	2.01	1443	2.24
2550	1217	1.60	1293	1.82	1363	2.05	1430	2.28	1494	2.53
2700	1280	1.87	1352	2.10	1420	2.34	1484	2.59	1546	2.84
2850	1343	2.17	1412	2.42	1477	2.67	1539	2.93	1599	3.19
3000	1406	2.50	1472	2.76	1535	3.03	1595	3.29	1653	3.57

CFM	AVAILABLE EXTERNAL STATIC PRESSURE (in. wg)									
	1.2		1.4		1.6		1.8		2.0	
	RPM	BHP	RPM	BHP	RPM	BHP	RPM	BHP	RPM	BHP
	Standard Static Option				Medium Static Option				High Static Option	
1800	1322	1.56	1388	1.77	1451	1.98	1510	2.21	1568	2.44
1950	1366	1.75	1430	1.97	1491	2.20	1550	2.43	1606	2.67
2100	1411	1.97	1473	2.20	1533	2.43	1590	2.67	1645	2.92
2250	1457	2.21	1518	2.45	1576	2.69	1632	2.94	1686	3.20
2400	1505	2.48	1564	2.73	1621	2.98	1676	3.24	1729	3.51
2550	1554	2.78	1612	3.03	1667	3.30	1721	3.57	–	–
2700	1604	3.10	1660	3.37	1715	3.64	–	–	–	–
2850	1656	3.46	1710	3.74	–	–	–	–	–	–
3000	–	–	–	–	–	–	–	–	–	–

NOTE: For more information, see General Fan Performance Notes.
Boldface indicates field–supplied drive is required.
1. Recommend using field–supplied fan pulley (part no. KR11AZ406), motor pulley (part no. KR11HY151) and belt (part no. KR29AF035).

Table 48 – 48TC07** | **3 PHASE** | **6 TON VERTICAL SUPPLY**

CFM	AVAILABLE EXTERNAL STATIC PRESSURE (in. wg)									
	0.2		0.4		0.6		0.8		1.0	
	RPM	BHP	RPM	BHP	RPM	BHP	RPM	BHP	RPM	BHP
	Field–Supplied Drive[1]		Standard Static Option							
1800	967	0.63	1075	0.80	1170	0.97	1255	1.13	1333	1.28
1950	1029	0.77	1132	0.96	1223	1.14	1306	1.32	1382	1.49
2100	1091	0.93	1189	1.14	1278	1.33	1358	1.52	1433	1.71
2250	1154	1.11	1248	1.33	1333	1.55	1411	1.75	1484	1.96
2400	1218	1.32	1308	1.55	1390	1.78	1466	2.01	1537	2.23
2550	1283	1.55	1369	1.80	1448	2.05	1521	2.29	1590	2.52
2700	1348	1.80	1431	2.07	1507	2.33	1578	2.59	1645	2.84
2850	1414	2.09	1493	2.37	1566	2.65	1636	2.92	1701	3.19
3000	1479	2.40	1556	2.70	1627	3.00	1694	3.29	1757	3.57

CFM	AVAILABLE EXTERNAL STATIC PRESSURE (in. wg)									
	1.2		1.4		1.6		1.8		2.0	
	RPM	BHP	RPM	BHP	RPM	BHP	RPM	BHP	RPM	BHP
	Medium Static Option				High Static Option					
1800	1406	1.43	1475	1.58	1540	1.72	1601	1.87	1660	2.00
1950	1454	1.65	1521	1.82	1585	1.98	1645	2.13	1703	2.29
2100	1502	1.89	1568	2.07	1631	2.25	1690	2.42	1747	2.59
2250	1552	2.15	1617	2.35	1678	2.54	1737	2.73		
2400	1603	2.44	1666	2.65	1727	2.86	1784	3.06		
2550	1655	2.75	1717	2.98	1776	3.20				
2700	1709	3.09	1769	3.33	1827	3.57	–	–	–	–
2850	1763	3.45	–	–	–	–	–	–	–	–
3000	–	–	–	–	–	–	–	–	–	–

NOTE: For more information, see General Fan Performance Notes.
Boldface indicates field supplied drive is required.
1. Recommend using field supplied fan pulley (part no. KR11AZ406), motor pulley (part no. KR11HY151) and belt (part no. KR29AF035).
2. Recommend using field supplied fan pulley (part no. KR11AZ506), motor pulley (part no. KR11HY191) and belt (part no. KR29AF042).

Table 49 – 48TC08** 3 PHASE 7.5 TON HORIZONTAL SUPPLY

CFM	AVAILABLE EXTERNAL STATIC PRESSURE (in. wg)									
	0.2		0.4		0.6		0.8		1.0	
	RPM	BHP	RPM	BHP	RPM	BHP	RPM	BHP	RPM	BHP
	Standard Static Option								Medium Static Option	
2250	505	0.52	586	0.73	657	0.97	722	1.22	782	1.50
2438	533	0.62	610	0.85	679	1.09	742	1.36	800	1.65
2625	562	0.74	635	0.98	701	1.23	762	1.51	819	1.81
2813	591	0.88	661	1.13	725	1.39	783	1.68	839	1.98
3000	621	1.03	688	1.29	749	1.57	806	1.87	859	2.18
3188	652	1.21	715	1.48	774	1.77	829	2.07	881	2.40
3375	682	1.40	743	1.68	800	1.98	853	2.30	903	2.63
3563	713	1.61	772	1.91	826	2.22	878	2.55	927	2.89
3750	745	1.85	801	2.15	853	2.48	903	2.82	951	3.18

CFM	AVAILABLE EXTERNAL STATIC PRESSURE (in. wg)									
	1.2		1.4		1.6		1.8		2.0	
	RPM	BHP	RPM	BHP	RPM	BHP	RPM	BHP	RPM	BHP
	Medium Static Option						High Static Option			
2250	838	1.81	891	2.12	941	2.46	988	2.82	1033	3.19
2438	854	1.96	906	2.28	955	2.63	1001	2.99	1046	3.37
2625	872	2.12	922	2.46	970	2.81	1016	3.17	1060	3.56
2813	890	2.31	940	2.65	986	3.01	1031	3.38	1074	3.77
3000	910	2.51	958	2.86	1004	3.23	1048	3.61	1090	4.01
3188	930	2.74	977	3.10	1022	3.47	1065	3.86	**1107**	**4.26**[1]
3375	951	2.99	997	3.35	1041	3.74	1083	4.13	**1124**	**4.54**
3563	973	3.26	1018	3.63	1061	4.02	1103	4.43	**–**	–
3750	996	3.55	1040	3.93	1082	4.34	–	–	–	**–**

NOTE: For more information, see General Fan Performance Notes.
Boldface indicates field supplied drive is required.
1. Recommend using field supplied fan pulley (part no. KR11AZ002) and belt (part no. KR29AF054).

Table 50 – 48TC08** 3 PHASE 7.5 TON VERTICAL SUPPLY

CFM	AVAILABLE EXTERNAL STATIC PRESSURE (in. wg)									
	0.2		0.4		0.6		0.8		1.0	
	RPM	BHP	RPM	BHP	RPM	BHP	RPM	BHP	RPM	BHP
	Standard Static Option								Medium Static Option	
2250	513	0.54	595	0.76	665	1.01	728	1.27	786	1.56
2438	541	0.65	620	0.89	688	1.14	750	1.42	806	1.71
2625	570	0.77	645	1.02	712	1.29	772	1.58	827	1.88
2813	600	0.91	672	1.18	736	1.46	794	1.76	848	2.07
3000	629	1.07	699	1.35	761	1.64	818	1.95	871	2.28
3188	660	1.25	726	1.54	787	1.85	842	2.17	894	2.51
3375	690	1.45	754	1.75	813	2.07	867	2.41	917	2.76
3563	721	1.67	783	1.98	840	2.32	892	2.67	941	3.03
3750	752	1.91	812	2.24	867	2.59	918	2.95	966	3.32

CFM	AVAILABLE EXTERNAL STATIC PRESSURE (in. wg)									
	1.2		1.4		1.6		1.8		2.0	
	RPM	BHP	RPM	BHP	RPM	BHP	RPM	BHP	RPM	BHP
	Medium Static Option						High Static Option			
2250	839	1.86	889	2.18	935	2.52	980	2.87	1022	3.23
2438	858	2.02	907	2.35	953	2.70	997	3.06	1039	3.43
2625	878	2.20	926	2.54	972	2.89	1015	3.26	1056	3.64
2813	899	2.40	946	2.75	991	3.11	1033	3.49	1074	3.88
3000	920	2.62	966	2.98	1010	3.35	1052	3.74	1093	4.14
3188	942	2.86	987	3.23	1031	3.61	1072	4.01	**1112**	**4.42**[1]
3375	964	3.12	1009	3.50	1052	3.89	1093	4.30	–	–
3563	988	3.41	1032	3.80	1074	4.20	**1114**	**4.61**	–	–
3750	1011	3.71	1054	4.11	1096	4.53	–	–	–	–

NOTE: For more information, see General Fan Performance Notes.
Boldface indicates field–supplied drive is required.
1. Recommend using field–supplied fan pulley (part no. KR11AZ002) and belt (part no. KR29AF054).

FAN PERFORMANCE (cont.)

Table 51 – 48TC09** 3 PHASE 8.5 TON HORIZONTAL SUPPLY

CFM	AVAILABLE EXTERNAL STATIC PRESSURE (in. wg)									
	0.2		0.4		0.6		0.8		1.0	
	RPM	BHP	RPM	BHP	RPM	BHP	RPM	BHP	RPM	BHP
	Field–Supplied Drive[1]		Standard Static Option						Medium Static Option	
2550	497	0.48	579	0.61	651	0.75	717	0.90	777	1.05
2763	524	0.58	602	0.72	671	0.87	735	1.03	794	1.19
2975	551	0.70	626	0.86	693	1.01	754	1.18	812	1.35
3188	580	0.84	651	1.00	716	1.17	775	1.34	831	1.52
3400	609	1.00	677	1.17	739	1.35	797	1.53	851	1.71
3613	638	1.17	703	1.35	763	1.54	819	1.73	871	1.93
3825	668	1.37	730	1.56	788	1.76	842	1.96	893	2.16
4038	698	1.59	758	1.79	813	2.00	866	2.20	915	2.42
4250	728	1.83	786	2.04	839	2.26	890	2.47	938	2.70

CFM	AVAILABLE EXTERNAL STATIC PRESSURE (in. wg)									
	1.2		1.4		1.6		1.8		2.0	
	RPM	BHP	RPM	BHP	RPM	BHP	RPM	BHP	RPM	BHP
	Medium Static Option						High Static Option			
2550	833	1.21	886	1.38	936	1.56	984	1.74	1029	1.93
2763	849	1.36	900	1.53	950	1.72	996	1.90	1041	2.10
2975	865	1.52	916	1.70	964	1.89	1010	2.09	1054	2.29
3188	883	1.70	933	1.89	980	2.09	1025	2.29	1068	2.50
3400	902	1.90	950	2.10	996	2.30	1041	2.51	1083	2.73
3613	921	2.13	969	2.33	1014	2.54	1057	2.76	**1099**	**2.98[2]**
3825	941	2.37	988	2.58	1032	2.80	1075	3.02	**1116**	**3.25**
4038	963	2.63	1008	2.86	1051	3.08	**1093**	**3.31**	**1133**	**3.55**
4250	984	2.92	1029	3.15	1071	3.39	**1112**	**3.63**	**–**	**–**

NOTE: For more information, see General Fan Performance Notes.
Boldface indicates field–supplied drive is required.

1. Recommend using field–supplied fan pulley (part no. KR11AK012) and belt (part no. KR29AF055).
2. Recommend using field–supplied motor pulley (part no. KR11HY310), fan pulley (part no. KR11AZ002) and belt (part no. KR29AF054).

Table 52 – 48TC09** 3 PHASE 8.5 TON VERTICAL SUPPLY

CFM	AVAILABLE EXTERNAL STATIC PRESSURE (in. wg)									
	0.2		0.4		0.6		0.8		1.0	
	RPM	BHP	RPM	BHP	RPM	BHP	RPM	BHP	RPM	BHP
	Standard Static Option								Medium Static Option	
2550	526	0.51	600	0.65	666	0.79	727	0.93	783	1.07
2763	557	0.62	627	0.77	690	0.92	749	1.08	804	1.23
2975	588	0.75	655	0.91	716	1.08	772	1.24	825	1.40
3188	621	0.90	684	1.07	743	1.25	797	1.42	848	1.60
3400	653	1.06	714	1.25	770	1.44	822	1.62	872	1.81
3613	687	1.25	744	1.45	798	1.65	849	1.84	897	2.04
3825	720	1.45	775	1.67	827	1.88	876	2.09	922	2.30
4038	754	1.69	807	1.91	856	2.13	904	2.35	949	2.57
4250	788	1.94	839	2.17	886	2.41	932	2.64	976	2.88

CFM	AVAILABLE EXTERNAL STATIC PRESSURE (in. wg)									
	1.2		1.4		1.6		1.8		2.0	
	RPM	BHP	RPM	BHP	RPM	BHP	RPM	BHP	RPM	BHP
	Medium Static Option						High Static Option			
2550	836	1.20	886	1.34	934	1.48	979	1.61	1022	1.74
2763	855	1.37	904	1.52	950	1.67	995	1.82	1037	1.97
2975	875	1.56	923	1.72	968	1.88	1012	2.04	1053	2.20
3188	897	1.77	943	1.94	987	2.11	1030	2.29	1071	2.46
3400	919	1.99	964	2.18	1007	2.36	1049	2.55	**1089**	**2.73[1]**
3613	943	2.24	986	2.44	1029	2.63	1069	2.83	**1108**	**3.02**
3825	967	2.51	1010	2.71	1051	2.92	**1090**	**3.13**	**1129**	**3.34**
4038	992	2.80	1034	3.02	1074	3.24	**1112**	**3.46**	**1150**	**3.68**
4250	1018	3.11	1058	3.34	**1097**	**3.57**	**–**	**–**	**–**	**–**

NOTE: For more information, see General Fan Performance Notes.
Boldface indicates field supplied drive is required.

1. Recommend using field supplied motor pulley (part no. KR11HY310), fan pulley (part no. KR11AZ002) and belt (part no. KR29AF054).

FAN PERFORMANCE (cont.)

Table 53 – 48TC12** | **3 PHASE** | **10 TON HORIZONTAL SUPPLY**

CFM	AVAILABLE EXTERNAL STATIC PRESSURE (in. wg)									
	0.2		0.4		0.6		0.8		1.0	
	RPM	BHP	RPM	BHP	RPM	BHP	RPM	BHP	RPM	BHP
	Field Supplied Drive[1]		Standard Static Option						Medium Static Option	
3000	579	0.70	660	0.89	732	1.09	799	1.29	860	1.50
3250	613	0.85	690	1.06	760	1.27	823	1.49	883	1.71
3500	648	1.03	721	1.25	788	1.48	850	1.71	907	1.95
3750	683	1.23	753	1.47	817	1.71	877	1.96	933	2.21
4000	719	1.45	786	1.71	848	1.97	905	2.23	959	2.50
4250	756	1.71	819	1.98	879	2.26	934	2.53	987	2.81
4500	792	1.99	853	2.28	910	2.57	964	2.87	1015	3.16
4750	830	2.31	888	2.62	943	2.92	995	3.23	1044	3.54
5000	867	2.66	923	2.98	976	3.30	1026	3.63	1074	3.95

CFM	AVAILABLE EXTERNAL STATIC PRESSURE (in. wg)									
	1.2		1.4		1.6		1.8		2.0	
	RPM	BHP	RPM	BHP	RPM	BHP	RPM	BHP	RPM	BHP
	Medium Static Option								High Static Option	
3000	917	1.70	970	1.91	1021	2.13	1070	2.34	1117	2.56
3250	938	1.93	991	2.16	1041	2.38	1089	2.61	1134	2.85
3500	961	2.18	1013	2.42	1062	2.66	1108	2.91	1153	3.15
3750	985	2.46	1035	2.71	1083	2.97	1129	3.23	1173	3.49
4000	1011	2.76	1059	3.03	1106	3.30	1151	3.58	1194	3.85
4250	1037	3.09	1084	3.38	1130	3.66	1174	3.95	1216	4.24
4500	1064	3.46	1110	3.76	1155	4.06	1198	4.36	1239	4.66
4750	1091	3.85	1137	4.16	1180	4.48	–	–	–	–
5000	1120	4.28	1164	4.61	–	–	–	–	–	–

NOTE: For more information, see General Fan Performance Notes.
Boldface indicates field supplied drive is required.
1. Recommend using field supplied fan pulley (part no. KR11AD912) and belt (part no. KR29AF051).

Table 54 – 48TC12** | **3 PHASE** | **10 TON VERTICAL SUPPLY**

CFM	AVAILABLE EXTERNAL STATIC PRESSURE (in. wg)									
	0.2		0.4		0.6		0.8		1.0	
	RPM	BHP	RPM	BHP	RPM	BHP	RPM	BHP	RPM	BHP
	Standard Static Option								Medium Static Option	
3000	616	0.79	689	0.97	757	1.16	821	1.36	882	1.57
3250	655	0.96	724	1.16	788	1.37	849	1.58	907	1.80
3500	695	1.17	760	1.38	821	1.60	879	1.83	934	2.06
3750	736	1.41	797	1.63	855	1.86	910	2.10	963	2.35
4000	777	1.68	834	1.91	889	2.16	942	2.41	993	2.67
4250	818	1.98	873	2.23	925	2.49	976	2.75	1025	3.02
4500	860	2.32	912	2.58	962	2.85	1010	3.13	1057	3.41
4750	902	2.69	951	2.97	999	3.26	1046	3.55	1091	3.84
5000	944	3.11	991	3.40	1037	3.70	1082	4.00	1125	4.31

CFM	AVAILABLE EXTERNAL STATIC PRESSURE (in. wg)									
	1.2		1.4		1.6		1.8		2.0	
	RPM	BHP	RPM	BHP	RPM	BHP	RPM	BHP	RPM	BHP
	Medium Static Option						High Static Option			
3000	939	1.79	994	2.01	1047	2.24	1098	2.47	1147	2.71
3250	962	2.03	1015	2.26	1066	2.50	1115	2.75	1163	3.00
3500	987	2.30	1038	2.54	1088	2.80	1135	3.05	1181	3.32
3750	1014	2.60	1063	2.86	1111	3.12	1157	3.39	1202	3.66
4000	1042	2.93	1090	3.20	1136	3.48	1180	3.76	1224	4.04
4250	1072	3.30	1118	3.58	1162	3.87	1205	4.16	**1247**	**4.46**
4500	1103	3.70	1147	4.00	1190	4.29	1232	4.60	–	–
4750	1135	4.14	1177	4.45	–	–	–	–	–	–
5000	1167	4.63	–	–	–	–	–	–	–	–

NOTE: For more information, see General Fan Performance Notes.
Boldface indicates field supplied drive is required.

FAN PERFORMANCE (cont.)

Table 55 – 48TC14** 3 PHASE 12.5 TON HORIZONTAL SUPPLY

CFM	AVAILABLE EXTERNAL STATIC PRESSURE (in. wg)									
	0.2		0.4		0.6		0.8		1.0	
	RPM	BHP	RPM	BHP	RPM	BHP	RPM	BHP	RPM	BHP
			Standard Static Option						Medium Static Option	
3438	639	0.98	713	1.20	781	1.43	843	1.65	901	1.88
3750	683	1.23	753	1.47	817	1.71	877	1.96	933	2.21
4063	728	1.52	794	1.78	855	2.04	912	2.31	966	2.57
4375	774	1.85	836	2.13	894	2.41	949	2.70	1001	2.98
4688	820	2.23	879	2.53	935	2.83	987	3.14	1037	3.44
5000	867	2.66	923	2.98	976	3.30	1026	3.63	1074	3.95
5313	914	3.15	967	3.49	**1018**	**3.83**	1066	4.17	1112	4.52
5625	962	3.69	**1012**	**4.05**	1061	4.42	–	–	–	–
5938	**1009**	**4.30**	1058	4.68	–	–	–	–	–	–
6250	–	–	–	–	–	–	–	–	–	–

CFM	AVAILABLE EXTERNAL STATIC PRESSURE (in. wg)									
	1.2		1.4		1.6		1.8		2.0	
	RPM	BHP	RPM	BHP	RPM	BHP	RPM	BHP	RPM	BHP
	Medium Static Option						High Static Option			
3438	955	2.12	1007	2.35	1056	2.59	1103	2.83	1148	3.08
3750	985	2.46	1035	2.71	1083	2.97	1129	3.23	1173	3.49
4063	1017	2.84	1066	3.12	1112	3.39	1157	3.67	1200	3.95
4375	1050	3.27	1097	3.56	1142	3.86	1186	4.15	1228	4.45
4688	1084	3.75	1130	4.06	1174	4.37	1216	4.68		
5000	1120	4.28	1164	4.61	–	–				
5313	–	–	–	–	–	–	–	–	–	–
5625	–	–	–		–	–	–	–	–	–
5938	–	–	–	–	–	–	–	–	–	–
6250	–	–	–	–	–	–	–	–	–	–

NOTE: For more information, see General Fan Performance Notes.
Boldface indicates field supplied drive is required.

Table 56 – 48TC14** 3 PHASE 12.5 TON VERTICAL SUPPLY

CFM	AVAILABLE EXTERNAL STATIC PRESSURE (in. wg)									
	0.2		0.4		0.6		0.8		1.0	
	RPM	BHP	RPM	BHP	RPM	BHP	RPM	BHP	RPM	BHP
	Standard Static Option						Medium Static Option			
3438	685	1.12	751	1.32	813	1.54	871	1.76	927	1.99
3750	736	1.41	797	1.63	855	1.86	910	2.10	963	2.35
4063	787	1.75	844	1.99	898	2.24	951	2.49	1001	2.75
4375	839	2.14	892	2.40	943	2.67	993	2.94	1041	3.21
4688	891	2.60	941	2.87	990	3.15	1037	3.44	1082	3.73
5000	944	3.11	991	3.40	1037	3.70	1082	4.00	1125	4.31
5313	997	3.69	1042	4.00	1085	4.32	1128	4.64	–	–
5625	1051	4.34	1093	4.67	–	–	–	–	–	–
5938	–	–	–	–	–	–	–	–	–	–
6250	–	–	–	–	–	–	–	–	–	–

CFM	AVAILABLE EXTERNAL STATIC PRESSURE (in. wg)									
	1.2		1.4		1.6		1.8		2.0	
	RPM	BHP	RPM	BHP	RPM	BHP	RPM	BHP	RPM	BHP
			Medium Static Option				High Static Option			
3438	981	2.23	1032	2.47	1082	2.72	1130	2.97	1177	3.23
3750	1014	2.60	1063	2.86	1111	3.12	1157	3.39	1202	3.66
4063	1049	3.02	1097	3.29	1142	3.57	1186	3.85	1230	4.14
4375	1087	3.49	1132	3.78	1176	4.08	1218	4.37	**1260**	**4.68**
4688	1126	4.03	1169	4.33	1211	4.64	–	–	–	–
5000	1167	4.63	–	–	–	–	–	–	–	–
5313	–	–	–	–	–	–	–	–	–	–
5625	–	–	–	–	–	–	–	–	–	–
5938	–	–	–	–	–	–	–	–	–	–
6250	–	–	–	–	–	–	–	–	–	–

NOTE: For more information, see General Fan Performance Notes.
Boldface indicates field supplied drive is required.

FAN PERFORMANCE (cont.)

Table 57 – 48TC16** | **3 PHASE** | **15 TON HORIZONTAL SUPPLY**

CFM	Available External Static Pressure (in. wg)									
	0.2		0.4		0.6		0.8		1.0	
	RPM	BHP	RPM	BHP	RPM	BHP	RPM	BHP	RPM	BHP
4500	479	0.97	540	1.23	596	1.50	651	1.80	703	2.13
4875	508	1.19	566	1.47	619	1.75	670	2.06	719	2.39
5250	537	1.43	592	1.73	643	2.03	691	2.35	737	2.69
5625	566	1.71	619	2.03	667	2.35	713	2.68	757	3.03
6000	596	2.02	646	2.36	692	2.70	736	3.05	778	3.41
6375	625	2.36	674	2.73	718	3.09	760	3.46	800	3.83
6750	655	2.75	701	3.14	744	3.52	785	3.91	824	4.30
7125	685	3.17	729	3.58	771	3.99	810	4.40	848	4.81
7500	715	3.64	758	4.07	798	4.50	836	4.93	872	5.36

CFM	Available External Static Pressure (in. wg)									
	1.2		1.4		1.6		1.8		2.0	
	RPM	BHP	RPM	BHP	RPM	BHP	RPM	BHP	RPM	BHP
4500	755	2.48	805	2.87	853	3.28	900	3.72	945	4.17
4875	768	2.75	815	3.14	862	3.55	907	3.99	951	4.45
5250	783	3.06	828	3.45	872	3.86	916	4.30	**958**	**4.77**
5625	800	3.40	843	3.80	885	4.21	926	4.66	**967**	**5.12**
6000	819	3.79	860	4.19	900	4.61	939	5.06	**978**	**5.53**
6375	840	4.23	878	4.63	916	5.06	954	5.51	**991**	**5.98**
6750	861	4.70	898	5.12	935	5.56	**971**	**6.01**	–	–
7125	884	5.23	919	5.66	–	–	–	–	–	–
7500	907	5.79	–	–	–	–	–	–	–	–

NOTE: For more information, see General Fan Performance Notes.
Boldface indicates field supplied drive is required.

Table 58 – 48TC16** | **3 PHASE** | **15 TON VERTICAL SUPPLY**

CFM	Available External Static Pressure (in. wg)									
	0.2		0.4		0.6		0.8		1.0	
	RPM	BHP	RPM	BHP	RPM	BHP	RPM	BHP	RPM	BHP
4500	487	0.98	552	1.26	610	1.55	665	1.86	718	2.20
4875	515	1.18	578	1.49	633	1.80	685	2.13	735	2.47
5250	544	1.42	604	1.75	657	2.09	707	2.43	754	2.78
5625	572	1.68	631	2.05	682	2.40	730	2.76	775	3.13
6000	601	1.98	657	2.37	707	2.75	753	3.13	797	3.52
6375	630	2.31	684	2.73	733	3.13	777	3.53	819	3.94
6750	659	2.68	711	3.12	759	3.55	802	3.98	843	4.40
7125	689	3.09	739	3.55	785	4.01	827	4.46	867	4.91
7500	718	3.53	**766**	**4.02**	811	4.51	852	4.98	891	5.46

CFM	Available External Static Pressure (in. wg)									
	1.2		1.4		1.6		1.8		2.0	
	RPM	BHP	RPM	BHP	RPM	BHP	RPM	BHP	RPM	BHP
4500	769	2.56	819	2.95	866	3.36	912	3.79	957	4.24
4875	784	2.84	831	3.23	877	3.65	921	4.09	**964**	**4.54**
5250	800	3.16	845	3.56	889	3.98	932	4.43	**974**	**4.89**
5625	819	3.52	862	3.93	903	4.36	944	4.81	**985**	**5.28**
6000	839	3.92	880	4.34	920	4.77	**959**	**5.23**	**997**	**5.70**
6375	860	4.36	899	4.79	937	5.23	**975**	**5.70**	–	–
6750	882	4.84	920	5.28	957	5.74	–	–	–	–
7125	904	5.36	941	5.82	–	–	–	–	–	–
7500	928	5.93	–	–	–	–	–	–	–	–

NOTE: For more information, see General Fan Performance Notes.
Boldface indicates field supplied drive is required.

Table 59 – PULLEY ADJUSTMENT

UNIT		MOTOR/DRIVE COMBO	MOTOR PULLEY TURNS OPEN (RPM)										
			0.0	0.5	1.0	1.5	2.0	2.5	3.0	3.5	4.0	4.5	5.0
04	1 phase	Standard Static	854	825	795	766	736	707	678	648	619	589	560
		Medium Static	1175	1135	1094	1054	1013	973	932	892	851	811	770
		High Static	–	–	–	–	–	–	–	–	–	–	–
	3 phase	Standard Static	854	825	795	766	736	707	678	648	619	589	560
		Medium Static	1175	1135	1094	1054	1013	973	932	892	851	811	770
		High Static	1466	1423	1380	1337	1294	1251	1207	1164	1121	1078	1035
05	1 phase	Standard Static	854	825	795	766	736	707	678	648	619	589	560
		Medium Static	1175	1135	1094	1054	1013	973	932	892	851	811	770
		High Static	–	–	–	–	–	–	–	–	–	–	–
	3 phase	Standard Static	854	825	795	766	736	707	678	648	619	589	560
		Medium Static	1175	1135	1094	1054	1013	973	932	892	851	811	770
		High Static	1466	1423	1380	1337	1294	1251	1207	1164	1121	1078	1035
06	1 phase	Standard Static	1175	1135	1094	1054	1013	973	932	892	851	811	770
		Medium Static	1466	1423	1380	1337	1294	1251	1207	1164	1121	1078	1035
		High Static	–	–	–	–	–	–	–	–	–	–	–
	3 phase	Standard Static	1175	1135	1094	1054	1013	973	932	892	851	811	770
		Medium Static	1466	1423	1380	1337	1294	1251	1207	1164	1121	1078	1035
		High Static	1687	1649	1610	1572	1533	1495	1457	1418	1380	1341	1303
07	3 phase	Standard Static	1457	1419	1380	1342	1303	1265	1227	1188	1150	1111	1073
		Medium Static	1518	1484	1449	1415	1380	1346	1311	1277	1242	1208	1173
		High Static	1788	1757	1725	1694	1662	1631	1600	1568	1537	1505	1474
08	3 phase	Standard Static	747	721	695	670	644	618	592	566	541	515	489
		Medium Static	949	927	906	884	863	841	819	798	776	755	733
		High Static	1102	1083	1063	1044	1025	1006	986	967	948	928	909
09	3 phase	Standard Static	733	712	690	669	647	626	604	583	561	540	518
		Medium Static	936	911	887	862	838	813	788	764	739	715	690
		High Static	1084	1059	1035	1010	986	961	936	912	887	863	838
12	3 phase	Standard Static	838	813	789	764	739	715	690	665	640	616	591
		Medium Static	1084	1059	1035	1010	986	961	936	912	887	863	838
		High Static	1240	1218	1196	1175	1153	1131	1109	1087	1066	1044	1022
14	3 phase	Standard Static	843	824	805	786	767	748	728	709	690	671	652
		Medium Static	1084	1059	1035	1010	986	961	936	912	887	863	838
		High Static	1240	1218	1196	1175	1153	1131	1109	1087	1066	1044	1022
16	3 phase	Standard Static	676	659	642	625	608	592	575	558	541	524	507
		Medium Static	851	829	806	784	761	739	717	694	672	649	627
		High Static	955	937	919	901	883	866	848	830	812	794	776

NOTE: Do not adjust pulley further than 5 turns open.

– Factory settings

Table 60 – 48TC04 SINGLE STAGE COOLING WITH SINGLE SPEED INDOOR FAN MOTOR 3 TONS**

V–Ph–Hz	VOLTAGE RANGE		COMP (ea)		OFM (ea)		IFM		
	MIN	MAX	RLA	LRA	WATTS	FLA	TYPE	EFF at Full Load	FLA
208–1–60	187	253	16.6	79	325	1.5	STD	67%	4.9
					325	1.5	MED	67%	4.9
230–1–60	187	253	16.6	79	325	1.5	STD	67%	4.9
					325	1.5	MED	67%	4.9
208–3–60	187	253	10.4	73	325	1.5	STD	75%	5.2
					325	1.5	MED	75%	5.2
					325	1.5	HIGH	87%	6.9
230–3–60	187	253	10.4	73	325	1.5	STD	75%	5.2
					325	1.5	MED	75%	5.2
					325	1.5	HIGH	87%	6.7
460–3–60	414	506	5.8	38	325	0.8	STD	75%	2.6
					325	0.8	MED	75%	2.6
					325	0.8	HIGH	87%	3.4
575–3–60	518	633	3.8	37	325	0.6	STD	73%	2.4
					325	0.6	MED	73%	2.4
					325	0.6	HIGH	78%	2.0

Table 61 – 48TC05 SINGLE STAGE COOLING WITH SINGLE SPEED INDOOR FAN MOTOR 4 TONS**

V–Ph–Hz	VOLTAGE RANGE		COMP (ea)		OFM (ea)		IFM		
	MIN	MAX	RLA	LRA	WATTS	FLA	TYPE	EFF at Full Load	FLA
208–1–60	187	253	21.8	117	325	1.5	STD	67%	4.9
					325	1.5	MED	67%	4.9
230–1–60	187	253	21.8	117	325	1.5	STD	67%	4.9
					325	1.5	MED	67%	4.9
208–3–60	187	253	13.7	83	325	1.5	STD	75%	5.2
					325	1.5	MED	75%	5.2
					325	1.5	HIGH	87%	6.9
230–3–60	187	253	13.7	83	325	1.5	STD	75%	5.2
					325	1.5	MED	75%	5.2
					325	1.5	HIGH	87%	6.7
460–3–60	414	506	6.2	41	325	0.8	STD	75%	2.6
					325	0.8	MED	75%	2.6
					325	0.8	HIGH	87%	3.4
575–3–60	518	633	4.8	33	325	0.6	STD	73%	2.4
					325	0.6	MED	73%	2.4
					325	0.6	HIGH	78%	2.0

Table 62 – 48TC06 SINGLE STAGE COOLING WITH SINGLE SPEED INDOOR FAN MOTOR 5 TONS**

V–Ph–Hz	VOLTAGE RANGE		COMP (ea)		OFM (ea)		IFM		
	MIN	MAX	RLA	LRA	WATTS	FLA	TYPE	EFF at Full Load	FLA
208–1–60	187	253	26.2	134	325	1.5	STD	67%	4.9
					325	1.5	MED	76%	7.0
230–1–60	187	253	26.2	134	325	1.5	STD	67%	4.9
					325	1.5	MED	76%	7.0
208–3–60	187	253	15.6	110	325	1.5	STD	75%	5.2
					325	1.5	MED	87%	6.9
					325	1.5	HIGH	89%	8.4
230–3–60	187	253	15.6	110	325	1.5	STD	75%	5.2
					325	1.5	MED	87%	6.7
					325	1.5	HIGH	89%	8.3
460–3–60	414	506	7.7	52	325	0.8	STD	75%	2.6
					325	0.8	MED	87%	3.4
					325	0.8	HIGH	89%	4.2
575–3–60	518	633	5.8	39	325	0.6	STD	73%	2.4
					325	0.6	MED	78%	2.0
					325	0.6	HIGH	77%	2.8

Table 63 – 48TC07 SINGLE STAGE COOLING WITH SINGLE SPEED INDOOR FAN MOTOR 6 TONS**

(Units Produced On or After 02/09/2015)

V–Ph–Hz	VOLTAGE RANGE		COMP (ea)		OFM (ea)		IFM		
	MIN	MAX	RLA	LRA	WATTS	FLA	TYPE	EFF at Full Load	FLA
208–3–60	187	253	19.6	136	325	1.5	STD	87%	6.9
					325	1.5	MED	89%	8.4
					325	1.5	HIGH	87%	10.6
230–3–60	187	253	19.6	136	325	1.5	STD	87%	6.7
					325	1.5	MED	89%	8.3
					325	1.5	HIGH	87%	10.6
460–3–60	414	506	8.2	66	325	0.8	STD	87%	3.4
					325	0.8	MED	89%	4.2
					325	0.8	HIGH	87%	5.3
575–3–60	518	633	6.6	55	325	0.6	STD	78%	2.0
					325	0.6	MED	77%	2.8
					325	0.6	HIGH	77%	2.8

(Units Produced on or Prior to 02/08/2015)

V–Ph–Hz	VOLTAGE RANGE		COMP (ea)		OFM (ea)		IFM		
	MIN	MAX	RLA	LRA	WATTS	FLA	TYPE	EFF at Full Load	FLA
208–3–60	187	253	19.0	123	325	1.5	STD	87%	6.9
					325	1.5	MED	89%	8.4
					325	1.5	HIGH	87%	10.6
230–3–60	187	253	19.0	123	325	1.5	STD	87%	6.7
					325	1.5	MED	89%	8.3
					325	1.5	HIGH	87%	10.6
460–3–60	414	506	9.7	62	325	0.8	STD	87%	3.4
					325	0.8	MED	89%	4.2
					325	0.8	HIGH	87%	5.3
575–3–60	518	633	7.4	50	325	0.6	STD	78%	2.0
					325	0.6	MED	77%	2.8
					325	0.6	HIGH	77%	2.8

Table 64 – 48TC08 SINGLE STAGE COOLING WITH SINGLE SPEED INDOOR FAN MOTOR 7.5 TONS**

V–Ph–Hz	VOLTAGE RANGE		COMP (ea)		OFM (ea)		IFM		
	MIN	MAX	RLA	LRA	WATTS	FLA	TYPE	EFF at Full Load	FLA
208–3–60	187	253	25.0	164	325	1.5	STD	87%	5.2
					325	1.5	MED	89%	8.4
					325	1.5	HIGH	83%	13.6
230–3–60	187	253	25.0	164	325	1.5	STD	87%	4.9
					325	1.5	MED	89%	8.3
					325	1.5	HIGH	83%	12.7
460–3–60	414	506	12.2	100	325	0.8	STD	87%	2.5
					325	0.8	MED	89%	4.2
					325	0.8	HIGH	83%	6.4
575–3–60	518	633	9.0	78	325	0.6	STD	72%	1.6
					325	0.6	MED	77%	2.8
					325	0.6	HIGH	81%	5.6

Table 65 – 48TCD08 2-STAGE COOLING WITH SINGLE SPEED INDOOR FAN MOTOR 7.5 TONS**

V–Ph–Hz	VOLTAGE RANGE		COMP (Cir 1)		COMP (Cir 2)		OFM (ea)		IFM		
	MIN	MAX	RLA	LRA	RLA	LRA	WATTS	FLA	TYPE	EFF at Full Load	FLA
208–3–60	187	253	13.6	83	13.6	83	325	1.5	STD	87%	5.2
							325	1.5	MED	89%	8.4
							325	1.5	HIGH	83%	13.6
230–3–60	187	253	13.6	83	13.6	83	325	1.5	STD	87%	4.9
							325	1.5	MED	89%	8.3
							325	1.5	HIGH	83%	12.7
460–3–60	414	506	6.1	41	6.1	41	325	0.8	STD	87%	2.5
							325	0.8	MED	89%	4.2
							325	0.8	HIGH	83%	6.4
575–3–60	518	633	4.2	33	4.2	33	325	0.6	STD	72%	1.6
							325	0.6	MED	77%	2.8
							325	0.6	HIGH	81%	5.6

Table 66 – 48TC*D08 2-STAGE COOLING WITH 2 SPEED INDOOR FAN MOTOR 7.5 TONS

V–Ph–Hz	VOLTAGE RANGE		COMP 1		COMP 2		OFM (ea)		IFM		
	MIN	MAX	RLA	LRA	RLA	LRA	WATTS	FLA	TYPE	EFF at Full Load	FLA
208–3–60	187	253	13.6	83	13.6	83	325	1.5	STD	0.84	5.8
							325	1.5	MED	0.85	8.6
							325	1.5	HIGH	0.84	13.6
230–3–60	187	253	13.6	83	13.6	83	325	1.5	STD	0.84	5.6
							325	1.5	MED	0.85	7.8
							325	1.5	HIGH	0.84	12.7
460–3–60	414	506	6.1	41	6.1	41	325	0.8	STD	0.79	2.9
							325	0.8	MED	0.85	3.8
							325	0.8	HIGH	0.84	6.4
575–3–60	518	633	4.2	33	4.2	33	325	0.6	STD	0.81	2.8
							325	0.6	MED	0.84	4.5
							325	0.6	HIGH	0.83	6.2

Table 67 – 48TC09 SINGLE STAGE COOLING WITH SINGLE SPEED INDOOR FAN MOTOR 8.5 TONS**

V–Ph–Hz	VOLTAGE RANGE		COMP (ea)		OFM (ea)		IFM		
	MIN	MAX	RLA	LRA	WATTS	FLA	TYPE	EFF at Full Load	FLA
208–3–60	187	253	27.6	191	325	1.5	STD	87%	5.2
					325	1.5	MED	87%	6.9
					325	1.5	HIGH	87%	10.6
230–3–60	187	253	27.6	191	325	1.5	STD	87%	4.9
					325	1.5	MED	87%	6.7
					325	1.5	HIGH	87%	10.6
460–3–60	414	506	12.8	100	325	0.8	STD	87%	2.5
					325	0.8	MED	87%	3.4
					325	0.8	HIGH	87%	5.3
575–3–60	518	633	9.6	78	325	0.6	STD	72%	1.6
					325	0.6	MED	78%	2.0
					325	0.6	HIGH	77%	2.8

Table 68 – 48TC09 2-STAGE COOLING WITH SINGLE SPEED INDOOR FAN MOTOR 8.5 TONS**

V–Ph–Hz	VOLTAGE RANGE		COMP (Cir 1)		COMP (Cir 2)		OFM (ea)		IFM		
	MIN	MAX	RLA	LRA	RLA	LRA	WATTS	FLA	TYPE	EFF at Full Load	FLA
208–3–60	187	253	14.5	98	13.7	83	325	1.5	STD	87%	5.2
							325	1.5	MED	87%	6.9
							325	1.5	HIGH	87%	10.6
230–3–60	187	253	14.5	98	13.7	83	325	1.5	STD	87%	4.9
							325	1.5	MED	87%	6.7
							325	1.5	HIGH	87%	10.6
460–3–60	414	506	6.3	55	6.2	41	325	0.8	STD	87%	2.5
							325	0.8	MED	87%	3.4
							325	0.8	HIGH	87%	5.3
575–3–60	518	633	6.0	41	4.8	33	325	0.6	STD	72%	1.6
							325	0.6	MED	78%	2.0
							325	0.6	HIGH	77%	2.8

Table 69 – 48TC*D09 2-STAGE COOLING WITH 2 SPEED INDOOR FAN MOTOR 8.5 TONS

V–Ph–Hz	VOLTAGE RANGE		COMP 1		COMP 2		OFM (ea)		IFM		
	MIN	MAX	RLA	LRA	RLA	LRA	WATTS	FLA	TYPE	EFF at Full Load	FLA
208–3–60	187	253	14.5	98	13.7	83	325	1.5	STD	0.84	5.8
							325	1.5	MED	0.77	7.1
							325	1.5	HIGH	0.82	10.8
230–3–60	187	253	14.5	98	13.7	83	325	1.5	STD	0.84	5.6
							325	1.5	MED	0.77	6.8
							325	1.5	HIGH	0.82	9.8
460–3–60	414	506	6.3	55	6.2	41	325	0.8	STD	0.79	2.9
							325	0.8	MED	0.77	3.8
							325	0.8	HIGH	0.82	4.9
575–3–60	518	633	6.0	41	4.8	33	325	0.6	STD	0.81	2.8
							325	0.6	MED	0.80	3.5
							325	0.6	HIGH	0.84	4.5

Table 70 – 48TC12 2-STAGE COOLING WITH SINGLE SPEED INDOOR FAN MOTOR 10 TONS**

V–Ph–Hz	VOLTAGE RANGE		COMP (Cir 1)		COMP (Cir 2)		OFM (ea)		IFM		
	MIN	MAX	RLA	LRA	RLA	LRA	WATTS	FLA	TYPE	EFF at Full Load	FLA
208–3–60	187	253	15.6	110	15.9	110	325	1.5	STD	87%	6.9
							325	1.5	MED	87%	10.6
							325	1.5	HIGH	83%	13.6
230–3–60	187	253	15.6	110	15.9	110	325	1.5	STD	87%	6.7
							325	1.5	MED	87%	10.6
							325	1.5	HIGH	83%	12.7
460–3–60	414	506	7.7	52	7.7	52	325	0.8	STD	87%	3.4
							325	0.8	MED	87%	5.3
							325	0.8	HIGH	83%	6.4
575–3–60	518	633	5.8	39	5.7	39	325	0.6	STD	78%	2.0
							325	0.6	MED	77%	2.8
							325	0.6	HIGH	81%	5.6

Table 71 – 48TC12 2-STAGE COOLING WITH SINGLE SPEED INDOOR FAN MOTOR 10 TONS**

V–Ph–Hz	VOLTAGE RANGE		COMP (Cir 1)		COMP (Cir 2)		OFM (ea)		IFM		
	MIN	MAX	RLA	LRA	RLA	LRA	WATTS	FLA	TYPE	EFF at Full Load	FLA
208–3–60	187	253	15.6	110	15.9	110	325	1.5	STD	87%	6.9
							325	1.5	MED	87%	10.6
							325	1.5	HIGH	83%	13.6
230–3–60	187	253	15.6	110	15.9	110	325	1.5	STD	87%	6.7
							325	1.5	MED	87%	10.6
							325	1.5	HIGH	83%	12.7
460–3–60	414	506	7.7	52	7.7	52	325	0.8	STD	87%	3.4
							325	0.8	MED	87%	5.3
							325	0.8	HIGH	83%	6.4
575–3–60	518	633	5.8	39	5.7	39	325	0.6	STD	78%	2.0
							325	0.6	MED	77%	2.8
							325	0.6	HIGH	81%	5.6

Table 72 – 48TC*D12 2-STAGE COOLING WITH 2 SPEED INDOOR FAN MOTOR 10 TONS

V–Ph–Hz	VOLTAGE RANGE		COMP 1		COMP 2		OFM (ea)		IFM		
	MIN	MAX	RLA	LRA	RLA	LRA	WATTS	FLA	TYPE	EFF at Full Load	FLA
208–3–60	187	253	15.6	110	15.9	110	325	1.5	STD	0.77	7.1
							325	1.5	MED	0.82	10.8
							325	1.5	HIGH	0.84	13.6
230–3–60	187	253	15.6	110	15.9	110	325	1.5	STD	0.77	6.8
							325	1.5	MED	0.82	9.8
							325	1.5	HIGH	0.84	12.7
460–3–60	414	506	7.7	52	7.7	52	325	0.8	STD	0.77	3.8
							325	0.8	MED	0.82	4.9
							325	0.8	HIGH	0.84	6.4
575–3–60	518	633	5.8	39	5.7	39	325	0.6	STD	0.80	3.5
							325	0.6	MED	0.84	4.5
							325	0.6	HIGH	0.83	6.2

Table 73 – 48TC14 2-STAGE COOLING WITH SINGLE SPEED INDOOR FAN MOTOR 12.5 TONS**

(Units Produced On or After 02/16/2015)

V–Ph–Hz	VOLTAGE RANGE		COMP (Cir 1)		COMP (Cir 2)		OFM (ea)		IFM		
	MIN	MAX	RLA	LRA	RLA	LRA	WATTS	FLA	TYPE	EFF at Full Load	FLA
208–3–60	187	253	19.6	136	22.4	149	1070	6.2	STD	89%	8.4
							1070	6.2	MED	87%	10.6
							1070	6.2	HIGH	83%	13.6
230–3–60	187	253	19.6	136	22.4	149	1070	6.2	STD	89%	8.3
							1070	6.2	MED	87%	10.6
							1070	6.2	HIGH	83%	12.7
460–3–60	414	506	8.2	66	10.6	75	1070	3.1	STD	89%	4.2
							1070	3.1	MED	87%	5.3
							1070	3.1	HIGH	83%	6.4
575–3–60	518	633	6.6	55	7.7	54	1070	2.5	STD	77%	2.8
							1070	2.5	MED	77%	2.8
							1070	2.5	HIGH	81%	5.6

ELECTRICAL INFORMATION) cont.

(Units Produced on or Prior to 02/15/2015)

V–Ph–Hz	VOLTAGE RANGE		COMP (Cir 1)		COMP (Cir 2)		OFM (ea)		IFM		
	MIN	MAX	RLA	LRA	RLA	LRA	WATTS	FLA	TYPE	EFF at Full Load	FLA
208–3–60	187	253	19.0	123	22.4	149	1070	6.2	STD	89%	8.4
							1070	6.2	MED	87%	10.6
							1070	6.2	HIGH	83%	13.6
230–3–60	187	253	19.0	123	22.4	149	1070	6.2	STD	89%	8.3
							1070	6.2	MED	87%	10.6
							1070	6.2	HIGH	83%	12.7
460–3–60	414	506	9.7	62	10.6	75	1070	3.1	STD	89%	4.2
							1070	3.1	MED	87%	5.3
							1070	3.1	HIGH	83%	6.4
575–3–60	518	633	7.4	50	7.7	54	1070	2.5	STD	77%	2.8
							1070	2.5	MED	77%	2.8
							1070	2.5	HIGH	81%	5.6

Table 74 – 48TC*D14 2-STAGE COOLING WITH 2 SPEED INDOOR FAN MOTOR 12.5 TONS

(Units Produced On or After 02/16/2015)

V–Ph–Hz	VOLTAGE RANGE		COMP 1		COMP 2		OFM (ea)		IFM		
	MIN	MAX	RLA	LRA	RLA	LRA	WATTS	FLA	TYPE	EFF at Full Load	FLA
208–3–60	187	253	19.6	136	22.4	149	1070	6.2	STD	0.85	8.6
							1070	6.2	MED	0.82	10.8
							1070	6.2	HIGH	0.84	13.6
230–3–60	187	253	19.6	136	22.4	149	1070	6.2	STD	0.85	7.8
							1070	6.2	MED	0.82	9.8
							1070	6.2	HIGH	0.84	12.7
460–3–60	414	506	8.2	66	10.6	75	1070	3.1	STD	0.85	3.8
							1070	3.1	MED	0.82	4.9
							1070	3.1	HIGH	0.84	6.4
575–3–60	518	633	6.6	55	7.7	54	1070	2.5	STD	0.84	4.5
							1070	2.5	MED	0.84	4.5
							1070	2.5	HIGH	0.83	6.2

(Units Produced on or Prior to 02/15/2015)

V–Ph–Hz	VOLTAGE RANGE		COMP 1		COMP 2		OFM (ea)		IFM		
	MIN	MAX	RLA	LRA	RLA	LRA	WATTS	FLA	TYPE	EFF at Full Load	FLA
208–3–60	187	253	19.0	123	22.4	149	1070	6.2	STD	0.85	8.6
							1070	6.2	MED	0.82	10.8
							1070	6.2	HIGH	0.84	13.6
230–3–60	187	253	19.0	123	22.4	149	1070	6.2	STD	0.85	7.8
							1070	6.2	MED	0.82	9.8
							1070	6.2	HIGH	0.84	12.7
460–3–60	414	506	9.7	62	10.6	75	1070	3.1	STD	0.85	3.8
							1070	3.1	MED	0.82	4.9
							1070	3.1	HIGH	0.84	6.4
575–3–60	518	633	7.4	50	7.7	54	1070	2.5	STD	0.84	4.5
							1070	2.5	MED	0.84	4.5
							1070	2.5	HIGH	0.83	6.2

Table 75 – 48TC*D16 2-STAGE COOLING WITH SINGLE SPEED INDOOR FAN MOTOR 15 TONS

V–Ph–Hz	VOLTAGE RANGE		COMP (Cir 1)		COMP (Cir 2)		OFM (ea)		IFM		
	MIN	MAX	RLA	LRA	RLA	LRA	WATTS	FLA	TYPE	EFF at Full Load	FLA
208–3–60	187	253	25.0	164	25.0	164	280	1.5	STD	89%	8.4
							280	1.5	MED	87%	10.6
							280	1.5	HIGH	90%	20.4
230–3–60	187	253	25.0	164	25.0	164	280	1.5	STD	89%	8.3
							280	1.5	MED	87%	10.6
							280	1.5	HIGH	90%	20.4
460–3–60	414	506	12.2	100	12.8	100	280	0.8	STD	89%	4.2
							280	0.8	MED	87%	5.3
							280	0.8	HIGH	90%	10.2
575–3–60	518	633	9.8	78	9.6	78	280	0.6	STD	77%	2.8
							280	0.6	MED	77%	2.8
							280	0.6	HIGH	94%	9.0

Table 76 – 48TC*D16 2-STAGE COOLING WITH 2 SPEED INDOOR FAN MOTOR 15 TONS

V–Ph–Hz	VOLTAGE RANGE		COMP 1		COMP 2		OFM (ea)		IFM		
	MIN	MAX	RLA	LRA	RLA	LRA	WATTS	FLA	TYPE	EFF at Full Load	FLA
208–3–60	187	253	25.0	164	25.0	164	280	1.5	STD	0.85	8.6
							280	1.5	MED	0.82	10.8
							280	1.5	HIGH	0.90	20.4
230–3–60	187	253	25.0	164	25.0	164	280	1.5	STD	0.85	7.8
							280	1.5	MED	0.82	9.8
							280	1.5	HIGH	0.90	20.4
460–3–60	414	506	12.2	100	12.8	100	280	0.8	STD	0.85	3.8
							280	0.8	MED	0.82	4.9
							280	0.8	HIGH	0.90	10.2
575–3–60	518	633	9.8	78	9.6	78	280	0.6	STD	0.84	4.5
							280	0.6	MED	0.84	4.5
							280	0.6	HIGH	0.94	9

ELECTRICAL INFORMATION cont.

Table 77 – UNIT WIRE/FUSE OR HACR BREAKER SIZING DATA WITH SINGLE SPEED INDOOR FAN MOTOR

UNIT	NOM. V–Ph–Hz	IFM TYPE	NO C.O. or UNPWR C.O.								w/ PWRD C.O.							
			NO P.E.				w/ P.E. (pwrd fr/ unit)				NO P.E.				w/ P.E. (pwrd fr/ unit)			
			MCA	MAX FUSE or HACR BRKR	DISC. SIZE		MCA	MAX FUSE or HACR BRKR	DISC. SIZE		MCA	MAX FUSE or HACR BRKR	DISC. SIZE		MCA	MAX FUSE or HACR BRKR	DISC. SIZE	
					FLA	LRA			FLA	LRA			FLA	LRA			FLA	LRA
48TC**04	208/230–1–60	STD	28	40	26	95	30	45	29	97	–	–	–	–	–	–	–	–
		MED	28	40	26	95	30	45	29	97	–	–	–	–	–	–	–	–
	208/230–3–60	STD	20	30	20	96	22	30	22	98	25	30	25	101	27	30	27	103
		MED	20	30	20	96	22	30	22	98	25	30	25	101	27	30	27	103
		HIGH	22/22	30/30	22/21	134	24/24	30/30	24/24	136	27/26	30/30	27/27	139	29/28	35/35	29/29	141
	460–3–60	STD	11	15	11	49	12	15	12	50	13	15	13	51	14	20	14	52
		MED	11	15	11	49	12	15	12	50	13	15	13	51	14	20	14	52
		HIGH	12	15	12	68	13	15	13	69	14	20	14	70	15	20	15	71
	575–3–60	STD	8	15	8	46	10	15	10	48	10	15	10	48	12	15	12	50
		MED	8	15	8	46	10	15	10	48	10	15	10	48	12	15	12	50
		HIGH	8	15	7	50	10	15	10	52	10	15	9	52	11	15	12	54
48TC**05	208/230–1–60	STD	34	50	32	133	36	50	35	135	–	–	–	–	–	–	–	–
		MED	34	50	32	133	36	50	35	135	–	–	–	–	–	–	–	–
	208/230–3–60	STD	24	30	23	106	26	30	26	108	29	40	29	111	31	40	31	113
		MED	24	30	23	106	26	30	26	108	29	40	29	111	31	40	31	113
		HIGH	26/26	30/30	25/25	144	28/28	40/40	28/27	146	31/31	40/40	31/31	149	33/32	45/45	33/33	151
	460–3–60	STD	12	15	11	52	13	15	12	53	14	15	14	54	15	20	15	55
		MED	12	15	11	52	13	15	12	53	14	15	14	54	15	20	15	55
		HIGH	12	15	12	71	13	15	13	72	15	20	14	73	16	20	16	74
	575–3–60	STD	9	15	9	42	11	15	11	44	11	15	11	44	13	15	13	46
		MED	9	15	9	42	11	15	11	44	11	15	11	44	13	15	13	46
		HIGH	9	15	9	46	11	15	11	48	11	15	10	48	13	15	13	50

ELECTRICAL INFORMATION cont.

Table 77 - UNIT WIRE/FUSE OR HACR BREAKER SIZING DATA WITH SINGLE SPEED INDOOR FAN MOTOR (cont.)

UNIT	NOM. V–Ph–Hz	IFM TYPE	NO C.O. or UNPWR C.O.								w/ PWRD C.O.							
			NO P.E.				w/ P.E. (pwrd fr/ unit)				NO P.E.				w/ P.E. (pwrd fr/ unit)			
			MCA	MAX FUSE or HACR BRKR	DISC. SIZE		MCA	MAX FUSE or HACR BRKR	DISC. SIZE		MCA	MAX FUSE or HACR BRKR	DISC. SIZE		MCA	MAX FUSE or HACR BRKR	DISC. SIZE	
					FLA	LRA			FLA	LRA			FLA	LRA			FLA	LRA
48TC**06	208/230–1–60	STD	40	60	37	150	42	60	40	152	–	–	–	–	–	–	–	–
		MED	42	60	40	175	44	60	42	177	–	–	–	–	–	–	–	–
	208/230–3–60	STD	27	40	26	133	29	40	28	135	31	45	31	138	33	45	33	140
		MED	28/28	40/40	28/27	171	30/30	45/45	30/30	173	33/33	45/45	33/33	176	35/35	50/50	35/35	178
		HIGH	30/30	45/40	29/29	186	32/32	45/45	32/31	188	35/35	45/45	35/35	191	37/36	50/50	37/37	193
	460–3–60	STD	13	20	13	63	14	20	14	64	16	20	15	65	17	20	16	66
		MED	14	20	14	82	15	20	15	83	16	20	16	84	17	20	17	85
		HIGH	15	20	15	90	16	20	16	91	17	20	17	92	18	25	18	93
	575–3–60	STD	11	15	10	48	13	15	12	50	12	15	12	50	14	20	14	52
		MED	10	15	10	52	12	15	12	54	12	15	12	54	14	15	14	56
		HIGH	11	15	11	63	13	15	13	65	13	15	13	65	15	20	15	67
48TC*A07 Units built on or after 02/09/2015	208/230–3–60	STD	33/33	50/50	32/32	197	35/35	50/50	34/34	199	38/38	50/50	38/37	202	40/40	50/50	40/40	204
		MED	35/35	50/50	34/34	212	37/37	50/50	36/36	214	40/40	50/50	39/39	217	42/41	60/60	42/42	219
		HIGH	37	50	36	226	39	50	39	228	42	60	42	231	44	60	44	233
	460–3–60	STD	15	20	14	96	16	20	15	97	17	20	17	98	18	25	18	99
		MED	16	20	15	104	17	20	16	105	18	25	18	106	19	25	19	107
		HIGH	17	20	16	111	18	25	18	112	19	25	19	113	20	25	20	114
	575–3–60	STD	11	15	11	68	13	15	13	70	13	15	13	70	15	20	15	72
		MED	12	15	12	79	14	20	14	81	14	15	13	81	16	20	16	83
		HIGH	12	15	12	79	14	20	14	81	14	15	13	81	16	20	16	83
48TC*A07 Units built on or prior to 02/08/2015	208/230–3–60	STD	33/32	50/50	32/31	184	35/34	50/50	34/33	186	37/37	50/50	37/37	189	39/39	50/50	39/39	191
		MED	34/34	50/50	33/33	199	36/36	50/50	35/35	201	39/39	50/50	39/39	204	41/41	50/50	41/41	206
		HIGH	36	50	36	213	38	50	38	215	41	50	41	218	43	60	43	220
	460–3–60	STD	17	25	16	92	18	25	17	93	19	25	19	94	20	25	20	95
		MED	18	25	17	100	19	25	18	101	20	25	19	102	21	30	21	103
		HIGH	19	25	18	107	20	25	19	108	21	30	21	109	22	30	22	110
	575–3–60	STD	12	15	12	63	14	20	14	65	14	20	13	65	16	20	16	67
		MED	13	20	12	74	15	20	15	76	15	20	14	76	17	20	17	78
		HIGH	13	20	12	74	15	20	15	76	15	20	14	76	17	20	17	78

ELECTRICAL INFORMATION cont.

Table 77 - UNIT WIRE/FUSE OR HACR BREAKER SIZING DATA WITH SINGLE SPEED INDOOR FAN MOTOR (cont.)

UNIT	NOM. V–Ph–Hz	IFM TYPE	NO C.O. or UNPWR C.O.								w/ PWRD C.O.							
			NO P.E.				w/ P.E. (pwrd fr/ unit)				NO P.E.				w/ P.E. (pwrd fr/ unit)			
			MCA	MAX FUSE or HACR BRKR	DISC. SIZE		MCA	MAX FUSE or HACR BRKR	DISC. SIZE		MCA	MAX FUSE or HACR BRKR	DISC. SIZE		MCA	MAX FUSE or HACR BRKR	DISC. SIZE	
					FLA	LRA			FLA	LRA			FLA	LRA			FLA	LRA
48TC*A08	208/230–3–60	STD	40/40	60/60	38/38	208	44/43	60/60	43/42	212	45/44	60/60	44/43	213	49/48	60/60	48/48	217
		MED	43/43	60/60	42/42	244	47/47	60/60	46/46	248	48/48	60/60	47/47	249	52/52	60/60	52/52	253
		HIGH	48/47	60/60	48/47	260	52/51	60/60	52/51	264	53/52	60/60	53/52	265	57/56	80/80	58/57	269
	460–3–60	STD	20	30	19	122	22	30	21	124	22	30	21	124	24	30	23	126
		MED	22	30	21	140	23	30	23	142	24	30	23	142	26	30	25	144
		HIGH	24	30	23	148	26	30	25	150	26	30	26	150	28	35	28	152
	575–3–60	STD	15	20	14	89	18	25	18	93	16	20	16	91	20	25	20	95
		MED	16	20	15	104	20	25	19	108	17	25	17	106	21	25	21	110
		HIGH	19	25	18	118	22	30	23	122	20	25	20	120	24	30	24	124

ELECTRICAL INFORMATION cont.

Table 77 - UNIT WIRE/FUSE OR HACR BREAKER SIZING DATA WITH SINGLE SPEED INDOOR FAN MOTOR (cont.)

UNIT	NOM. V–Ph–Hz	IFM TYPE	NO C.O. or UNPWR C.O.								w/ PWRD C.O.							
			NO P.E.				w/ P.E. (pwrd fr/ unit)				NO P.E.				w/ P.E. (pwrd fr/ unit)			
			MCA	MAX FUSE or HACR BRKR	DISC. SIZE		MCA	MAX FUSE or HACR BRKR	DISC. SIZE		MCA	MAX FUSE or HACR BRKR	DISC. SIZE		MCA	MAX FUSE or HACR BRKR	DISC. SIZE	
					FLA	LRA			FLA	LRA			FLA	LRA			FLA	LRA
48TC*D08	208/230–3–60	STD	39/39	50/50	41/40	210	43/43	50/50	45/45	214	44/44	50/50	46/46	215	48/48	60/60	51/50	219
		MED	42/42	50/50	44/44	246	46/46	50/50	49/49	250	47/47	60/60	50/50	251	51/51	60/60	54/54	255
		HIGH	48/47	60/50	50/49	262	51/51	60/60	55/54	266	52/52	60/60	56/55	267	56/55	60/60	60/59	271
	460–3–60	STD	18	20	19	104	20	25	21	106	20	25	21	106	22	25	23	108
		MED	20	25	21	122	22	25	23	124	22	25	23	124	24	30	25	126
		HIGH	22	25	23	130	24	30	25	132	24	30	26	132	26	30	28	134
	575–3–60	STD	13	15	13	77	17	20	17	81	14	15	15	79	18	20	19	83
		MED	14	15	14	92	18	20	19	96	16	20	16	94	19	25	21	98
		HIGH	17	20	17	106	21	25	22	110	19	20	19	108	23	25	24	112
48TC*A09	208/230–3–60	STD	46/45	60/60	43/43	239	49/49	60/60	48/47	243	50/50	60/60	49/49	244	54/54	80/80	53/53	248
		MED	47/47	60/60	45/45	260	51/51	60/60	50/49	264	52/52	60/60	51/51	265	56/56	80/80	55/55	269
		HIGH	51	60	50	289	55	80	54	293	56	80	55	294	60	80	59	298
	460–3–60	STD	23	30	22	117	25	30	24	119	25	30	24	119	27	40	26	121
		MED	24	30	23	127	26	30	25	129	26	30	25	129	28	40	27	131
		HIGH	26	30	25	142	28	40	27	144	28	40	27	144	30	40	29	146
	575–3–60	STD	19	30	17	91	22	30	22	95	20	30	19	93	24	30	24	97
		MED	19	30	18	95	23	30	22	99	21	30	20	97	24	30	24	101
		HIGH	20	30	19	106	24	30	23	110	21	30	21	108	25	30	25	112
48TC*D09	208/230–3–60	STD	40/40	50/50	42/42	225	44/44	50/50	46/46	229	45/45	50/50	47/47	230	49/49	60/60	52/51	234
		MED	42/42	50/50	44/44	246	46/46	60/50	48/48	250	47/47	60/60	49/49	251	51/51	60/60	54/53	255
		HIGH	46	50	48	275	50	60	52	279	51	60	54	280	54	60	58	284
	460–3–60	STD	19	20	19	118	20	25	21	120	21	25	22	120	23	25	24	122
		MED	20	25	20	128	21	25	22	130	22	25	23	130	24	25	25	132
		HIGH	21	25	22	143	23	25	24	145	24	25	25	145	25	30	27	147
	575–3–60	STD	16	20	16	85	19	25	20	89	17	20	18	87	21	25	22	91
		MED	16	20	16	89	20	25	20	93	18	20	18	91	21	25	22	95
		HIGH	17	20	17	100	21	25	21	104	18	20	19	102	22	25	23	106

ELECTRICAL INFORMATION cont.

Table 77 - UNIT WIRE/FUSE OR HACR BREAKER SIZING DATA WITH SINGLE SPEED INDOOR FAN MOTOR (cont.)

UNIT	NOM. V–Ph–Hz	IFM TYPE	NO C.O. or UNPWR C.O.								w/ PWRD C.O.							
			NO P.E.				w/ P.E. (pwrd fr/ unit)				NO P.E.				w/ P.E. (pwrd fr/ unit)			
			MCA	MAX FUSE or HACR BRKR	DISC. SIZE		MCA	MAX FUSE or HACR BRKR	DISC. SIZE		MCA	MAX FUSE or HACR BRKR	DISC. SIZE		MCA	MAX FUSE or HACR BRKR	DISC. SIZE	
					FLA	LRA			FLA	LRA			FLA	LRA			FLA	LRA
48TC*A12	208/230–3–60	STD	48/48	60/60	46/46	290	52/52	60/60	50/50	294	53/53	60/60	52/51	295	57/56	80/80	56/56	299
		MED	52	60	50	319	55	80	55	323	56	80	56	324	60	80	60	328
		HIGH	55/54	80/80	54/53	321	58/58	80/80	58/57	325	59/59	80/80	59/58	326	63/62	80/80	64/63	330
	460–3–60	STD	26	40	25	146	28	40	27	148	29	40	27	148	30	45	30	150
		MED	28	40	27	161	30	45	29	163	30	45	30	163	32	45	32	165
		HIGH	29	45	28	162	31	45	30	164	32	45	31	164	33	45	33	166
	575–3–60	STD	19	30	18	95	23	30	22	99	21	30	20	97	24	30	24	101
		MED	20	30	19	106	24	30	23	110	21	30	21	108	25	30	25	112
		HIGH	23	30	22	120	26	30	26	124	24	30	24	122	28	35	28	126
48TC*D12	208/230–3–60	STD	46/46	60/60	48/47	285	50/49	60/60	52/52	289	51/50	60/60	53/53	290	54/54	60/60	58/57	294
		MED	50	60	52	314	53	60	56	318	54	60	57	319	58	70	62	323
		HIGH	53/52	60/60	55/54	316	56/55	60/60	60/59	320	57/56	70/60	61/60	321	61/60	70/70	65/64	325
	460–3–60	STD	23	30	23	136	25	30	26	138	25	30	26	138	27	30	28	140
		MED	25	30	26	151	26	30	28	153	27	30	28	153	29	35	30	155
		HIGH	26	30	27	152	28	30	29	154	28	30	29	154	30	35	32	156
	575–3–60	STD	17	20	17	93	20	25	21	97	18	20	19	95	22	25	23	99
		MED	17	20	18	104	21	25	22	108	19	25	20	106	23	25	24	110
		HIGH	20	25	21	118	24	30	25	122	22	25	23	120	26	30	27	124
48TC*D14 (2–stage cool) Units built on or after 02/16/2015	208/230–3–60	STD	63/63	80/80	65/65	389	66/66	80/80	69/69	393	67/67	80/80	71/70	394	71/71	80/80	75/75	398
		MED	65	80	68	403	69	80	72	407	70	80	73	408	73	80	78	412
		HIGH	68/67	80/80	71/70	405	72/71	80/80	75/74	409	–	–	–	–	–	–	–	–
	460–3–60	STD	29	35	30	193	31	40	32	195	31	40	33	195	33	40	35	197
		MED	30	40	31	200	32	40	33	202	33	40	34	202	34	40	36	204
		HIGH	31	40	33	201	33	40	35	203	34	40	35	203	35	45	37	205
	575–3–60	STD	22	25	23	147	26	30	27	151	24	30	24	149	27	30	29	153
		MED	22	25	23	147	26	30	27	151	24	30	24	149	27	30	29	153
		HIGH	25	30	26	161	29	35	30	165	26	30	28	163	30	35	32	167

ELECTRICAL INFORMATION cont.

Table 77 - UNIT WIRE/FUSE OR HACR BREAKER SIZING DATA WITH SINGLE SPEED INDOOR FAN MOTOR (cont.)

UNIT	NOM. V–Ph–Hz	IFM TYPE	NO C.O. or UNPWR C.O.								w/ PWRD C.O.							
			NO P.E.				w/ P.E. (pwrd fr/ unit)				NO P.E.				w/ P.E. (pwrd fr/ unit)			
			MCA	MAX FUSE or HACR BRKR	DISC. SIZE		MCA	MAX FUSE or HACR BRKR	DISC. SIZE		MCA	MAX FUSE or HACR BRKR	DISC. SIZE		MCA	MAX FUSE or HACR BRKR	DISC. SIZE	
					FLA	LRA			FLA	LRA			FLA	LRA			FLA	LRA
48TC*D14 (2–stage cool) Units built on or prior to 02/15/2015	208/230–3–60	STD	62/62	80/80	64/64	376	66/66	80/80	69/69	380	67/67	80/80	70/70	381	71/71	80/80	74/74	385
		MED	64	80	67	390	68	80	71	394	69	80	72	395	73	80	77	399
		HIGH	67/66	80/80	70/69	392	71/70	80/80	75/74	396	–	–	–	–	–	–	–	–
	460–3–60	STD	31	40	32	189	33	40	34	191	33	40	34	191	35	40	36	193
		MED	32	40	33	196	34	40	35	198	34	40	36	198	36	45	38	200
		HIGH	33	40	34	197	35	40	36	199	35	45	37	199	37	45	39	201
	575–3–60	STD	23	30	23	142	27	30	28	146	24	30	25	144	28	30	30	148
		MED	23	30	23	142	27	30	28	146	24	30	25	144	28	30	30	148
		HIGH	26	30	27	156	29	35	31	160	27	30	29	158	31	35	33	162
48TC*D16	208/230–3–60	STD	70/70	80/80	72/72	412	73/73	80/80	77/77	416	74/74	90/90	78/78	417	78/78	100/100	82/82	421
		MED	72	80	75	426	76	100	79	430	77	100	80	431	80	100	85	435
		HIGH	82	100	86	432	85	100	91	436	86	100	92	437	90	100	96	441
	460–3–60	STD	35	45	36	242	37	45	38	244	37	45	39	244	39	50	41	246
		MED	36	45	38	249	38	50	40	251	39	50	40	251	40	50	42	253
		HIGH	41	50	43	252	43	50	45	254	43	50	46	254	45	50	48	256
	575–3–60	STD	27	30	28	184	31	40	32	188	29	35	30	186	32	40	34	190
		MED	27	30	28	184	31	40	32	188	29	35	30	186	32	40	34	190
		HIGH	33	40	35	196	37	45	39	200	35	40	37	198	39	45	41	202

LEGEND:

BRKR	–	Circuit breaker
CO	–	Convenience outlet
DISC	–	Disconnect
FLA	–	Full load amps
IFM	–	Indoor fan motor
LRA	–	Locked rotor amps
MCA	–	Minimum circuit amps
MOCP	–	MAX FUSE or HACR Breaker
PE	–	Power exhaust
PWRD CO	–	Powered convenient outlet
UNPWR CO	–	Unpowered convenient outlet

NOTES:

1. In compliance with NEC requirements for multimotor and combination load equipment (refer to NEC Articles 430 and 440), the overcurrent protective device for the unit shall be fuse or HACR breaker. Canadian units may be fuse or circuit breaker.
2. **Unbalanced 3-Phase Supply Voltage**
   Never operate a motor where a phase imbalance in supply voltage is greater than 2%. Use the following formula to determine the percentage of voltage imbalance.

$$\text{\% Voltage Imbalance} = 100 \times \frac{\text{max voltage deviation from average voltage}}{\text{average voltage}}$$

Example: Supply voltage is 230-3-60

AB = 224 v
BC = 231 v
AC = 226 v

$$\text{Average Voltage} = \frac{(224 + 231 + 226)}{3} = \frac{681}{3}$$

$$= 227$$

Determine maximum deviation from average voltage.
(AB) 227 – 224 = 3 v
(BC) 231 – 227 = 4 v
(AC) 227 – 226 = 1 v
Maximum deviation is 4 v.
Determine percent of voltage imbalance.

$$\text{\% Voltage Imbalance} = 100 \times \frac{4}{227}$$

$$= 1.76\%$$

This amount of phase imbalance is satisfactory as it is below the maximum allowable 2%.
IMPORTANT: If the supply voltage phase imbalance is more than 2%, contact your local electric utility company immediately.

ELECTRICAL INFORMATION cont.

Table 78 – UNIT WIRE/FUSE OR HACR BREAKER SIZING DATA WITH 2 SPEED INDOOR FAN MOTOR

UNIT	NOM. V–Ph–Hz	IFM TYPE	NO C.O. or UNPWR C.O.								w/ PWRD C.O.							
			NO P.E.				w/ P.E. (pwrd fr/ unit)				NO P.E.				w/ P.E. (pwrd fr/ unit)			
			MCA	MAX FUSE or HACR BRKR	DISC. SIZE		MCA	MAX FUSE or HACR BRKR	DISC. SIZE		MCA	MAX FUSE or HACR BRKR	DISC. SIZE		MCA	MAX FUSE or HACR BRKR	DISC. SIZE	
					FLA	LRA			FLA	LRA			FLA	LRA			FLA	LRA
48TC*D08	208/230–3–60	STD	40/40	50/50	41/41	197	44/43	50/50	46/46	201	45/44	50/50	47/47	202	48/48	60/60	51/51	206
		MED	43/42	50/50	45/44	227	46/46	50/50	49/48	231	47/47	60/50	50/49	232	51/50	60/60	55/54	236
		HIGH	48/47	60/50	50/49	262	51/51	60/60	55/54	266	52/52	60/60	56/55	267	56/55	60/60	60/59	271
	460–3–60	STD	19	20	19	97	20	25	21	99	21	25	22	99	23	25	24	101
		MED	20	25	20	113	21	25	22	115	22	25	23	115	24	25	25	117
		HIGH	22	25	23	130	24	30	25	132	24	30	26	132	26	30	28	134
	575–3–60	STD	14	15	14	79	18	20	19	83	16	20	16	81	19	25	21	85
		MED	16	20	16	92	19	25	21	96	17	20	18	94	21	25	23	98
		HIGH	18	20	18	106	22	25	23	110	20	25	20	108	23	25	24	112
48TC*D09	208/230–3–60	STD	41/41	50/50	43/42	212	45/45	50/50	47/47	216	46/46	50/50	48/48	217	50/49	60/60	52/52	221
		MED	42/42	50/50	44/44	216	46/46	60/50	48/48	220	47/47	60/60	50/49	221	51/51	60/60	54/54	225
		HIGH	46/45	60/50	48/47	266	50/49	60/60	53/52	270	51/50	60/60	54/53	271	55/54	60/60	58/57	275
	460–3–60	STD	19	25	20	111	21	25	22	113	21	25	22	113	23	25	24	115
		MED	20	25	21	114	22	25	23	116	22	25	23	116	24	30	25	118
		HIGH	21	25	22	139	23	25	24	141	23	25	24	141	25	30	26	143
	575–3–60	STD	17	20	17	87	21	25	21	91	18	20	19	89	22	25	23	93
		MED	17	20	18	91	21	25	22	95	19	25	20	93	23	25	24	97
		HIGH	18	20	19	100	22	25	23	104	20	25	21	102	24	30	25	106
48TC*D12	208/230–3–60	STD	46/46	60/60	48/47	255	50/50	60/60	52/52	259	51/51	60/60	53/53	260	55/54	60/60	58/57	264
		MED	50/49	60/60	52/51	305	54/53	60/60	56/55	309	55/54	60/60	58/56	310	58/57	70/70	62/61	314
		HIGH	53/52	60/60	55/54	316	56/55	60/60	60/59	320	57/56	70/60	61/60	321	61/60	70/70	65/64	325
	460–3–60	STD	23	30	24	122	25	30	26	124	25	30	26	124	27	30	29	126
		MED	24	30	25	147	26	30	27	149	26	30	28	149	28	30	30	151
		HIGH	26	30	27	152	28	30	29	154	28	30	29	154	30	35	32	156
	575–3–60	STD	18	20	19	95	22	25	23	99	20	25	21	97	24	25	25	101
		MED	19	25	20	104	23	25	24	108	21	25	22	106	25	30	26	110
		HIGH	21	25	22	118	25	30	26	122	23	25	24	120	26	30	28	124

ELECTRICAL INFORMATION cont.

Table 78 - UNIT WIRE/FUSE OR HACR BREAKER SIZING DATA WITH 2 SPEED INDOOR FAN MOTOR (cont.)

UNIT	NOM. V–Ph–Hz	IFM TYPE	NO C.O. or UNPWR C.O.								w/ PWRD C.O.							
			NO P.E.				w/ P.E. (pwrd fr/ unit)				NO P.E.				w/ P.E. (pwrd fr/ unit)			
			MCA	MAX FUSE or HACR BRKR	DISC. SIZE		MCA	MAX FUSE or HACR BRKR	DISC. SIZE		MCA	MAX FUSE or HACR BRKR	DISC. SIZE		MCA	MAX FUSE or HACR BRKR	DISC. SIZE	
					FLA	LRA			FLA	LRA			FLA	LRA			FLA	LRA
48TC*D14 (2–stage cool) Units built on or after 02/16/2015	208/230–3–60	STD	63/62	80/80	65/64	370	67/66	80/80	70/69	374	68/67	80/80	71/70	375	71/71	80/80	75/74	379
		MED	65/64	80/80	68/67	394	69/68	80/80	72/71	398	70/69	80/80	73/72	399	74/73	80/80	78/77	403
		HIGH	68/67	80/80	71/70	405	72/71	80/80	75/74	409	Not available							
	460–3–60	STD	29	35	30	184	31	40	32	186	31	40	32	186	33	40	34	188
		MED	30	40	31	196	32	40	33	198	32	40	33	198	34	45	35	200
		HIGH	31	40	33	201	33	40	35	203	34	40	35	203	35	40	37	205
	575–3–60	STD	24	30	24	147	27	30	29	151	25	30	26	149	29	35	31	153
		MED	24	30	24	147	27	30	29	151	25	30	26	149	29	35	31	153
		HIGH	25	30	26	161	29	35	31	165	27	30	28	163	31	35	33	167
48TC*D14 (2–stage cool) Units built on or prior to 02/15/2015	208/230–3–60	STD	62/61	80/80	65/64	357	66/65	80/80	69/68	361	67/66	80/80	70/69	362	71/70	80/80	75/74	366
		MED	64/63	80/80	67/66	381	68/67	80/80	72/70	385	69/68	80/80	73/72	386	73/72	80/80	77/76	390
		HIGH	67/66	80/80	70/69	392	71/70	80/80	75/74	396	Not available							
	460–3–60	STD	30	40	31	180	32	40	33	182	33	40	34	182	34	40	36	184
		MED	31	40	33	192	33	40	35	194	34	40	35	194	35	45	37	196
		HIGH	33	40	34	197	35	40	36	199	35	45	37	199	37	45	39	201
	575–3–60	STD	24	30	25	142	28	30	30	146	26	30	27	144	30	35	32	148
		MED	24	30	25	142	28	30	30	146	26	30	27	144	30	35	32	148
		HIGH	26	30	27	156	30	35	32	160	28	30	29	158	32	35	34	162
48TC*D16	208/230–3–60	STD	70/69	80/80	73/72	393	74/73	80/80	77/76	397	75/74	90/80	78/77	398	78/78	100/100	82/82	402
		MED	72/71	80/80	75/74	417	76/75	100/90	79/78	421	77/76	100/100	81/79	422	81/80	100/100	85/84	426
		HIGH	82	100	86	432	85	100	91	436	86	100	92	437	90	100	96	441
	460–3–60	STD	35	45	36	233	37	45	38	235	37	45	38	235	39	50	40	237
		MED	36	45	37	245	38	50	39	247	38	50	40	247	40	50	42	249
		HIGH	41	50	43	252	43	50	45	254	43	50	46	254	45	50	48	256
	575–3–60	STD	29	35	30	184	32	40	34	188	30	35	32	186	34	40	36	190
		MED	29	35	30	184	32	40	34	188	30	35	32	186	34	40	36	190
		HIGH	33	40	35	196	37	45	39	200	35	40	37	198	39	45	41	202

SEQUENCE OF OPERATION

General

The sequence below describes the sequence of operation for an electromechanical unit with and without a factory installed EconoMi$er IV and X (called "economizer" in this sequence). For information regarding a direct digital controller, see the start-up, operations, and troubleshooting manual for the applicable controller.

Electromechanical units with no economizer

Cooling (Single speed indoor fan motor) —

When the thermostat calls for cooling, terminals G and Y1 are energized. As a result, the indoor fan contactor (IFC) and the compressor contactor (C1) are energized, causing the indoor fan motor (IFM), compressor #1, and outdoor fan to start. If the unit has 2 stages of cooling, the thermostat will additionally energize Y2. The Y2 signal will energize compressor contactor #2 (C2), causing compressor #2 to start. Regardless of the number of stages, the outdoor fan motor runs continuously while unit is cooling. When SAV system is utilized, indoor fan motor runs at design CFM (full speed) during the heating operation.

Cooling (2-speed indoor fan motor) —

Per ASHRAE 90.1 standard section 6.4.3.10.b, during the first stage of cooling operation the VFD will adjust the fan motor to provide 2/3rd of the total cfm established for the unit. When a call for the second stage of cooling is required, the VFD will allow the total cfm for the unit established (100%).

Heating (Single or 2-speed indoor fan motor) —

NOTE: WeatherMaker (48TC) units have either 1 or 2 stages of gas heat. When SAV system is utilized, indoor fan motor runs at design cfm (full speed) during the heating operation.

When the thermostat calls for heating, power is sent to W on the Integrated Gas Controller (IGC) board. An LED (light-emitting diode) on the IGC board turns on and remains on during normal operation. A check is made to ensure that the rollout switch and limit switch are closed. If the check was successful, the induced-draft motor is energized, and when its speed is satisfactory, as proven by the "hall effect" sensor, the ignition activation period begins. The burners will ignite within 5 seconds. If the burners do not light, there is a 22-second delay before another 5-second attempt. This sequence is repeated for 15 minutes or until the burners light. If, after the 15 minutes, the burners still have not lit, heating is locked out. To reset the control, break 24-v power to the thermostat.

When ignition occurs, the IGC board will continue to monitor the condition of the rollout switch, the limit switches, the "hall effect" sensor, as well as the flame sensor. 45 seconds after ignition occurs, assuming the unit is controlled through a room thermostat set for fan auto, the indoor fan motor will energize (and the outdoor air dampers will open to their minimum position). If, for some reason, the over-temperature limit opens prior to the start of the indoor fan blower, the unit will shorten the 45-second delay to 5 seconds less than the time from initiation of heat to when the limit tripped. Gas will not be interrupted to the burners and heating will continue. Once the fan-on delay has been modified, it will not change back to 45 seconds until power is reset to the control.

On units with 2 stages of heat, when additional heat is required, W2 closes and initiates power to the second stage of the main gas valve. When the thermostat is satisfied, W1 and W2 open and the gas valve closes, interrupting the flow of gas to the main burners.

If the call for W1 lasted less than 1 minute, the heating cycle will not terminate until 1 minute after W1 became active. If the unit is controlled through a room thermostat set for fan auto, the indoor fan motor will continue to operate for an additional 45 seconds then stop. If the over-temperature limit opens after the indoor motor is stopped, but within 10 minutes of W1 becoming inactive, on the next cycle the time will be extended by 15 seconds. The maximum delay is 3 minutes. Once modified, the fan off delay will not change back to 45 seconds unless power is reset to the control. A LED indicator is provided on the IGC to monitor operation.

Electromechanical units with an economizer

Cooling —

When free cooling is not available, the compressors will be controlled by the zone thermostat. When free cooling is available, the outdoor air damper is modulated by the EconoMi$er IV and X control to provide a 50°F (10°C) to 55°F (13°C) mixed air temperature into the zone. As the mixed air temperature fluctuates above 55°F (13°C)or below 50°F (10°C) dampers will be modulated (open or close) to bring the mixed air temperature back within control. If mechanical cooling is utilized with free cooling, the outdoor air damper will maintain its current position at the time the compressor is started. If the increase in cooling capacity causes the mixed air temperature to drop below 45°F (7°C), then the outdoor air damper position will be decreased to the minimum position. If the mixed air temperature continues to fall, the outdoor air damper will close. Control returns to normal once the mixed air temperature rises above 48°F (9°C). The power exhaust fans will be energized and de-energized, if installed, as the outdoor air damper opens and closes.

If field installed accessory CO_2 sensors are connected to the EconoMi$er IV and X control, a demand controlled ventilation strategy will begin to operate. As the CO_2 level in the zone increases above the CO_2 setpoint, the minimum position of the damper will be increased proportionally. As the CO_2 level decreases because of the increase in fresh air, the outdoor air damper will be proportionally closed. For EconoMi$er IV and X operation, there must be a thermostat call for the fan (G).

If the unit is occupied and the fan is on, the damper will operate at minimum position. Otherwise, the damper will be closed.

If field installed accessory CO_2 sensors are connected to the EconoMi$er IV and X control, a demand controlled ventilation strategy will begin to operate. As the CO_2 level in the zone increases above the CO_2 setpoint, the minimum position of the damper will be increased proportionally. As the CO_2 level decreases because of the increase in fresh air, the outdoor air damper will be proportionally closed. For EconoMi$er IV and X operation, there must be a thermostat call for the fan (G). If the unit is occupied and the fan is on, the damper will operate at minimum position. Otherwise, the damper will be closed.

When the EconoMi$er IV and X control is in the occupied mode and a call for cooling exists (Y1 on the thermostat), the control will first check for indoor fan operation. If the fan is not on, then cooling will not be activated. If the fan is on, then the control will open the EconoMi$er IV and X damper to the minimum position.

On the initial power to the EconoMi$er IV and X control, it will take the damper up to 2 1/2 minutes before it begins to position itself. After the initial power-up, further changes in damper position can take up to 30 seconds to initiate. Damper movement from full closed to full open (or vice versa) will take between 1 1/2 and 2 1/2 minutes. If free cooling can be used as determined from the appropriate changeover command (switch, dry bulb, enthalpy curve, differential dry bulb, or differential enthalpy), then the control will modulate the dampers open to maintain the mixed air temperature setpoint at 50°F (10°C) to 55°F (13°C). If there is a further demand for cooling (cooling second stage - Y2 is energized), then the control will bring on compressor stage 1 to maintain the mixed air temperature setpoint. The EconoMi$er IV and X damper will be open at maximum position.

2-Speed Note: When operating in ventilation mode only, the indoor fan motor will automatically adjust to 2/3rd of the total cfm established.

Heating

The sequence of operation for the heating is the same as an electromechanical unit with no economizer. The only difference is how the economizer acts. The economizer will stay at the Economizer Minimum Position while the evaporator fan is operating. The outdoor air damper is closed when the indoor fan is not operating.

Optional Humidi-MiZer Dehumidification System

Units with the factory equipped Humidi-MiZer option are capable of providing multiple modes of improved dehumidification as a variation of the normal cooling cycle. The Humidi-MiZer option includes additional valves in the liquid line and discharge line of each refrigerant circuit, a small reheat condenser coil downstream of the evaporator, and Motormaster variable-speed control of some or all outdoor fans. Operation of the revised refrigerant circuit for each mode is described below.

The Humidi-MiZer system provides three sub-modes of operation: Cool, Reheat1, and Reheat2.

Cool mode - provides a normal ratio of Sensible and Latent Cooling effect from the evaporator coil.

Reheat1 - provides increased Latent Cooling while slightly reducing the Sensible Cooling effect.

Reheat2 - provides normal Latent Cooling but with null or minimum Sensible Cooling effect delivered to the space.

The Reheat1 and Reheat2 modes are available when the unit is not in a Heating mode and when the Low Ambient Lockout switch is closed.

The following diagrams depict piping for Single Stage cooling units.

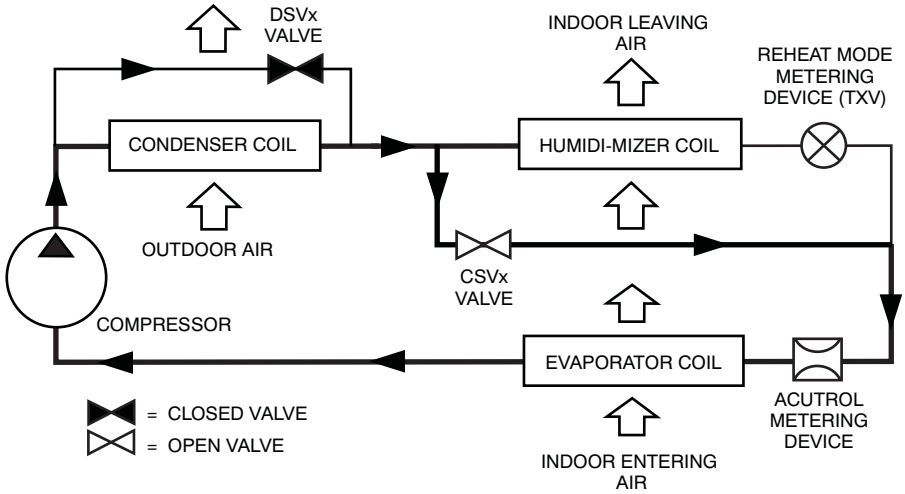

C12647

Normal Cooling Mode - Humidi-MiZer System with Single Stage Cooling

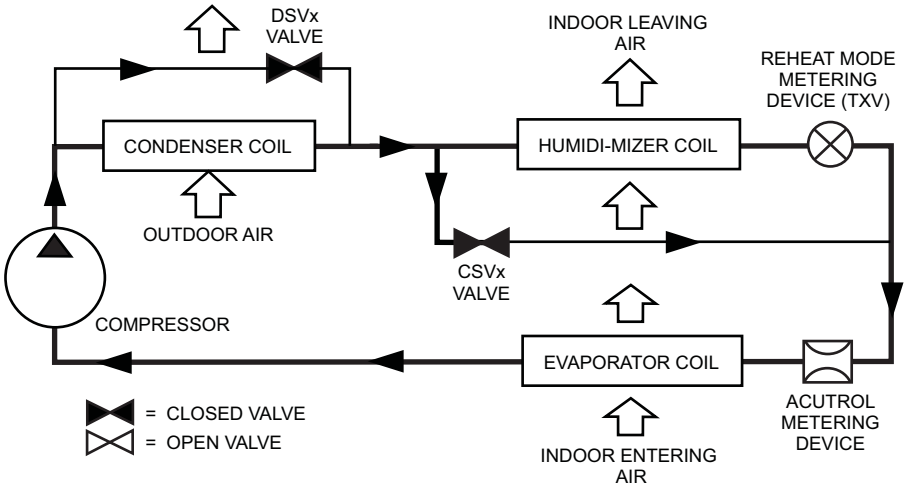

C12648

Subcooling Mode (Reheat 1) - Humidi-MiZer System with Single Stage Cooling

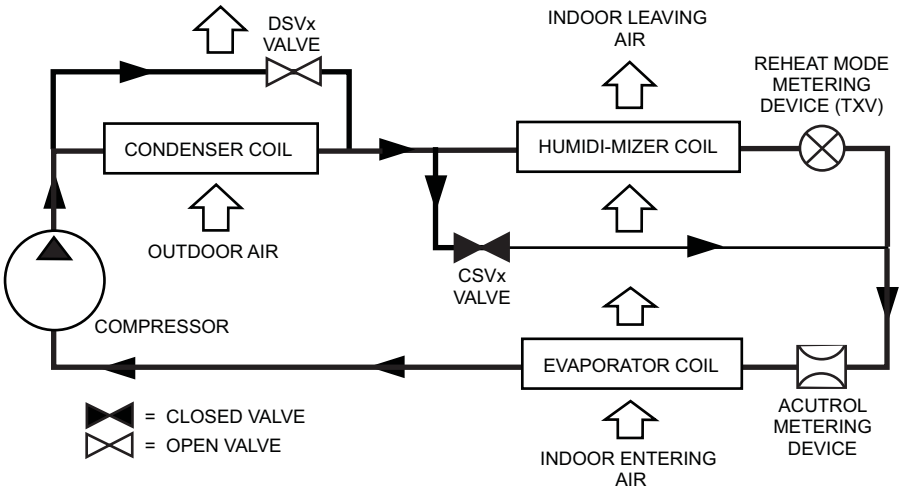

C12649

Hot Gas Reheat Mode (Reheat 2) - Humidi-MiZer System with Single Stage Cooling

GUIDE SPECIFICATIONS - 48TC**04-16

Gas Heat/Electric Cooling Packaged Rooftop

HVAC Guide Specifications

Size Range: **3 to 15 Nominal Tons**

Section **Description**

23 06 80 Schedules for Decentralized HVAC Equipment

23 06 80.13 Decentralized Unitary HVAC Equipment Schedule

23 06 80.13.A. Rooftop unit schedule

1. Schedule is per the project specification requirements.

23 07 16 HVAC Equipment Insulation

23 07 16.13 Decentralized, Rooftop Units:

23 07 16.13.A. Evaporator fan compartment:

1. Interior cabinet surfaces shall be insulated with a minimum 1/2-in. thick, minimum 1 1/2 lb density, flexible fiberglass insulation bonded with a phenolic binder, neoprene coated on the air side.
2. Insulation and adhesive shall meet NFPA 90A requirements for flame spread and smoke generation.

23 07 16.13.B. Gas heat compartment:

1. Aluminum foil-faced fiberglass insulation shall be used.
2. Insulation and adhesive shall meet NFPA 90A requirements for flame spread and smoke generation.

23 09 13 Instrumentation and Control Devices for HVAC

23 09 13.23 Sensors and Transmitters

23 09 13.23.A. Thermostats

1. Thermostat must
   a. energize both “W” and “G” when calling for heat.
   b. have capability to energize 2 different stages of cooling, and 2 different stages of heating.
   c. include capability for occupancy scheduling.

23 09 23 Direct-digital Control system for HVAC

23 09 23.13 Decentralized, Rooftop Units:

23 09 23.13.A. PremierLink controller

1. Shall be ASHRAE 62 compliant.
2. Shall accept 18-32 VAC input power.
3. Shall have an operating temperature range from -40°F (-40°C) to 158°F (70°C), 10% - 95% RH (non-condensing).
4. Shall include an integrated economizer controller to support an economizer with 4 to 20 mA actuator input and no microprocessor controller.
5. Controller shall accept the following inputs: space temperature, setpoint adjustment, outdoor air temperature, indoor air quality, outdoor air quality, indoor relative humidity, compressor lock-out, fire shutdown, enthalpy, fan status, remote time clock/door switch.
6. Shall accept a CO_2 sensor in the conditioned space, and be Demand Control Ventilation (DCV) ready.
7. Shall provide the following outputs: economizer, fan, cooling stage 1, cooling stage 2, heat stage 1, heat stage 2, heat stage 3/ exhaust/ reversing valve/ dehumidify/ occupied.
8. Unit shall provide surge protection for the controller through a circuit breaker.
9. Shall be Internet capable, and communicate at a Baud rate of 38.4K or faster
10. Shall have an LED display independently showing the status of activity on the communication bus, and processor operation.
11. Shall include an EIA-485 protocol communication port, an access port for connection of either a computer or a Carrier technician tool, an EIA-485 port for network communication to intelligent space sensors and displays, and a port to connect an optional LonWorks plug-in communications card.
12. Shall have built-in Carrier Comfort Network™ (CCN) protocol, and be compatible with other CCN devices, including ComfortLink™ and ComfortVIEW™ controllers.
13. Shall have built-in support for Carrier technician tool.

14. Software upgrades will be accomplished by local download. Software upgrades through chip replacements are not allowed.
15. Shall be shock resistant in all planes to 5G peak, 11ms during operation, and 100G peak, 11ms during storage.
16. Shall be vibration resistant in all planes to 1.5G @ 20-300 Hz.
17. Shall support a bus length of 4000 ft (1219m) max, 60 devices per 1000 ft (305m) section, and 1 RS-485 repeater per 1000 ft (305m) sections.

23 09 23.13.B. RTU Open - Open protocol, direct digital controller:

1. Shall be ASHRAE 62 compliant.
2. Shall accept 18-30VAC, 50-60Hz, and consumer 15VA or less power.
3. Shall have an operating temperature range from -40°F (-40°C) to 130°F (54°C), 10% - 90% RH (non-condensing).
4. Shall include built-in protocol for BACNET (MS/TP and PTP modes), Modbus (RTU and ASCII), Johnson N2 and LonWorks. LonWorks Echelon processor required for all Lon applications shall be contained in separate communication board.
5. Shall allow access of up to 62 network variables (SNVT). Shall be compatible with all open controllers.
6. Baud rate Controller shall be selectable using a dipswitch.
7. Shall have an LED display independently showing the status of serial communication, running, errors, power, all digital outputs, and all analog inputs.
8. Shall accept the following inputs: space temperature, setpoint adjustment, outdoor air temperature, indoor air quality, outdoor air quality, compressor lock-out, fire shutdown, enthalpy switch, and fan status/filter status/ humidity/ remote occupancy.
9. Shall provide the following outputs: economizer, variable frequency drive, fan, cooling stage 1, cooling stage 2, heat stage 1, heat stage 2, exhaust reversing valve/high fan speed.
10. Shall have built-in surge protection circuitry through solid state polyswitches. Polyswitches shall be used on incoming power and network connections. Polyswitches will return to normal when the “trip” condition clears.
11. Shall have a battery back-up capable of a minimum of 10,000 hours of data and time clock retention during power outages.
12. Shall have built-in support for Carrier technician tool.
13. Shall include an EIA-485 protocol communication port, an access port for connection of either a computer or a Carrier technician tool, an EIA-485 port for network communication to intelligent space sensors and displays, and a port to connect an optional LonWorks communications card.
14. Software upgrades will be accomplished by either local or remote download. No software upgrades through chip replacements are allowed.

23 09 33 Electric and Electronic Control System for HVAC

23 09 33.13 Decentralized, Rooftop Units:

23 09 33.13.A. General:

1. Shall be complete with self-contained low-voltage control circuit protected by a resettable circuit breaker on the 24-v transformer side. Transformer shall have 75VA capability.
2. Shall utilize color-coded wiring.
3. Shall include a central control terminal board to conveniently and safely provide connection points for vital control functions such as: smoke detectors, phase monitor, gas controller, economizer, thermostat, DDC control options, and low and high pressure switches.
4. The heat exchanger shall be controlled by an integrated gas controller (IGC) microprocessor. See heat exchanger section of this specification.
5. Unit shall include a minimum of one 8-pin screw terminal connection board for connection of control wiring.

23 09 33.23.B. Safeties:

1. Compressor over-temperature, over-current. High internal pressure differential.
2. Low pressure switch.
   a. Units with 2 compressors shall have different sized connectors for the circuit 1 and circuit 2 low and high pressure switches. They shall physically prevent the cross-wiring of the safety switches between circuits 1 and 2.
   b. Low pressure switch shall use different color wire than the high pressure switch. The purpose is to assist the installer and service technician to correctly wire and or troubleshoot the rooftop unit.

3. High pressure switch.
   a. Units with 2 compressors shall have different sized connectors for the circuit 1 and circuit 2 low and high pressure switches. They shall physically prevent the cross-wiring of the safety switches between circuits 1 and 2.
   b. High pressure switch shall use different color wire than the low pressure switch. The purpose is to assist the installer and service technician to correctly wire and or troubleshoot the rooftop unit.
4. Automatic reset, motor thermal overload protector.
5. Heating section shall be provided with the following minimum protections:
   a. High temperature limit switches.
   b. Induced draft motor speed sensor.
   c. Flame rollout switch.
   d. Flame proving controls.

23 09 93 Sequence of Operations for HVAC Controls

23 09 93.13 Decentralized, Rooftop Units:

23 09 93.13 INSERT SEQUENCE OF OPERATION

23 40 13 Panel Air Filters

23 40 13.13 Decentralized, Rooftop Units:

23 40 13.13.A. Standard filter section

1. Shall consist of factory installed, low velocity, disposable 2-in. thick fiberglass filters of commercially available sizes.
2. Unit shall use only one filter size. Multiple sizes are not acceptable.
3. Filters shall be accessible through an access panel with “no-tool” removal as described in the unit cabinet section of this specification (23 81 19.13.H).

23 81 19 Self-Contained Air Conditioners

23 81 19.13 Small-Capacity Self-Contained Air Conditioners (48TC**04-16)

23 81 19.13.A. General

1. Outdoor, rooftop mounted, electrically controlled, heating and cooling unit utilizing a fully hermetic scroll compressor(s) for cooling duty and gas combustion for heating duty.
2. Factory assembled, single-piece heating and cooling rooftop unit. Contained within the unit enclosure shall be all factory wiring, piping, controls, and special features required prior to field start-up.
3. Unit shall use Puron refrigerant.
4. Unit shall be installed in accordance with the manufacturer’s instructions.
5. Unit must be selected and installed in compliance with local, state, and federal codes.

23 81 19.13.B. Quality Assurance

1. Unit meets ASHRAE 90.1 minimum efficiency requirements.
2. Unit shall be rated in accordance with AHRI Standards 210/240 and 340/360.
3. Unit shall be designed to conform to ASHRAE 15.
4. Unit shall be UL-tested and certified in accordance with ANSI Z21.47 Standards and UL-listed and certified under Canadian standards as a total package for safety requirements.
5. Insulation and adhesive shall meet NFPA 90A requirements for flame spread and smoke generation.
6. Unit casing shall be capable of withstanding 500-hour salt spray exposure per ASTM B117 (scribed specimen).
7. Unit shall be designed in accordance with ISO 9001, and shall be manufactured in a facility registered by ISO 9001.
8. Roof curb shall be designed to conform to NRCA Standards.
9. Unit shall be subjected to a completely automated run test on the assembly line. The data for each unit will be stored at the factory, and must be available upon request.
10. Unit shall be designed in accordance with UL Standard 1995, including tested to withstand rain.
11. Unit shall be constructed to prevent intrusion of snow and tested to prevent snow intrusion into the control box up to 40 mph.
12. Unit shake tested to assurance level 1, ASTM D4169 to ensure shipping reliability.
13. High Efficient Motors listed shall meet section 313 of the Energy Independence and Security Act of 2007 (EISA 2007)

23 81 19.13.C. Delivery, Storage, and Handling

1. Unit shall be stored and handled per manufacturer’s recommendations.

2. Lifted by crane requires either shipping top panel or spreader bars.
3. Unit shall only be stored or positioned in the upright position.

23 81 19.13.E. Project Conditions

1. As specified in the contract.

23 81 19.13.F. Operating Characteristics

1. Unit shall be capable of starting and running at 115°F (46°C) ambient outdoor temperature, meeting maximum load criteria of AHRI Standard 210/240 or 340/360 at ± 10% voltage.
2. Compressor with standard controls shall be capable of operation down to 40°F (4°C), ambient outdoor temperatures. Accessory winter start kit is necessary if mechanically cooling at ambient temperatures down to 25°F (-4°C).
3. Unit shall discharge supply air vertically or horizontally as shown on contract drawings.
4. Unit shall be factory configured for vertical supply & return configurations.
5. Unit shall be field convertible from vertical to horizontal airflow on all models. No special kit required on 04-14 models. Supply duct kit required for 16 size model only.
6. Unit shall be capable of mixed operation: vertical supply with horizontal return or horizontal supply with vertical return.

23 81 19.13.G. Electrical Requirements

1. Main power supply voltage, phase, and frequency must match those required by the manufacturer.

23 81 19.13.H. Unit Cabinet

1. Unit cabinet shall be constructed of galvanized steel, and shall be bonderized and coated with a prepainted baked enamel finish on all externally exposed surfaces.
2. Unit cabinet exterior paint shall be: film thickness, (dry) 0.003 inches minimum, gloss (per ASTM D523, 60°F / 16°C): 60, Hardness: H-2H Pencil hardness.
3. Evaporator fan compartment interior cabinet insulation shall conform to AHRI Standards 210/240 or 340/360 minimum exterior sweat criteria. Interior surfaces shall be insulated with a minimum 1/2-in. thick, 1 lb density, flexible fiberglass insulation, neoprene coated on the air side. Aluminum foil-faced fiberglass insulation shall be used in the gas heat compartment.
4. Base of unit shall have a minimum of four locations for thru-the-base gas and electrical connections (factory installed or field installed), standard.
5. Base Rail
   a. Unit shall have base rails on a minimum of 2 sides.
   b. Holes shall be provided in the base rails for rigging shackles to facilitate maneuvering and overhead rigging.
   c. Holes shall be provided in the base rail for moving the rooftop by fork truck.
   d. Base rail shall be a minimum of 16 gauge thickness.
6. Condensate pan and connections:
   a. Shall be a sloped condensate drain pan made of a non-corrosive material.
   b. Shall comply with ASHRAE Standard 62.
   c. Shall use a 3/4" -14 NPT drain connection, possible either through the bottom or side of the drain pan. Connection shall be made per manufacturer's recommendations.
7. Top panel:
   a. Shall be a single piece top panel on 04 thru 12 sizes, two piece on 14 and 16 sizes.
8. Gas Connections:
   a. All gas piping connecting to unit gas valve shall enter the unit cabinet at a single location on side of unit (horizontal plane).
   b. Thru-the-base capability
      (1.) Standard unit shall have a thru-the-base gas-line location using a raised, embossed portion of the unit basepan.
      (2.) Optional, factory approved, water-tight connection method must be used for thru-the-base gas connections.
      (3.) No basepan penetration, other than those authorized by the manufacturer, is permitted.
9. Electrical Connections
   a. All unit power wiring shall enter unit cabinet at a single, factory prepared, knockout location.
   b. Thru-the-base capability.
      (1.) Standard unit shall have a thru-the-base electrical location(s) using a raised, embossed portion of the unit basepan.
      (2.) Optional, factory approved, water-tight connection method must be used for thru-the-base electrical connections.

(3.) No basepan penetration, other than those authorized by the manufacturer, is permitted.

10. Component access panels (standard)
    a. Cabinet panels shall be easily removable for servicing.
    b. Unit shall have one factory installed, tool-less, removable, filter access panel.
    c. Panels covering control box, indoor fan, indoor fan motor, gas components (where applicable), and compressors shall have molded composite handles.
    d. Handles shall be UV modified, composite. They shall be permanently attached, and recessed into the panel.
    e. Screws on the vertical portion of all removable access panel shall engage into heat resistant, molded composite collars.
    f. Collars shall be removable and easily replaceable using manufacturer recommended parts.

23 81 19.13.I. Gas Heat

1. General
    a. Heat exchanger shall be an induced draft design. Positive pressure heat exchanger designs shall not be allowed.
    b. Shall incorporate a direct-spark ignition system and redundant main gas valve.
    c. Gas supply pressure at the inlet to the rooftop unit gas valve must match that required by the manufacturer.
2. The heat exchanger shall be controlled by an integrated gas controller (IGC) microprocessor.
    a. IGC board shall notify users of fault using an LED (light-emitting diode).
    b. IGC board shall contain algorithms that modify evaporator fan operation to prevent future cycling on high temperature limit switch.
    c. Unit shall be equipped with anti-cycle protection with one short cycle on unit flame rollout switch or 4 continuous short cycles on the high temperature limit switch. Fault indication shall be made using an LED.
3. Standard Heat Exchanger construction
    a. Heat exchanger shall be of the tubular-section type constructed of a minimum of 20-gauge steel coated with a nominal 1.2 mil aluminum-silicone alloy for corrosion resistance.
    b. Burners shall be of the in-shot type constructed of aluminum-coated steel.
    c. Burners shall incorporate orifices for rated heat output up to 2000 ft (610m) elevation. Additional accessory kits may be required for applications above 2000 ft (610m) elevation, depending on local gas supply conditions.
    d. Each heat exchanger tube shall contain multiple dimples for increased heating effectiveness.
4. Optional Stainless Steel Heat Exchanger construction
    a. Use energy saving, direct-spark ignition system.
    b. Use a redundant main gas valve.
    c. Burners shall be of the in-shot type constructed of aluminum-coated steel.
    d. All gas piping shall enter the unit cabinet at a single location on side of unit (horizontal plane).
    e. The optional stainless steel heat exchanger shall be of the tubular-section type, constructed of a minimum of 20-gauge type 409 stainless steel.
    f. Type 409 stainless steel shall be used in heat exchanger tubes and vestibule plate.
    g. Complete stainless steel heat exchanger allows for greater application flexibility.
5. Optional Low NO_x Heat Exchanger construction
    a. Low NO_x reduction shall be provided to reduce nitrous oxide emissions to meet California's Air Quality Management District (SCAQMD) low-NO_x emissions requirement of 40 nanograms per joule or less.
    b. Primary tubes and vestibule plates on low NO_x units shall be 409 stainless steel. Other components shall be aluminized steel.
6. Induced draft combustion motor and blower
    a. Shall be a direct-drive, single inlet, forward-curved centrifugal type.
    b. Shall be made from steel with a corrosion-resistant finish.
    c. Shall have permanently lubricated sealed bearings.
    d. Shall have inherent thermal overload protection.
    e. Shall have an automatic reset feature.

23 81 19.13.J. Coils

1. Standard Aluminum Fin - Copper Tube Coils:
    a. Standard evaporator and condenser coils shall have aluminum lanced plate fins mechanically bonded to seamless internally grooved copper tubes with all joints brazed.

b. Evaporator coils shall be leak tested to 150 psig, pressure tested to 450 psig, and qualified to UL 1995 burst test at 1775 psig.
c. Condenser coils shall be leak tested to 150 psig, pressure tested to 650 psig, and qualified to UL 1995 burst test at 1980 psig.

2. Optional Pre-coated aluminum-fin condenser coils (3 Phase Models Only):
   a. Shall have a durable epoxy-phenolic coating to provide protection in mildly corrosive coastal environments.
   b. Coating shall be applied to the aluminum fin stock prior to the fin stamping process to create an inert barrier between the aluminum fin and copper tube.
   c. Epoxy-phenolic barrier shall minimize galvanic action between dissimilar metals.
3. Optional Copper-fin evaporator and condenser coils (3 Phase Models Only):
   a. Shall be constructed of copper fins mechanically bonded to copper tubes and copper tube sheets.
   b. Galvanized steel tube sheets shall not be acceptable.
   c. A polymer strip shall prevent coil assembly from contacting the sheet metal coil pan to minimize potential for galvanic corrosion between coil and pan.
4. Optional E-coated aluminum-fin evaporator and condenser coils (3 Phase Models Only):
   a. Shall have a flexible epoxy polymer coating uniformly applied to all coil surface areas without material bridging between fins.
   b. Coating process shall ensure complete coil encapsulation of tubes, fins and headers.
   c. Color shall be high gloss black with gloss per ASTM D523-89.
   d. Uniform dry film thickness from 0.8 to 1.2 mil on all surface areas including fin edges.
   e. Superior hardness characteristics of 2H per ASTM D3363-92A and cross-hatch adhesion of 4B-5B per ASTM D3359-93.
   f. Impact resistance shall be up to 160 in.-lb (ASTM D2794-93).
   g. Humidity and water immersion resistance shall be up to minimum 1000 and 250 hours respectively (ASTM D2247-92 and ASTM D870-92).
   h. Corrosion durability shall be confirmed through testing to be no less than 1000 hours salt spray per ASTM B117-90.
5. Standard All Aluminum Novation Coils:
   a. Standard condenser coils shall have all aluminum NOVATION Heat Exchanger Technology design consisting of aluminum multi port flat tube design and aluminum fin. Coils shall be a furnace brazed design and contain epoxy lined shrink wrap on all aluminum to copper connections.
   b. Condenser coils shall be leak tested to 150 psig, pressure tested to 650 psig, and qualified to UL 1995 burst test at 1980 psig.
6. Optional E-coated aluminum-fin, aluminum tube condenser coils:
   a. Shall have a flexible epoxy polymer coating uniformly applied to all coil external surface areas without material bridging between fins or louvers.
   b. Coating process shall ensure complete coil encapsulation, including all exposed fin edges.
   c. E-coat thickness of 0.8 to 1.2 mil with top coat having a uniform dry film thickness from 1.0 to 2.0 mil on all external coil surface areas, including fin edges, shall be provided.
   d. Shall have superior hardness characteristics of 2H per ASTM D3363-00 and cross-hatch adhesion of 4B-5B per ASTM D3359-02.
   e. Shall have superior impact resistance with no cracking, chipping or peeling per NSF/ANSI 51-2002 Method 10.2.

23 81 19.13.K. Refrigerant Components

1. Refrigerant circuit shall include the following control, safety, and maintenance features:
   a. Fixed orifice metering system shall prevent mal-distribution of two-phase refrigerant by including multiple fixed orifice devices in each refrigeration circuit. Each orifice is to be optimized to the coil circuit it serves.
   b. Refrigerant filter drier - Solid core design.
   c. Service gauge connections on suction and discharge lines.
   d. Pressure gauge access through a specially designed access port in the top panel of the unit.
2. There shall be gauge line access port in the skin of the rooftop, covered by a black, removable plug.
   a. The plug shall be easy to remove and replace.
   b. When the plug is removed, the gauge access port shall enable maintenance personnel to route their pressure gauge lines.

c. This gauge access port shall facilitate correct and accurate condenser pressure readings by enabling the reading with the compressor access panel on.
d. The plug shall be made of a leak proof, UV-resistant, composite material.

3. Compressors
   a. Unit shall use fully hermetic, scroll compressor for each independent refrigeration circuit.
   b. Compressor motors shall be cooled by refrigerant gas passing through motor windings.
   c. Compressors shall be internally protected from high discharge temperature conditions.
   d. Compressors shall be protected from an over-temperature and over-amperage conditions by an internal, motor overload device.
   e. Compressor shall be factory mounted on rubber grommets.
   f. Compressor motors shall have internal line break thermal, current overload and high pressure differential protection.
   g. Crankcase heaters shall not be required for normal operating range, unless required by compressor manufacturer due to refrigerant charge limits.

23 81 19.13.L. Filter Section

1. Filters access is specified in the unit cabinet section of this specification.
2. Filters shall be held in place by a pivoting filter tray, facilitating easy removal and installation.
3. Shall consist of factory installed, low velocity, throw-away 2-in. thick fiberglass filters.
4. Filters shall be standard, commercially available sizes.
5. Only one size filter per unit is allowed.

23 81 19.13.M. Evaporator Fan and Motor

1. Evaporator fan motor:
   a. Shall have permanently lubricated bearings.
   b. Shall have inherent automatic-reset thermal overload protection or circuit breaker.
   c. Shall have a maximum continuous bhp rating for continuous duty operation; no safety factors above that rating shall be required.
2. Belt-driven Evaporator Fan:
   a. Belt drive shall include an adjustable pitch motor pulley.
   b. Shall use sealed, permanently lubricated ball-bearing type.
   c. Blower fan shall be double-inlet type with forward-curved blades.
   d. Shall be constructed from steel with a corrosion resistant finish and dynamically balanced.

23 81 19.13.N. Condenser Fans and Motors

1. Condenser fan motors:
   a. Shall be a totally enclosed motor.
   b. Shall use permanently lubricated bearings.
   c. Shall have inherent thermal overload protection with an automatic reset feature.
   d. Shall use a shaft-down design on 04 to 12 and 16 models and shaft-up on 14 size with rain shield.
2. Condenser Fans:
   a. Shall be a direct-driven propeller type fan.
   b. Shall have galvalum blades riveted to corrosion-resistant steel spiders and shall be dynamically balanced.

23 81 19.13.O. Special Features Options and Accessories

1. Staged Air Volume System (SAV) for 2-stage cooling models only:
   a. Evaporator fan motor:
      (1.) Shall have permanently lubricated bearings.
      (2.) Shall have a maximum continuous bhp rating for continuous duty operation; no safety factors above that rating.
      (3.) Shall be Variable Frequency duty and 2-speed control.
      (4.) Shall contain motor shaft grounding ring to prevent electrical bearing fluting damage by safely diverting harmful shaft voltages and bearing currents to ground.
2. Variable Frequency Drive (VFD). Only available on 2-speed indoor fan motor option (SAV):
   a. Shall be installed inside the unit cabinet, mounted, wired and tested.
   b. Shall contain Electromagnetic Interference (EMI) frequency protection.
   c. Insulated Gate Bi-Polar Transistors (IGBT) used to produce the output pulse width modulated (PWM) waveform, allowing for quiet motor operation.

d. Self diagnostics with fault and power code LED indicator. Field accessory Display Kit available for further diagnostics and special setup applications.
e. RS485 capability standard.
f. Electronic thermal overload protection.
g. 5% swinging chokes for harmonic reduction and improved power factor.
h. All printed circuit boards shall be conformal coated.

3. Integrated EconoMi$er IV, EconoMi$er2, and EconoMi$er X standard leak rate models. (Factory installed on 3 phase models only. Field installed on all 3 and 1 phase models)
   a. Integrated, gear driven opposing modulating blade design type capable of simultaneous economizer and compressor operation.
   b. Independent modules for vertical or horizontal return configuration shall be available. Vertical return modules shall be available as a factory installed option.
   c. Damper blades shall be galvanized steel with composite gears. Plastic or composite blades on intake or return shall not be acceptable.
   d. Shall include all hardware and controls to provide free cooling with outdoor air when temperature and/or humidity are below setpoints.
   e. Shall be equipped with gear driven dampers for both the outdoor ventilation air and the return air for positive air stream control.
   f. Standard leak rate shall be equipped with dampers not to exceed 2% leakage at 1 in. wg pressure differential.
   g. Economizer controller on EconoMi$er IV models shall be Honeywell W7212 that provides:
      (1.) Combined minimum and DCV maximum damper position potentiometers with compressor staging relay.
      (2.) Functions with solid state analog enthalpy or dry bulb changeover control sensing.
      (3.) Contain LED indicates for:
      when free cooling is available, when module is in DCV mode, when exhaust fan contact is closed.
   h. Economizer controller on EconoMi$er X models shall be the Honeywell W7220 that provides:
      (1.) 2-line LCD interface screen for setup, configuration and troubleshooting.
      (2.) On-board Fault Detection and Diagnostics (FDD) that senses and alerts when the economizer is not operating properly, per California Title 24.
      (3.) Sensor failure loss of communication identification
      (4.) Automatic sensor detection
      (5.) Capabilities for use with multiple-speed indoor fan systems
      (6.) Utilize digital sensors: Dry bulb and Enthalpy
   i. Economizer controller on EconoMi$er 2 models with PremierLink shall be 4-20mA design and controlled by the PremierLink controller. PremierLink does not comply with California Title 24 Fault Detection& Diagnostic (FDD) requirements.
   j. Economizer controller on EconoMi$er 2 models with RTU Open models shall be a 4-20mA design controlled directly by the RTU Open controller. RTU Open meets California Title 24 Fault Detection & Diagnostic (FDD) requirements.
   k. Shall be capable of introducing up to 100% outdoor air.
   l. Shall be equipped with a barometric relief damper capable of relieving up to 100% return air and contain seals that meet ASHRAE 90.1 requirements.
   m. Shall be designed to close damper(s) during loss-of-power situations with spring return built into motor.
   n. Dry bulb outdoor air temperature sensor shall be provided as standard. Enthalpy sensor is also available on factory installed only. Outdoor air sensor setpoint shall be adjustable and shall range from 40 to 100F /4 to 38C. Additional sensor options shall be available as accessories.
   o. The economizer controller shall also provide control of an accessory power exhaust unit function. Factory set at 100%, with a range of 0% to 100%.
   p. The economizer shall maintain minimum airflow into the building during occupied period and provide design ventilation rate for full occupancy.
   q. Dampers shall be completely closed when the unit is in the unoccupied mode.
   r. Economizer controller shall accept a 2-10 Vdc CO2 sensor input for IAQ/DCV control. In this mode, dampers shall modulate the outdoor air damper to provide ventilation based on the sensor input.
   s. Compressor lockout temperature on W7220 is adjustable from -45F to 80F, set at a factory default of 32F. Others shall open at 35F (2C) and closes at 50F (10C).

t. Actuator shall be direct coupled to economizer gear. No linkage arms or control rods shall be acceptable.
u. Economizer controller shall provide indications when in free cooling mode, in the DCV mode, or the exhaust fan contact is closed.

4. Integrated EconoMi$er2, and EconoMi$er X Ultra Low Leak rate models.(Factory installed on 3 phase models only. Field installed on all 3 and 1 phase models)
   a. Integrated, gear driven opposing modulating blade design type capable of simultaneous economizer and compressor operation.
   b. Independent modules for vertical or horizontal return configuration shall be available. Vertical return modules shall be available as a factory installed option.
   c. Damper blades shall be galvanized steel with composite gears. Plastic or composite blades on intake or return shall not be acceptable.
   d. Shall include all hardware and controls to provide free cooling with outdoor air when temperature and/or humidity are below setpoints.
   e. Shall be equipped with gear driven dampers for both the outdoor ventilation air and the return air for positive air stream control
   f. Ultra Low Leak design meets California Title 24 section 140.4 and ASHRAE90.1 requirements for 4 cfm per sq.ft. on the outside air dampers and 10 cfm per sq. ft. on the return dampers.
   g. Economizer controller on EconoMi$er X models shall be the Honeywell W7220 that provides:
      (1.) 2-line LCD interface screen for setup, configuration and troubleshooting
      (2.) On-board Fault Detection and Diagnostics (FDD) that senses and alerts when the economizer is not operating properly, per California Title 24.
      (3.) Sensor failure loss of communication identification
      (4.) Automatic sensor detection
      (5.) Capabilities for use with multiple-speed indoor fan systems
      (6.) Utilize digital sensors: Dry bulb and Enthalpy
   h. Economizer controller on EconoMi$er 2 models with RTU Open models shall be a 4-20mA design controlled directly by the RTU Open controller. RTU Open meets California Title 24 Fault Detection & Diagnostic (FDD) requirements.
   i. Shall be capable of introducing up to 100% outdoor air.
   j. Shall be equipped with a barometric relief damper capable of relieving up to 100% return air and contain seals that meet ASHRAE 90.1 requirements.
   k. Shall be designed to close damper(s) during loss-of-power situations with spring return built into motor.
   l. Dry bulb outdoor air temperature sensor shall be provided as standard. Enthalpy sensor is also available on factory installed only. Outdoor air sensor setpoint shall be adjustable and shall range from 40 to 100° F / 4 to 38° C. Additional sensor options shall be available as accessories.
   m. The economizer controller shall also provide control of an accessory power exhaust unit function. Factory set at 100%, with a range of 0% to 100%.
   n. The economizer shall maintain minimum airflow into the building during occupied period and provide design ventilation rate for full occupancy.
   o. Dampers shall be completely closed when the unit is in the unoccupied mode.
   p. Economizer controller shall accept a 2-10 Vdc CO_2 sensor input for IAQ/DCV control. In this mode, dampers shall modulate the outdoor air damper to provide ventilation based on the sensor input.
   q. Compressor lockout temperature on W7220 is adjustable from -45° F to 80° F, set at a factory default of 32° F. Others shall open at 35°F (2°C) and closes at 50°F (10°C).
   r. Actuator shall be direct coupled to economizer gear. No linkage arms or control rods shall be acceptable.
   s. Economizer controller shall provide indications when in free cooling mode, in the DCV mode, or the exhaust fan contact is closed.

5. Two-Position Damper (Factory installed on 3 Phase Models Only. Field installed on all 3 and 1 Phase Models)
   a. Damper shall be a Two-Position Damper. Damper travel shall be from the full closed position to the field adjustable %-open setpoint.
   b. Damper shall include adjustable damper travel from 25% to 100% (full open).
   c. Damper shall include single or dual blade, gear driven dampers and actuator motor.
   d. Actuator shall be direct coupled to damper gear. No linkage arms or control rods shall be acceptable.
   e. Damper will admit up to 100% outdoor air for applicable rooftop units.
   f. Damper shall close upon indoor (evaporator) fan shutoff and/or loss of power.

g. The damper actuator shall plug into the rooftop unit's wiring harness plug. No hard wiring shall be required.
h. Outside air hood shall include aluminum water entrainment filter.
i. Not available with Staged Air Volume (SAV) models.

6. Manual damper
   a. Manual damper package shall consist of damper, air inlet screen, and rain hood which can be preset to admit up to 25 or 50% outdoor air for year round ventilation.
   b. Not available with Staged Air Volume (SAV) models.
7. Humidi-MiZer Adaptive Dehumidification System (3 Phase Models Only):
   a. The Humidi-MiZer Adaptive Dehumidification System shall be factory installed in single stage 48TC04-07 and 2-stage 48TC08-16 models with RTPF (round tube plate tin) condenser coils, and shall provide greater dehumidification of the occupied space by two modes of dehumidification operations in addition to its normal design cooling mode:
      (1.) Subcooling mode further sub cools the hot liquid refrigerant leaving the condenser coil when both temperature and humidity in the space are not satisfied.
      (2.) Hot gas reheat mode shall mix a portion of the hot gas from the discharge of the compressor with the hot liquid refrigerant leaving the condenser coil to create a two-phase heat transfer in the system, resulting in a neutral leaving air temperature when only humidity in the space is not satisfied.
      (3.) Includes head pressure controller.
8. Head Pressure Control Package
   a. Controller shall control coil head pressure by condenser fan speed modulation or condenser fan cycling and wind baffles.
   b. Shall consist of solid-state control and condenser coil temperature sensor to maintain condensing temperature between 90°F (32°C) and 110°F (43°C) at outdoor ambient temperatures down to -20°F (-29°C).
9. Propane Conversion Kit
   a. Package shall contain all the necessary hardware and instructions to convert a standard natural gas unit for use with liquefied propane, up to 2000 ft (610m) elevation.
   b. Additional accessory kits may be required for applications above 2000 ft (610m) elevation.
10. Flue Shield (04-14 sizes only)
    a. Flue shield shall provide protection from the hot sides of the gas flue hood.
11. Condenser Coil Hail Guard Assembly (Factory installed on 3 Phase Models Only. Field installed on all 3 and 1 Phase Models)
    a. Shall protect against damage from hail.
    b. Shall be either hood style or louvered.
12. Unit-Mounted, Non-Fused Disconnect Switch (Available on units with MOCP's of 80 amps or less):
    a. Switch shall be factory installed, internally mounted.
    b. National Electric Code (NEC) and UL approved non-fused switch shall provide unit power shutoff.
    c. Shall be accessible from outside the unit.
    d. Shall provide local shutdown and lockout capability.
13. Convenience Outlet:
    a. Powered convenience outlet. (3 Phase Models Only)
       (1.) Outlet shall be powered from main line power to the rooftop unit.
       (2.) Outlet shall be powered from line side or load side of disconnect by installing contractor, as required by code. If outlet is powered from load side of disconnect, unit electrical ratings shall be UL certified and rated for additional outlet amperage.
       (3.) Outlet shall be factory installed and internally mounted with easily accessible 115-v female receptacle.
       (4.) Outlet shall include 15 amp GFI receptacles with independent fuse protection.
       (5.) Voltage required to operate convenience outlet shall be provided by a factory installed step-down transformer.
       (6.) Outlet shall be accessible from outside the unit.
       (7.) Outlet shall include a field installed "Wet in Use" cover.
    b. Non-Powered convenience outlet.
       (1.) Outlet shall be powered from a separate 115/120v power source.
       (2.) A transformer shall not be included.
       (3.) Outlet shall be factory installed and internally mounted with easily accessible 115-v female receptacle.

(4.) Outlet shall include 15 amp GFI receptacles with independent fuse protection.
(5.) Outlet shall be accessible from outside the unit.
(6.) Outlet shall include a field installed “Wet in Use” cover.

14. Flue Discharge Deflector (04-14 sizes only):
    a. Flue discharge deflector shall direct unit exhaust vertically instead of horizontally.
    b. Deflector shall be defined as a “natural draft” device by the National Fuel and Gas (NFG) code.
15. Thru-the-Base Connectors:
    a. Kits shall provide connectors to permit gas and electrical connections to be brought to the unit through the unit basepan.
    b. Minimum of four connection locations per unit.
16. Supply Duct Cover: (16 size only.)
    a. Required when field converting the factory standard vertical duct supply to horizontal duct supply configuration. One required per unit.
17. Propeller Power Exhaust:
    a. Power exhaust shall be used in conjunction with an integrated economizer.
    b. Independent modules for vertical or horizontal return configurations shall be available.
    c. Horizontal power exhaust is shall be mounted in return ductwork.
    d. Power exhaust shall be controlled by economizer controller operation. Exhaust fans shall be energized when dampers open past the 0-100% adjustable setpoint on the economizer control.
18. Roof Curbs (Vertical):
    a. Full perimeter roof curb with exhaust capability providing separate air streams for energy recovery from the exhaust air without supply air contamination.
    b. Formed galvanized steel with wood nailer strip and shall be capable of supporting entire unit weight.
    c. Permits installation and securing of ductwork to curb prior to mounting unit on the curb.
19. High Altitude Gas Conversion Kit:
    a. Package shall contain all the necessary hardware and instructions to convert a standard natural gas unit to operate from 2000-7000 ft (610 to 2134m) elevation with natural gas or from 0-7000 ft (90-2134m) elevation with liquefied propane.
20. Outdoor Air Enthalpy Sensor:
    a. The outdoor air enthalpy sensor shall be used to provide single enthalpy control. When used in conjunction with a return air enthalpy sensor, the unit will provide differential enthalpy control. The sensor allows the unit to determine if outside air is suitable for free cooling.
21. Return Air Enthalpy Sensor:
    a. The return air enthalpy sensor shall be used in conjunction with an outdoor air enthalpy sensor to provide differential enthalpy control.
22. Indoor Air Quality (CO_2) Sensor:
    a. Shall be able to provide demand ventilation indoor air quality (IAQ) control.
    b. The IAQ sensor shall be available in duct mount, wall mount, or wall mount with LED display. The setpoint shall have adjustment capability.
23. Smoke detectors (factory installed only):
    a. Shall be a Four-Wire Controller and Detector.
    b. Shall be environmental compensated with differential sensing for reliable, stable, and drift-free sensitivity.
    c. Shall use magnet-activated test/reset sensor switches.
    d. Shall have tool-less connection terminal access.
    e. Shall have a recessed momentary switch for testing and resetting the detector.
    f. Controller shall include:
        (1.) One set of normally open alarm initiation contacts for connection to an initiating device circuit on a fire alarm control panel.
        (2.) Two Form-C auxiliary alarm relays for interface with rooftop unit or other equipment.
        (3.) One Form-C supervision (trouble) relay to control the operation of the Trouble LED on a remote test/reset station.
        (4.) Capable of direct connection to two individual detector modules.
        (5.) Can be wired to up to 14 other duct smoke detectors for multiple fan shutdown applications

24. Winter start kit
    a. Shall contain a bypass device around the low pressure switch.
    b. Shall be required when mechanical cooling is required down to 25°F (-4°C).
    c. Shall not be required to operate on an economizer when below an outdoor ambient of 40°F (4°C).
25. Time Guard
    a. Shall prevent compressor short-cycling by providing a 5-minute delay (±2 minutes) before restarting a compressor after shutdown for any reason.
    b. One device shall be required per compressor.
26. Disconnect Switch Bracket (16 size only)
    a. Provides a pre-engineered and sized mounting bracket for applications requiring a unit mounted fused and non-fused disconnect of greater than 100 amps. Bracket assures that no damage will occur to coils when mounting with screws and other fasteners.
27. California OSHPD Seismic Certification Label
    a. Units meet the seismic capacity requirements of the International Code Council Evaluation Service (ICC-ES) document AC156 (Acceptance Criteria for Seismic Qualification by Shake-Table Testing of Nonstructural Components and Systems) and per International Building Code (IBC 2009) at an SDS (g) value of 2.00 z/h=1.0, Ip=1.5 and certified by independent structural engineers.
    b. Units shall include a certification label that meets the CA OSHPD Special Seismic Certification pre-approval labeling requirements on the external chassis of the unit.
28. Hinged Access Panels
    a. Shall provide easy access through integrated quarter turn latches.
    b. Shall be on major panels of: filter, control box, fan motor, and compressor.
29. Display Kit for Variable Frequency Drive
    a. Kit allows the ability to access the VFD controller programs to provide special setup capabilities and diagnostics.
    b. Kit contains display module and communication cable.
    c. Display Kit can be permanently installed in the unit or used on any SAV system VFD controller as needed.

Copyright 2015 Carrier Corp. • 7310 W. Morris St. • Indianapolis, IN 46231
Edition Date: 02/15

Catalog No: 48TC−04−16−02PD

Manufacturer reserves the right to change, at any time, specifications and designs without notice and without obligations.

Replaces: 48TC−04−16−01PD