50XL–A
Infinity™ 15 SEER Single–Packaged Air Conditioner With Puron® (R–410A) Refrigerant Single Phase 2 to 5 Nominal Tons (Sizes 24–60)

Carrier®
Turn to the Experts.℠

Installation Instructions

⚠ CAUTION

EQUIPMENT OPERATION HAZARD

Failure to follow this caution may result in improper unit operation.
OAT sensor must be field installed. See Accessory Installation for more details.

⚠ CAUTION

EQUIPMENT OPERATION HAZARD

Failure to follow this caution may result in improper unit operation.
This Infinity unit is designed for use with an Infinity User Interface.

NOTE: Read the entire instruction manual before starting the installation.

TABLE OF CONTENTS

PAGE
SAFETY CONSIDERATIONS 2
INTRODUCTION 2
RECEIVING AND INSTALLATION 2-10
Check Equipment 2
Identify Unit 2
Inspect Shipment 2
Provide Unit Support 2
Roof Curb 2
Slab Mount 3
Provide Clearances 3
Rig and Place Unit 3
Inspection 3
Rigging/Lifting of Unit 3
Select and Install Ductwork 7
Converting Horizontal Discharge Units to Downflow (Vertical) Discharge Units 8
Provide for Condensate Disposal 8
Install Electrical Connections 9
High-Voltage Connections 9
Routing Power Leads Into Unit 11
Connecting Ground Lead to Ground Screw 11
Routing Control Power Wires 11
Accessory Installation 11
Special Procedures for 208-v Operation 12
PRE-START-UP 13
START-UP 13-20
Unit Start-Up 13
Sequence of Operation 17
Check for Refrigerant Leaks 19
Start-Up Adjustments 19
Checking Cooling and Heating Control Operation 19
Checking and Adjusting Refrigerant Charge 19
Refrigerant Charge 19
No Charge 19
Low Charge Cooling 20
To Use Cooling Charging Charts 20
Indoor Airflow and Airflow Adjustments 20
Non-Communicating Emergency Cooling/Heating Mode . . 20
MAINTENANCE 20-23
Air Filter 22
Indoor Fan and Motor 22
Outdoor Coil, Indoor Coil, and Condensate Drain Pan 22
Outdoor Fan 23
Electrical Controls and Wiring 23
Refrigerant Circuit 23
Indoor Airflow 23
Metering Devices–TXV & AccuRater® Piston 23
Pressure Switches 23
Loss-of-Charge Switch 23
High-Pressure Switches 23
Copeland Scroll Compressor (Puron® Refrigerant) 23
Refrigerant System 24
Refrigerant 24
Compressor Oil 24
Servicing Systems on Roofs with Synthetic Materials 24
Liquid-Line Filter Drier 24
Puron (R-410A) Refrigerant Charging 24
TROUBLESHOOTING 24
FINAL CHECKS 26
CARE AND MAINTENANCE 26
START-UP CHECKLIST 26

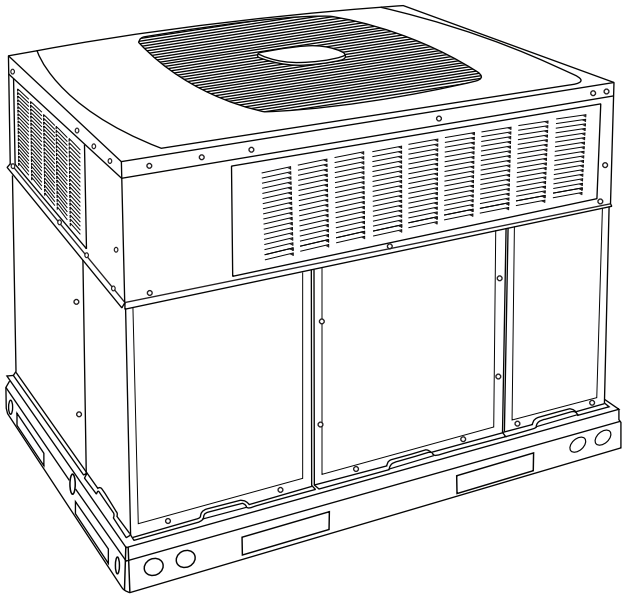

Fig. 1 - Unit 50XL-A

SAFETY CONSIDERATIONS

Improper installation adjustment, alteration, service, maintenance, or use can cause explosion, fire, electrical shock, or other conditions which may cause death, personal injury, or property damage. Consult a qualified installer, service agency, or your distributor or branch for information or assistance. The qualified installer or agency must use factory-authorized kits or accessories when modifying this product Refer to the individual instructions packaged with the kits or accessories when installing.

Follow all safety codes. Wear safety glasses, protective clothing, and work gloves. Use quenching cloth for brazing operations. Have a fire extinguisher available. Read these instructions thoroughly and follow all warnings or cautions included in literature and attached to the unit. Consult local building codes, the current editions of the National Electrical Code (NEC) NFPA 70.

In Canada refer to the current editions of the Canadian electrical Code CSA C22.1.

Recognize safety information. This is the safety-alert symbol ⚠. When you see this symbol on the unit and in instructions or manuals, be alert to the potential for personal injury. Understand these signal words; DANGER, WARNING, and CAUTION. These words are used with the safety-alert symbol. DANGER identifies the most serious hazards which **will** result in severe personal injury or death. WARNING signifies hazards which **could** result in personal injury or death. CAUTION is used to identify unsafe practices which **may** result in minor personal injury or product and property damage. NOTE is used to highlight suggestions which **will** result in enhanced installation, reliability, or operation.

⚠ WARNING

ELECTRICAL SHOCK HAZARD

Failure to follow this warning could result in personal injury or death.

Before installing or servicing system, always turn off main power to system and install lockout tag. There may be more than one disconnect switch. Turn off accessory heater power switch if applicable.

⚠ WARNING

UNIT OPERATION AND SAFETY HAZARD

Failure to follow this warning could result in personal injury or equipment damage.

Puron (R-410A) systems operate at higher pressures than standard R-22 systems. DO NOT use R-22 service equipment or components on Puron (R-410A) equipment. Ensure service equipment is rated for Puron (R-410A).

⚠ CAUTION

CUT HAZARD

Failure to follow this caution may result in personal injury.

When removing access panels or performing maintenance functions inside your unit, be aware of sharp sheet metal parts and screws. Although special care is taken to reduce sharp edges to a minimum, be extremely careful when handling parts or reaching into the unit.

INTRODUCTION

The 50XL-A packaged air conditioner is fully self-contained and designed for outdoor installation (See Fig. 1). Standard units are shipped in a horizontal-discharge configuration for installation on a rooftop, or a cement slab (See Fig. 4 for roof curb details). Standard units can be converted to downflow (vertical) discharge configurations for rooftop applications.

RECEIVING AND INSTALLATION

Step 1 — Check Equipment

IDENTIFY UNIT

The unit model number and serial number are printed on the unit informative plate. Check this information against shipping papers.

INSPECT SHIPMENT

Inspect for shipping damage before removing packaging material. If unit appears to be damaged or is torn loose from its anchorage, have it examined by transportation inspectors before removal. Forward claim papers directly to transportation company. Manufacturer is not responsible for any damage incurred in transit. Check all items against shipping list. Immediately notify the nearest distributor's office if any item is missing. To prevent loss or damage, leave all parts in original packages until installation.

If the unit is to be mounted on a curb in a downflow application, review Step 5 to determine which method is to be used to remove the downflow panels before rigging and lifting into place. The panel removal process may require the unit to be on the ground.

Step 2 — Provide Unit Support

IMPORTANT: The unit must be secured to the curb by installing screws through the bottom of the curb flange and into the unit base rails. When installing large base units onto the common curb, the screws must be installed before allowing the full weight of the unit to rest on the curb. A minimum of six screws are required for large base units. Failure to secure unit properly could result in an unstable unit. See Warning near Rigging/Lifting information and accessory curb instructions for more details.

For hurricane tie downs, contact distributor for details and PE (Professional Engineering) Certificate, if required.

ROOF CURB

Install accessory roof curb in accordance with instructions shipped with curb (See Fig. 4). Install insulation, cant strips, roofing, and flashing. Ductwork must be attached to curb.

IMPORTANT: The gasketing of the unit to the roof curb is critical for a water tight seal. Install gasketing material supplied with the roof curb. Improperly applied gasketing also can result in air leaks and poor unit performance.

Curb should be level to within 1/4 in. (6.4 mm) (See Fig. 2). This is necessary for unit drain to function properly. Refer to accessory roof curb installation instructions for additional information as required.

Installation on older "G" series roof curbs.

Two accessory kits are available to aid in installing a new "G" series unit on an old "G" roof curb.

1. Accessory kit number CPADCURB001A00, (small chassis) and accessory kit number CPADCURB002A00, (large chassis) includes roof curb adapter and gaskets for the perimeter seal and duct openings. No additional modifications to the curb are required when using this kit.
2. An alternative to the adapter curb is to modify the existing curb by removing the outer horizontal flange and use accessory kit number CPGSKTKIT001A00 which includes spacer blocks (for easy alignment to existing curb) and gaskets for the perimeter seal and duct openings. This kit is used when existing curb is modified by removing outer horizontal flange.

⚠ CAUTION

UNIT/STRUCTURAL DAMAGE HAZARD

Failure to follow this caution may result in property damage.

Ensure there is sufficient clearance for saw blade when cutting the outer horizontal flange of the roof curb so there is no damage to the roof or flashing.

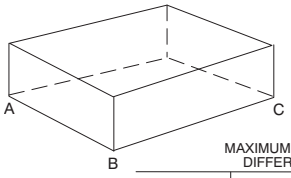

MAXIMUM ALLOWABLE DIFFERENCE in. (mm)		
A-B	B-C	A-C
1/4 (6.35)	1/4 (6.35)	1/4 (6.35)

A07925

Fig. 2 - Unit Leveling Tolerances

SLAB MOUNT

Place the unit on a solid, level concrete pad that is a minimum of 4 in. thick with 2 in. (51 mm) above grade. The slab should extend approximately 2 in. beyond the casing on all 4 sides of the unit (See Fig. 3). Do not secure the unit to the slab *except* when required by local codes.

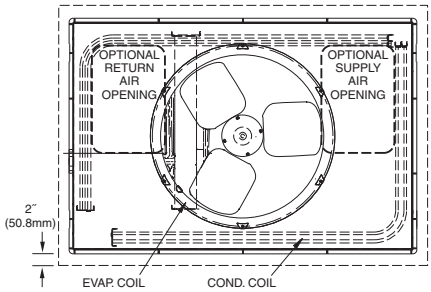

A07926

Fig. 3 - Slab Mounting Detail

Step 3 — Provide Clearances

The required minimum service clearances are shown in Fig. 5 and 6. Adequate ventilation and outdoor air must be provided. The outdoor fan draws air through the outdoor coil and discharges it through the top fan grille. Be sure that the fan discharge does not recirculate to the outdoor coil. Do not locate the unit in either a corner or under an overhead obstruction. The minimum clearance under a partial overhang (such as a normal house overhang) is 48 in. (1219 mm) above the unit top. The maximum horizontal extension of a partial overhang must not exceed 48 in. (1219 mm).

IMPORTANT: Do not restrict outdoor airflow. An air restriction at either the outdoor-air inlet or the fan discharge may be detrimental to compressor life.

Do not place the unit where water, ice, or snow from an overhang or roof will damage or flood the unit. Do not install the unit on carpeting or other combustible materials. Slab-mounted units should be at least 4 in. (102 mm) above the highest expected water and runoff levels. Do not use unit if it has been under water.

Step 4 — Rig and Place Unit

Rigging and handling of this equipment can be hazardous for many reasons due to the installation location (roofs, elevated structures, etc.).

Only trained, qualified crane operators and ground support staff should handle and install this equipment.

When working with this equipment, observe precautions in the literature, on tags, stickers, and labels attached to the equipment, and any other safety precautions that might apply.

Training for operators of the lifting equipment should include, but not be limited to, the following:

1. Application of the lifter to the load, and adjustment of the lifts to adapt to various sizes or kinds of loads.
2. Instruction in any special operation or precaution.
3. Condition of the load as it relates to operation of the lifting kit, such as balance, temperature, etc.

Follow all applicable safety codes. Wear safety shoes and work gloves.

INSPECTION

Prior to initial use, and at monthly intervals, all rigging shackles, clevis pins, and straps should be visually inspected for any damage, evidence of wear, structural deformation, or cracks. Particular attention should be paid to excessive wear at hoist hooking points and load support areas. Materials showing any kind of wear in these areas must not be used and should be discarded.

⚠ WARNING

UNIT FALLING HAZARD

Failure to follow this warning could result in personal injury or death.

Never stand beneath rigged units or lift over people.

1. Leave top shipping skid on the unit for use as a spreader bar to prevent the rigging straps from damaging the unit. If the skid is not available, use a spreader bar of sufficient length to protect the unit from damage.

⚠ WARNING

PROPERTY DAMAGE HAZARD

Failure to follow this warning could result in personal

When straps are taut, the clevis should be a minimum of 36 in. (914 mm) above the unit top cover.

Rigging/Lifting of Unit (See Fig. 7)

Lifting holes are provided in base rails as shown.

1. Attach shackles, clevis pins, and straps to the base rails of the unit. Be sure materials are rated to hold the weight of the unit (See Fig. 7).
2. Attach a clevis of sufficient strength in the middle of the straps. Adjust the clevis location to ensure unit is lifted level with the ground.

After the unit is placed on the roof curb or mounting pad, remove the top skid.

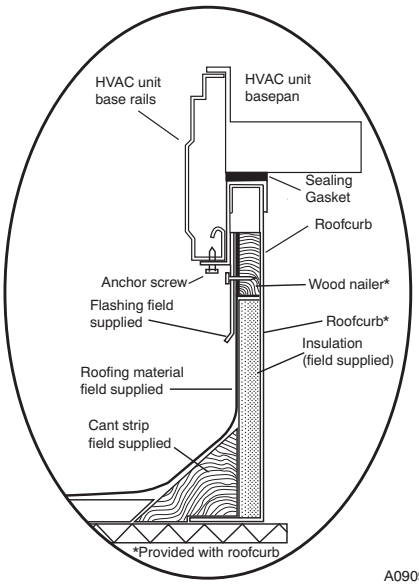

ROOF CURB DETAIL

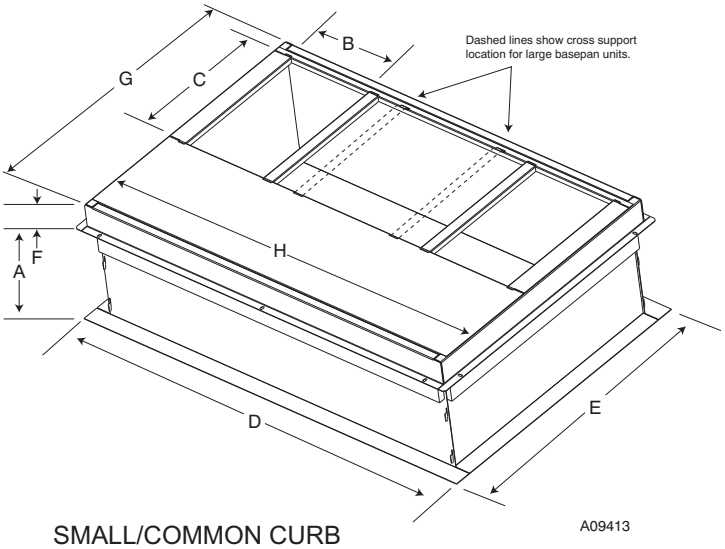

SMALL/COMMON CURB

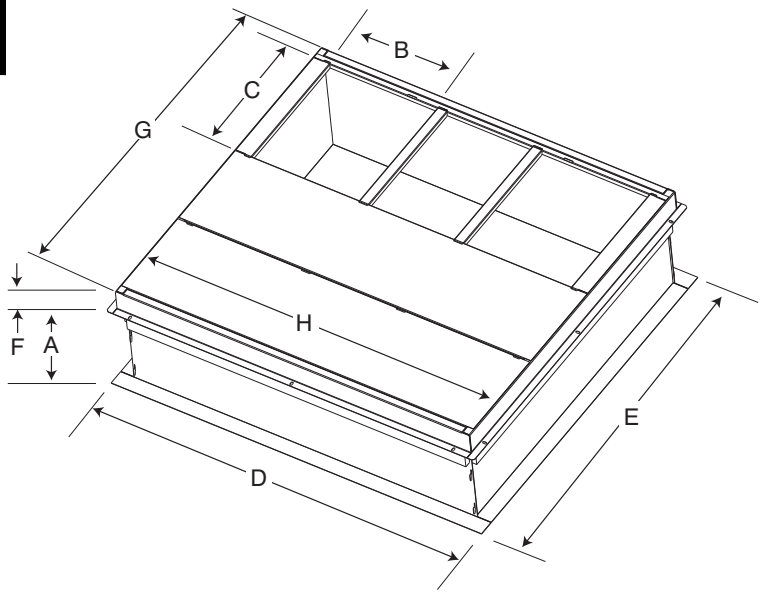

LARGE CURB

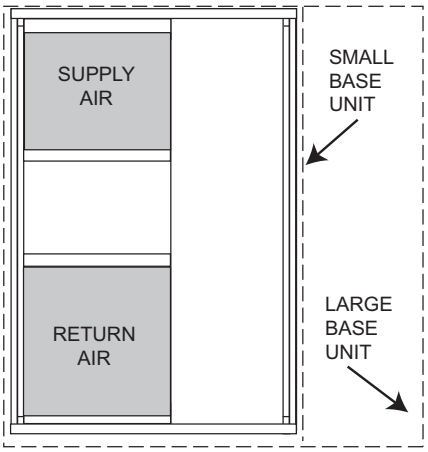

UNIT PLACEMENT ON COMMON CURB

SMALL OR LARGE BASE UNIT

A09414

UNIT SIZE	CATALOG NUMBER	A IN. (mm)	B (small/common base) IN. (mm)*	B (large base) IN. (mm)*	C IN. (mm)	D IN. (mm)	E IN. (mm)	F IN. (mm)	G IN. (mm)	H IN. (mm)
Small or Large	CPRFCURB010A00	11 (279)	10 (254)	14 (356)	16 (406)	47.8 (1214)	32.4 (822)	2.7 (69)	30.6 (778)	46.1 (1170)
	CPRFCURB011A00	14 (356)								
Large	CPRFCURB012A00	11 (279)	14 (356)				43.9 (1116)		42.2 (1072)	
	CPRFCURB013A00	14 (356)								

* Part Numbers CPRCURB010A00 and CPRCURB011A00 can be used on both small and large basepan units. The cross supports must be located based on whether the unit is a small basepan or a large basepan.

NOTES:

1. Roof curb must be set up for unit being installed.
2. Seal strip must be applied, as required, to unit being installed.
3. Roof curb is made of 16-gauge steel.
4. Attach ductwork to curb (flanges of duct rest on curb).
5. Insulated panels: 1-in. (25.4 mm) thick fiberglass 1 lb. density.

Fig. 4 - Roof Curb Dimensions

UNIT	ELECTRICAL CHARACTERISTICS	UNIT WT.		UNIT HEIGHT IN/MM		CENTER OF GRAVITY IN/MM					
		LB	KG	"A"		X		Y		Z	
50XL-A24---30	208/230-1-60	386	175.0	44-3/4	1136.7	20-1/2	520.7	15-3/4	400.1	16-5/8	422.3
50XL-A30---30	208/230-1-60	391	177.2	46-3/4	1187.5	20-1/2	520.7	15-3/4	400.1	16-5/8	441.3

UNITS	VOLTAGE	CORNER WEIGHT LB/KG							
		"1"		"2"		"3"		"4"	
50XL-A24---30	208/230	77.2	35.0	61.7	28.0	92.6	42.0	154.3	70.1
50XL-A30---30	208/230	78.2	35.5	62.5	28.4	93.8	42.6	156.3	71.0

REQUIRED CLEARANCES TO COMBUSTIBLE MATL.

	INCHES	[MM]
TOP OF UNIT	14	[355.6]
DUCT SIDE OF UNIT	2	[50.8]
SIDE OPPOSITE DUCTS	14	[355.6]
BOTTOM OF UNIT	0	[0.0]
ELECTRICAL PANEL	36	[914.4]

NEC. REQUIRED CLEARANCES.

	INCHES	[MM]
BETWEEN UNITS, POWER ENTRY SIDE	42	[1066.8]
UNIT AND UNGROUNDED SURFACES, POWER ENTRY SIDE	36	[914.0]
UNIT AND BLOCK OR CONCRETE WALLS AND OTHER GROUNDED SURFACES, POWER ENTRY SIDE	42	[1066.8]

REQUIRED CLEARANCE FOR OPERATION AND SERVICING

	INCHES	[MM]
EVAP. COIL ACCESS SIDE	36	[914.0]
POWER ENTRY SIDE	42	[1066.8]
(EXCEPT FOR NEC REQUIREMENTS)		
UNIT TOP	48	[1219.2]
SIDE OPPOSITE DUCTS	36	[914.0]
DUCT PANEL	12	[304.8]*

*MINIMUM DISTANCES: IF UNIT IS PLACED LESS THAN 12 [304.8] FROM WALL SYSTEM, THEN SYSTEM PERFORMANCE MAY BE COMPROMISED.

DIMENSIONS IN [] ARE IN MM

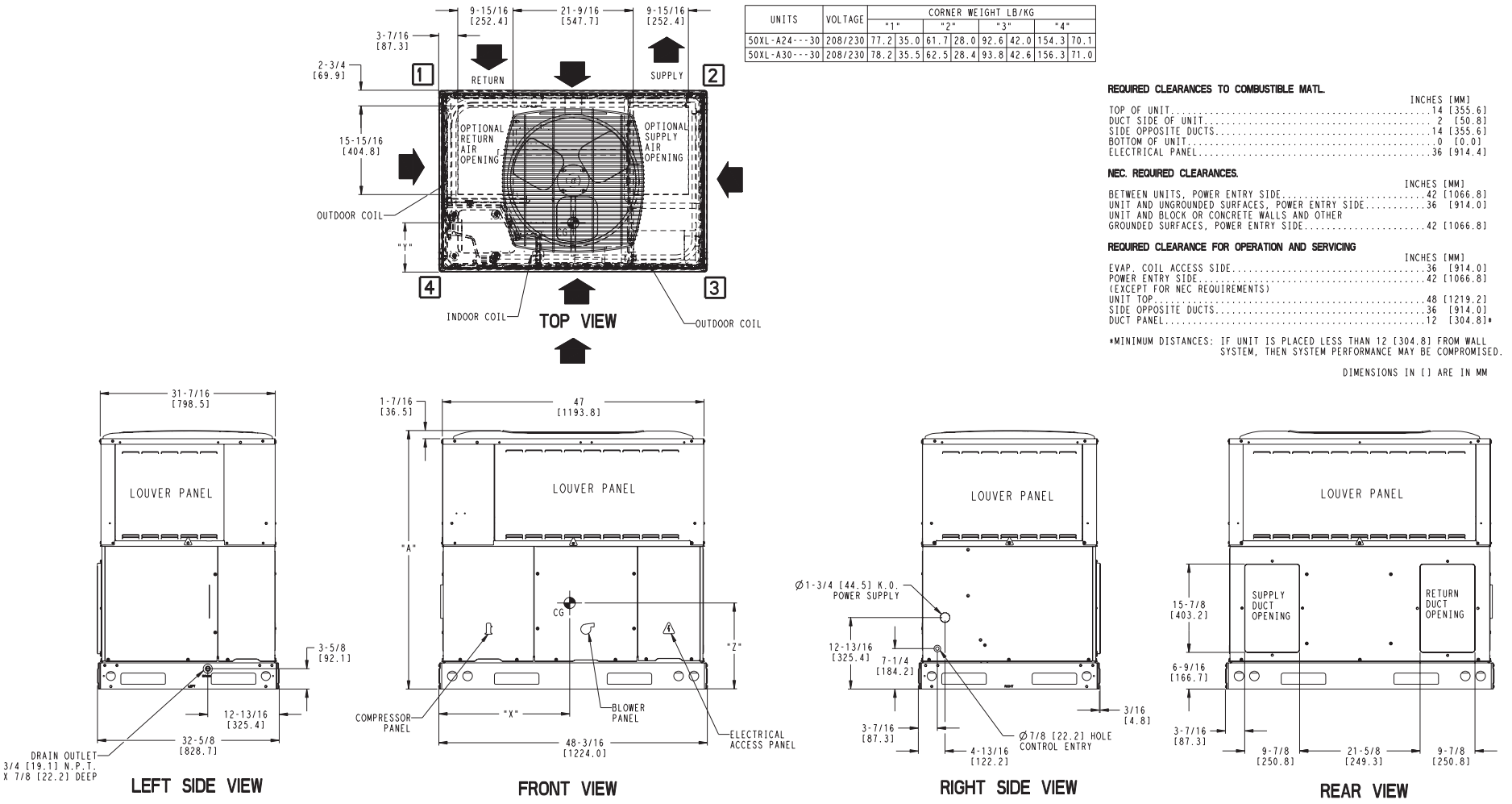

50XL500028	REV 3.0

Fig. 5 - 50XL-A24-30 Unit Dimensions

A09541

50XL – A

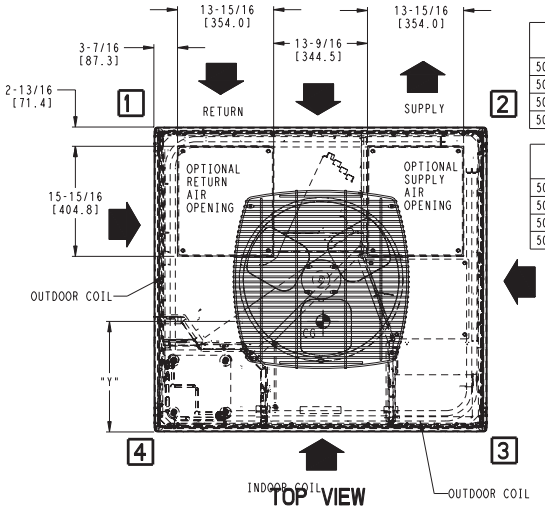

UNIT	ELECTRICAL CHARACTERISTICS	UNIT WT.		UNIT HEIGHT IN/MM		CENTER OF GRAVITY IN/MM					
		LB	KG	"A"		X		Y		Z	
50XL-A36---30	208/230-1-60	475	215.6	48-3/4	1238.3	20-1/4	514.4	17-1/2	444.5	16-5/8	422.3
50XL-A42---30	208/230-1-60	497	225.5	50-3/4	1289.1	20-1/4	514.4	17-1/2	444.5	16-5/8	422.3
50XL-A48---30	208/230-1-60	503	228.3	50-3/4	1289.1	20-1/4	514.4	17-1/2	444.5	17-5/8	447.7
50XL-A60---30	208/230-1-60	554	251.4	54-3/4	1390.7	20-1/4	514.4	17-1/2	444.5	18	457.2

UNITS	VOLTAGE	CORNER WEIGHT LB/KG							
		"1"		"2"		"3"		"4"	
50XL-A36---30	208/230	95.0	43.2	76.0	34.5	114.1	51.8	190.1	86.3
50XL-A42---30	208/230	99.4	45.1	79.6	36.1	119.3	54.2	198.9	90.3
50XL-A48---30	208/230	100.6	45.7	80.5	36.6	120.8	54.8	201.3	91.4
50XL-A60---30	208/230	110.8	50.3	88.7	40.3	133.0	60.4	221.7	100.6

REQUIRED CLEARANCES TO COMBUSTIBLE MATL.

	INCHES	[MM]
TOP OF UNIT	14	[355.6]
DUCT SIDE OF UNIT	2	[50.8]
SIDE OPPOSITE DUCTS	14	[355.6]
BOTTOM OF UNIT	0	[0.0]
ELECTRICAL PANEL	36	[914.4]

NEC. REQUIRED CLEARANCES.

	INCHES	[MM]
BETWEEN UNITS, POWER ENTRY SIDE	42	[1066.8]
UNIT AND UNGROUNDED SURFACES, POWER ENTRY SIDE	36	[914.0]
UNIT AND BLOCK OR CONCRETE WALLS AND OTHER GROUNDED SURFACES, POWER ENTRY SIDE	42	[1066.8]

REQUIRED CLEARANCE FOR OPERATION AND SERVICING

	INCHES	[MM]
EVAP. COIL ACCESS SIDE	36	[914.0]
POWER ENTRY SIDE	42	[1066.8]
(EXCEPT FOR NEC REQUIREMENTS)		
UNIT TOP	48	[1219.2]
SIDE OPPOSITE DUCTS	36	[914.0]
DUCT PANEL	12	[304.8]*

*MINIMUM DISTANCES: IF UNIT IS PLACED LESS THAN 12 [304.8] FROM WALL SYSTEM,THEN SYSTEM PERFORMANCE MAY BE COMPROMISED.

DIMENSIONS IN [] ARE IN MM

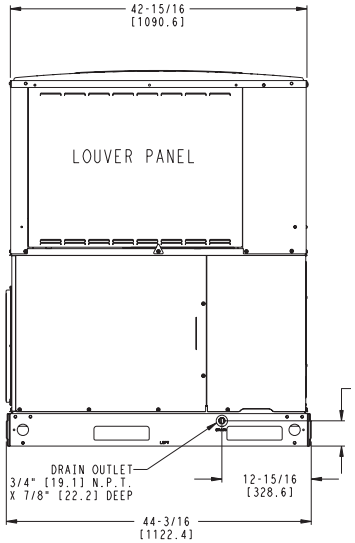

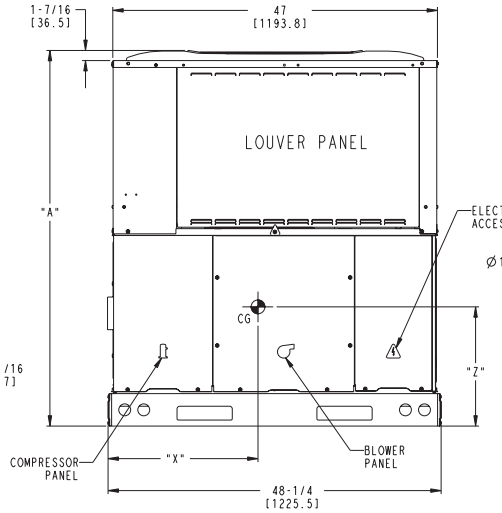

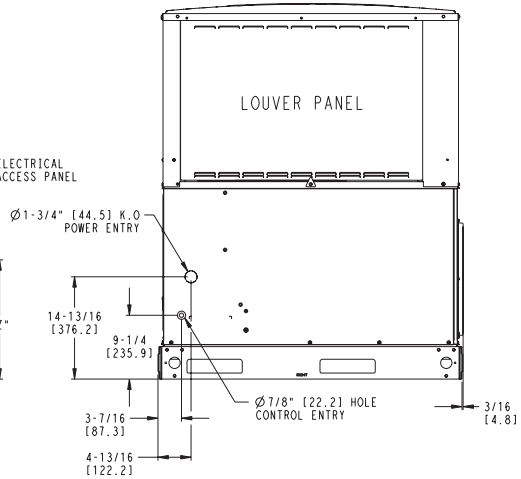

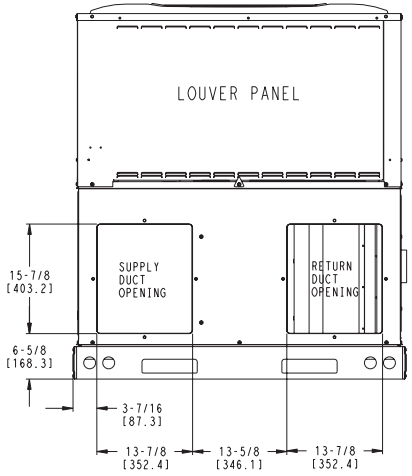

50XL500029	REV 3.0

Fig. 6 - 50XL-A36-60 Unit Dimensions

A09542

⚠ CAUTION - NOTICE TO RIGGERS
⚠ PRUDENCE - AVIS AUX MANIPULATEUR

ACCESS PANELS MUST BE IN PLACE WHEN RIGGING.
PANNEAUX D'ACCES DOIT ÊTRE EN PLACE POUR MANIPULATION.

Use top skid as spreader bar. / Utiliser la palette du haut comme barre de répartition

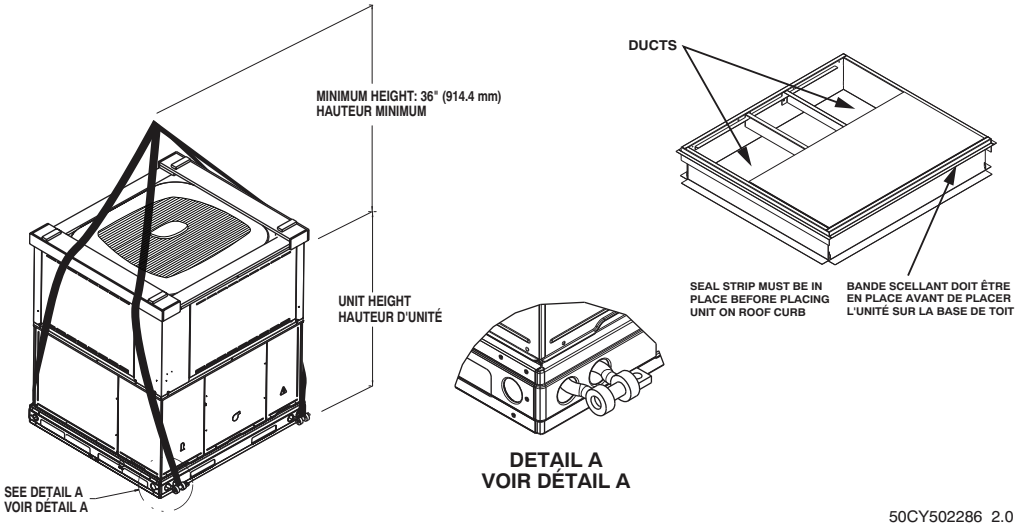

A09079

SMALL CABINET									LARGE CABINET					
Unit*	24		30			Unit*	36		42		48		60	
	lb	kg	lb	kg			lb	kg	lb	kg	lb	kg	lb	kg
Rigging Weight	393	178	398	181		Rigging Weight	484	220	506	230	512	232	563	255

NOTE: See dimensional drawing for corner weights.

Fig. 7 - Suggested Rigging

Step 5 — Select and Install Ductwork

The design and installation of the duct system must be in accordance with the standards of the NFPA for installation of non-residence type air conditioning and ventilating systems, NFPA 90A or residence type, NFPA 90B and/or local codes and ordinances.

Select and size ductwork, supply-air registers, and return air grilles according to ASHRAE (American Society of Heating, Refrigeration, and Air Conditioning Engineers) recommendations.

The unit has duct flanges on the supply- and return-air openings on the side of the unit.

⚠ WARNING

ELECTRICAL OPERATION HAZARD

Failure to follow this warning could result in personal injury or death.

For vertical supply and return units, tools or parts could drop into ductwork, therefore, install a 90 degree turn in the return ductwork between the unit and the conditioned space. If a 90 degree elbow cannot be installed, then a grille of sufficient strength and density should be installed to prevent objects from falling into the conditioned space. Units with electric heaters require 90 degree elbow in supply duct.

After the unit is placed on the roof curb or mounting pad, remove the top crating.

When designing and installing ductwork, consider the following:

1. All units should have field-supplied filters or accessory filter rack installed in the return-air side of the unit. Recommended sizes for filters are shown in Table 1.
2. Avoid abrupt duct size increases and reductions. Abrupt change in duct size adversely affects air performance.

IMPORTANT: Use flexible connectors between ductwork and unit to prevent transmission of vibration. Use suitable gaskets to ensure weather tight and airtight seal. When electric heat is installed, use fireproof canvas (or similar heat resistant material) connector between ductwork and unit discharge connection. If flexible duct is used, insert a sheet metal sleeve inside duct. Heat resistant duct connector (or sheet metal sleeve) must extend 24-in. (610 mm) from electric heater element.

3. Size ductwork for max possible air flow (See Table 1).
4. Seal, insulate, and weatherproof all external ductwork. Seal, insulate and cover with a vapor barrier all ductwork passing through conditioned spaces. Follow latest Sheet Metal and Air Conditioning Contractors National Association (SMACNA) and Air Conditioning Contractors Association (ACCA) minimum installation standards for residential heating and air conditioning systems.
5. Secure all ducts to building structure. Flash, weatherproof, and vibration-isolate duct openings in wall or roof according to good construction practices.
6. Read unit rating plate for any required clearances around ductwork.

CONVERTING HORIZONTAL DISCHARGE UNITS TO DOWNFLOW (VERTICAL) DISCHARGE UNITS

⚠ WARNING

ELECTRICAL SHOCK HAZARD

Failure to follow this warning could result in personal injury or death.

Before installing or servicing system, always turn off and tag main power to system. There may be more than one disconnect switch. Turn off accessory heater power switch if applicable.

1. Open all electrical disconnects and install lockout tag before starting any service work.
2. Remove horizontal (metal) ductcovers to access vertical (downflow) discharge duct knockouts in unit basepan. (See Fig. 8.)
3. Using Fig. 9 as a guide, proceed to cut out the downflow duct panels.
4. Drill 1/2 in. (13 mm) diameter or larger holes in all four corners of duct panels.

NOTE: On large chassis units remove sheet metal shields on panels by using a screw driver to shear off retainers and discard.

5. With keyhole or single bladed hacksaw cut out panels along "V" groove.
6. Reinstall both horizontal duct covers. Ensure opening is air-and watertight.
7. After completing unit conversion, perform all safety checks and power up unit.

Alternate Method

1. Open all electrical disconnects and install lockout tag before starting any service work.
2. Remove horizontal (metal) ductcovers to access vertical (downflow) discharge duct knockouts in unit basepan. (See Fig. 8.)
3. Leave top shipping crate on unit during this method.
4. Tip unit over on the front side (access panels) so the bottom of the base pan is accessible.
5. Drill two holes diagonally opposed, of suitable size to accommodate jigsaw or reciprocating saw. (See Fig. 9.)

NOTE: On large chassis units remove sheet metal shields on panels by using a screw driver to shear off retainers and discard.

⚠ CAUTION

UNIT COMPONENT DAMAGE HAZARD

Failure to follow this caution may result in damage to the unit being installed.

When cutting duct panels, do not contact or damage any internal components (heat exchanger, electric heat). Do not use a saw blade that protrudes more than 1 in. (25 mm) into unit.

6. Using a suitable saw cut along "V" groove and remove duct panels.
7. Tip unit back onto its base and replace duct covers.
8. After completing unit conversion, perform all safety checks and power up unit.

⚠ CAUTION

PROPERTY DAMAGE HAZARD

Failure to follow this caution may result in property damage.

Collect ALL screws that were removed. DO NOT leave screws on rooftop as permanent damage to the roof may occur.

NOTE: The design and installation of the duct system must be in accordance with the standards of the NFPA for installation of non residence-type air conditioning and ventilating systems, NFPA 90A or residence-type, NFPA 90B; and/or local codes and ordinances.

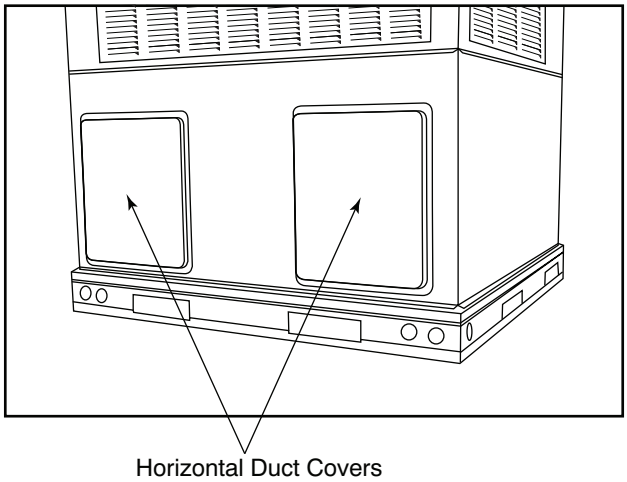

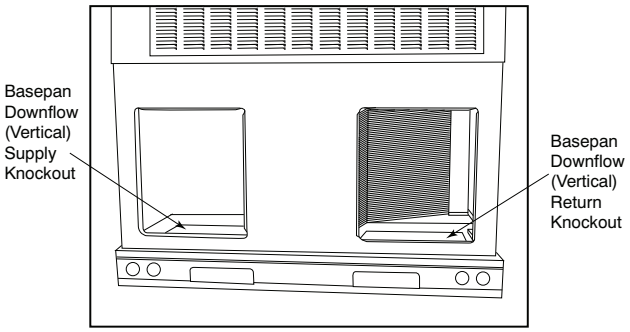

Fig. 8 - Supply and Return Duct Openings

Step 6 — Provide for Condensate Disposal

NOTE: Ensure that condensate-water disposal methods comply with local codes, restrictions, and practices.

The units dispose of condensate through a 3/4 -in. NPT female fitting that exits on the compressor end of the unit. Condensate water can be drained directly onto the roof in rooftop installations (where permitted) or onto a gravel apron in ground level installations. Install a field-supplied condensate trap at end of condensate connection to ensure proper drainage. Make sure that the outlet of the trap is at least 1 in. (25 mm) lower than the drain-pan condensate connection to prevent the pan from overflowing. Prime the trap with water. When using a gravel apron, make sure it slopes away from the unit.

If the installation requires draining the condensate water away from the unit, install a field-supplied 2-in. (51 mm) trap at the condensate connection to ensure proper drainage. Condensate trap is available as an accessory or is field-supplied. Make sure that the outlet of the trap is at least 1 in. (25 mm) lower than the unit drain-pan condensate connection to prevent the pan from

overflowing. Connect a drain tube using a minimum of field-supplied 3/4 -in. PVC or field-supplied 3/4 -in. copper pipe at outlet end of the 2 -in. trap (See Fig. 10). Do not undersize the tube. Pitch the drain tube downward at a slope of at least 1 in. (25 mm) for every 10 (3.1 m) ft. of horizontal run. Be sure to check the drain trough for leaks. Prime the trap at the beginning of the cooling season start-up.

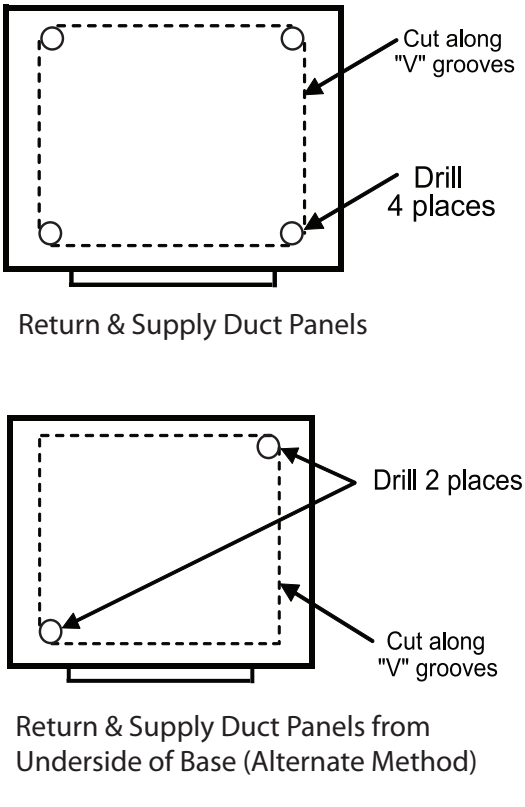

Fig. 9 - Vertical (Downflow) Discharge Knockouts

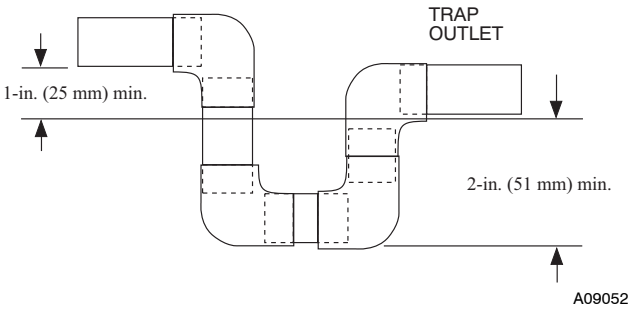

Fig. 10 - Condensate Trap

Step 7 — Install Electrical Connections

WARNING

ELECTRICAL SHOCK HAZARD

Failure to follow this warning could result in personal injury or death.

The unit cabinet must have an uninterrupted, unbroken electrical ground. This ground may consist of an electrical wire connected to the unit ground screw in the control compartment, or conduit approved for electrical ground when installed in accordance with NEC, NFPA 70 American National Standards Institute/National Fire Protection Association (latest edition) (in Canada, Canadian Electrical Code CSA C22.1) and local electrical codes.

HIGH-VOLTAGE CONNECTIONS

The unit must have a separate electrical service with a field-supplied, waterproof disconnect switch mounted at, or within sight from the unit. Refer to the unit rating plate, NEC and local codes for maximum fuse/circuit breaker size and minimum circuit amps (ampacity) for wire sizing.

The field-supplied disconnect may be mounted on the unit over the high-voltage inlet hole (See Fig. 5 and 6).

If the unit has an electric heater, a second disconnect may be required. Consult the Installation, Start-Up, and Service Instructions provided with the accessory for electrical service connections.

Operation of unit on improper line voltage constitutes abuse and may cause unit damage that could affect warranty.

Table 1 – Physical Data - Unit 50XL-A

UNIT SIZE	24	30	36	42	48	60
NOMINAL CAPACITY ton	2	2-1/2	3	3-1/2	4	5
SHIPPING WEIGHT lb	393	398	484	506	512	563
(kg)	178	181	220	230	232	255
COMPRESSOR	Two-Stage Scroll					
REFRIGERANT: PURON (R-410A) Quantity lb	10.1	11.3	9.5	13.8	15.3	15.8
(kg)	(4.6)	(5.1)	(4.3)	(6.3)	(6.9)	(7.2)
REFRIGERANT METERING DEVICE	TXV					
Size	2 Ton	3 Ton	3 Ton	4 Ton	4 Ton	5 Ton
OUTDOOR COIL						
Rows…Fins/in.	2…21	2…21	2…21	2…21	2…21	2…21
Face Area (sq. ft.)	13.6	15.3	17.5	19.4	19.4	23.3
OUTDOOR FAN						
Nominal Cfm	2700	2700	2800	2800	3300	3300
Diameter	22	22	22	22	22	22
Motor HP (RPM)	1/8 (825)	1/8 (825)	1/8 (825)	1/8 (825)	1/4 (1100)	1/3 (1110)
INDOOR COIL						
Rows…Fins/in.	3…17	3…17	3…17	3…17	3…17	4…17
Face Area (sq. ft.)	3.7	3.7	4.7	4.7	5.7	5.7
INDOOR FAN						
Nominal Airflow (Cfm)						
Comfort	Variable based on Comfort Settings (see User Interface instructions for more information).					
Efficiency	700	875	1050	1225	1400	1750
Max	800	1000	1200	1400	1600	2000
Size in.	10x10	10x10	11x10	11x10	11x10	11x10
(mm)	(254x254)	(254x254)	(279x254)	(279x254)	(279x254)	(279x254)
Motor HP (RPM)	1/2	1/2	3/4	3/4	3/4	1
HIGH-PRESSURE SWITCH (psig)						
Cutout	670 ± 10					
Reset (Auto)	470 ± 25					
HIGH-PRESSURE SWITCH 2 (psig)						
(Compressor Solenoid)						
Cutout	565 ± 15					
Reset (Auto)	455 ± 15					
LOSS-OF-CHARGE/LOW-PRESSURE SWITCH						
(Liquid Line) (psig)						
Cutout	23 ± 5					
Reset (Auto)	55 ± 5					
RETURN-AIR FILTERS Throwaway **in.***	20x24x1		24x30x1	24x36x1		
(mm)	(508x610x25)		(610x762x25)	(610x914x25)		

*Recommended filter sizes for field–installed air filter grilles mounted on the wall or ceiling of the conditioned structure. Required filter sizes shown are based on the larger of the ARI (Air Conditioning and Refrigeration Institute) rated cooling airflow or the heating airflow velocity of 300 ft (91.4 m) /minute for throwaway type or 450 ft (137 m) /minute for high–capacity type. Air filter pressure drop for non–standard filters must not exceed 0.08 IN. W.C..

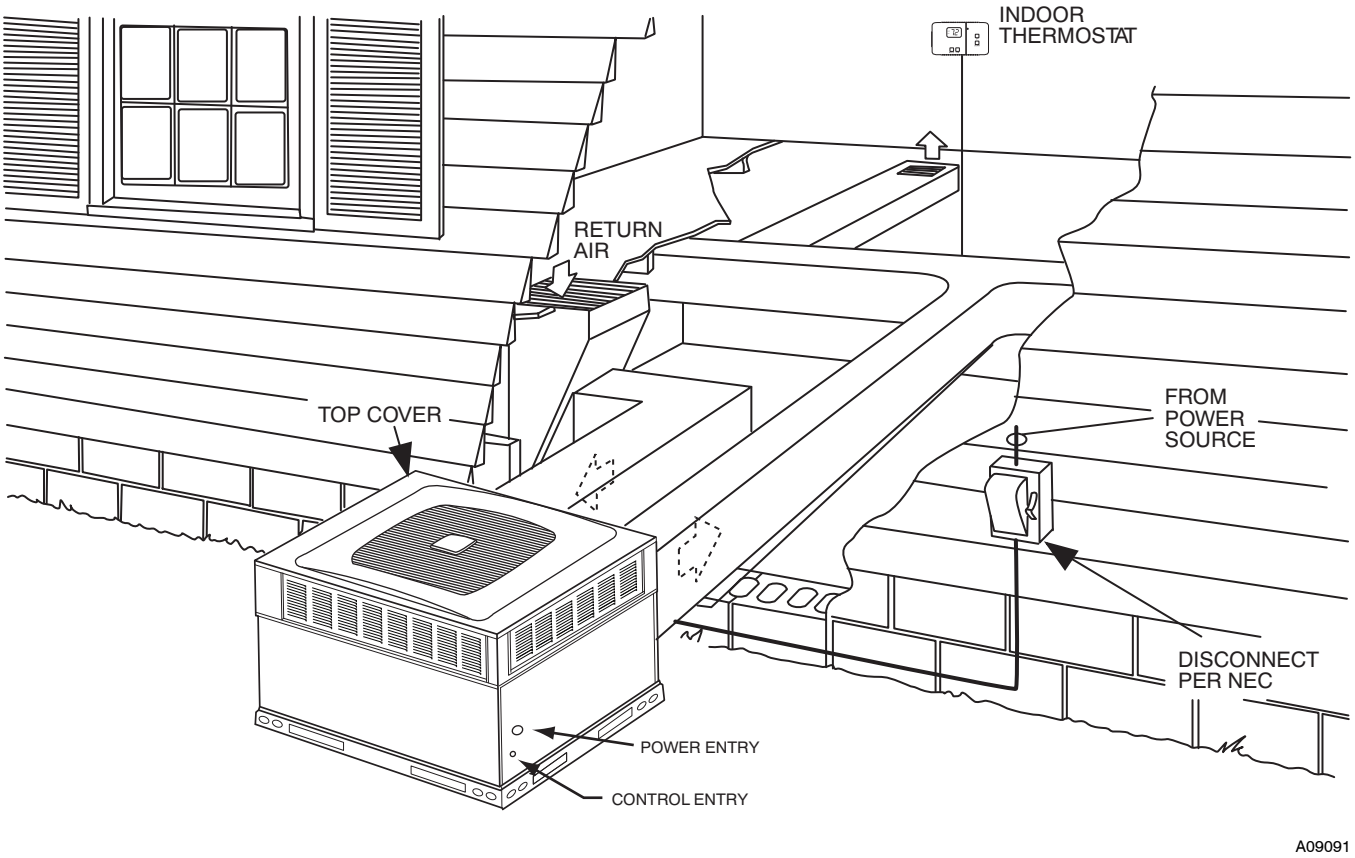

Fig. 11 - Typical Installation

⚠ CAUTION

UNIT COMPONENT DAMAGE HAZARD

Failure to follow this caution may result in damage to the unit being installed.

1. Make all electrical connections in accordance with NEC ANSI/NFPA (latest edition) and local electrical codes governing such wiring. In Canada, all electrical connections must be in accordance with CSA standard C22.1 Canadian Electrical Code Part 1 and applicable local codes. Refer to unit wiring diagram.
2. Use only copper conductor for connections between field-supplied electrical disconnect switch and unit. DO NOT USE ALUMINUM WIRE.
3. Be sure that high-voltage power to unit is within operating voltage range indicated on unit rating plate.
4. Insulate low-voltage wires for highest voltage contained within conduit when low-voltage control wires are in same conduit as high-voltage wires.
5. Do not damage internal components when drilling through any panel to mount electrical hardware, conduit, etc.

ROUTING POWER LEADS INTO UNIT

Use only copper wire between disconnect and unit. The high voltage leads should be in a conduit until they enter the duct panel; conduit termination at the duct panel must be watertight. Run the high-voltage leads through the power entry knockout on the power entry side panel. See Fig. 5 and 6 for location and size. For single-phase units, connect leads to the black and yellow wires.

CONNECTING GROUND LEAD TO GROUND SCREW

Connect the ground lead to the chassis using the ground screw in the wiring splice box (See Fig. 12).

ROUTING CONTROL POWER WIRES

For detailed instruction on the low voltage connections to the User Interface (UI), refer to the UI installation guide.

Form a drip-loop with the control leads before routing them into the unit. Route the low voltage control leads through grommeted, low-voltage hole provided into unit (See Fig. 5 and 6). Connect user interface leads to unit control power leads as shown in Fig. 14.

The unit transformer supplies 24-v power for complete system including accessory electrical heater. Transformer is factory wired for 230-v operation. If supply voltage is 208-v, rewire transformer primary as described in Special Procedures for 208-v Operation section.

The low-voltage circuit is fused by a board-mounted automotive fuse placed in series with transformer SEC1 and R circuit (See F1 on Fig. 15). The C circuit of transformer circuit is referenced to chassis ground through a printed circuit run at SEC2 and metal control board mounting eyelets. Check to be sure control board is mounted securely using both factory-installed screws.

ACCESSORY INSTALLATION

A. Accessory Electric Heaters

Electric heaters may be installed in 50XL-A per instructions supplied with electric heater package. See unit rating plate for factory-approved electric heater kits.

NOTE: Units installed without electric heat should have a factory-supplied sheet metal block-off plate installed over heater opening. This reduces air leakage and formation of exterior condensation.

B. Outdoor Air Temperature Sensor (OAT)

⚠ CAUTION

EQUIPMENT OPERATION HAZARD

The installation of an outdoor air temperature sensor (OAT) using the Infinity control board OAT terminals is required. Many Infinity features (electric heat lockout, auto humidity control, comfort rollback) will be lost if the OAT is not connected.

For detailed mounting instructions for the OAT sensor, please refer installation instructions shipped with the OAT.

The OAT input is used to supply outdoor temperature data for system level functions and for temperature display on User Interface (UI). Using two wires of the field-supplied thermostat wire cable, wire the ends of the two black OAT pigtails. Wire the opposite ends of these two wires to the OAT provided with the UI. There is no polarity to be observed.

NOTE: Mis-wiring OAT inputs will not cause damage to either Infinity control or thermistor. If the thermistor is wired incorrectly, no reading will appear at UI. Re-wire thermistor correctly for normal operation.

C. Humidifier Connections

The fan coil control board terminal marked HUM is provided for low voltage (24-vac) control of a humidifier. No humidistat is required as UI monitors indoor humidity.

When commanded to operate humidifier, the unit control will energize the HUM output to turn humidifier on and de-energize HUM output to turn humidifier off. Wire HUM and C terminals directly to humidifier as shown in Fig. 14.

SPECIAL PROCEDURES FOR 208-V OPERATION

Be sure unit disconnect switch is open.

Disconnect the yellow primary lead from the transformer. See unit wiring label (See Fig. 17).

Connect the yellow primary lead to the transformer terminal labeled 200-v.

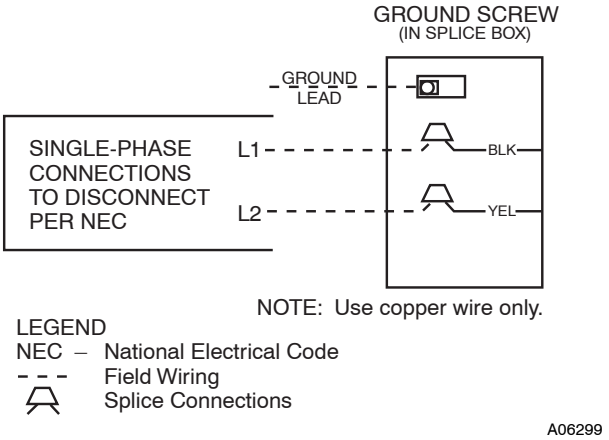

Fig. 12 - Line Power Connections

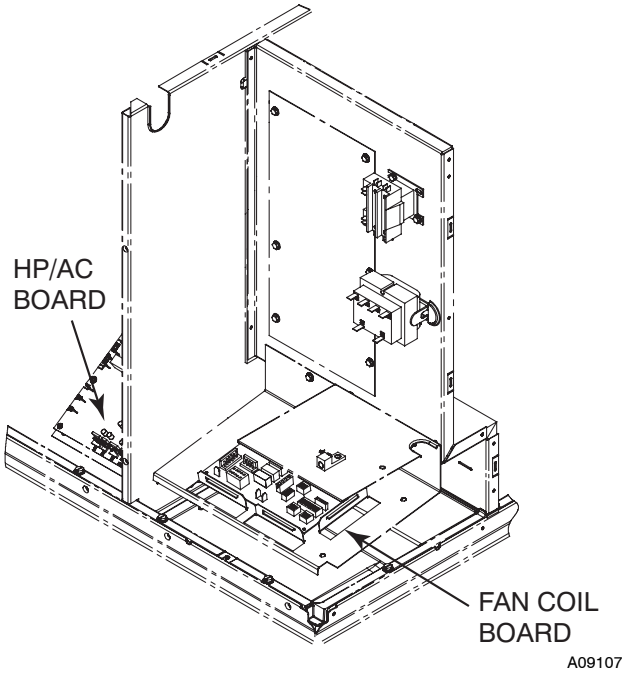

Fig. 13 - Control Plate

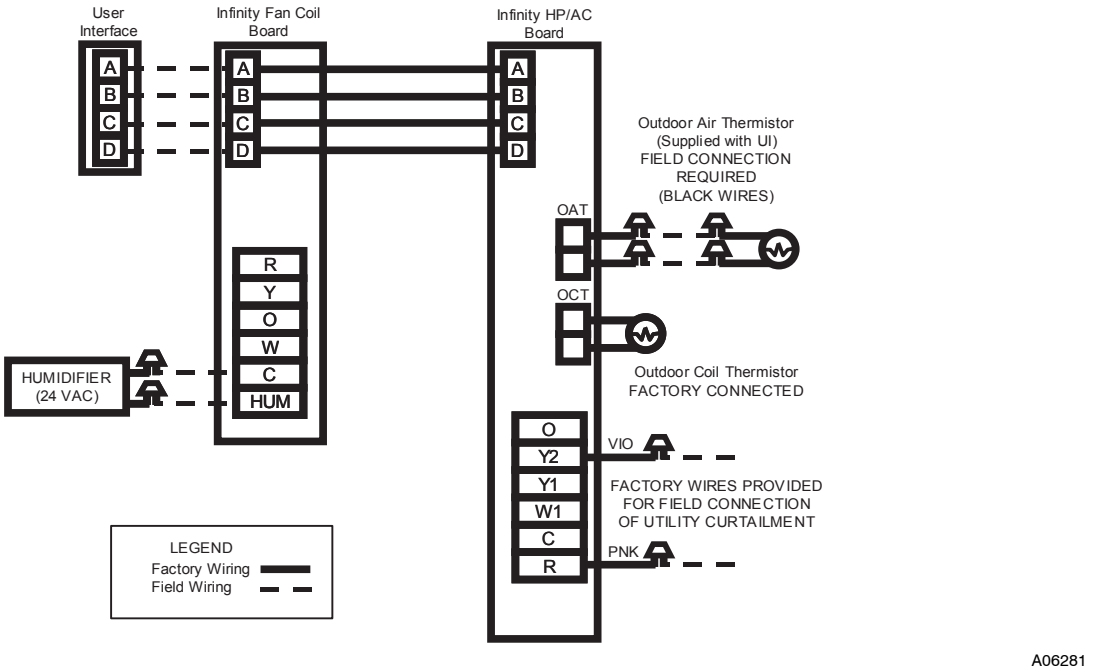

Fig. 14 - Control Voltage Wiring Connections

PRE-START-UP

⚠ WARNING

FIRE, EXPLOSION, ELECTRICAL SHOCK, ENVIRONMENTAL HAZARD

Failure to follow this warning could result in personal injury or death and/or property damage.

1. Follow recognized safety practices and wear protective goggles when checking or servicing refrigerant system.
2. Do not operate compressor or provide any electric power to unit unless compressor terminal cover is in place and secured.
3. Do not remove compressor terminal cover until all electrical sources are disconnected and tagged.
4. Relieve and recover all refrigerant from system before touching or disturbing anything inside terminal box if refrigerant leak is suspected around compressor terminals.
5. Never attempt to repair soldered connection while refrigerant system is under pressure.
6. Do not use torch to remove any component. System contains oil and refrigerant under pressure.
7. To remove a component, wear protective goggles and proceed as follows:
   a. Shut off electrical power to unit and install lockout tag.
   b. Relieve and reclaim all refrigerant from system using both high- and low-pressure ports.
   c. Cut component connecting tubing with tubing cutter and remove component from unit.
   d. Carefully unsweat remaining tubing stubs when necessary. Oil can ignite when exposed to flame.

Use the Start-Up Checklist supplied at the end of this book and proceed as follows to inspect and prepare the unit for initial start-up:

1. Remove all access panels.
2. Read and follow instructions on all DANGER, WARNING, CAUTION, and INFORMATION labels attached to, or shipped with unit.
3. Make the following inspections:
   a. Inspect for shipping and handling damages, such as broken lines, loose parts, disconnected wires, etc.
   b. Inspect for oil at all refrigerant tubing connections and on unit base. Detecting oil generally indicates a refrigerant leak. Leak test all refrigerant tubing connections using electronic leak detector, or liquid-soap solution. If a refrigerant leak is detected, see following Check for Refrigerant Leaks section.
   c. Inspect all field- and factory-wiring connections. Be sure that connections are completed and tight.
   d. Ensure wires do not touch refrigerant tubing or sharp sheet metal edges.
   e. Inspect coil fins. If damaged during shipping and handling, carefully straighten fins with a fin comb.
4. Verify the following conditions:
   a. Make sure that outdoor fan blade is correctly positioned in fan orifice (See Fig. 20).
   b. Make sure that condensate drain pan and trap are filled with water to ensure proper drainage.
   c. Make sure that all tools and miscellaneous loose parts have been removed.
5. Compressors are internally spring mounted. Do not loosen or remove compressor holddown bolts.
6. Each unit system has two Schrader-type ports, one low-side Schrader fitting located on the suction line, and one high-side Schrader fitting located on the compressor discharge line. Be sure that caps on the ports are tight.

START-UP

Step 1 — Unit Start-Up

NOTE: Always check high- and low-voltage supply to the unit components. Check the integrity of the plug receptacle connections and unit wiring harness prior to assuming a component failure.

A. LED Description

LEDs built into Infinity control boards provide installer or service person information concerning operation and/or fault condition of the unit controls and the indoor fan ECM motor. This information is also available at the system UI in text with basic troubleshooting instructions. Careful use of information displayed will reduce the need for extensive manual troubleshooting.

Both the Fan Coil and Heat Pump (HP)/Air Conditioner (AC) boards have an amber LED and a green LED located near the System Communications connector (ABCD) (upper right center of the Fan Coil board, lower right corner of the HP/AC board as installed in the unit). The amber LED is the System Status LED, labeled STATUS. The green LED, labeled COMM, is used as an indicator of system communications status (See Fig 14-15).

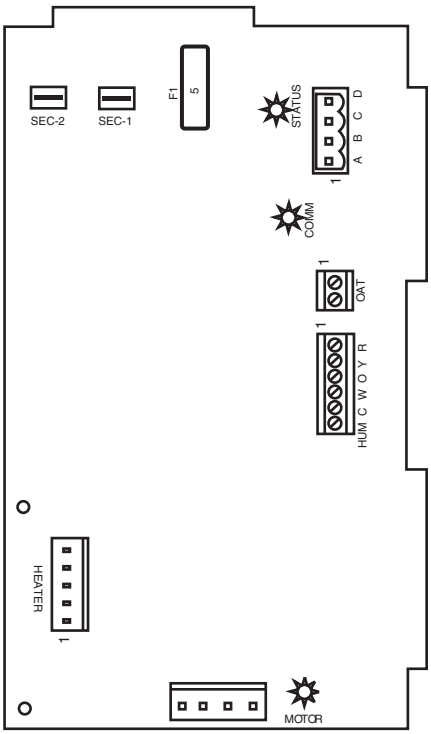

A03169

Fig. 15 - Detail of Fan Coil Board

Status Codes will be displayed on the STATUS LED using the following protocol:

1. The number of short flashes indicates first digit of code.
2. The number of long flashes indicates second digit of code.
3. A short flash is 0.25 seconds on. A long flash is 1 second on.
4. The time between flashes is 0.25 seconds.
5. The time between last short flash and first long flash is 1 second.
6. The LEDs will be off for 2.5 seconds before repeating code.

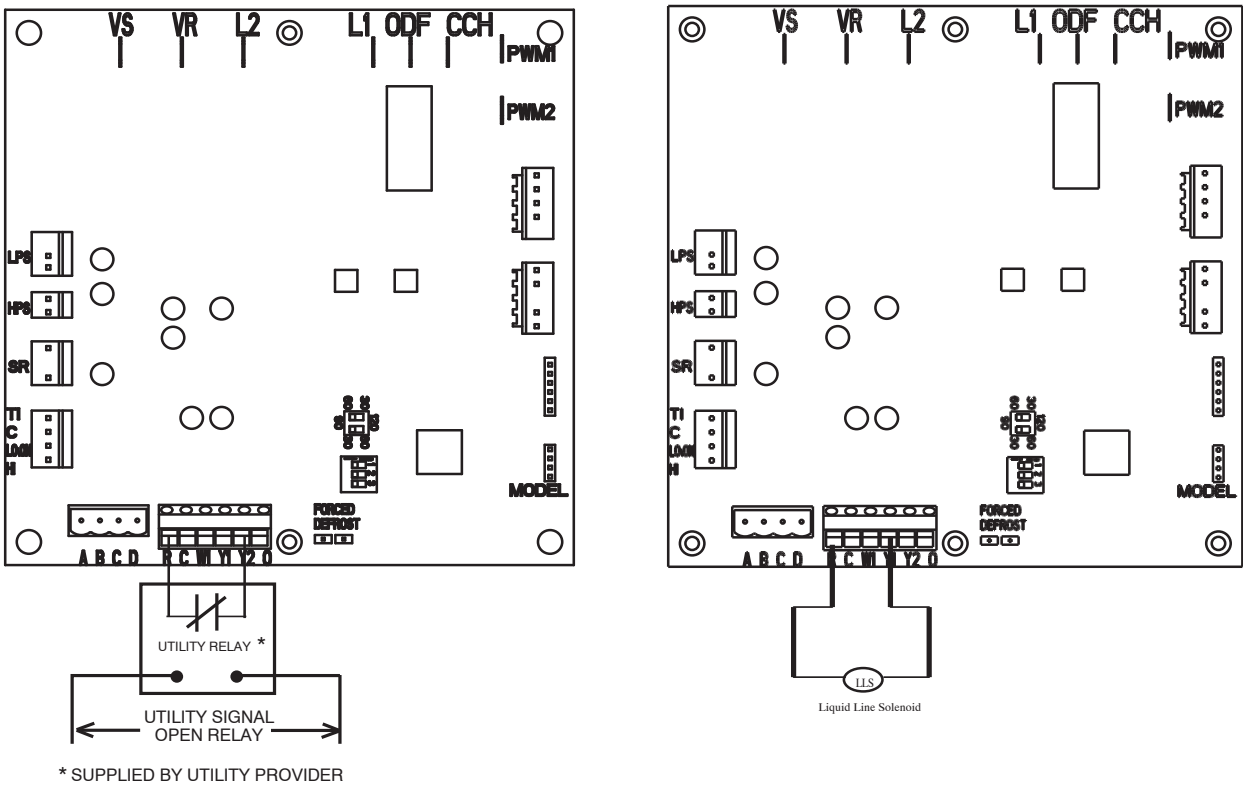

Fig. 16 - 2-Stage HP/AC Control Board

7. If multiple status codes are active concurrently, the highest priority status code is displayed.

On the Fan Coil board, a second amber LED located at the bottom center of the control board, adjacent to the motor harness plug, is the motor status LED, labeled MOTOR. The motor status LED will flash during normal blower operation.

B. Control Start-Up and System Communications Troubleshooting

On power up, green COMM LEDs will be turned off until successful system communications are established (this should happen within 10 seconds). Once communications with UI are successful, both COMM LEDs will be lit and held on. At the same time, amber STATUS LEDs will be lit and held continuously on until a request for operating mode is received. The STATUS LED will be on any time unit is in idle mode.

If, at any time, communications are not successful for a period exceeding 2 minutes, the Infinity control will only allow emergency heating or cooling operation using a common thermostat and the terminal strip connections on the two control boards (see Non-Communicating Emergency Cooling/Heating Mode) and will display Status Code 16, System Communication Fault, on amber STATUS LED. No further troubleshooting information will be available at UI until communications are re-established.

If either COMM LED does not light within proper time period and status codes are not displayed;

1. Check system transformer high- and low-voltage to be sure the system is powered.
2. Check ABCD connection on both boards.
3. Check fuse on fan coil board to be sure it is not blown. If fuse is open, check system wiring before replacing it to be sure a short does not cause a failure of replacement fuse.

If COMM LED does not light within proper time period and status code is displayed,

1. Check system wiring to be sure UI is powered and connections are made A to A, B to B, etc. and wiring is not shorted. Mis-wiring or shorting of the ABCD communications wiring will not allow successful communications.

NOTE: Shorting or mis-wiring low-voltage system wiring will not cause damage to unit control or UI but may cause low voltage fuse to open.

C. Indoor Fan Motor (IFM) Troubleshooting

The indoor fan is driven by an Electronic Computated Motor (ECM) motor which consists of two parts: the control module and the motor winding section. Do not assume motor or module is defective if it will not start. Use the designed-in LED information aids and follow troubleshooting steps described below before replacing motor control module or entire motor. Motor control module is available as a replacement part.

VERIFY MOTOR WINDING SECTION

⚠ WARNING

ELECTRICAL SHOCK HAZARD

Failure to follow this warning could result in personal injury or death.

After disconnecting power from the ECM motor, wait at least 5 minutes before removing the control section. Internal capacitors require time to discharge.

Before proceeding to replace a motor control module:

1. Check motor winding section to be sure it is functional.
2. Remove motor control module section and unplug winding plug. Motor shaft should turn freely, resistance between any two motor leads should be similar and resistance between any motor lead and unpainted motor end should exceed 100,000 ohms.
3. Failing any of these tests, entire ECM motor must be replaced.
4. Passing all of the tests, motor control module alone can be replaced.

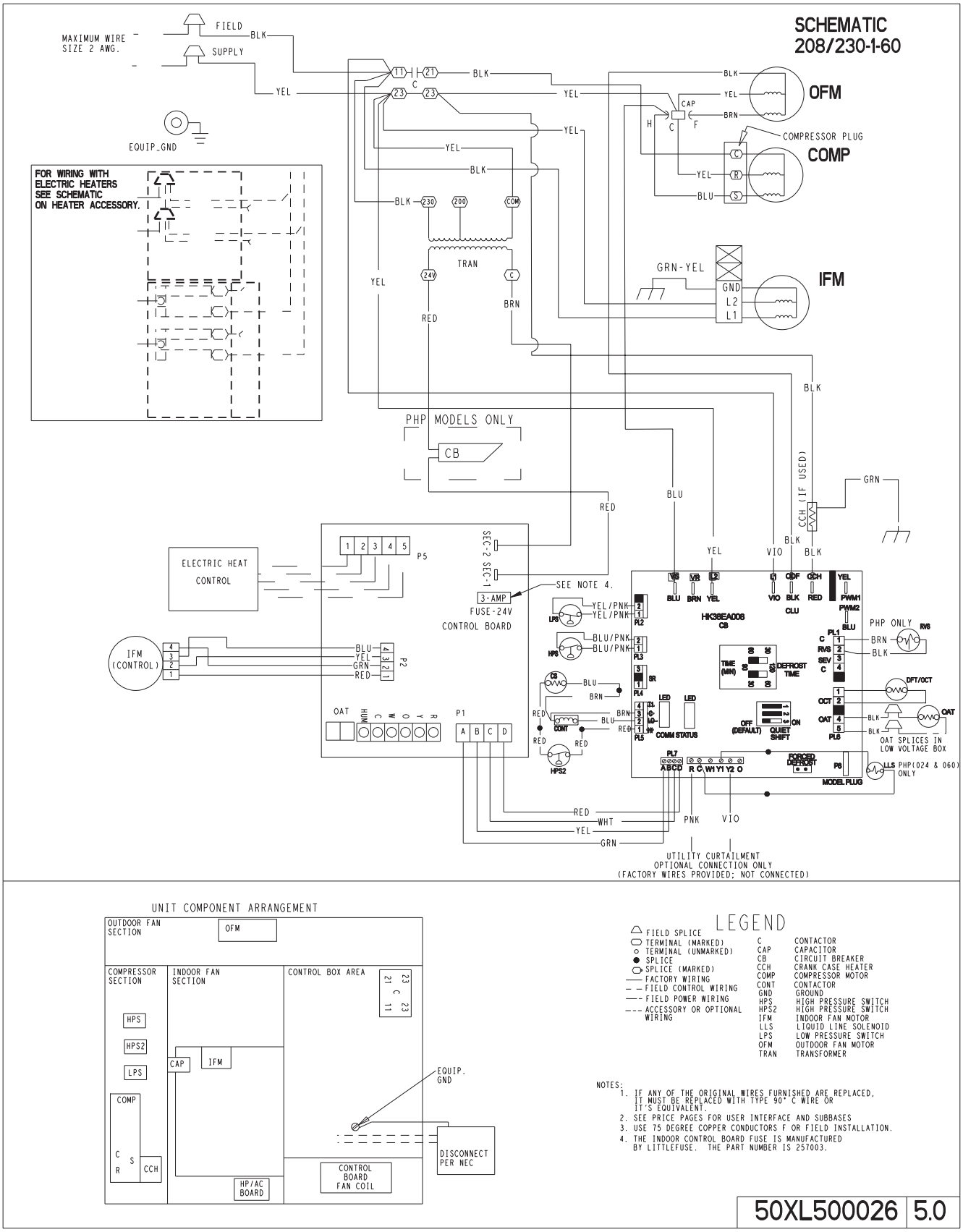

Fig. 17 - Wiring Schematic-50XL-A Single Phase

MOTOR TURNS SLOWLY

1. Low static pressure loading of blower while access panel is removed will cause blower to run slowly. Particularly at low airflow requests. This is normal, do not assume a fault exists.
2. Recheck airflow and system static pressure using UI service screens with access panel in place.

NOTE: Blower motor faults will not cause a lockout of blower operation. The fan coil control will attempt to run the blower motor as long as UI maintains a demand for airflow. The control will not operate electric heaters while a fault condition exists. The control communicates with the motor at least once every five seconds, even when the motor is idle. If, during operation, the control does not communicate with the motor for more than 25 seconds, the motor will shut itself down and wait for communications to be reestablished.

D. Using Fan Coil Control Motor LED in Troubleshooting

The MOTOR LED is connected to the blower motor communication line and works with the fan coil control microprocessor and the STATUS LED to provide unit operation and troubleshooting information. When the motor is commanded to operate, the MOTOR LED will be turned on and will flash each time instructions are sent to the motor. When the motor is commanded to stop, the MOTOR LED will be turned off.

If the MOTOR LED is lit, flashing, and the motor is running, or if the MOTOR LED is off and the motor is stopped, operation is normal and no motor fault exists.

If the MOTOR LED is lit, flashing, and the motor does not run, or if the MOTOR LED is off and the motor is running, check the STATUS LED for the Status Code. Refer to the troubleshooting instructions for the indicated Status Code in Section E, Fan Coil Control Troubleshooting.

E. Fan Coil Control Troubleshooting

Fan coil control faults indicated by flashing codes on the amber system STATUS LED can be resolved using troubleshooting information provided below. Codes are listed in order of their priority, highest to lowest. Though multiple faults can exist at any time, only the highest priority code will be displayed on STATUS LED. Clearing the indicated fault when multiple faults exist will cause the next highest priority Status Code to be flashed. All existing faults, as well as a fault history, can be viewed at UI.

STATUS CODE 45, CONTROL BOARD TEST FAULT

Fan coil control has failed internal start-up tests and must be replaced. No other service procedure will correct.

STATUS CODE 37, HEATER OUTPUT SENSED “ON” WHEN NOT ENERGIZED:

Fan coil control is provided with circuitry to detect presence of a 24-vac signal on electric heater stage 1 and stage 2 outputs.

If fan coil control detects a 24-vac signal on either heater stage output and it is not supplying signal, Status Code 37 will be displayed on STATUS LED. Control will turn off output and command blower motor to supply an airflow determined to be safe for current operation mode with electric heaters energized.

To find the fault:

1. Stop all system operations at UI and check heater stage 24-vac outputs.
2. Disconnect electric heater at power and check heater wiring for faults. See Status Code 36 for more information.

STATUS CODE 44, MOTOR COMMUNICATION FAULT

When motor is commanded to operate, the MOTOR LED will be turned on and will flash each time instructions are sent to the motor.

When the motor is commanded to stop, the MOTOR LED will be turned off. The MOTOR LED will not flash to indicate communications when it is turned off.

Fan coil control is constantly communicating with the motor, even when the motor and MOTOR LED are off. If motor does not acknowledge receipt of communications, the fan coil control will display Status Code 44 on STATUS LED and continue to try to communicate with the motor. If motor acknowledges communication, status code will be cleared.

If MOTOR LED is lit and flashing and motor does not run:

1. Check the STATUS LED. If STATUS LED is indicating a Status 44 code, check the motor wiring harness for proper connection to control and motor receptacles.
2. Check motor wiring harness to be sure all wiring complies with wiring diagram description, makes a complete circuit from connector to connector, and is not shorted.
3. Check 12-vdc low voltage supply to motor at pins 1 (+) and 2 (-) of motor header connection to fan coil control.

If all checks are normal, fan coil control is good and control module on motor may need replacement. Check motor and Motor Control Module following the instructions in Section C, Indoor Fan Motor Troubleshooting.

If the MOTOR LED is off, STATUS LED is indicating a Status Code 44 and motor is running:

1. Disconnect the motor harness at the fan coil control. If motor continues to run, fan coil control is good and control module on motor may need replacement.

STATUS CODE 25, INVALID MOTOR / MODEL SELECTION

On initial start-up, the fan coil control shall poll motor for its size data and check unit size data stored in the control memory.

1. If motor size is incorrect for unit size or size data is invalid, Status Code 25 will be displayed on STATUS LED.
2. If model size data is missing (as is the case when a replacement fan coil control board is installed), system UI will prompt installer to enter correct model size from a list of valid sizes.
3. If motor size is incorrect for model size, motor must be replaced with proper size motor. Fan coil control will not respond to operation requests until this fault condition is resolved.

STATUS CODE 26, INVALID HEATER SIZE

On initial power-up, fan coil control will write into memory electric heater size as read from heater if heater is provided with Identifier Resistor (IDR). Heater size must be valid for the installed unit. Fan coil control will read IDR value connected to pins 1 and 2 of heater harness connector. If no resistor is found, system UI will prompt installer to verify that no heater is installed. Verifying that this is correct will establish that the unit is operating without an electric heater accessory. Upon choosing negative option, installer will be prompted to select heater size installed from a list of valid heater sizes for unit size installed.

If heater ID resistor value read is invalid, Status Code 26 will be displayed on STATUS LED.

If heater installed is equipped with a resistor connected to pins 1 and 2 of heater harness connector and status code 26 is displayed on STATUS LED:

1. Check wiring harness connections to be sure connections are secure.
2. If symptoms persist, disconnect wiring harness at fan coil control board and check for a resistance value greater than 5000 ohms.
3. Check for proper wiring of resistor assembly.
4. Make sure heater size installed is an approved size for unit and size installed.

NOTE: Fan coil control will not operate electric heater until this Status Code is resolved. If the heater size is set through the UI, the heater will be operated as a single stage heater. If staging is desired, the IDR value must be read in by the unit control.

STATUS CODE 36, HEATER OUTPUT NOT SENSED WHEN ENERGIZED

Fan coil control is provided with circuitry to detect presence of a 24-vac signal on electric heater stage 1 and stage 2 outputs.

If fan coil control energizes either heater stage and does not detect the 24-vac signal on output, Status Code 36 will be displayed on the STATUS LED, control will continue to energize heater output(s) and adjust blower operation to a safe airflow level for energized electric heat stage(s).

To find the fault:

1. Check for 24-vac on heater stage outputs. Fan coil control or sensing circuit may be bad.

NOTE: It may be useful as an electric heater troubleshooting procedure to disconnect the system communications to force Status Code 16 enabling of emergency heat mode. It is difficult to know which heater output is energized or not energized in normal operation. When unit is operated in emergency heat mode using electric heaters, both outputs are energized and de-energized together. Terminal strip inputs to fan coil control can then be connected R to W to turn on both electric heat outputs. Heater output sensing circuits can then be checked to resolve Status Code 36 or 37 problems.

STATUS CODE 41, BLOWER MOTOR FAULT

If MOTOR LED is lit and flashing and motor does not run:

1. Check STATUS LED. If STATUS LED is indicating Status Code 41, motor control has detected that the motor will not come up to speed within 30 seconds of being commanded to run or that the motor has been slowed to below 250 rpm for more than 10 seconds after coming up to speed. Motor wiring harness and fan coil control are operating properly, do not replace.
2. Check to be sure that the blower wheel is not rubbing the housing.
3. Check motor to be sure that the motor shaft is not seized (motor control module must be removed and electronics disconnected from windings to perform this check properly).
4. Check motor windings section following instructions in Section C, Indoor Fan Motor Troubleshooting.

If all these checks are normal, the motor control module may need replacement.

STATUS CODE 16, SYSTEM COMMUNICATION FAULT

If, at any time, system communications are not successful for a period exceeding 2 minutes, the fan coil control will only allow emergency heating or cooling operation using a common thermostat, and the terminal strip connections and will display Status code 16 on the amber STATUS LED (see Non-Communicating Emergency Cooling/Heating Mode). No further unit troubleshooting information will be available at the UI until communications are re-established.

Check system wiring to be sure the UI is powered and connections are made A to A, B to B, etc., and wiring is not shorted. Mis-wiring or shorting of the ABCD communications wiring will not allow successful communications. Correcting wiring faults will clear the code and re-establish communications.

Shorting or mis-wiring the low voltage system wiring will not cause damage to unit control or to UI but may cause the low voltage fuse to open.

STATUS CODE 46, BROWNOUT CONDITION

If the secondary voltage of the transformer falls below 15-vac for a period exceeding 4 seconds, Status Code 46 will be displayed on STATUS LED and the UI will command the control board to turn off compressor.

When secondary voltage rises above 17-vac for more than 4 seconds, the brownout condition is cleared and normal system operation will resume subject to any minimum compressor off-delay function which may be in effect. Brownout does not affect blower or electric heater operation.

STATUS CODE 53, OUTDOOR AIR TEMPERATURE SENSOR FAULT

If an OAT sensor is found at power-up, input is constantly checked to be within a valid temperature range. If sensor is found to be open or shorted at any time after initial validation, Status Code 53 will be displayed at amber STATUS LED.

Check for faults in wiring connecting sensor to OAT terminals. Using an Ohm meter, check resistance of thermistor for a short or open condition.

If thermistor is shorted or open, replace it to return the system to normal operation. If fault is in the wiring connections, correcting the fault will clear the code and return the system to normal operation.

NOTE: If fault condition is an open thermistor or a wiring problem that appears to be an open thermistor and the power to the unit is cycled off, the fault code will be cleared on the next power-up but the fault will remain and system operation will not be as expected. **This is because on power-up, the unit control cannot discern the difference between an open sensor or if a sensor is not installed.**

F. HP/AC Control Troubleshooting

See Table 2 for HP/AC control board status codes and troubleshooting information.

Step 2 — Sequence of Operation

The 50XL-A packaged air conditioner is designed for installation with a communicating UI. This unit will not respond to commands provided by a common thermostat except under certain emergency situations described in Step 1—Start-Up.

The UI uses temperature, humidity and other data supplied from indoor and outdoor system components to control heating or cooling system for optimum comfort. The unit will be commanded by UI to supply airflow. The unit will operate the indoor fan at requested airflow for most modes.

The nominal requested airflow will be 350 cfm per ton of nominal cooling capacity as defined by unit size. Actual airflow request will be adjusted from nominal using indoor and outdoor temperature and indoor humidity data to optimize the system operation for occupant comfort and system efficiency. Refer to UI literature for further system control details.

Airflow during electric heater operation must be greater than a minimum level for safe operation. If UI instructs unit to turn on electric heat and the requested airflow is less than the minimum level the fan coil control will override requested value.

NOTE: Once the compressor has started and then has stopped, it should not be started again until 4 minutes have elapsed. The cooling cycle remains "on" until the room temperature drops to point that is slightly below the cooling control setting of the UI.

COOLING OPERATION

With a call for first stage cooling, the outdoor fan and low-stage compressor are energized. If low-stage cannot satisfy cooling demand, high-stage is energized by the User Interface. After second stage is satisfied, the unit returns to low-stage operation until first stage is satisfied or until second stage is required again. When both first stage and second stage cooling are satisfied, the compressor will shut off.

NOTE: When two-stage unit is operating at low stage, system vapor (suction) pressure will be higher than a standard single-stage system or high-stage operation.

NOTE: Outdoor fan motor will continue to operate for one minute after compressor shuts off, when outdoor ambient is greater than or equal to 100°F (38°C).

Table 2 – Heat Pump/Air Conditioner Board Status Codes

OPERATION	FAULT	AMBER LED FLASH CODE	POSSIBLE CAUSE AND ACTION
Standby – no call for unit operation	None	On solid, no flash	Normal operation
Emergency Mode	Standard Thermostat Control	Rapid, continuous flashing	Unit being controlled by standard thermostat inputs instead of Infinity Control. Only high stage operation is available. This operating mode should be used in emergency situations only.
Low Stage Cool/Heat Operation	None	1, pause	Normal operation
High Stage Cool/Heat Operation	None	2, pause	Normal operation
	System Communications Failure	16	Communication with UI lost. Check wiring to UI, indoor and outdoor units.
	Invalid Model Plug	25	Control does not detect a model plug or detects an invalid model plug. Unit will not operate without correct model plug.
	High–Pressure Switch Open	31	High–pressure switch trip. Check refrigerant charge, outdoor fan operation and coils for airflow restrictions.
	Low–Pressure Switch Open	32	Low–pressure switch trip. Check refrigerant charge and indoor air flow.
	Control Fault	45	Outdoor unit control board has failed. Control board needs to be replaced.
	Brown Out (230 v)	46	Line voltage < 187v for at least 4 seconds. Compressor and fan operation not allowed until voltage≥190v. Verify line voltage.
	No 230v at Unit	47	There is no 230v at the contactor when indoor unit is powered and cooling/heating demand exists. Verify the disconnect is closed and 230v wiring is connected to the unit.
	Outdoor Air Temp Sensor Fault	53	Outdoor air sensor not reading or out of range. Ohm out sensor and check wiring.
	Outdoor Coil Sensor Fault	55	Coil sensor not reading or out of range. Ohm out sensor and check wiring.
	Thermistors Out of Range	56	Improper relationship between coil sensor and outdoor air sensor. Ohm out sensors and check wiring.
	Low Stage Thermal Cutout	71	Compressor voltage sensed, then disappears while cooling or heating demand exists. Possible causes are internal compressor overload trip or start relay not releasing (if installed).
	High Stage Thermal Cutout	72	Compressor voltage sensed, then disappears while cooling or heating demand exists. Possible causes are internal compressor overload trip or start relay not releasing (if installed).
	Contactor Shorted	73	Compressor voltage sensed when no demand for compressor operation exists. Contactor may be stuck closed or there is a wiring error.
	No 230V at Compressor	74	Compressor voltage not sensed when compressor should be starting. Contactor may be stuck open or there is a wiring error.
	Low Stage Thermal Lockout	81	Thermal cutout occurs in three consecutive low/ high stage cycles. Low stage locked out for 4 hours or until 24v power recycled.
	High Stage Thermal Lockout	82	Thermal cutout occurs in three consecutive high/low stage cycles. High stage locked out for 4 hours or until 24v power recycled.
	Low–Pressure Lockout	83	Low–pressure switch trip has occurred during 3 consecutive cycles. Unit operation locked out for 4 hours or until 24v power recycled.
	High–Pressure Lockout	84	High–pressure switch trip has occurred during 3 consecutive cycles. Unit operation locked out for 4 hours or until 24v power recycled.

UTILITY INTERFACE WITH INFINITY CONTROL

The utility curtailment relay should be connected to factory supplied pigtails (PINK, connected to R, VIOLET connected to Y2 on the control board) located in the low voltage splice box (See Fig. 14, 16 and 17). This input allows a power utility device to interrupt compressor operation during peak load periods. When the utility sends a signal to shut the system down, the UI will display, "Curtailment Active".

COMPRESSOR OPERATION

When the compressor is operating in low stage, the modulating ring is de-activated, allowing two internal bypass ports to close off 33% of the scroll compression area so the system operates at part load capacity. The 24-volt solenoid coil is de-energized in low-stage operation.

When the compressor is operating at high stage, the modulating ring is activated, sealing the bypass ports, which allows the compressor to operate at full load capacity. The 24-volt solenoid coil is energized in high stage operation.

CRANKCASE HEATER OPERATION (IF APPLICABLE)

The crankcase heater is energized during off cycle below 65°F (18°C) outdoor air temperature.

OUTDOOR FAN MOTOR OPERATION

The outdoor unit control energizes the outdoor fan any time the compressor is operating. The outdoor fan remains energized if a pressure switch or compressor overload should open. Outdoor fan motor will continue to operate for one minute after the compressor shuts off when the outdoor ambient is greater than or equal to 100°F (38°C).

TIME DELAYS

The unit time delays include:

- Five minute time delay to start cooling operation when there is a call from the thermostat or UI. To bypass this feature, momentarily short and release Forced Defrost pins.
- Five minute compressor re-cycle delay on return from a brown-out condition.
- Two minute time delay to return to standby operation from last valid communication (with Infinity only).
- One minute time delay of outdoor fan at termination of cooling mode when outdoor ambient is greater than or equal to 100°F (38°C).
- There is no time delay between staging from low to high and from high to low capacity; the compressor will change from low to high and from high to low capacity as demand dictates.

INFINITY CONTROLLED LOW AMBIENT COOLING

NOTE: When this unit is operating below 55°F (13°C) outdoor temperature, provisions must be made for low ambient operation. This unit is capable of low ambient cooling down to 0°F (-18°C) ONLY when using the Infinity control. A low ambient kit is not required, and the outdoor fan motor does not need to be replaced for Infinity controlled low ambient operation. **Low ambient cooling must be enabled in the UI set-up.** Fan may not begin to cycle until about 40°F (4°C) OAT. Fan will cycle based on coil and outdoor air temperature. Infinity controlled low ambient mode operates as follows:

- In high stage, fan is off when outdoor coil temp is <(outdoor air temperature plus 3°F) (-16°C) or outdoor fan has been ON for 30 minutes. (Fan is turned off to allow refrigerant system to stabilize.)
- In low stage, fan is off when outdoor coil temp is <(outdoor air temperature plus 1°F) (6°C) or outdoor fan has been ON for 30 minutes. (Fan is turned off to allow refrigerant system to stabilize.)
- In high stage and low stage, fan is on when outdoor coil temp > (outdoor air temperature plus 25°F) (13.8°C) or outdoor coil temp > 80°F (27°C) or if outdoor fan has been OFF for 30 minutes. (Fan is turned on to allow refrigerant system to stabilize.)
- Low-pressure switch is ignored for first 3 minutes during low ambient start up. After 3 minutes, if LPS trips, then outdoor fan motor is turned off for 10 minutes, with the compressor running. If LPS closes within 10 minutes then cooling continues with the outdoor fan cycling per the coil temperature routine listed above for the remainder of the cooling cycle. If the LPS does not close within 10 minutes, then the normal LPS trip response (shut down cooling operation and generate LPS trip error) will occur.

Step 3 — Check for Refrigerant Leaks

Locate and repair refrigerant leaks and charge the unit as follows:

1. Use both high- and low-pressure ports to relieve system pressure and reclaim remaining refrigerant.
2. Repair leak following accepted practices.

NOTE: Install a filter drier whenever the system has been opened for repair.

3. Check system for leaks using an approved method.
4. Evacuate refrigerant system and reclaim refrigerant if no additional leaks are found.
5. Charge unit with Puron (R-410A) refrigerant, using an accurate scale. Refer to unit rating plate for required charge.

Step 4 — Start-Up Adjustments

Complete the required procedures given in the Pre-Start-Up section before starting the unit. Do not jumper any safety devices when operating the unit. Do not operate the unit in cooling mode when the outdoor temperature is below 40°F (4°C) (unless low-ambient operation is enabled in the UI). Do not rapid cycle the compressor. Allow 5 min. between "on" cycles to prevent compressor damage.

CHECKING COOLING AND HEATING CONTROL OPERATION

See UI Installation Instructions for detailed system CHECKOUT.

CHECKING AND ADJUSTING REFRIGERANT CHARGE

The refrigerant system is fully charged with Puron (R-410A) refrigerant and is tested and factory sealed.

NOTE: Any adjustment to refrigerant charge must be done with unit operating in HIGH stage.

NOTE: Adjustment of the refrigerant charge is not required unless the unit is suspected of not having the proper R-410A charge. The charging label and the tables shown refer to system temperatures and pressures in cooling mode only. A refrigerant charging label is attached to the outside of the unit.

IMPORTANT: When evaluating the refrigerant charge, an indicated adjustment to the specified factory charge must always be very minimal. If a substantial adjustment is indicated, an abnormal condition exists somewhere in the cooling system, such as insufficient airflow across either coil or both coils.

REFRIGERANT CHARGE

The amount of refrigerant charge is listed on the unit rating plate and/or the physical data table. Refer to the Refrigeration Service Techniques Manual, Refrigerants Section.

NO CHARGE

Check for leak. Use standard evacuating techniques. After evacuating system, weigh in the specified amount of refrigerant (refer to system rating plate).

LOW CHARGE COOLING

Use Cooling Charging Chart (Fig. 19). Vary refrigerant until the conditions of the chart are met. Note that charging charts are different from type normally used. Charts are based on charging the units to correct subcooling for the various operating conditions. Accurate pressure gauge and temperature sensing devices are required. Connect the pressure gauge to the service port on the suction line. Mount the temperature sensing device on the suction line and insulate it so that the outdoor ambient does not affect the reading. Indoor air CFM must be within the normal operating range of the unit.

TO USE COOLING CHARGING CHARTS

Take the liquid line temperature and read the manifold pressure gauges.

Refer to the chart to determine what the liquid line temperature should be.

NOTE: If the problem causing the inaccurate readings is a refrigerant leak, refer to Check for Refrigerant Leaks section.

INDOOR AIRFLOW AND AIRFLOW ADJUSTMENTS

NOTE: Be sure that all supply- and return-air grilles are open, free from obstructions, and adjusted properly.

The 50XL-A unit utilizes state of the art ECM (Electronic Computated Motor) ID Blower Motors. See UI instructions for detailed information on adjusting airflow.

NON-COMMUNICATING EMERGENCY COOLING / HEATING MODE

This mode of operation is provided only in the case where the UI has failed or is otherwise unavailable. If communications cannot be established with the UI, the Infinity fan coil board will enable the R, C, Y, and W input terminals to allow simple thermostatic control of the 50XL-A unit.

For control with a standard thermostat, disconnect the ABCD connectors from both control boards and make the connections between the standard thermostat, the fan coil board, and the HP/AC board per Fig. 18. Recommend the use of interconnecting wire with 105C, 600V, 2/64" insulation.

The Infinity control will respond to cooling and heating demands with the maximum safe airflow based on electric heat size (if applicable) and unit capacity.

MAINTENANCE

To ensure continuing high performance, and to minimize the possibility of premature equipment failure, periodic maintenance must be performed on this equipment. This packaged air conditioner unit should be inspected at least once each year by a qualified service person. To troubleshoot unit, refer to Table 7, Troubleshooting Chart.

NOTE TO EQUIPMENT OWNER: Consult your local dealer about the availability of a maintenance contract.

⚠ WARNING

PERSONAL INJURY AND UNIT DAMAGE HAZARD

Failure to follow this warning could result in personal injury or death and possible unit component damage.

The ability to properly perform maintenance on this equipment requires certain expertise, mechanical skills, tools and equipment. If you do not possess these, do not attempt to perform any maintenance on this equipment, other than those procedures recommended in the Owner's Manual.

⚠ WARNING

ELECTRICAL SHOCK HAZARD

Failure to follow these warnings could result in personal injury or death:

1. Turn off electrical power to the unit before performing any maintenance or service on this unit.
2. Use extreme caution when removing panels and parts.
3. Never place anything combustible either on or in contact with the unit.

⚠ CAUTION

CUT HAZARD

Failure to follow this caution may result in personal injury.

When removing access panels or performing maintenance functions inside your unit, be aware of sharp sheet metal parts and screws. Although special care is taken to reduce sharp edges to a minimum, be extremely careful when handling parts or reaching into the unit.

⚠ CAUTION

UNIT OPERATION HAZARD

Failure to follow this caution may result in equipment damage or improper operation.

Errors made when reconnecting wires may cause improper and dangerous operation. Label all wires prior to disconnecting when servicing.

The minimum maintenance requirements for this equipment are as follows:

1. Inspect air filter(s) each month. Clean or replace when necessary.
2. Inspect indoor coil, drain pan, and condensate drain each cooling season for cleanliness. Clean when necessary.
3. Inspect blower motor and wheel for cleanliness each cooling season. Clean when necessary.
4. Check electrical connections for tightness and controls for proper operation each cooling season. Service when necessary.

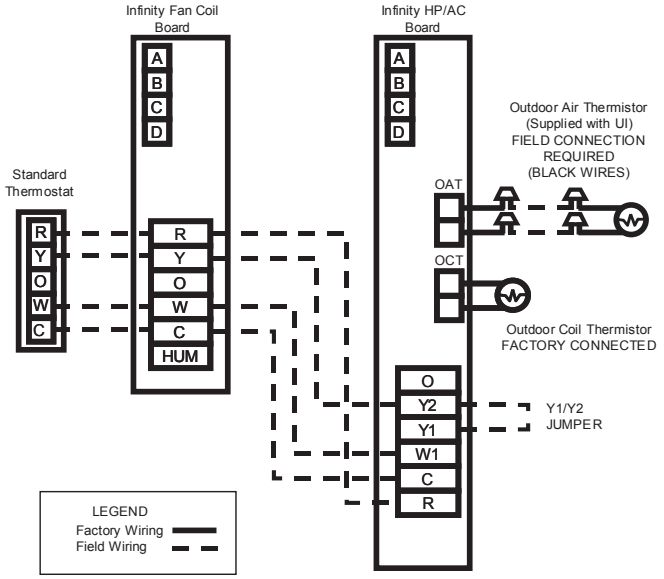

A06283

Fig. 18 - Non-Communicating Emergency Cooling/Heating Wiring Connections

Required Subcooling °F(°C)					
Model Size	Outdoor Ambient Temperature °F(°C)				
	75 (24)	85 (29)	95 (35)	105 (41)	115 (46)
24	16 (8.7)	16 (8.7)	16 (8.7)	16 (8.7)	16 (8.7)
30	17 (9.3)	16 (9)	16 (8.7)	15 (8.3)	15 (8.2)
36	14 (7.8)	14 (7.7)	14 (7.7)	14 (7.6)	14 (7.6)
42	19 (10.7)	19 (10.6)	19 (10.5)	19 (10.4)	19 (10.3)
48	21 (11.7)	21 (11.5)	20 (11.3)	20 (11.2)	20 (11.1)
60	17 (9.4)	17 (9.4)	17 (9.4)	17 (9.4)	17 (9.4)

Charging Procedure

1- Measure Discharge line pressure by attaching a gauge to the service port.

2- Measure the Liquid line temperature by attaching a temperature sensing device to it.

3- Insulate the temperature sensing device so that the Outdoor Ambient doesn't affect the reading.

4- Refer to the required Subcooling in the table based on the model size and the Outdoor Ambient temperature.

5- Interpolate if the Outdoor ambient temperature lies in between the table values.

6- Find the Pressure Value in the table corresponding to the the measured Pressure of the Compressor Discharge line.

7- Read across from the Pressure reading to obtain the Liquid line temperature for a required Subcooling

8- Add Charge if the measured temperature is higher than the table value.

9 - Remove charge if the measured temperature is lower than the table value.

50DU500166 REV 3.0

Required Liquid Line Temperature for a Specific Subcooling (R-410A)											
Pressure (psig)	Required Subcooling (°F)					Pressure (kPa)	Required Subcooling (°C)				
	5	10	15	20	25		3	6	8	11	14
189	61	56	51	46	41	1303	16	13	11	8	5
196	63	58	53	48	43	1351	17	15	12	9	6
203	66	61	56	51	46	1399	19	16	13	10	8
210	68	63	58	53	48	1448	20	17	14	11	9
217	70	65	60	55	50	1496	21	18	15	13	10
224	72	67	62	57	52	1544	22	19	16	14	11
231	74	69	64	59	54	1593	23	20	18	15	12
238	76	71	66	61	56	1641	24	21	19	16	13
245	77	72	67	62	57	1689	25	22	20	17	14
252	79	74	69	64	59	1737	26	23	21	18	15
260	81	76	71	66	61	1792	27	25	22	19	16
268	83	78	73	68	63	1848	29	26	23	20	17
276	85	80	75	70	65	1903	30	27	24	21	19
284	87	82	77	72	67	1958	31	28	25	22	20
292	89	84	79	74	69	2013	32	29	26	23	21
300	91	86	81	76	71	2068	33	30	27	24	22
309	93	88	83	78	73	2130	34	31	28	26	23
318	95	90	85	80	75	2192	35	32	29	27	24
327	97	92	87	82	77	2254	36	33	31	28	25
336	99	94	89	84	79	2316	37	34	32	29	26
345	101	96	91	86	81	2378	38	35	33	30	27
354	103	98	93	88	83	2440	39	36	34	31	28
364	105	100	95	90	85	2509	40	38	35	32	29
374	107	102	97	92	87	2578	41	39	36	33	30
384	108	103	98	93	88	2647	42	40	37	34	31
394	110	105	100	95	90	2716	44	41	38	35	32
404	112	107	102	97	92	2785	45	42	39	36	33
414	114	109	104	99	94	2854	46	43	40	37	34
424	116	111	106	101	96	2923	47	44	41	38	35
434	118	113	108	103	98	2992	48	45	42	39	36
444	119	114	109	104	99	3061	48	46	43	40	37
454	121	116	111	106	101	3130	49	47	44	41	38
464	123	118	113	108	103	3199	50	48	45	42	39
474	124	119	114	109	104	3268	51	48	46	43	40
484	126	121	116	111	106	3337	52	49	47	44	41
494	127	122	117	112	107	3406	53	50	47	45	42
504	129	124	119	114	109	3475	54	51	48	46	43
514	131	126	121	116	111	3544	55	52	49	46	44
524	132	127	122	117	112	3612	56	53	50	47	45
534	134	129	124	119	114	3681	56	54	51	48	45

A09109

Fig. 19 - Cooling Charging Table-Subcooling

Table 3 – Wet Coil Pressure Drop (IN. W.C.)

UNIT SIZE	STANDARD CFM (SCFM)															
	600	700	800	900	1000	1100	1200	1300	1400	1500	1600	1700	1800	1900	2000	2100
24	0.005	0.007	0.010	0.012	0.015	–	–	–	–	–	–	–	–	–	–	–
30	–	0.007	0.010	0.012	0.015	0.018	0.021	0.024	–	–	–	–	–	–	–	–
36	–	–	–	0.019	0.023	0.027	0.032	0.037	0.042	0.047	–	–	–	–	–	–
42	–	–	–	–	0.014	0.017	0.020	0.024	0.027	0.031	0.035	0.039	0.043	–	–	–
48	–	–	–	–	–	–	0.027	0.032	0.036	0.041	0.046	0.052	0.057	0.063	0.068	–
60	–	–	–	–	–	–	–	–	–	0.029	0.032	0.036	0.040	0.045	0.049	0.053

Table 4 – Filter Pressure Drop Table (IN. W.C.)

FILTER SIZE in. (mm)	CFM																		
	500	600	700	800	900	1000	1100	1200	1300	1400	1500	1600	1700	1800	1900	2000	2100	2200	2300
20X20X1 (508x508x25)	0.05	0.07	0.08	0.1	0.12	0.13	0.14	0.15	—	—	—	—	—	—	—	—	—	—	—
24X30X1 (610x762x25)	—	—	—	—	0.05	0.6	0.07	0.07	0.08	0.09	0.1	—	—	—	—	—	—	—	—
24X36X1 (610x914x25)	—	—	—	—	—	—	—	0.06	0.07	0.07	0.08	0.09	0.09	0.10	0.11	0.12	0.13	0.14	0.14

Table 5 – Electric Heat Pressure Drop Table (IN. W.C.)
Small Cabinet: 24-30

	CFM											
	500	600	700	800	900	1000	1100	1200	1300	1400	1500	1600
5 kw	0.00	0.00	0.00	0.00	0.00	0.00	0.00	0.00	0.02	0.04	0.06	0.07
7.2 kw	0.00	0.00	0.00	0.00	0.00	0.00	0.02	0.03	0.05	0.07	0.08	0.09
10 kw	0.00	0.00	0.00	0.00	0.00	0.02	0.04	0.06	0.07	0.09	0.10	0.11
15 kw	0.00	0.00	0.00	0.02	0.04	0.06	0.08	0.10	0.12	0.14	0.16	0.18

Table 6 – Electric Heat Pressure Drop Table (IN. W.C.)
Large Cabinet: 36-60

	CFM														
	1100	1200	1300	1400	1500	1600	1700	1800	1900	2000	2100	2200	2300	2400	2500
5kw	0.00	0.00	0.00	0.01	0.02	0.03	0.04	0.05	0.06	0.07	0.08	0.09	0.10	0.11	0.12
7.2 kw	0.00	0.00	0.01	0.02	0.03	0.04	0.05	0.06	0.07	0.08	0.09	0.10	0.11	0.12	0.13
10 kw	0.00	0.00	0.01	0.02	0.03	0.04	0.05	0.06	0.07	0.08	0.09	0.10	0.11	0.12	0.13
15 kw	0.00	0.02	0.03	0.04	0.05	0.06	0.07	0.08	0.09	0.10	0.11	0.12	0.13	0.14	0.15
20 kw	0.02	0.03	0.04	0.05	0.06	0.07	0.08	0.09	0.10	0.11	0.12	0.13	0.14	0.15	0.16

Step 1 — Air Filter

IMPORTANT: Never operate the unit without a suitable air filter in the return-air duct system. Always replace the filter with the same dimensional size and type as originally installed. See Table 1 for recommended filter sizes.

Inspect air filter(s) at least once each month and replace (throwaway-type) or clean (cleanable-type) at least twice during each cooling season and twice during the heating season, or whenever the filter becomes clogged with dust and lint.

Step 2 — Indoor Fan and Motor (IFM)

NOTE: All motors are pre-lubricated. Do not attempt to lubricate these motors.

For longer life, operating economy, and continuing efficiency, clean accumulated dirt and grease from the blower wheel and motor annually.

⚠ WARNING

ELECTRICAL SHOCK HAZARD

Failure to follow this warning could result in personal injury or death.

Disconnect and tag electrical power to the unit before cleaning and lubricating the blower motor and wheel.

Step 3 — Outdoor Coil, Indoor Coil, and Condensate Drain Pan

Inspect the condenser coil, evaporator coil, and condensate drain pan at least once each year.

The coils are easily cleaned when dry; therefore, inspect and clean the coils either before or after each cooling season. Remove all obstructions, including weeds and shrubs, that interfere with the airflow through the condenser coil. Straighten bent fins with a fin comb. If coated with dirt or lint, clean the coils with a vacuum cleaner, using the soft brush attachment. Be careful not to bend the fins. If coated with oil or grease, clean the coils with a mild detergent and water solution. Rinse coils with clear water, using a garden hose. Be careful not to splash water on motors, insulation, wiring, or air filter(s). For best results, spray condenser coil fins from inside to outside the unit. On units with an outer and inner condenser coil, be sure to clean between the coils. Be sure to flush all dirt and debris from the unit base.

Inspect the drain pan and condensate drain line when inspecting the coils. Clean the drain pan and condensate drain by removing all foreign matter from the pan. Flush the pan and drain trough with clear water. Do not splash water on the insulation, motor, wiring, or air filter(s). If the drain trough is restricted, clear it with a “plumbers snake” or similar probe device.

Step 4 — Outdoor Fan

⚠ CAUTION

UNIT OPERATION HAZARD

Failure to follow this caution may result in damage to unit components.

Keep the condenser fan free from all obstructions to ensure proper cooling operation. Never place articles on top of the unit.

1. Remove 4 screws holding outdoor grille and motor to top cover.
2. Turn motor/grille assembly upside down on top cover to expose fan blade.
3. Inspect the fan blades for cracks or bends.
4. If fan needs to be removed, loosen setscrew and slide fan off motor shaft.
5. When replacing fan blade, position blade according to the table shown in Fig. 20.
6. Ensure that set screw engages the flat area on the motor shaft when tightening.
7. Replace grille.

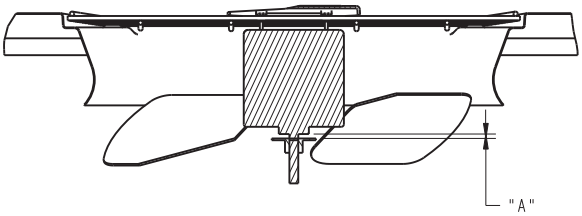

Infinity Top

A06035

UNIT SIZE	"A" DIM. IN (MM)
24	1 (26)
30	1 (26)
36	1 (26)
42	1 (26)
48	11/32 (9)
60	9/16 (14)

Fig. 20 - Outdoor Fan Blade Clearance

Step 5 — Electrical Controls and Wiring

Inspect and check the electrical controls and wiring annually. Be sure to turn off the electrical power to the unit.

Remove access panel to locate all the electrical controls and wiring. Check all electrical connections for tightness. Tighten all screw connections. If any smoky or burned connections are noticed, disassemble the connection, clean all the parts, re-strip the wire end and reassemble the connection properly and securely.

After inspecting the electrical controls and wiring, replace all the panels. Start the unit, and observe at least one complete cooling cycle to ensure proper operation. If discrepancies are observed in operating cycle, or if a suspected malfunction has occurred, check each electrical component with the proper electrical instrumentation. Refer to the unit wiring label when making these checks.

Step 6 — Refrigerant Circuit

Inspect all refrigerant tubing connections and the unit base for oil accumulation annually. Detecting oil generally indicates a refrigerant leak.

If oil is detected or if low performance is suspected, leak test all refrigerant tubing using an electronic leak detector, or liquid-soap solution. If a refrigerant leak is detected, refer to Check for Refrigerant Leaks section.

If no refrigerant leaks are found and low performance is suspected, refer to Checking and Adjusting Refrigerant Charge section.

Step 7 — Indoor Airflow

The heating and/or cooling airflow does not require checking unless improper performance is suspected. If a problem exists, be sure that all supply- and return-air grilles are open and free from obstructions, and that the air filter is clean.

Step 8 — Metering Devices-TXV

This unit uses a TXV-type metering device. No maintenance should be required.

Step 9 — Pressure Switches

Pressure switches are protective devices integrated into the control circuit (low voltage). They shut off compressor if abnormally high or low pressures are present in the refrigeration circuit. These pressure switches are specifically designed to operate with Puron (R-410A) systems. R-22 pressure switches must not be used as replacements for the Puron (R-410A) system.

Loss-of-Charge (Low Pressure) Switch

This switch is located on the liquid line and protects against low suction pressures caused by such events as loss of charge, low airflow across indoor coil, dirty filters, etc. It opens if the system pressure drops to about 20 psig. If system pressure is above this, switch should be closed.

High-Pressure Switches (HPS & HPS2)

The high-pressure switches are located on the discharge line and protects against excessive condenser coil pressure. HPS opens at 670 psig shutting down the compressor, while HPS2 opens at 565, limiting the compressor to low-stage operation only.

High pressure may be caused by a dirty outdoor coil, failed fan motor, or outdoor air recirculation.

To check switches:

1. Turn off all power to unit.
2. Disconnect leads on switch.
3. Apply ohm meter leads across switch. You should have continuity on a good switch.

NOTE: Because these switches are attached to refrigeration system under pressure, it is not advisable to remove this device for troubleshooting unless you are reasonably certain that a problem exists. If switch must be removed, remove and recover all system charge so that pressure gauges read 0 psi. Never open system without breaking vacuum with dry nitrogen.

Step 10 — Copeland Scroll Compressor (Puron Refrigerant)

The compressor used in this product is specifically designed to operate with Puron (R-410A) refrigerant and cannot be interchanged.

The compressor is an electrical (as well as mechanical) device. Exercise extreme caution when working near compressors. Power should be shut off, if possible, for most troubleshooting techniques. Refrigerants present additional safety hazards.

⚠ WARNING

EXPLOSION, FIRE HAZARD

Failure to follow this warning could result in personal injury or death and/or property damage.

Wear safety glasses and gloves when handling refrigerants. Keep torches and other ignition sources away from refrigerants and oils.

The scroll compressor pumps refrigerant throughout the system by the interaction of a stationary and an orbiting scroll. The scroll compressor has no dynamic suction or discharge valves, and it is more tolerant of stresses caused by debris, liquid slugging, and flooded starts. The compressor is equipped with a noise reducting shutdown device and an internal pressure-relief port. The pressure-relief port is a safety device, designed to protect against extreme high pressure. The relief port has an operating range between 550 and 625 psi differential pressure.

Step 11 — Refrigerant System

This step covers the refrigerant system of the 50XL-A, including the compressor oil needed, servicing systems on roofs containing synthetic materials, the filter drier, and refrigerant charging.

REFRIGERANT

⚠ WARNING

PROPERTY, PERSONAL OR ENVIRONMENTAL HAZARD

Failure to follow this warning could result in personal injury or equipment damage.

This system uses Puron (R-410A) refrigerant which has higher operating pressures than R-22 and other refrigerants. No other refrigerant may be used in this system. Gauge set, hoses, and recovery system must be designed to handle Puron. If you are unsure, consult the equipment manufacturer.

COMPRESSOR OIL

If additional oil is needed use Uniqema RL32-3MAF. If this oil is not available, use Copeland Ultra 32CC or Mobil Artic EAL22CC. This oil is extremely hygroscopic, meaning it absorbs water readily. POE oils can absorb 15 times as much water as other oils designed for HCFC and CFC refrigerants. Take all necessary precautions to avoid exposure of the oil to the atmosphere.

SERVICING SYSTEMS ON ROOFS WITH SYNTHETIC MATERIALS

POE (polyolester) compressor lubricants are known to cause long term damage to some synthetic roofing materials.

Exposure, even if immediately cleaned up, may cause embrittlement (leading to cracking) to occur in one year or more. When performing any service that may risk exposure of compressor oil to the roof, take appropriate precautions to protect roofing. Procedures which risk oil leakage include, but are not limited to, compressor replacement, repairing refrigerant leaks, and replacing refrigerant components such as filter drier, pressure switch, metering device, coil, accumulator, or reversing valve.

Synthetic Roof Precautionary Procedure

1. Cover extended roof working area with an impermeable polyethylene (plastic) drip cloth or tarp. Cover an approximate 10x10 ft (3x3 m) area.
2. Cover area in front of the unit service panel with a terry cloth shop towel to absorb lubricant spills and prevent run-offs, and protect drop cloth from tears caused by tools or components.
3. Place terry cloth shop towel inside unit immediately under component(s) to be serviced and prevent lubricant run-offs through the louvered openings in the unit base.
4. Perform required service.
5. Remove and dispose of any oil-contaminated material per local codes.

LIQUID-LINE FILTER DRIER

The filter drier is specifically designed to operate with Puron. Use only factory-authorized components. Filter drier must be replaced whenever the refrigerant system is opened. When removing a filter drier, use a tubing cutter to cut the drier from the system. Do not unsweat a filter drier from the system. Heat from unsweating will release moisture and contaminants from drier into system.

PURON (R-410A) REFRIGERANT CHARGING

Refer to unit information plate and charging chart. **Some R-410A refrigerant cylinders contain a dip tube to allow liquid refrigerant to flow from cylinder in upright position.** For cylinders equipped with a dip tube, charge Puron units with cylinder in upright position and a commercial metering device in manifold hose. Charge refrigerant into suction line.

TROUBLESHOOTING

LED DESCRIPTION

LEDs built into Infinity control boards provide installer or service person information concerning operation and/or fault condition of the unit controls and ECM motor. This information is also available at the system UI in text with basic troubleshooting instructions. Careful use of information displayed will reduce the need for extensive manual troubleshooting. See section B and Table 2, as well as the UI instructions, for additional information. Additional Troubleshooting information can be found in Table 7.

MAJOR COMPONENTS

2-STAGE HP/AC BOARD

The two-stage HP/AC control board controls the following functions:

- Low- and high-stage compressor operation
- Outdoor fan motor operation
- Low ambient cooling
- Crankcase heater operation
- Compressor external protection
- Pressure switch monitoring
- Time delays

FAN COIL BOARD

The fan coil board controls the following functions:

- Indoor fan operation
- Electric heat (if applicable)

SYSTEMS COMMUNICATION FAILURE

If communication with the Infinity Control is lost with the UI, the controls will flash the appropriate fault codes. Check the wiring to the UI, indoor and outdoor units.

MODEL PLUG

The HP/AC control board must have a valid model plug to operate. If a valid model plug is not detected, it will not operate and the control will flash the appropriate fault code, shown in Table 2.

PRESSURE SWITCH PROTECTION

The unit is equipped with high- and low-pressure switches. If the control senses the opening of a high or low pressure switch, it will respond as follows:

1. De-energize the compressor contactor (HPS1 & LPS) or the compressor solenoid contactor (HPS2).
2. Keep the outdoor fan operating for 15 minutes.
3. Display the appropriate fault codes.
4. After a 15 minute delay, if there is still a call for cooling and the LPS or HPS is reset, the compressor contactor is energized.
5. If LPS or HPS has not closed after a 15 minute delay, the outdoor fan is turned off. If the open switch closes anytime after the 15-minute delay, then resume operation with a call for cooling.
6. If LPS or HPS trips 3 consecutive cycles, the unit operation is locked out for 4 hours.
7. In the event of a high-pressure switch trip or high pressure lockout, check the refrigerant charge, outdoor fan operation and outdoor coil for airflow restrictions.

8. In the event of a low-pressure switch trip or low pressure lockout, check the refrigerant charge and indoor airflow.

CONTROL FAULT

If the HP/AC control board has failed, the control will flash the appropriate fault code (See Table 2). The control board should be replaced.

BROWN OUT PROTECTION

If the line voltage is less than 187v for at least 4 seconds, the appropriate compressor contactor and fan relay are de-energized. Compressor and fan operation are not allowed until voltage is a minimum of 190v. The control will flash the appropriate fault code (See Table 2).

230V LINE (POWER DISCONNECT) DETECTION

If there is no 230v at the compressor contactor when the unit is powered and cooling demand exists, the appropriate error code is displayed. Verify that the disconnect is closed and 230v wiring is connected to the unit.

COMPRESSOR VOLTAGE SENSING

The control board input terminals VS and L2 (See Fig. 16) are used to detect compressor voltage status, and alert the user of potential problems. The control continuously monitors the high voltage on the run capacitor of the compressor motor. Voltage should be present any time the compressor contactor is energized, and voltage should not be present when the contactor is de-energized.

CONTACTOR SHORTED DETECTION

If there is compressor voltage sensed when there is no demand for compressor operation, the contactor may be stuck closed or there is a wiring error. The control will flash the appropriate fault code.

COMPRESSOR THERMAL CUTOUT

If the control senses the compressor voltage after start-up, and is then absent for 10 consecutive seconds while cooling demand exists, the thermal protector is open. The control de-energizes the compressor contactor for 15 minutes, but continues to operate the outdoor fan. The control Status LED will flash the appropriate code shown in Table 2. After 15 minutes, with a call for low or high stage cooling, the compressor contactor is energized. If the thermal protector has not re-set, the outdoor fan is turned off. If the call for cooling continues, the control will energize the compressor contactor every 15 minutes. If the thermal protector closes (at the next 15 minute interval), check the unit will resume operation.

If the thermal cutout trips for three consecutive cycles, then unit operation is locked out for 4 hours and the appropriate fault code is displayed.

NO 230V AT COMPRESSOR

If the compressor voltage is not sensed when the compressor should be starting, the contactor may be stuck open or there is a wiring error. The control will flash the appropriate fault code. Check the contactor and control box wiring.

TROUBLESHOOTING UNIT FOR PROPER SWITCHING BETWEEN LOW & HIGH STAGES

Check the suction pressures at the service valves. Suction pressure should be reduced by 3-10% when switching from low to high capacity.

NOTE: The liquid pressures are very similar between low and high stage operation, so liquid pressure should not be used for troubleshooting.

Compressor current should increase 20-45% when switching from low to high stage. The compressor solenoid, when energized in high stage, should measure 24vac.

COMPRESSOR INTERNAL RELIEF

The compressor is protected by an internal pressure relief (IPR) which relieves discharge gas into compressor shell when differential between suction and discharge pressures exceeds 550 - 625 psi. The compressor is also protected by an internal overload attached to motor windings.

TEMPERATURE THERMISTORS

Thermistors are electronic devices which sense temperature. As the temperature increases, the resistance decreases. Thermistors are used to sense outdoor ambient (OAT) and coil temperature (OCT). Refer to Fig. 21 for resistance values versus temperature. See Fig. 22 for OCT location.

If the outdoor ambient or coil thermistor should fail, the HP/AC control will flash the appropriate fault code (See Table 2).

IMPORTANT: Coil thermistor is factory mounted. Check to insure thermistor is mounted properly. Outdoor air thermistor (OAT) is field mounted and connected. Verify that the OAT has been properly installed.

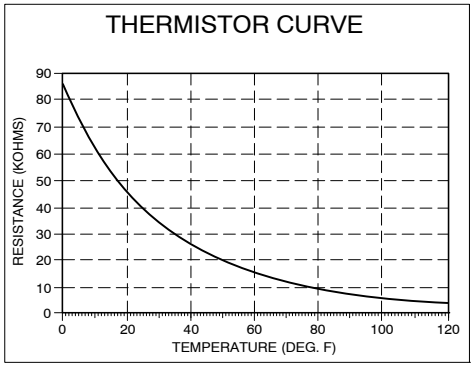

A91431

Fig. 21 - Resistance Values Versus Temperature

THERMISTOR SENSOR COMPARISON

The control continuously monitors and compares the outdoor air temperature sensor and outdoor coil temperature sensor to ensure proper operating conditions. The comparison is:

- If the outdoor air sensor indicates ≥ 10°F (5.5°C) warmer than the coil sensor (or) the outdoor air sensor indicates ≥ 20 °F (11.0°C) cooler than the coil sensor, the sensors are out of range.

If the sensors are out of range, the control will flash the appropriate fault code as shown in Table 2.

The thermistor comparison is not performed during low ambient cooling operation.

FAILED THERMISTOR DEFAULT OPERATION

Factory defaults have been provided in the event of failure of outdoor air thermistor and/or coil thermistor.

If the OAT sensor should fail, low ambient cooling will not be allowed and the one-minute outdoor fan off delay will not occur.

If the OCT sensor should fail, low ambient cooling will not be allowed.

Refer to the Troubleshooting Chart (Table 7) for additional troubleshooting information.

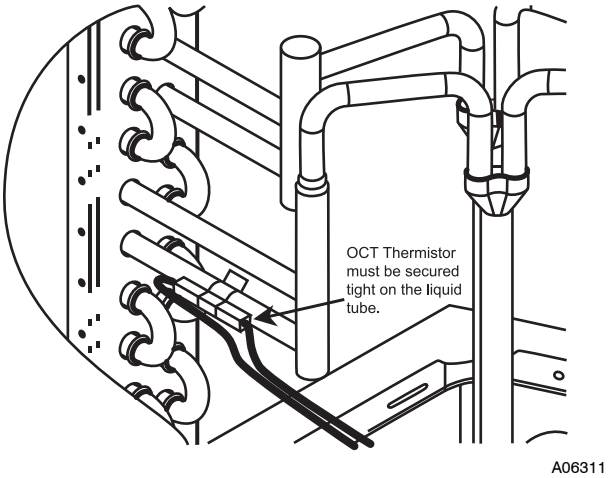

Fig. 22 - Outdoor Coil Thermistor (OCT) Attachment

FINAL CHECKS

IMPORTANT: Before leaving job, be sure to do the following:

1. Ensure that all wiring is routed away from tubing and sheet metal edges to prevent rub-through or wire pinching.
2. Ensure that all wiring and tubing is secure in unit before adding panels and covers. Securely fasten all panels and covers.
3. Leave Users Manual with owner. Explain system operation and periodic maintenance requirements outlined in manual.
4. Fill out Dealer Installation Checklist and place in customer file.

CARE AND MAINTENANCE

For continuing high performance and to minimize possible equipment failure, periodic maintenance must be performed on this equipment.

Frequency of maintenance may vary depending upon geographic areas, such as coastal applications. See Users Manual for information.

AIR CONDITIONER WITH PURON REFRIGERATION SECTION QUICK-REFERENCE GUIDE

Puron refrigerant operates at 50-70 percent higher pressures than R-22. Be sure that servicing equipment and replacement components are designed to operate with Puron. Puron refrigerant cylinders are rose colored.

- Puron refrigerant cylinders manufactured prior to March 1, 1999, have a dip tube that allows liquid to flow out of cylinder in upright position. Cylinders manufactured March 1, 1999 and later DO NOT have a dip tube and MUST be positioned upside down to allow liquid to flow.
- Recovery cylinder service pressure rating must be 400 psig. DOT 4BA400 or DOT BW400.
- Puron systems should be charged with liquid refrigerant. Use a commercial-type metering device in the manifold hose.
- Manifold sets should be minimum 700 psig high side and 180 psig low side with 550 psig low side retard.
- Use hoses with minimum 700 psig service pressure rating.
- Leak detectors should be designed to detect HFC refrigerant.
- Puron, as with other HFCs, is only compatible with POE oils.
- Vacuum pumps will not remove moisture from oil.
- Only use factory-specified liquid-line filter driers with rated working pressures no less than 600 psig.
- Do not install a suction-line filter drier in liquid line.
- POE oils absorb moisture rapidly. Do not expose oil to atmosphere.
- POE oils may cause damage to certain plastics and roofing materials.
- Wrap all filter driers and service valves with wet cloth when brazing.
- A Puron liquid-line filter drier is required on every unit.
- Do not use an R-22 TXV.
- **Never** open system to atmosphere while it is under a vacuum.
- When system must be opened for service, break vacuum with dry nitrogen and replace filter driers.
- Do not vent Puron into the atmosphere.
- Observe all **warnings, cautions,** and **bold** text.
- Do not leave Puron suction line driers in place for more than 72 hrs.

Table 7 – Troubleshooting Chart

SYMPTOM	CAUSE	REMEDY
Compressor and outdoor fan will not start	Power failure	Call power company
	Fuse blown or circuit breaker tripped	Replace fuse or reset circuit breaker
	Defective contactor, transformer, control relay, or high-pressure, loss-of-charge or low-pressure switch	Replace component
	Insufficient line voltage	Determine cause and correct
	Incorrect or faulty wiring	Check wiring diagram and rewire correctly
	UI setting too low/too high	Reset UI setting
Compressor will not start but condenser fan runs	Faulty wiring or circuit Loose connections in compressor	Check wiring and repair or replace
	Compressor motor burned out, seized, or internal overload open	Determine cause Replace compressor
	Defective run capacitor, overload, or PTC (positive temperature coefficient) thermistor	Determine cause and replace
	Low input voltage	Determine cause and correct
Compressor cycles (other than normally satisfying) cooling/heating calls	Refrigerant overcharge or undercharge	Recover refrigerant, evacuate system, and recharge to capacities shown on rating plate
	Defective compressor	Replace and determine cause
	Insufficient line voltage	Determine cause and correct
	Blocked outdoor coil	Determine cause and correct
	Defective run/start capacitor, overload or start relay	Determine cause and replace
	Faulty outdoor fan motor or capacitor	Replace
	Restriction in refrigerant system	Locate restriction and remove
Compressor operates continuously	Dirty air filter	Replace filter
	Unit undersized for load	Decrease load or increase unit size
	UI temperature set too low	Reset UI setting
	Low refrigerant charge	Locate leak, repair, and recharge
	Air in system	Recover refrigerant, evacuate system, and recharge
	Outdoor coil dirty or restricted	Clean coil or remove restriction
Excessive head pressure	Dirty air filter	Replace filter
	Dirty indoor or outdoor coil	Clean coil
	Refrigerant overcharged	Recover excess refrigerant
	Air in system	Recover refrigerant, evacuate system, and recharge
	Indoor or outdoor air restricted or air short-cycling	Determine cause and correct
Head pressure too low	Low refrigerant charge	Check for leaks, repair and recharge
	Restriction in liquid tube	Remove restriction
Excessive suction pressure	High heat load	Check for source and eliminate
	Reversing valve hung up or leaking internally	Replace valve
	Refrigerant overcharged	Recover excess refrigerant
Suction pressure too low	Dirty air filter	Replace filter
	Low refrigerant charge	Check for leaks, repair and recharge
	Metering device or low side restricted	Remove source of restriction
	Insufficient coil airflow	Check filter–replace if necessary
	Temperature too low in conditioned area	Reset UI setting
	Outdoor ambient below 55°F (13°C)	Verify low-ambient cooling enabled in UI
	Filter drier restricted	Replace
IFM does not run	Blower wheel not secured to shaft	Properly tighten blower wheel to shaft
	Insufficient voltage at motor	Determine cause and correct
	Power connectors not properly sealed	Connectors should snap easily; do not force
IFM operation is intermittent	Water dripping into motor	Verify proper drip loops in connector wires
	Connectors not firmly sealed	Gently pull wires individually to be sure they are crimped into the housing

START-UP CHECKLIST

(Remove and Store in Job Files)

I. PRELIMINARY INFORMATION

MODEL NO.:_____

SERIAL NO.:_____

DATE:_____

TECHNICIAN:_____

II. PRESTART-UP (Insert check mark in box as each item is completed)

( ) VERIFY THAT ALL PACKING MATERIALS HAVE BEEN REMOVED FROM UNIT

( ) REMOVE ALL SHIPPING HOLD DOWN BOLTS AND BRACKETS PER INSTALLATION INSTRUCTIONS

( ) CHECK ALL ELECTRICAL CONNECTIONS AND TERMINALS FOR TIGHTNESS

( ) CHECK THAT INDOOR (EVAPORATOR) AIR FILTER IS CLEAN AND IN PLACE

( ) VERIFY THAT UNIT INSTALLATION IS LEVEL

( ) CHECK FAN WHEEL, AND PROPELLER FOR LOCATION IN HOUSING/ORIFICE AND SETSCREW TIGHTNESS

III. START-UP

ELECTRICAL

SUPPLY VOLTAGE_____

COMPRESSOR AMPS_____

INDOOR (EVAPORATOR) FAN AMPS_____

TEMPERATURES

OUTDOOR (CONDENSER) AIR TEMPERATURE_____DB

RETURN-AIR TEMPERATURE_____DB_____W.C.

COOLING SUPPLY AIR_____DB_____W.C.

ELECTRIC HEAT SUPPLY AIR _____

PRESSURES

REFRIGERANT SUCTION_____PSIG, SUCTION LINE TEMP*_____

REFRIGERANT DISCHARGE_____PSIG, LIQUID TEMP†_____

( ) VERIFY REFRIGERANT CHARGE USING CHARGING CHARTS

* Measured at suction inlet to compressor

† Measured at liquid line leaving condenser.

50XL – A

Copyright 2009 Carrier Corp. • 7310 W. Morris St. • Indianapolis, IN 46231

Printed in U.S.A. Edition Date: 08/09

Catalog No:50XL–04SI

Manufacturer reserves the right to change, at any time, specifications and designs without notice and without obligations.

Replaces: 50XL–03SI