58CVA/CVX
INFINITY™ 80 VARIABLE SPEED
4–WAY MULTIPOISE GAS FURNACE
Input Capacities: 70,000 thru 155,000 Btuh
Series 160

Carrier
turn to the experts

Product Data

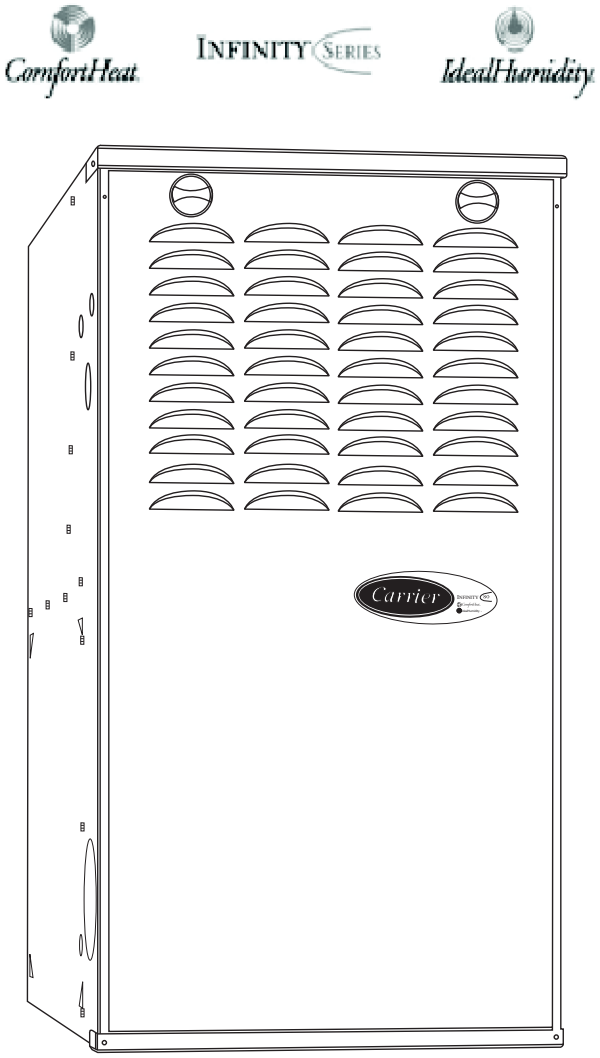

A10250

THE INFINITY™ 80 GAS FURNACE

The Infinity™ 80 Variable-Speed, 4-way Multipoise Gas Furnaces offer unmatched comfort with ComfortHeat™ and IdealHumidity™ technologies in an 80% AFUE gas furnace. You get all the benefits of a ComfortHeat technology furnace: reduced drafts, reduced sound levels, longer cycles, less temperature swings between cycles, and less temperature differences between rooms. With the variable speed blower motor, homeowners can now economically run constant fan to help eliminate temperature differences throughout the house and to get better indoor air quality. This furnace with IdealHumidity™ technology also increases comfort in the summer by wringing out extra humidity when needed. The Infinity 80 furnaces are approved for use with natural or propane gas, and the 58CVX is also approved for use in Low NOx Air Quality Management Districts.

Carrier Infinity™ System When the Infinity 80 variable-speed gas furnace is matched with the Infinity Control and an air conditioner or heat pump, you will experience the ultimate in ComfortHeat and IdealHumidity through unparalleled control of temperature, humidity, indoor air quality, and zoning. The Carrier Infinity System also provides unprecedented ease of use through on-screen, text-based service reminders and equipment malfunction alerts. For even greater comfort and convenience, match the Infinity 80 furnace with an Infinity air conditioner or heat pump. This will create a fully communicating system, requiring only 4 thermostat wires between system components, and troubleshooting can even be done from the outdoor unit without entering the home.

Optional remote access through telephone or Internet is also available when combined with a remote connectivity kit.

STANDARD FEATURES

- **Infinity System-match with the Infinity Control for Infinity System benefits**
- **ComfortHeat Technology Intelligent microprocessor control**
- **Two-stage heating with single-stage thermostat with patented Adaptive Control Technology**
- **Very low operating sound through low-stage operation and QuieTech™ system**
- **Integral part of the IdealHumidity System**
  Maximum dehumidification selection for summer time cooling
  Full IdealHumidity benefits including "Super Dehumidify"
  SmartEvap™-Humidity control when using a Thermidistat™ / Infinity control
- **Variable-speed ECM blower motor**
  Increased SEER ratings for AC and HP systems as compared to the Air Conditioning Heating and Refrigeration Institute's standard coil-only rating when paired with selected Carrier evaporator coils.
  Perfectly matches CFM to cooling system at all static points
- **Comfort Fan™-Up to 12 cooling airflow selections from thermostat with a wide range of capability**
- **Microprocessor based control center**
  Enhanced diagnostics with LED and reflective sight glass
  Stores fault codes during power outages
  Adjustable heating air temperature rise
  Adjustable cooling airflow
  Dehumidification selection for summer-time cooling
- **4-way Multipoise furnace, 13 vent applications**
- **Compact design - only 33-1/3 in. (847 mm) tall**

STANDARD FEATURES (CONTINUED)

- **Power Heat™ Igniter**
- **Draft Safeguard switch to ensure proper furnace venting**
- **Insulated blower compartment**
- **Inner door for tighter sealing**
- **Certified to leak 2 percent or less of its nominal air conditioning CFM delivered when pressurized to 1-In. Water Gauge with all present air inlets, air outlets, and condensate drain port(s) sealed.**
- **HYBRID HEAT® Dual Fuel System compatible**
- **All models are chimney friendly when used with accessory vent kit**
- **Residential installations eligible for consumer financing through the Retail Credit Program**

MODEL NUMBER NOMENCLATURE

58CVA — **070** — **100** — **12**

58CVA Variable Speed 4-Way Multipoise
58CVX Low NOx Version

Input Capacity

070 – 66,000 Btuh	135 – 132,000 Btuh
090 – 88,000 Btuh	155 – 154,000 Btuh
110 – 110,000 Btuh	

Series Number

100
110
120
130
140
150
160

Nominal Cooling Size
(Airflow at .5 ESP.)
(400 CFM per 12,000 Btuh)

12	1200 CFM
16	1600 CFM
20	2000 CFM
22	2200 CFM

FURNACE COMPONENTS

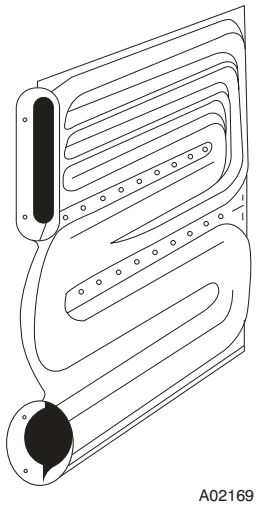

A02169

HEAT EXCHANGER

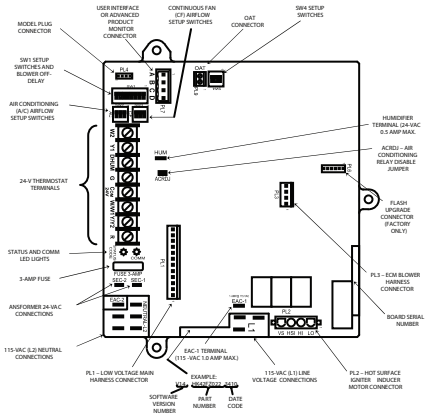

A10286

CONTROL BOARD

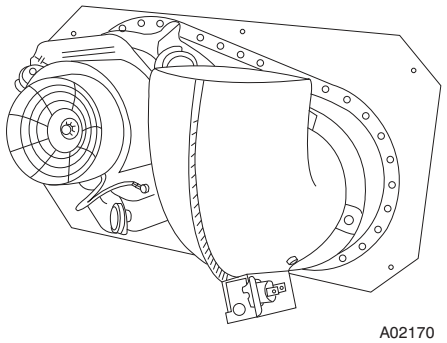

A02170

INDUCER BLOWER

FURNACE COMPONENTS

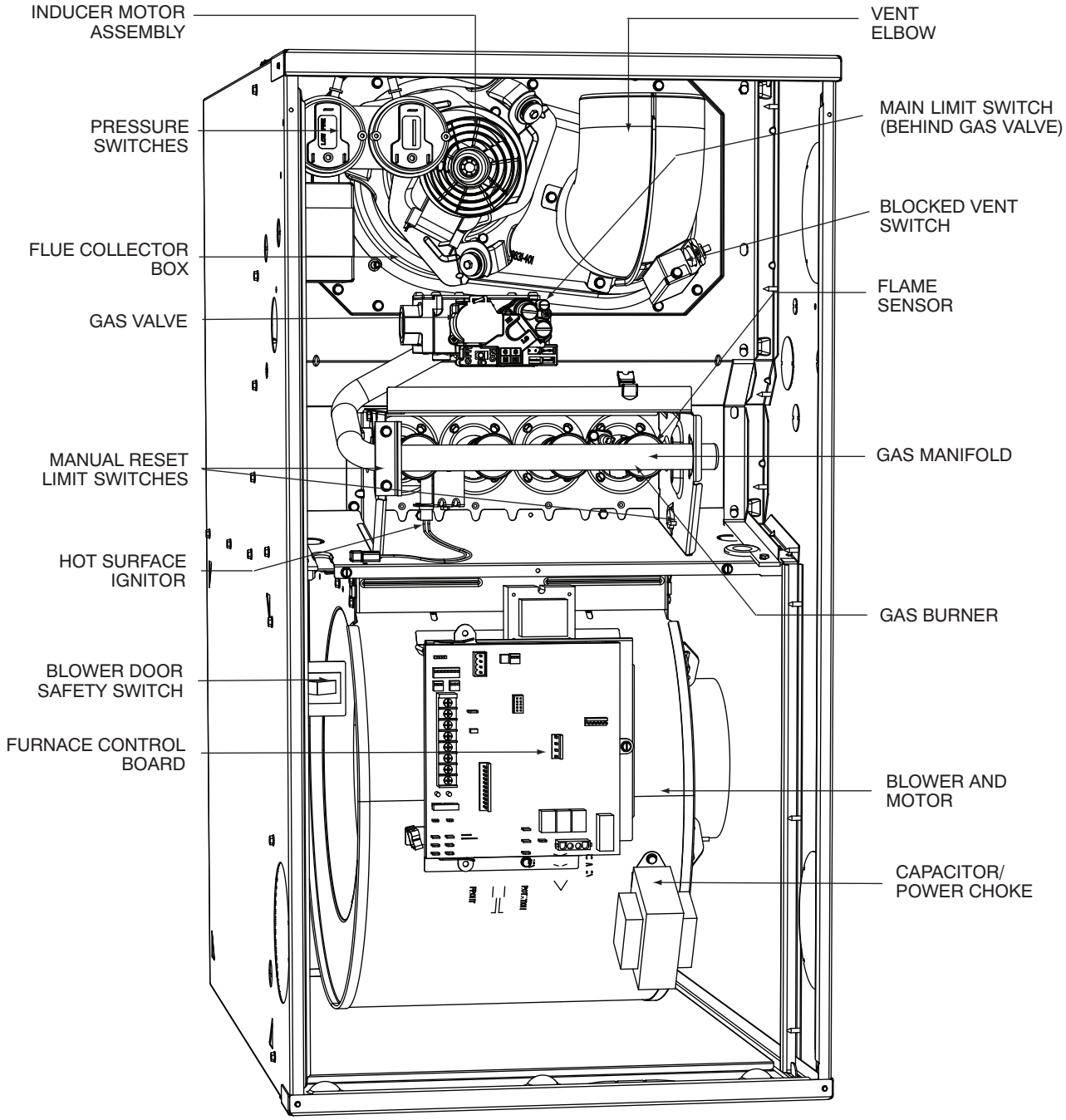

A10312

NOTE: The 58CVA/CVX furnaces are factory shipped for use with natural gas. These furnaces can be field-converted for propane gas with a factory-authorized and listed accessory conversion kit.

CARRIER ACCESSORIES

A03149

CONTROLS: THERMOSTATS AND ZONING

Available in programmable and non-programmable models, Carrier thermostats maintain a constant, comfortable temperature level in the home.

For the ultimate in home comfort, Carrier's 2, 4, and 8-zone systems allow temperature control of individual "zones" of the home. This is accomplished through a series of electronic dampers and remote room sensors. Infinity ™ Control shown.

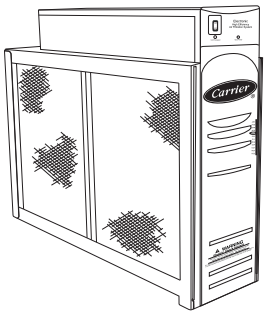

C04008

MECHANICAL OR ELECTRONIC AIR CLEANER

Cleans the air of smoke, dirt, and many pollens commonly found. Saves decorating and cleaning expenses by keeping carpets, furniture, and drapes cleaner.

Electronic air cleaner is shown.

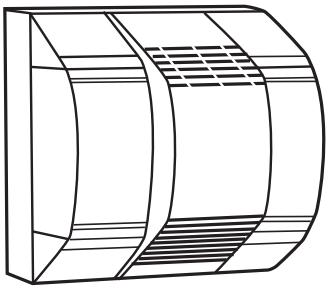

A01484

MODEL HUMCCLFP HUMIDIFIER

By adding moisture to winter-dry air, a Carrier humidifier can often improve comfort and keep furniture, rugs, and draperies in better condition. Moisturizing household air also helps to retain normal body heat and provides comfort at lower temperatures.

CARRIER ACCESSORIES

DESCRIPTION	
ELECTRONIC AIR CLEANER (EAC)	Model EACB
MECHANICAL AIR CLEANER	Models EZXCAB, FILCAB
HUMIDIFIER	Model HUM
HEAT RECOVERY VENTILATOR	Model HRV
ENERGY RECOVERY VENTILATOR	Model ERV
UV LIGHTS	Model UVL
THERMOSTAT – NON-PROGRAMMABLE	For use with 1-speed Air Conditioner – deg. F/C, Auto Changeover – TP–NAC, TC–NAC
	For use with 1-speed Heat Pump – deg. F/C, Auto Changeover – TP–NHP, TC–NHP*
	For use with 2-speed Air Conditioner – deg. F/C, Auto Changeover – TP–NRH*
	For use with multi-use / stage configurations – deg. F/C, Auto Changeover/Temperature and Humidity Control – TP–PRH†
THERMOSTAT – PROGRAMMABLE	For use with 1-speed Air Conditioner – deg. F/C, Auto Changeover, 7-Day Programmable – TP–PAC
	For use with 1-speed Heat Pump – deg. F/C, Auto Changeover, 7-Day Programmable – TP–PHP*
	For use with 2-speed Air Conditioner – deg. F/C, Auto Changeover, 7-Day Programmable – TP–PRH*
	For use with 1-speed Air Conditioner – deg. F/C, 5–2 Day Programmable – TP–PAC
	For use with multi-stage applications – deg. F/C, Auto Changeover, 7-Day Programmable – TC–PHP‡
	For multi-use / stage configurations – deg. F/C, Auto Changeover, 7-Day Programmable/Temperature and Humidity Control –TP–PRH†
ZONING CONTROL	Comfort™ Series 3-Zone Kit – ZONECC3ZAC01, ZONECC3ZHP01
	2 Performance™ Series ComfortZone™ II Zoning/Temperature and Humidity Control – ZONECC2KIT01–B
	4 Performance™ Series ComfortZone™ II Zoning/Temperature and Humidity Control – ZONECC4KIT01–B
	8 Performance™ Series ComfortZone™ II Zoning/Temperature and Humidity Control – ZONECC8KIT01–B
	Infinity™ Control Deluxe 7-Day Programmable (Wall-mounted system control.) – SYSTXCCUID01 Infinity™ Control Deluxe Zoning 7-Day Programmable (Wall-mounted control for a multi-zone system.) – SYSTXCCUIZ01 Infinity™ 4-Zone Damper Control Module (Wall-mounted for a 4-zone system.) – SYSTXCC4ZC02 Infinity™ Smart Sensor (Optional wall control used to monitor temperature and/or fan control in an individual zone.) – SYSTXCCSMS01 Infinity™ Remote Room Sensor (Monitors temperature in an individual zone.) – SYSTXCCRRS01 Infinity™ System Access Module (Hardware for wireless access and control via phone or internet.) – SYSTXCCSAM01 Infinity™ Network Interface Module (Connects Heat Recovery and Energy Recovery Ventilators or older two-speed outdoor models to system.) – SYSTCCNIM01†† Decorative Back Plate for Infinity Control (Decorative wall plate.) SYSTXXXBPU01

* Model HP and 2S thermostat must be field converted to air conditioner operation.
† Thermidistat Control can be configured for multiple use and staging, it must be configured for each specific application.
‡ Dual Fuel thermostat is used with furnace and heat pump application.
** When applied with Carrier's IdealHumidity™ series 58CVA/CVX and FE Indoor Models
†† Must be installed in Dual–Fuel Infinity system applications

CARRIER ACCESSORIES

DESCRIPTION	PART NO.	070–12	090–16	110–20	135–22	155–22
Media Filter Cabinet	FILCABXL0016	X	X			
	FILCABXL0020			X		
	FILCABXL0024				X	X
Cartridge Media Filter	FILCCCAR0016	X	X			
	FILCCCAR0020			X		
	FILCCCAR0024				X	X
EZ Flex Media Filter with End Caps	EXPXXUNV0016	X	X			
	EXPXXUNV0020			X		
	EXPXXUNV0024				X	X
Replacement EZ Flex Filter Media	EXPXXFIL0016	X	X			
	EXPXXFIL0020			X		
	EXPXXFIL0024				X	X
External Bottom Return Filter Rack	KBBFR0401B14	X				
	KGBFR0501B17		X			
	KGBFR0601B21			X		
	KGBFR0701B24				X	X
External Side Return Filter Rack	KGAFR0801SRE	X	X	X	X	X
Unframed Filter 3/4-in. (19 mm)	KGAWF1306UFR†	X	X			
	KGAWF1406UFR			X		
	KGAWF1506UFR				X	X
Flue Extension	KGAFE0112UPH	X	X	X	X	X
Combustible Floor Base	KGASB0201ALL	X	X	X	X	X
Downflow Vent Guard	KGBVG0101DFG	X	X	X	X	X
Vent Extension Kit	KGAVE0101DNH	X	X	X	X	X
Chimney Adapter Kit	KGACA02014FC	X	X	X		
Chimney Adapter Kit	KGACA02015FC				X	X
Natural-to-Propane Conversion Kit*	KGANP4601ALL	X	X	X	X	X
Propane-to-Natural Conversion Kit	KGAPN3901ALL	X	X	X	X	X
Label Kit	KGALB0101KIT	X	X	X	X	X
Air Leakage Kit (Qty 10)	KGBAC0110DGK	X	X	X	X	X
ECM Motor Simulator	KGASD0301FMS	X	X	X	X	X
Advanced Product Monitor	KGAFP0301APM	X	X	X	X	X
Gas Orifice	LH32DB207	See Installation Instructions for model, altitude, and heat value usages.				
	LH32DB202					
	LH32DB200					
	LH32DB205					
	LH32DB208					
	LH32DB078					
	LH32DB076					
	LH32DB203					
	LH32DB201					
	LH32DB206					
	LH32DB209					
	LH32DB210					

* Factory-authorized and field installed. Fuel conversion kits are CSA (formerly AGA/CGA) recognized.
† Suitable for Side Return Filter Rack

X = Accessory
S= Standard

PHYSICAL DATA

UNIT SIZE			070-12	090-16	110-20	135-22	155-22
OUTPUT CAPACITY BTUH* (Nonweatherized ICS) †	All 58CVA; 58CVX Upflow	High	54,000	71,000	89,000	107,000	125,000
		Low	35,000	47,000	59,000	70,000	82,000
	58CVX Downflow/Horizontal	High	51,000	68,000	85,000	102,000	119,000
		Low	35,000	47,000	59,000	70,000	82,000
INPUT BTUH*	58CVX Upflow; all 58CVA	High	66,000	88,000	110,000	132,000	154,000
		Low	43,500	58,000	72,500	87,000	101,500
	58CVX Downflow/Horizontal	HIgh	63,000	84,000	105,000	126,000	147,000
		Low	43,500	58,000	72,500	87,000	101,500
SHIPPING WEIGHT – LB (KG)			115 (52)	130 (59)	155 (70)	166 (75)	175 (79)
CERTIFIED TEMP RISE RANGE – °F (°C)		High	30–60 (17–33)	40–70 (22–39)	40–70 (22–39)	40–70 (22–39)	45–75 (25–42)
		Low	30–60 (17–33)	30–60 (17–33)	25–55 (14–30)	25–55 (14–30)	30–60 (17–33)
CERTIFIED EXT STATIC PRESSURE IN. WC	Heating	High	0.12	0.15	0.20	0.20	0.20
	Cooling	Low	0.5	0.5	0.5	0.5	0.5
AIRFLOW CFM‡	Heating–High/Low		1180/735	1210/985	1475/1320	1915/1700	1970/1715
	Cooling		1225	1400	2095	2100	2095
AFUE%*	Nonweatherized ICS		80.0	80.0	80.0	80.0	80.0
LIMIT CONTROL			SPST				
HEATING BLOWER CONTROL			Solid-State Time Operation				
BURNERS (Monoport)			2 2	3	3	3	4 4
GAS CONNECTION SIZE			1/2–in. NPT				
GAS VALVE (Redundant) Manufacturer			White-Rodgers				
Minimum Inlet Pressure (In. W.C.)			4.5 (Natural Gas)				
Maximum Inlet Pressure (In. W.C.)			13.6 (Natural Gas)				
IGNITION DEVICE			Hot Surface				

* Gas input ratings are certified for elevations to 2000 ft. (610 M). In USA, for elevations above 2000 ft. (610 M), reduce ratings 4 percent for each 1000 ft. (305 M) above sea level. Refer to National Fuel Gas Code NFPA 54/ANSI Z223.1–2009 Table F.4 or furnace Installation Instructions.

† Capacity in accordance with U.S. Government DOE test procedures.

‡ Airflow shown is for bottom only return–air supply in comfort mode (as shipped). For air delivery above 1800 CFM, see Air Delivery Table for other options. A filter is required for each return-air supply.

ICS — Isolated Combustion System

BLOWER PERFORMANCE DATA

UNIT SIZE	070-12	090-16	110-20	135-22	155-22
DIRECT–DRIVE MOTOR Hp (ECM)	1/2	1/2	1	1	1
MOTOR FULL LOAD AMPS	7.7	7.7	12.8	12.8	12.8
RPM (Nominal)	300-1300	300-1300	300-1300	300-1300	300-1300
BLOWER WHEEL DIAMETER X WIDTHS – IN. (MM)	10 x 6 (254 x 152)	10 x 8 (254 x 203)	11 x 10 (279 x 254)	11 x 11 (279 x 279)	11 x 11 (279 x 279)

ECM–Electronically Commutated Motor, Variable Speed

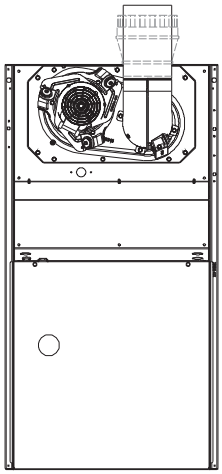

SEE NOTES: 1,2,4,7,8,9
UPFLOW

A02058

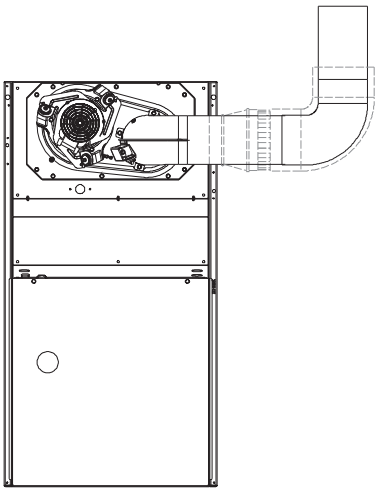

SEE NOTES: 1,2,3,4,7,8,9
UPFLOW

A02059

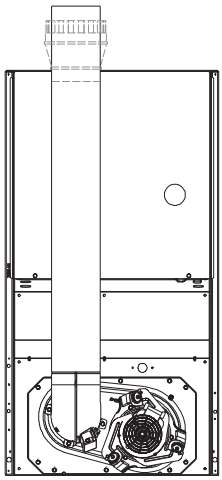

SEE NOTES: 1,2,4,5,7,8,9
DOWNFLOW

A02061

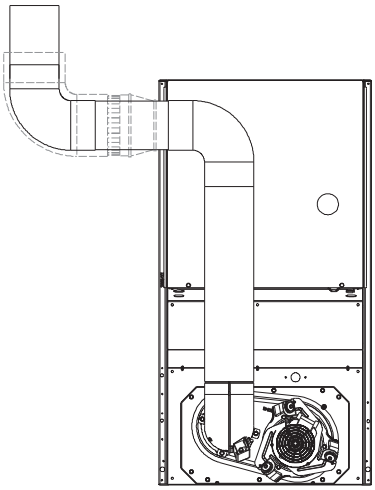

SEE NOTES:1,2,3,4,5,7,8,9
DOWNFLOW

A02060

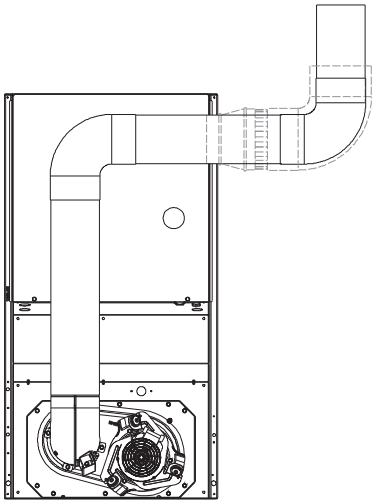

SEE NOTES: 1,2,3,4,5,7,8,9
DOWNFLOW

A02063

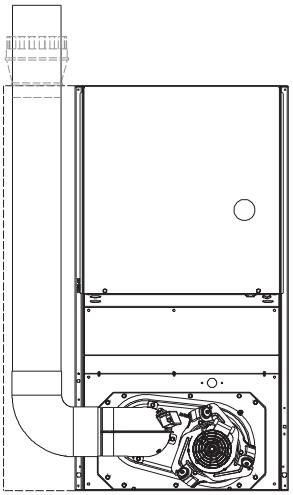

SEE NOTES: 1,2,4,5,6,7,8,9
DOWNFLOW

A02062

Venting Notes

1. For common vent, vent connector sizing and vent material: United States, latest edition of the National Fuel Gas Code (NFGC), ANSI Z223.1/NFPA 54.
2. Immediately increase to 5-in. (127 mm) vent connector outside furnace casing when 5-in. (127 mm) vent connector required, refer to Note 1.
3. Side outlet vent for upflow and downflow installations must use Type B vent immediately after exiting the furnace, except when Downflow Vent Guard is used in downflow position.
4. Type B vent where required, refer to Note 1.
5. 4 – in. (102 mm) single wall vent must be used inside furnace casing and the Downflow Vent Guard Kit.
6. Accessory Downflow Vent Guard Kit, required in downflow installations with bottom vent configuration.
7. Chimney Adapter Kit required for exterior masonry chimney applications. Refer to Chimney Adapter Kits for sizing and complete application details.
8. Secure vent connector to furnace elbow with (2) corrosion-resistant sheet metal screws, space approximately 180° apart.
9. Secure all other single wall vent connector joints with (3) corrosion-resistant screws spaced approximately 120° apart. Secure Type B vent connectors per vent connector manufacturer's recommendations.

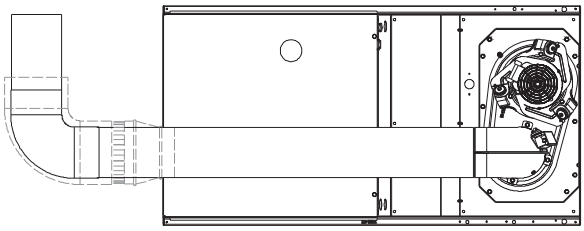

SEE NOTES: 1,2,4,5,7,8,9
HORIZONTAL RIGHT

A02068

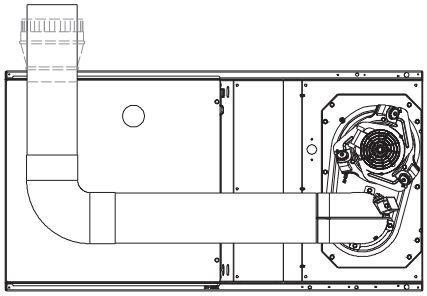

SEE NOTES: 1,2,4,5,7,8,9
HORIZONTAL RIGHT

A02070

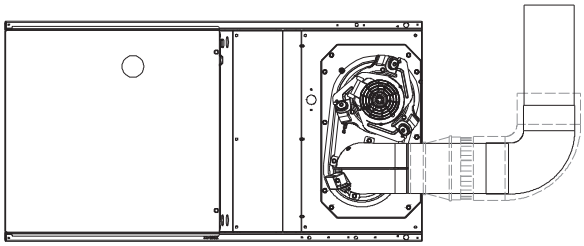

SEE NOTES: 1,2,4,7,8,9
HORIZONTAL RIGHT

A02069

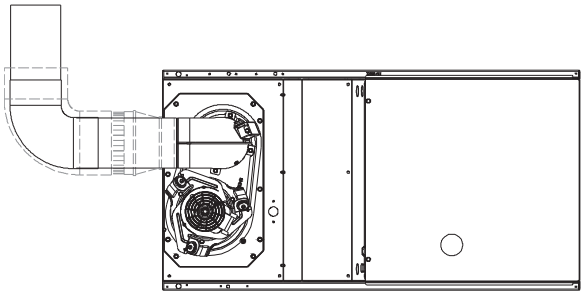

SEE NOTES: 1,2,4,7,8,9
HORIZONTAL LEFT

A02064

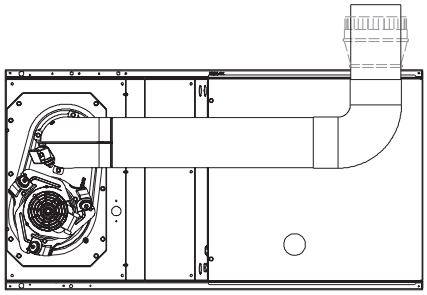

SEE NOTES: 1,2,4,5,7,8,9
HORIZONTAL LEFT

A02065

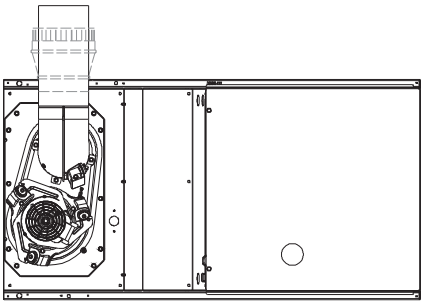

SEE NOTES: 1,2,4,5,7,8,9
HORIZONTAL LEFT

A02066

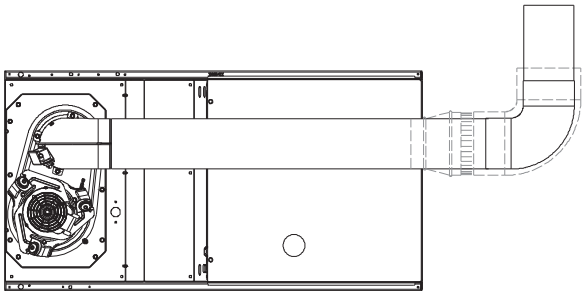

SEE NOTES: 1,2,4,5,7,8,9
HORIZONTAL LEFT

A02067

AIR DELIVERY - CFM (With Filter)*

Unit Size	Operating Mode	CFM Airflow Setting	External Static Pressure Range* (In. W.C.)	External Static Pressure (ESP) (IN WC)									
				0.1	0.2	0.3	0.4	0.5	0.6	0.7	0.8	0.9	1
070−12				AIRFLOW (CFM)									
††	Low Heat	735 (615)†	0−0.50	735	735	735	735	725					
	High Heat	1180 (1060)†	0−1.0	1160	1165	1175	1180	1180	1180	1180	1180	1180	1175
††	1−1/2−Ton Cooling	525	0−0.50‡	515	500	500	490	485					
††	2−Ton A/C Cooling	700	0−0.50‡	690	680	675	680	675					
	2−1/2−Ton A/C Cooling	875	0−1.0‡	875	875	875	870	865	855	850	835	825	820
	3−Ton A/C Cooling	1050	0−1.0‡	1050	1050	1050	1050	1050	1050	1045	1035	1020	1000
	3−1/2−Ton A/C Cooling	1225	0−1.0	1220	1225	1225	1225	1225	1220	1205	1190	1185	1170
	Maximum	1400	0−1.0	1395	1400	1400	1400	1395	1385	1370	1340	1300	1245
090−16													
	Low Heat	985 (825)†	0−1.0	950	970	985	985	985	985	985	985	985	980
	High Heat	1210 (1090)†	0−1.0	1190	1205	1210	1210	1210	1210	1210	1210	1210	1200
††	1−1/2−Ton A/C Cooling	525	0−0.50‡	525	520	525	495	475					
††	2−Ton A/C Cooling	700	0−0.50‡	680	680	680	675	670					
	2−1/2−Ton A/C Cooling	875	0−1.0‡	815	845	845	855	850	850	845	835	820	805
	3−Ton A/C Cooling	1050	0−1.0‡	1005	1005	1015	1035	1040	1040	1035	1030	1025	1010
	3−1/2−Ton A/C Cooling	1225	0−1.0	1190	1200	1200	1205	1205	1215	1205	1200	1185	1170
	4−Ton A/C Cooling	1400	0−1.0	1350	1370	1390	1390	1400	1390	1380	1380	1360	1340
	Maximum	1600	0−1.0	1595	1600	1600	1600	1595	1555	1505	1465	1430	1390
110−20***													
	Low Heat	1320 (1110)†	0−1.0	1275	1295	1315	1320	1320	1320	1320	1320	1320	1315
	High Heat	1475 (1330)†	0−1.0	1460	1465	1475	1475	1475	1475	1475	1475	1465	1465
††	2−Ton A/C Cooling	700	0−0.50‡	700	700	700	700	700					
††	2−1/2−Ton A/C Cooling	875	0−0.50‡	875	875	875	875	875					
††	3−Ton A/C Cooling	1050	0−0.50‡	1050	1050	1050	1050	1050					
	3−1/2−Ton A/C Cooling	1225	0−1.0‡	1225	1225	1225	1225	1225	1225	1225	1225	1225	1225
	4−Ton A/C Cooling	1400	0−1.0‡	1400	1400	1400	1400	1400	1400	1400	1400	1400	1400
	5−Ton A/C Cooling	1750	0−1.0‡	1750	1750	1750	1750	1750	1750	1750	1750	1740	1725
	6−Ton A/C Cooling	2100	0−1.0	2100	2100	2100	2100	2090	2075	2055	2040	2005	1970
	Maximum	2200	0−1.0	2200	2190	2190	2180	2155	2145	2125	2100	2080	2020
135−22													
	Low Heat	1700 (1430)†	0−1.0	1700	1700	1700	1700	1700	1695	1700	1695	1685	1670
	High Heat	1915 (1725)†	0−1.0	1900	1905	1915	1915	1915	1915	1915	1915	1915	1915
††	2−Ton A/C Cooling	700	0−0.50‡	700	700	700	700	665					
††	2−1/2−Ton A/C Cooling	875	0−0.50‡	870	870	865	865	865					
††	3−Ton A/C Cooling	1050	0−0.50‡	1010	1030	1050	1050	1050					
	3−1/2−Ton A/C Cooling	1225	0−1.0‡	1155	1180	1200	1210	1220	1225	1225	1225	1225	1225
	4−Ton A/C Cooling	1400	0−1.0‡	1395	1400	1400	1400	1400	1400	1400	1390	1375	1355
	5−Ton A/C Cooling	1750	0−1.0‡	1740	1750	1750	1750	1735	1740	1735	1730	1715	1700
	6−Ton A/C Cooling	2100	0−1.0	2075	2085	2090	2100	2100	2100	2090	2080	2055	2025
	Maximum	2200	0−1.0	2180	2195	2200	2200	2200	2200	2185	2165	2140	2095
155−22													
	Low Heat	1715 (1440)†	0−1.0	1715	1715	1715	1715	1715	1705	1710	1705	1705	1695
	High Heat	1970 (1775)†	0−1.0	1955	1965	1965	1970	1970	1970	1970	1970	1970	1960
††	2−Ton A/C Cooling	700	0−0.50‡	700	700	700	700	680					
††	2−1/2−Ton A/C Cooling	875	0−0.50‡	865	875	875	865	865					
††	3−Ton A/C Cooling	1050	0−0.50‡	1015	1020	1035	1045	1050					
	3−1/2−Ton A/C Cooling	1225	0−1.0‡	1160	1185	1215	1225	1225	1225	1225	1225	1225	1225
	4−Ton A/C Cooling	1400	0−1.0‡	1385	1400	1400	1400	1400	1400	1395	1395	1380	1360
	5−Ton A/C Cooling	1750	0−1.0‡	1745	1750	1750	1750	1745	1740	1745	1745	1740	1735
	6−Ton A/C Cooling	2100	0−1.0	2055	2070	2080	2085	2095	2100	2100	2100	2090	2065
	Maximum	2200	0−1.0	2175	2190	2200	2200	2200	2200	2200	2200	2180	2160

*Actual external static pressure (ESP) can be determined by using the fan laws (CFM 2 proportional to ESP); such as, a system with 1180 CFM at 0.5 ESP would operate at cooling airflow of 1050 CFM at 0.4 ESP and low−heating airflow of 735 CFM at 0.19 ESP.

†Comfort airflow values are shown in parenthesis. Comfort airflow is selected when the low−heat rise adjustment switch (SW1−3) is OFF and the comfort/efficiency switch (SW1−4) is ON.

‡Ductwork must be sized for high−heating CFM within the operational range of ESP.

††Operation within the blank areas of the chart is not recommended because high−heat operation will be above 1.0 ESP.

***All airflow on 110 size furnace are 5% less on side return only installations.

DIMENSIONS

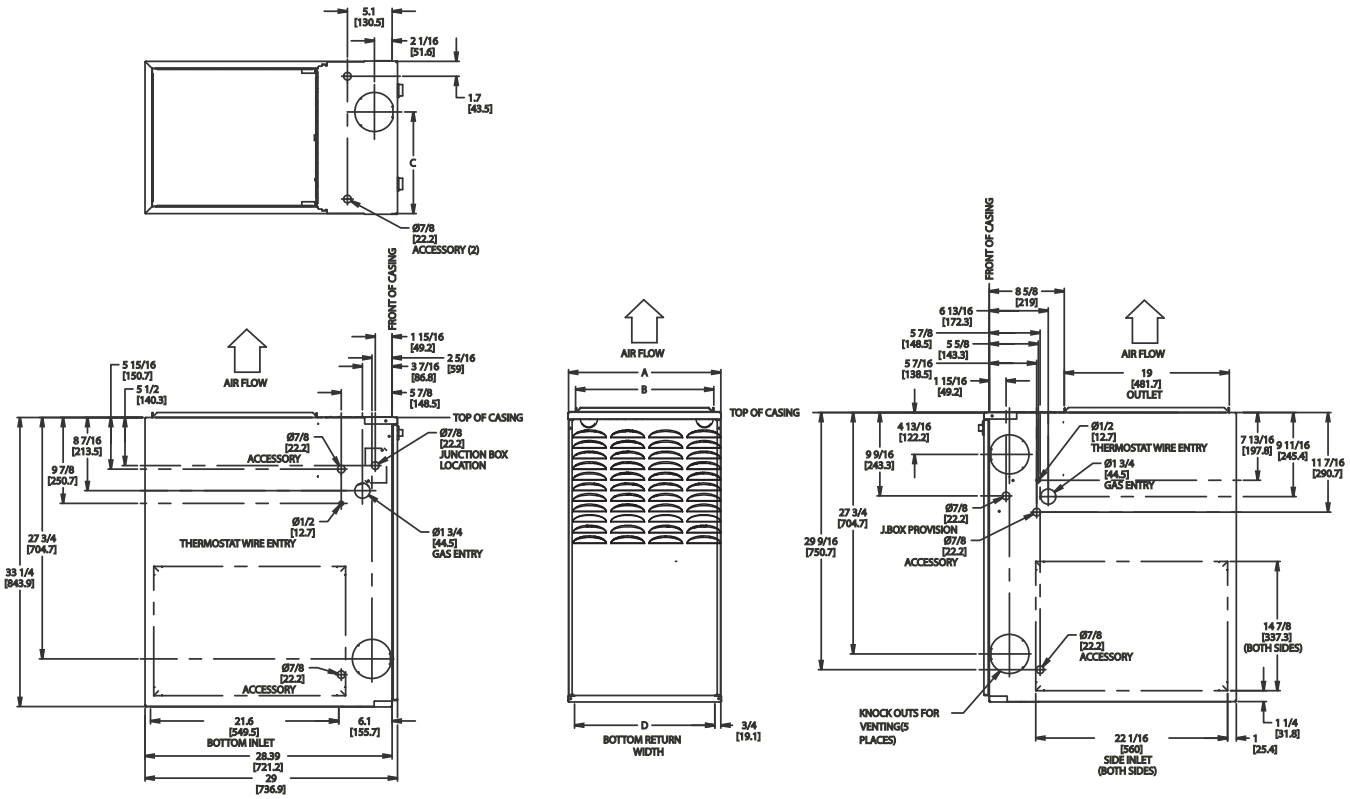

NOTES:
1. Two additional 7/8–in. (22 mm) diameter holes are located in the top plate.
2. Minimum return–air openings at furnace, based on metal duct. If flex duct is used, see flex duct manufacturer's recommendations for equivalent diameters.
   a. For 800 CFM–16–in. (406 mm) round or 14 1/2 x 12–in. (368 x 305 mm) rectangle.
   b. For 1200 CFM–20–in. (508 mm) round or 14 1/2 x 19 1/2–in. (368 x 495 mm) rectangle.
   c. For 1600 CFM–22–in. (559 mm) round or 14 1/2 x 22 1/16–in. (368 x 560mm) rectangle.
   d. For airflow requirements above 1800 CFM, see Air Delivery table in Product Data literature for specific use of single side inlets. The use of both side inlets, a combination of 1 side and the bottom, or the bottom only will ensure adequate return air openings for airflow requirements above 1800 CFM.

FURNACE SIZE	A CABINET WIDTH IN. (mm)	B OUTLET WIDTH IN. (mm)	C TOP & BOTTOM FLUE COLLAR IN. (mm)	D BOTTOM INLET WIDTH IN. (mm)	VENT CONNECTION SIZE IN. (mm)	SHIPPING WT. LB (KG)	ACCESSORY FILTER MEDIA CABINET SIZE IN. (mm)
070–12	14–3/16 (360)	12–9/16 (319)	9–5/16 (237)	12–11/16 (322)	4 (102)	115 (52)	16 (406)
090–16	17–1/2 (445)	15–7/8 (403)	11–9/16 (294)	16–1/8 (410)	4 (102)	130 (59)	16 (406)
110–20	21 (533)	19–3/8 (492)	13–5/16 (338)	19–1/2 (495)	4 (102)	155 (70)	20 (508)
135–22	24–1/2 (622)	22–7/8 (581)	15–1/16 (383)	23 (584)	4 (102)*	166 (75)	24 (610)
155–22	24–1/2 (622)	22–7/8 (581)	15–1/16 (383)	23 (584)	4 (102)*	175 (79)	24 (610)

*135 and 155 size furnaces require a 5 or 6–in. (127 or 152 mm) vent. Use a vent adapter between furnace and vent stack. See Installation Instructions for complete installation requirements.

58CVA/CVX

⚠ WARNING

FIRE, EXPLOSION, ASPHYXIATION HAZARD

Improper adjustment, alteration, service, maintenance, or installation can cause serious injury or death.

Read and follow instructions and precautions in User's Information Manual provided with this furnace. Installation and service must be performed by a qualified service agency or the gas supplier.

⚠ CAUTION

Check entire gas assembly for leaks after lighting this appliance.

INSTALLATION

1. This furnace must be installed in accordance with the manufacturer's instructions and local codes. In the absence of local codes, follow the National Fuel Gas Code ANSI Z223.1 / NFPA54 or CSA B-149. 1 Gas Installation Code.
2. This furnace must be installed so there are provisions for combustion and ventilation air. See manufacturer's installation information provided with this appliance.

OPERATION

This furnace is equipped with manual reset limit switch(es) in burner compartment to protect against overheat conditions that can result from inadequate combustion air supply or blocked vent conditions.

1. Do not bypass limit switches.
2. If a limit opens, call a quallified serviceman to correct the condition and reset limit switch.

INSTALLATION

MINIMUM INCHES CLEARANCE TO COMBUSTIBLE CONSTRUCTION

This forced air furnace is equipped for use with natural gas at altitudes 0 - 10,000 ft (0 - 3,050m).

An accessory kit, supplied by the manufacturer, shall be used to convert to propane gas use or may be required for some natural gas applications.

This furnace is for indoor installation in a building constructed on site.

This furnace may be installed on combustible flooring in alcove or closet at minimum clearance as indicated by the diagram from combustible material.

This furnace may be used with a Type B-1 Vent and may be vented in common with other gas fired appliances.

This furnace is approved for UPFLOW, DOWNFLOW, and HORIZONTAL installations.

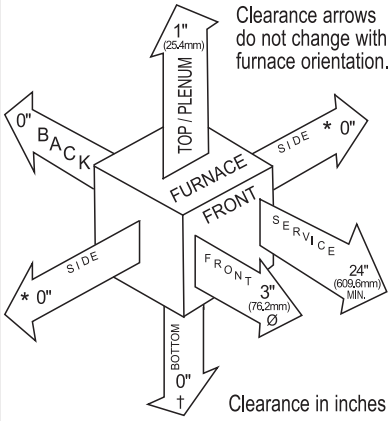

Vent Clearance to combustibles:
For Single Wall vents 6 inches (6 po).
For Type B-1 vent type 1 inch (1 po).

MINIMUM INCHES CLEARANCE TO COMBUSTIBLE CONSTRUCTION

DOWNFLOW POSITIONS:

† Installation on non-combustible floors only.

For Installation on combustible flooring only when installed on special base, Part No. KGASB0201ALL or NAHA01101SB, Coil Assembly, Part No. CAR, CAP, CNPV, CNRV, END4X, ENW4X, WENC, WTNC, WENW OR WTNW.

Ø 18 inches front clearance required for alcove.

* Indicates supply or return sides when furnace is in the horizontal position. Line contact only permissible between lines formed by intersections of the Top and two Sides of the furnace jacket, and building joists, studs or framing.

336996-101 REV. C

A10269

Certified System ™
ISO 9001
QMI-SAI Global

AHRI CERTIFIED™ C
www.ahridirectory.org

Use of the AHRI Certified ™ Mark indicates a manufacturer's participation in the program. For verification of certification for individual products, go to www.ahridirectory.org.

DESIGN CERTIFIED ®

Always Ask For
FACTORY AUTHORIZED PARTS

TYPICAL WIRING SCHEMATIC

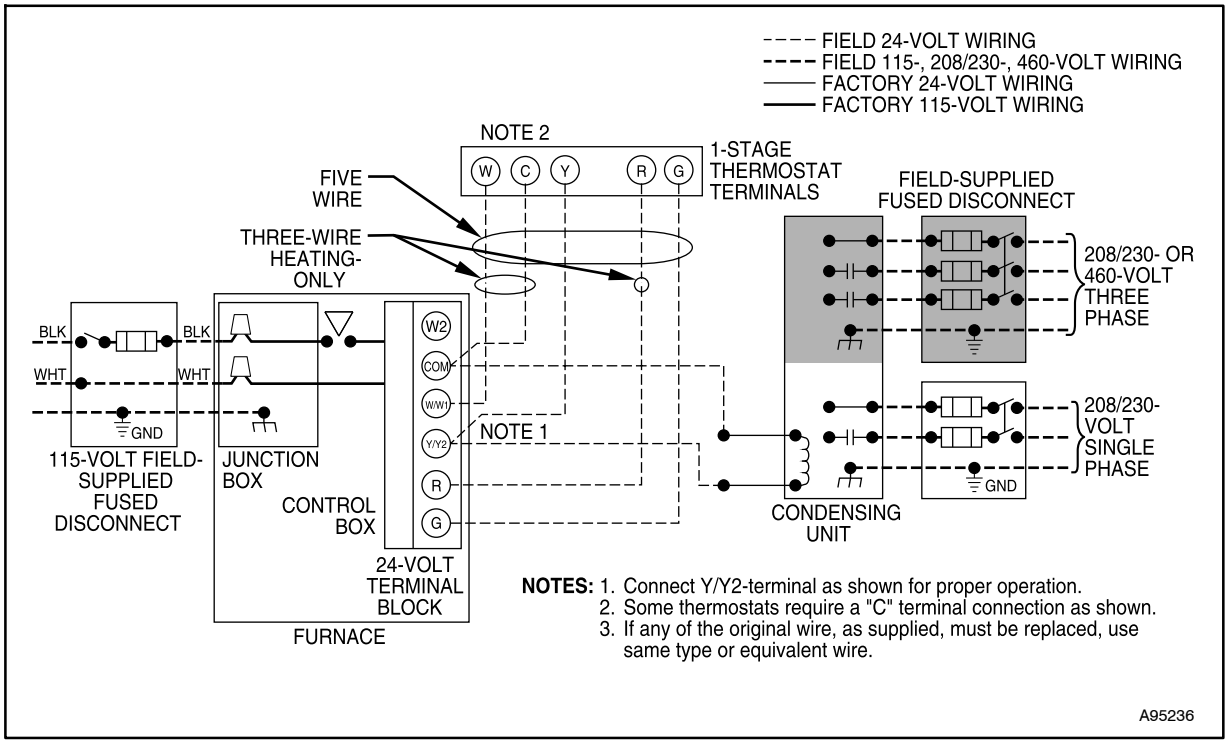

ELECTRICAL DATA

UNIT SIZE	VOLTS HERTZ PHASE	OPERATING VOLTAGE RANGE		MAXIMUM UNIT AMPS	MAXIMUM WIRE LENGTH FT (M)‡	MAXIMUM FUSE OR CKT BKR AMPS†	MINIMUM WIRE GAGE
		Maximum*	Minimum*				
070-12	115-60-1	127	104	9.0	30 (9.1)	15	14
090-16	115-60-1	127	104	9.6	29 (8.8)	15	14
110-20	115-60-1	127	104	15.1	29 (8.8)	20	12
135-22	115-60-1	127	104	14.9	30 (9.1)	20	12
155-22	115-60-1	127	104	15.0	29 (8.8)	20	12

* Permissible limits of the voltage range at which unit operates satisfactorily.
† Time–delay type is recommended.
‡ Length shown is as measured one way along wire path between unit and service panel for maximum 2 percent voltage drop.

TYPICAL INSTALLATION

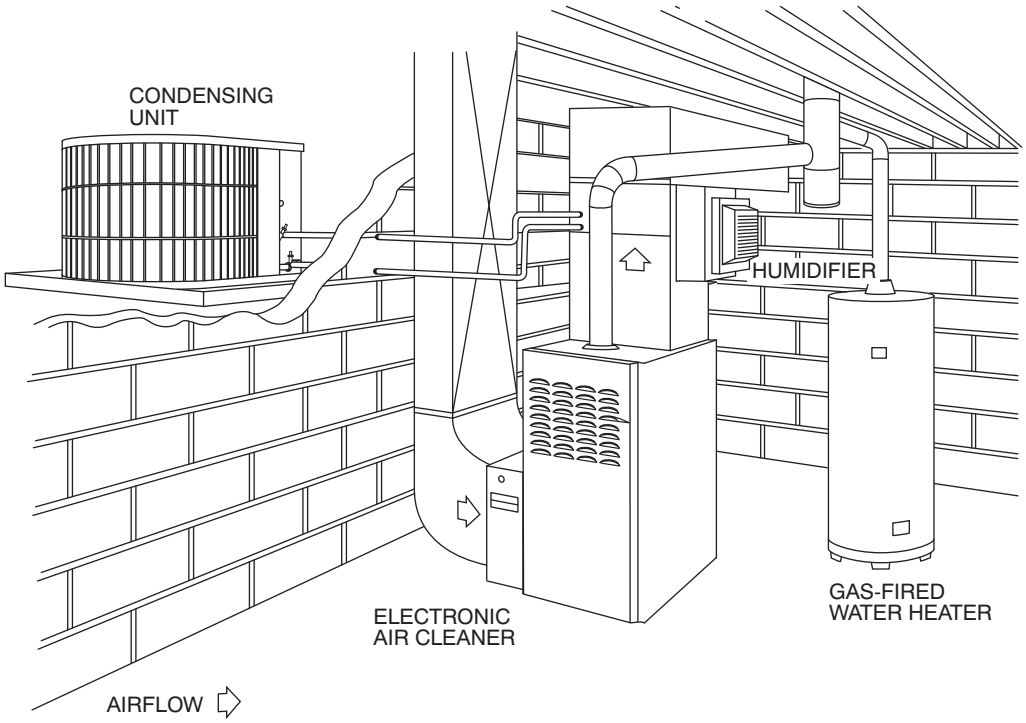

A10211

58CVA/CVX

GUIDE SPECIFICATIONS

Gas Furnace
58CVA/CVX
General

SYSTEM DESCRIPTION

Furnish a _____ Variable speed gas-fired furnace for use with natural gas or propane (factory authorized conversion kit required for propane); furnish cold air return plenum.

QUALITY ASSURANCE

Unit will be designed, tested and constructed to the current ANSI Z 21.47/CSA 2.3 design standard for gas-fired central furnaces. Unit will be 3rd party certified by CSA to the current ANSI Z 21.47/CSA 2.3 design standard for gas-fired central furnaces.

Unit will carry the CSA Blue Star® label.

Unit efficiency testing will be performed per the current DOE test procedure as listed in the Federal Register.

Unit will be certified for capacity and efficiency and listed in the latest AHRI Consumer's Directory of Certified Efficiency Ratings.

Unit shall carry the current Federal Trade Commission Energy Guide efficiency label.

DELIVERY, STORAGE AND HANDLING

Unit shall be shipped as single package only and is stored and handled per unit manufacturer's recommendations.

WARRANTY (for inclusion by specifying engineer)

U.S. only. Warranty certificate available upon request.

Products

EQUIPMENT

Components shall include: slow-opening two-stage dual fuel gas valve to reduce ignition noise, regulate gas flow, with electric switch gas shut-off; flame proving sensor, hot surface igniter, dual pressure switch assembly, flame rollout switch, ICM blower and two speed inducer assembly, 40va transformer; low-voltage (heating) (heating/cooling) thermostat.

Blower Wheel and ECM Blower Motor

Galvanized blower wheel shall be centrifugal type, statically and dynamically balanced. Blower motor of variable speed ECM type shall be permanently lubricated with sealed ball bearings, of _____hp, and supplies delivers requested airflow CFM as defined by signals received from furnace control. Blower motor shall be direct drive and soft mounted to the blower scroll to reduce variation transmission.

Filters

Furnace may have reusable-type filters. Filter shall be _____ in. (mm) (x) _____in. (mm) An accessory high efficiency Media Filter is available as an option. _____ Media Filter.

Casing

Casing shall be of .030 in. (.76 mm) thickness minimum, pre-painted galvanized steel.

Two Speed Inducer Motor

Two Speed Inducer motor shall be soft mounted to reduce vibration transmission.

Flame Rollout Switch

Flame Rollout Switch shall be factory installed near burner area to further reduce the possibility of a stuck gas valve or failed inducer motor.

Heat Exchangers

Heat exchangers shall be a 4-Pass 20 gage corrosion resistant aluminized steel of fold-and-crimp sectional design when applied operating under negative pressure.

Controls

Control shall include a micro-processor based integrated electronic control board with at least 11 service troubleshooting codes displayed via enhanced flashing LED diagnostic light on the control, a self-test feature that checks all major functions of the furnace within one minute, and a replaceable automotive-type circuit protection fuse. Multiple operational settings available including separate blower speeds for low heat, high heat, low cooling, high cooling and continuous fan. Continuous fan speed may be adjusted from the thermostat. Cooling airflow will be selectable between 350 or 400 CFM per ton of air conditioning. Features will also include temporary reduced airflow in the cooling mode for improved dehumidification when an Infinity™ Control or Thermidistat™ is selected as the thermostat.

OPERATING CHARACTERISTICS

Heating Capacity shall be _____ Btuh input; _____ Btuh output capacity.

Fuel Gas Efficiency shall be 80% AFUE.

Air delivery shall be _____ CFM minimum at 0.50 In. W.C. external static pressure.

Dimensions shall be: depth _____ in. (mm); width _____ in; height_____in. (mm) (casing only). Height shall be_____in. (mm) with A/C coil and _____in. (mm) overall with plenum.

ELECTRICAL REQUIREMENTS

Electrical supply shall be 115 volts, 60 Hz, single-phase (nominal). Minimum wire size shall be_____AWG; maximum fuse size or circuit breaker shall be _____Amps.

SPECIAL FEATURES

Refer to section of the product data sheet identifying accessories and descriptions for specific features and available enhancements.

Copyright 2013 Carrier Corp. ● 7310 W. Morris St. ● Indianapolis, IN 46231

Edition Date: 02/13

Catalog No: 58CV−7PD

Manufacturer reserves the right to change, at any time, specifications and designs without notice and without obligations.

Replaces: 58CV−6PD